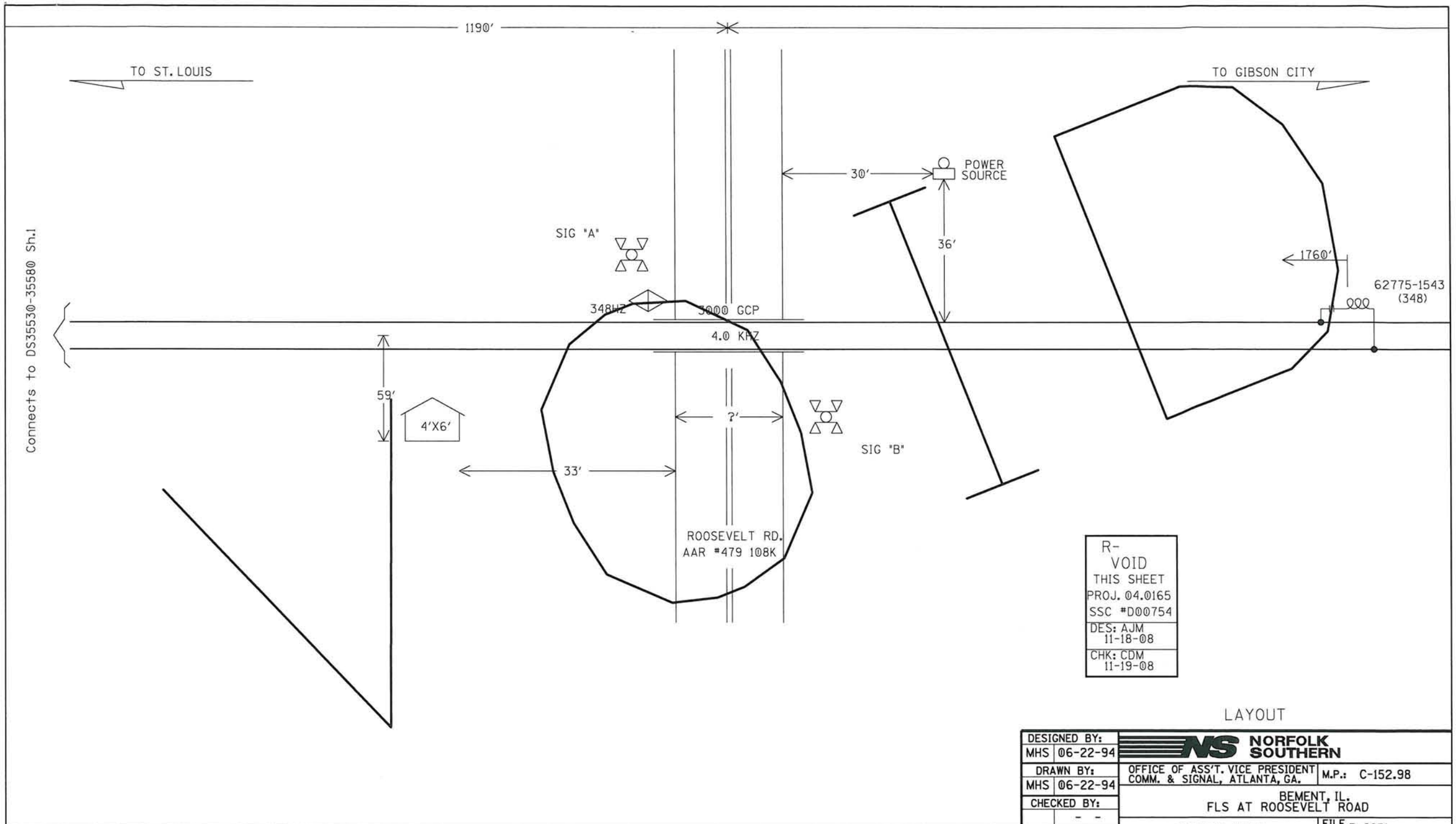

LAYOUT

REVISION INITIALS	07/05/95 MHS	R-1774 MHS 08/23/04	BEL 10/03/05 SWS 11/01/05		

PROPERTY
NORFOLK AND WESTERN RWY. CO.

DESIGNED BY: MHS	06-22-94
DRAWN BY: MHS	06-22-94
CHECKED BY:	- -
IN SERVICE: BEL	07-03-95

NORFOLK SOUTHERN

OFFICE OF ASS'T. VICE PRESIDENT COMM. & SIGNAL, ATLANTA, GA.

M.P.: C-152.98

BEMENT, IL.
FLS AT ROOSEVELT ROAD

CB15240-15290

FILE No. R-9931

CADD and DWG. No. FTLB15298.01

SHEET No. 1 of 10

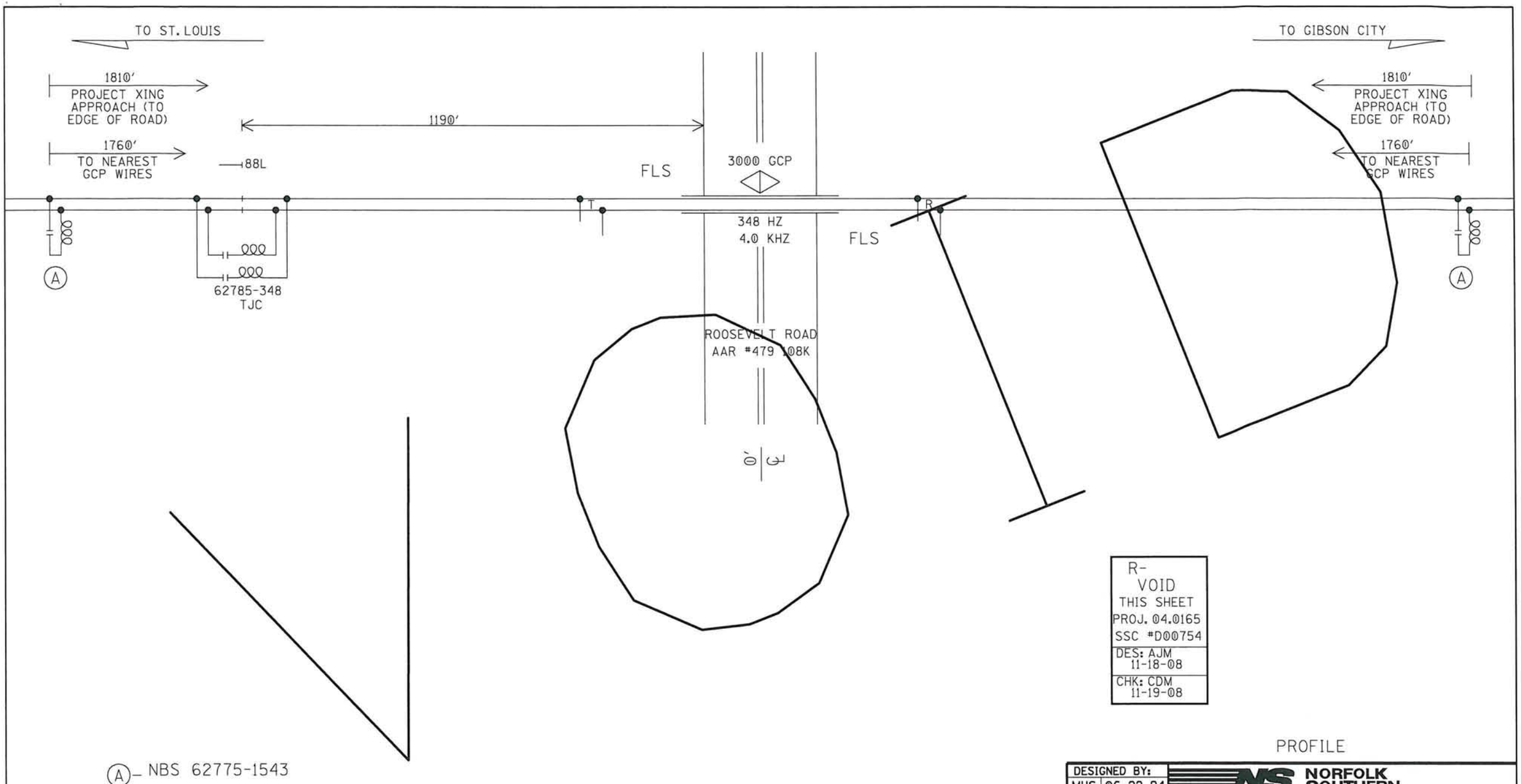

DESIGNED BY: MHS 06-22-94	NORFOLK SOUTHERN		
DRAWN BY: MHS 06-22-94	OFFICE OF ASS'T. VICE PRESIDENT COMM. & SIGNAL, ATLANTA, GA.	M.P.: C-152.98	
CHECKED BY: - -	BEMENT, IL. FLS AT ROOSEVELT ROAD		
IN SERVICE: BEL 07-03-95	CB15240-15290	FILE No. R-9931	
	CADD and DWG. No. FTLB15298.02	SHEET No. 2 of 10	

REVISION INITIALS	R-1774 MHS 08/23/04	BEL 10/03/05 SWS 11/01/05							

PROPERTY
NORFOLK AND WESTERN RWY. CO.

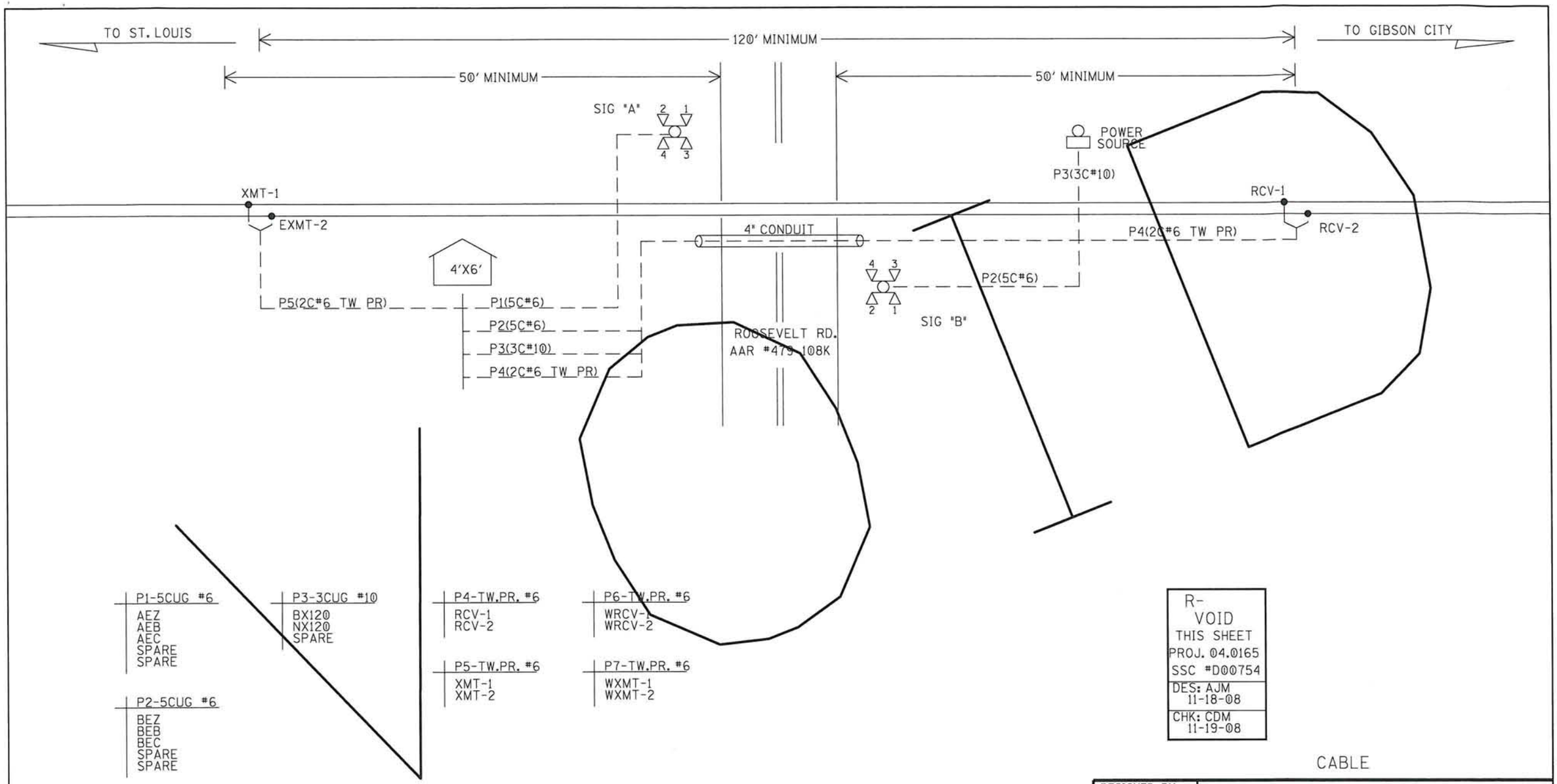

CABLE

DESIGNED BY: MHS 06-22-94	NORFOLK SOUTHERN		
DRAWN BY: MHS 06-22-94	OFFICE OF ASS'T. VICE PRESIDENT COMM. & SIGNAL, ATLANTA, GA.	M.P.: C-152.98	
CHECKED BY: - -	BEMENT, IL. FLS AT ROOSEVELT ROAD		
IN SERVICE: BEL 07-03-95	CB15240-15290	FILE No. R-9931	
	CADD and DWG. No. FTLB15298.03	SHEET No. 3 of 10	

REVISION	07/05/95								
INITIALS	MHS								

PROPERTY
NORFOLK AND WESTERN RWY. CO.

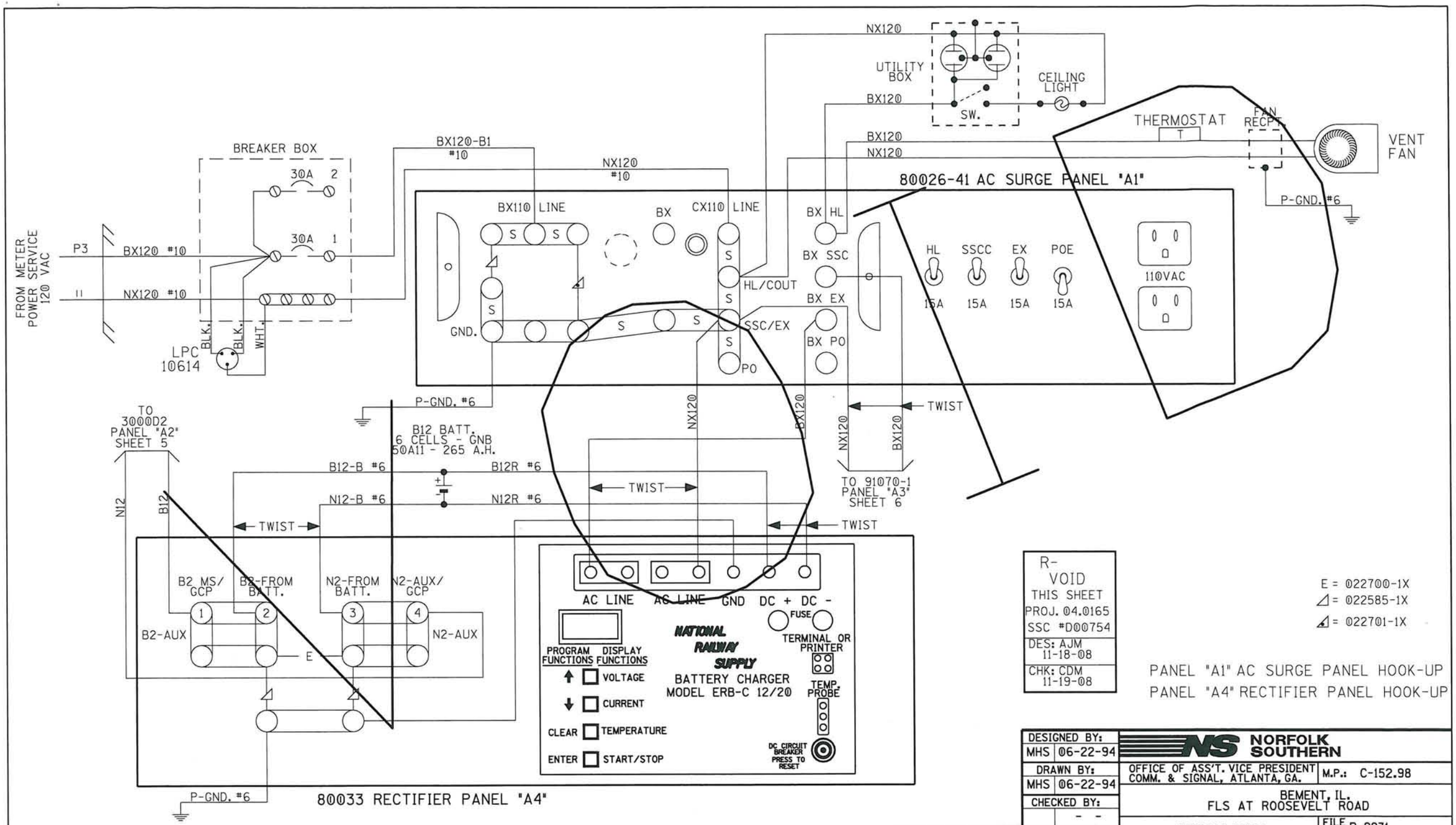

DESIGNED BY: MHS 06-22-94	NORFOLK SOUTHERN		
DRAWN BY: MHS 06-22-94	OFFICE OF ASS'T. VICE PRESIDENT COMM. & SIGNAL, ATLANTA, GA.	M.P.: C-152.98	
CHECKED BY: - -	BEMENT, IL. FLS AT ROOSEVELT ROAD		
IN SERVICE: BEL 07-03-95	CB15240-15290	FILE No. R-9931	
	CADD and DWG. No. FTLB15298.04	SHEET No. 4 of 10	

REVISION INITIALS

PROPERTY
NORFOLK AND WESTERN RWY. CO.

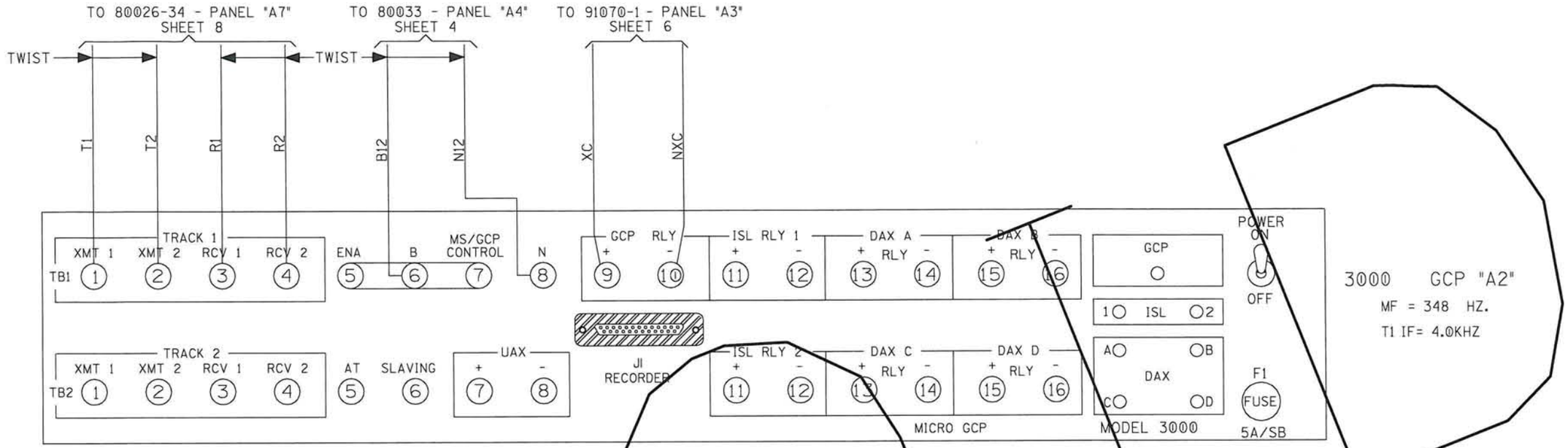

✳ = 1ST SLOT AT LEFT END OF BAY

MODEL 3000 GCP MODULE ASSEMBLIES

MODULES POSITION	M1	M2	M3	M4	M5	M6	M7	M8	M9	M10
MODULE NUMBERS	80011-f(1) ✳	80011-f(2)	80012	80012	80013	80014	80015	80016 (1)	80016 (2)	80020
MODULES USED	X		X	X	X	X				X

R-
VOID
THIS SHEET
PROJ. 04.0165
SSC #D00754
DES: AJM 11-18-08
CHK: CDM 11-19-08

3000 PROGRAMMING

# OF TKS/TRANSCEIVERS	1
BASIC FREQUENCY	348Hz
T1 UNI/BIDIRECTIONAL	UNI
T2 UNI/BIDIRECTIONAL	
T1 POWER-HI/MED	MED
T2 POWER-HI/MED	
T1 PRED/MS	GCP
T2 PRED/MS	
T1 WARNING TIME	30 Sec
T2 WARNING TIME	Sec
T1 APPROACH DIST	1760 Ft
T2 APPROACH DIST	Ft
UAX PU DELAY (UAX1) (0=OFF)	0 Sec
ENA/UAX2 DELAY (0=ENA)	0 Sec
T1 ISL DIST	120 Ft
T2 ISL DIST	Ft

# OF DAX'S	0 Ea
DAX A = T1/T2?	TRACK=
DAX A DIST	Ft
DAX A WARN TIME	Sec
DAX B = T1/T2?	TRACK=
DAX B DIST	Ft
DAX B WARN TIME	Sec
DAX C = T1/T2?	TRACK=
DAX C DIST	Ft
DAX C WARN TIME	Sec
DAX D = T1/T2?	TRACK=
DAX D DIST	Ft
DAX D WARN TIME	Sec
MASTER?/SLAVE?	
PASSWORD NO/YES	
RECORDER NO/YES	

EXPANDED PROGRAMMING

T1-SW TO MS AT 10 % OF EZ	
T2-SW TO MS AT 10 % OF EZ	
T1-DELAY MS TO GCP	Sec
T2-DELAY MS TO GCP	Sec
T1 PRIME PRE. OFFSET	Ft
T2 PRIME PRE. OFFSET	Ft
PRIME PU TIME DELAY 16	Sec
DAX A PU DELAY	Sec
DAX B PU DELAY	Sec
DAX C PU DELAY	Sec
DAX D PU DELAY	Sec

PANEL "A2" 3000 GCP HOOK-UP

DESIGNED BY:	MHS 06-22-94
DRAWN BY:	MHS 06-22-94
CHECKED BY:	- -
IN SERVICE:	BEL 07-03-95

NORFOLK SOUTHERN

OFFICE OF ASS'T. VICE PRESIDENT COMM. & SIGNAL, ATLANTA, GA. M.P.: C-152.98

BEMENT, IL.
FLS AT ROOSEVELT ROAD

CB15240-15290 FILE No. R-9931

CADD and DWG. No. FTLB15298.05 SHEET No. 5 of 10

REVISION INITIALS	R-1774 MHS 08/23/04	BEL 10/03/05 SWS 11/01/05

PROPERTY
NORFOLK AND WESTERN RWY. CO.

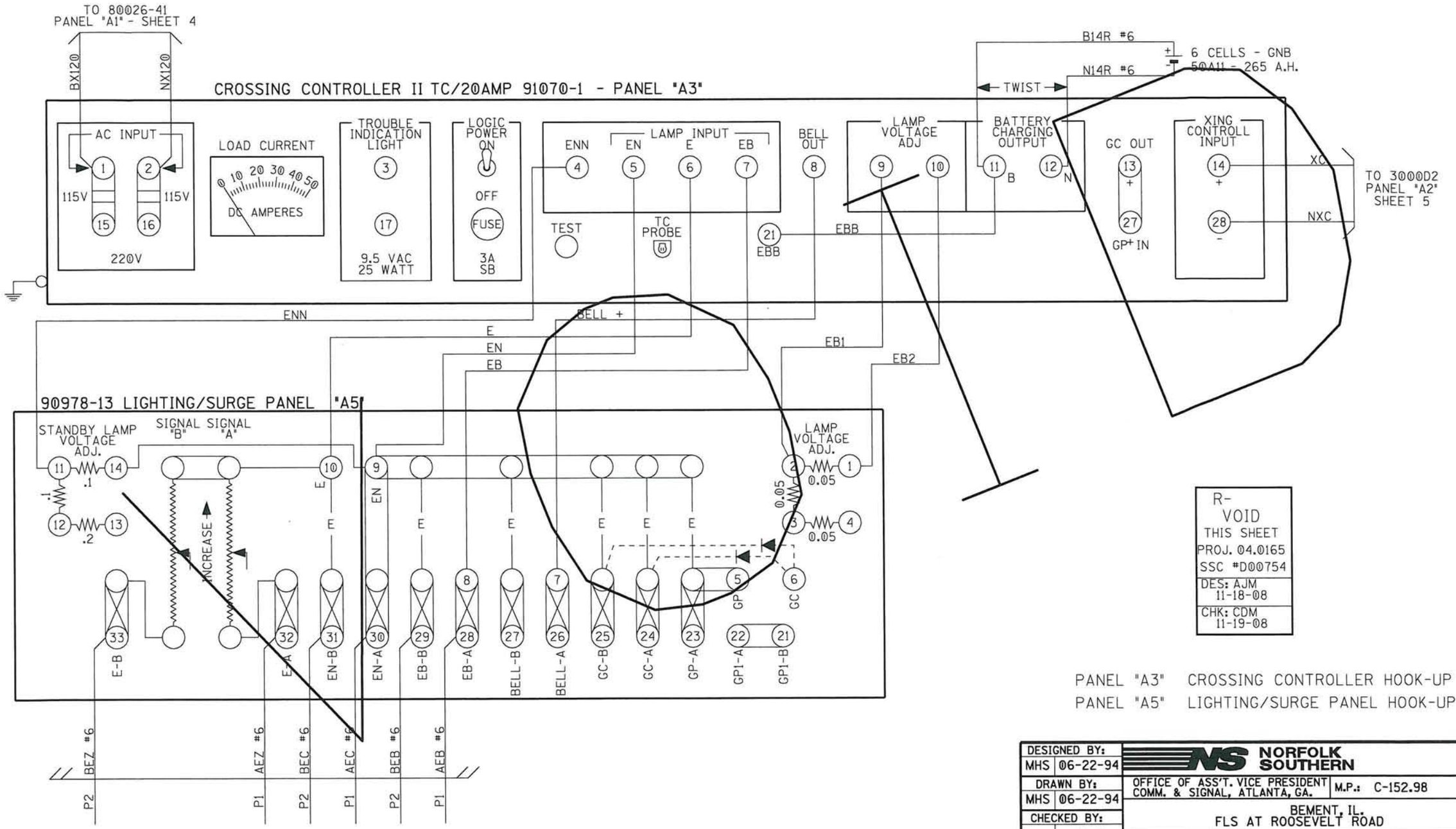

R-
VOID
THIS SHEET
PROJ. 04.0165
SSC #D00754
DES: AJM 11-18-08
CHK: CDM 11-19-08

PANEL "A3" CROSSING CONTROLLER HOOK-UP
PANEL "A5" LIGHTING/SURGE PANEL HOOK-UP

DESIGNED BY: MHS 06-22-94	NORFOLK SOUTHERN		
DRAWN BY: MHS 06-22-94	OFFICE OF ASS'T. VICE PRESIDENT COMM. & SIGNAL, ATLANTA, GA.	M.P.: C-152.98	
CHECKED BY: - -	BEMENT, IL. FLS AT ROOSEVELT ROAD		
IN SERVICE: BEL 07-03-95	CB15240-15290	FILE No. R-9931	
	CADD and DWG. No. FTLB15298.06	SHEET No. 6 of 10	

REVISION INITIALS

PROPERTY
NORFOLK AND WESTERN RWY. CO.

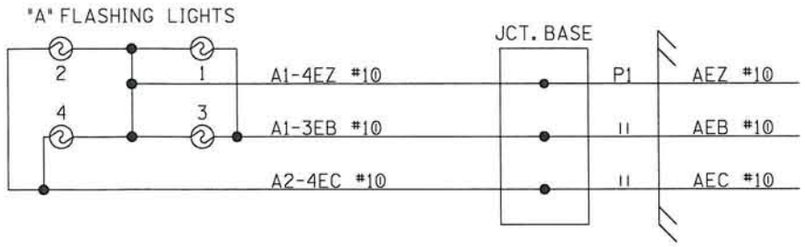

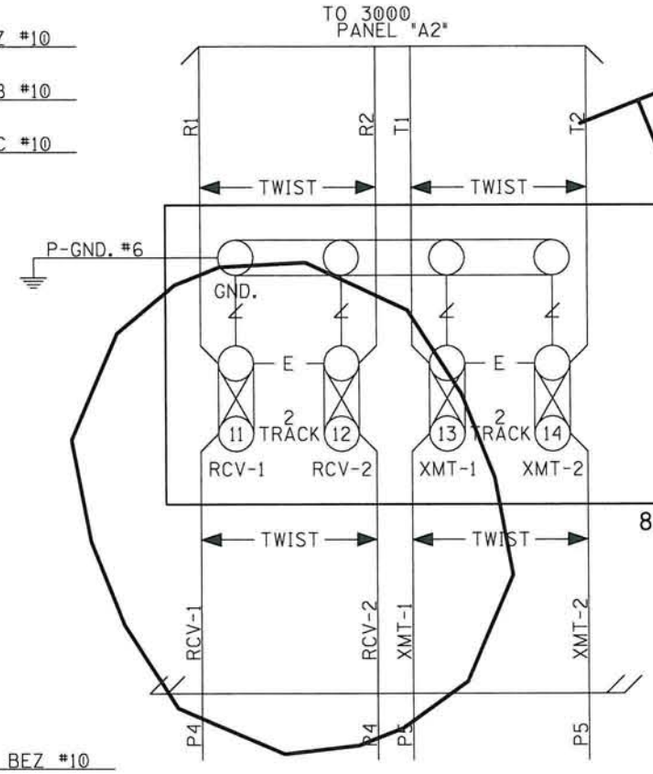

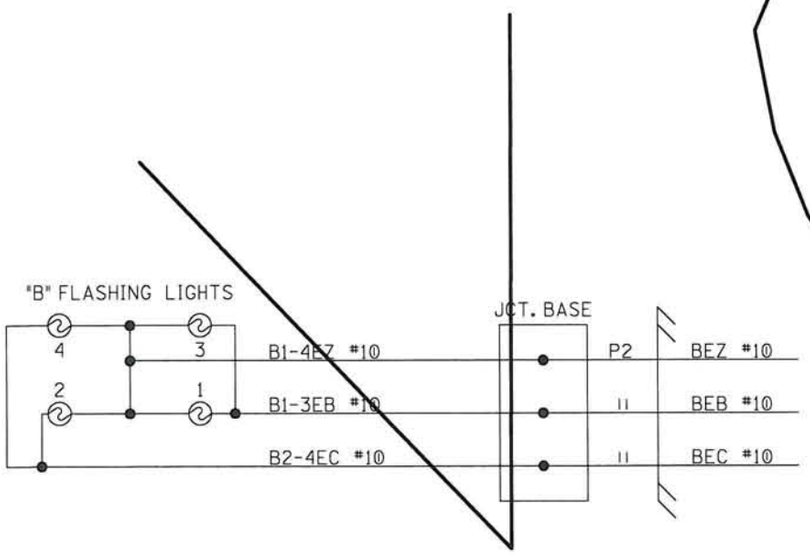

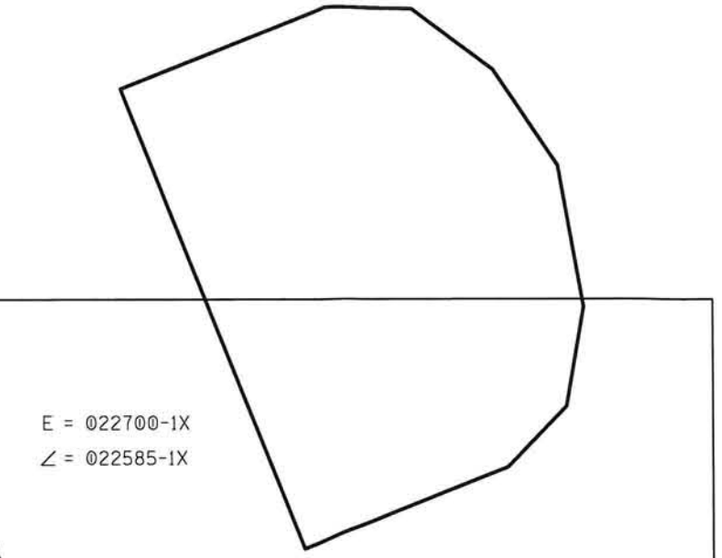

E = 022700-1X

∠ = 022585-1X

80026-34 SURGE-PANEL TRACK

R-
VOID
THIS SHEET
PROJ. 04.0165
SSC #D00754
DES: AJM
11-18-08
CHK: CDM
11-19-08

PANEL "A6" TRACK SURGE PANEL HOOK-UP
FLASHER LIGHTS

DESIGNED BY: MHS 06-22-94	NORFOLK SOUTHERN		
DRAWN BY: MHS 06-22-94	OFFICE OF ASS'T. VICE PRESIDENT COMM. & SIGNAL, ATLANTA, GA.	M.P.: C-152.98	
CHECKED BY: - -	BEMENT, IL. FLS AT ROOSEVELT ROAD		
IN SERVICE: BEL 07-03-95	CB15240-15290	FILE No. R-9931	
	CADD and DWG. No. FTLB15298.07	SHEET No. 7 of 10	

REVISION INITIALS

PROPERTY
NORFOLK AND WESTERN RWY. CO.

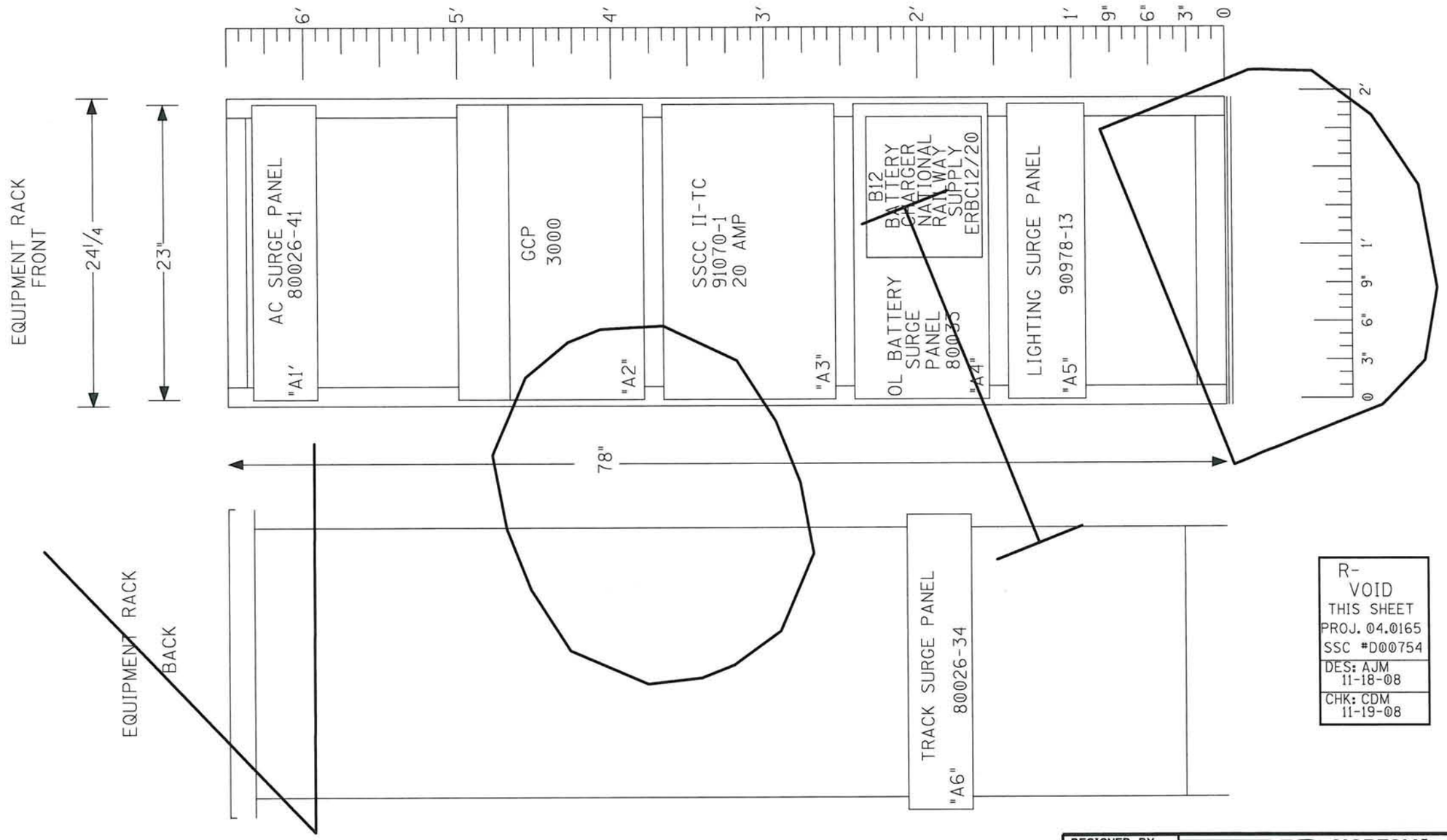

R-
VOID
THIS SHEET
PROJ. 04.0165
SSC #D00754
DES: AJM
11-18-08
CHK: CDM
11-19-08

DESIGNED BY: MHS 06-22-94	NORFOLK SOUTHERN		
DRAWN BY: MHS 06-22-94	OFFICE OF ASS'T. VICE PRESIDENT COMM. & SIGNAL, ATLANTA, GA.	M.P.: C-152.98	
CHECKED BY: - -	BEMENT, IL. FLS AT ROOSEVELT ROAD		
IN SERVICE: BEL 07-03-95	CB15240-15290	FILE No. R-9931	
	CADD and DWG. No. FTLB15298.08	SHEET No. 8 of 10	

REVISION INITIALS

PROPERTY
NORFOLK AND WESTERN RWY. CO.

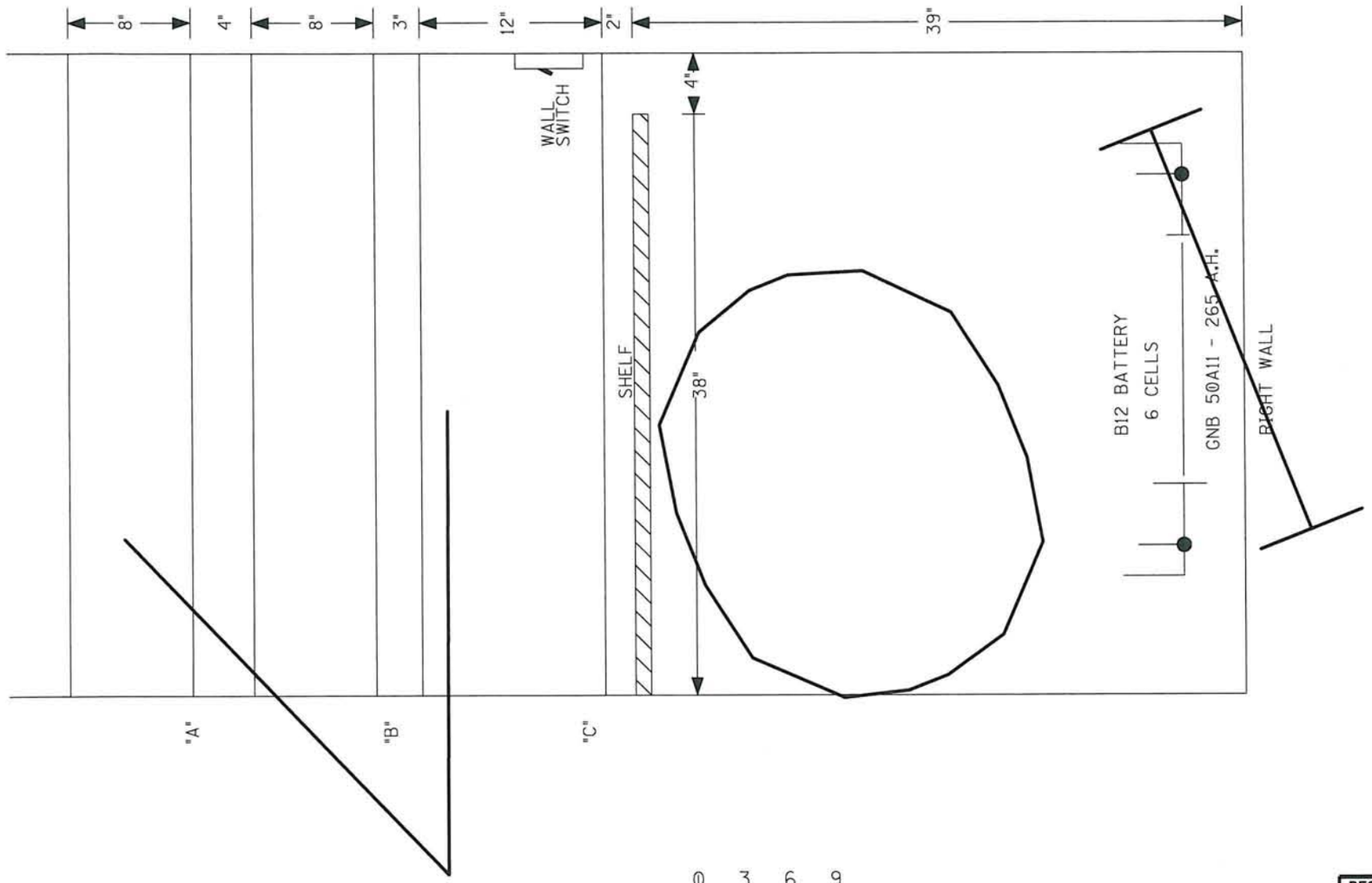

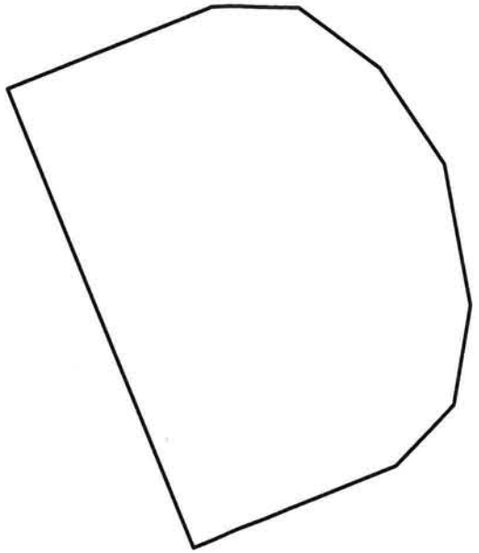

R-
VOID
THIS SHEET
PROJ. 04.0165
SSC #D00754
DES: AJM 11-18-08
CHK: CDM 11-19-08

4' X 6' HOUSE (RIGHT SIDE)

DESIGNED BY: MHS 06-22-94	NORFOLK SOUTHERN		
DRAWN BY: MHS 06-22-94	OFFICE OF ASS'T. VICE PRESIDENT COMM. & SIGNAL, ATLANTA, GA.	M.P.: C-152.98	
CHECKED BY: - -	BEMENT, IL. FLS AT ROOSEVELT ROAD		
IN SERVICE: BEL 07-03-95	CB15240-15290	FILE No. R-9931	
	CADD and DWG. No. FTLB15298.09	SHEET No. 9 of 10	

REVISION INITIALS

PROPERTY
NORFOLK AND WESTERN RWY. CO.

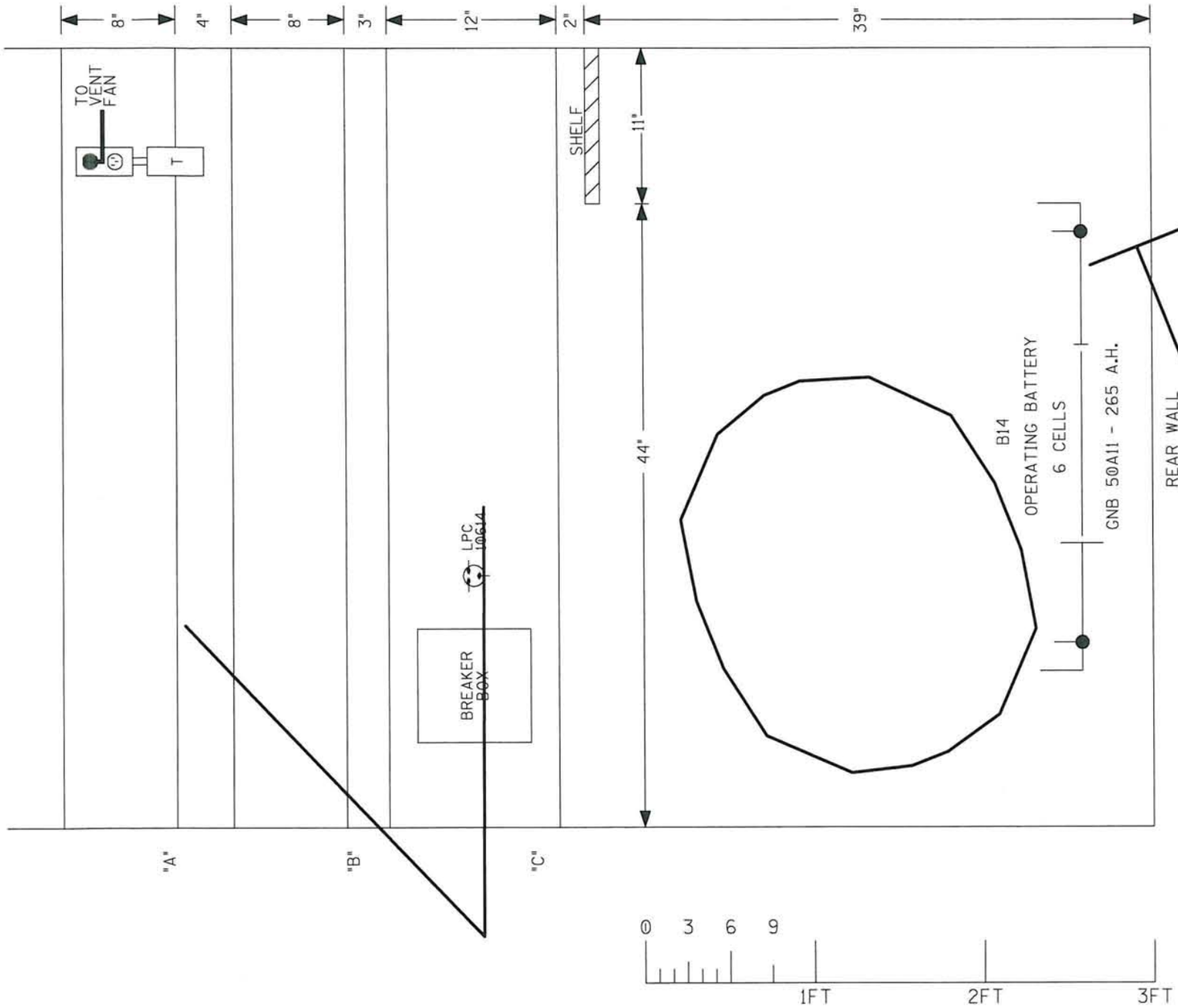

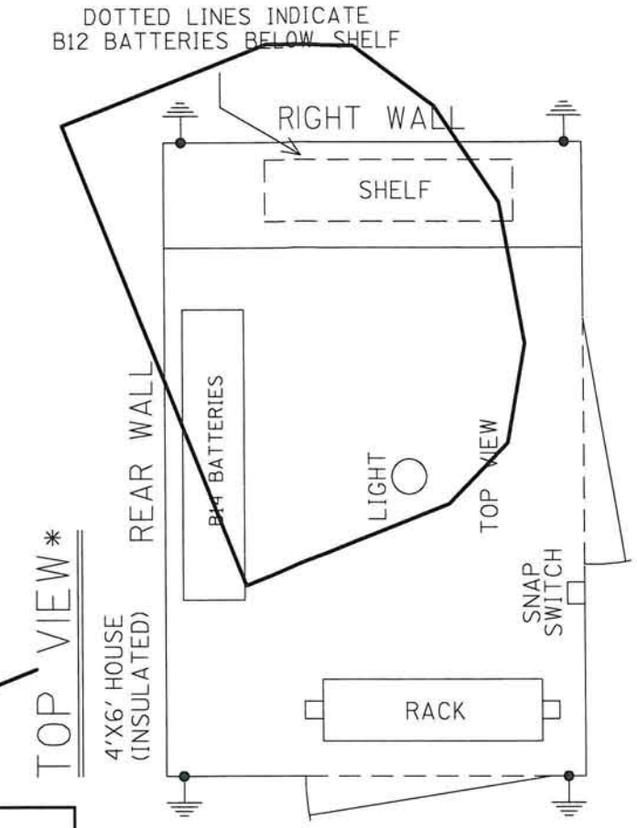

R-
VOID
THIS SHEET
PROJ. 04.0165
SSC #D00754
DES: AJM 11-18-08
CHK: CDM 11-19-08

* - ½ SCALE

4' X 6' HOUSE (REAR & TOP VIEW)

DESIGNED BY: MHS 06-22-94	NORFOLK SOUTHERN		
DRAWN BY: MHS 06-22-94	OFFICE OF ASS'T. VICE PRESIDENT COMM. & SIGNAL, ATLANTA, GA.	M.P.: C-152.98	
CHECKED BY: - -	BEMENT, IL. FLS AT ROOSEVELT ROAD		
IN SERVICE: BEL 07-03-95	CB15240-15290	FILE No. R-9931	
	CADD and DWG. No. FTLB15298.10	SHEET No. 10 of 10	

REVISION INITIALS

PROPERTY
NORFOLK AND WESTERN RWY. CO.