APPROACH LENGTHS ALLOW FOR:	
TIME IN SECONDS	CWT E.B./W.B. APPROACH
STANDARD MUTCD MIN. TIME	20
DESIGNED WARNING TIME	30
EQUIPMENT RESPONSE TIME	5
TOTAL TIME	35
MAX. SPEED (M.P.H.)	50
APPROACH DISTANCE (FEET)	2573

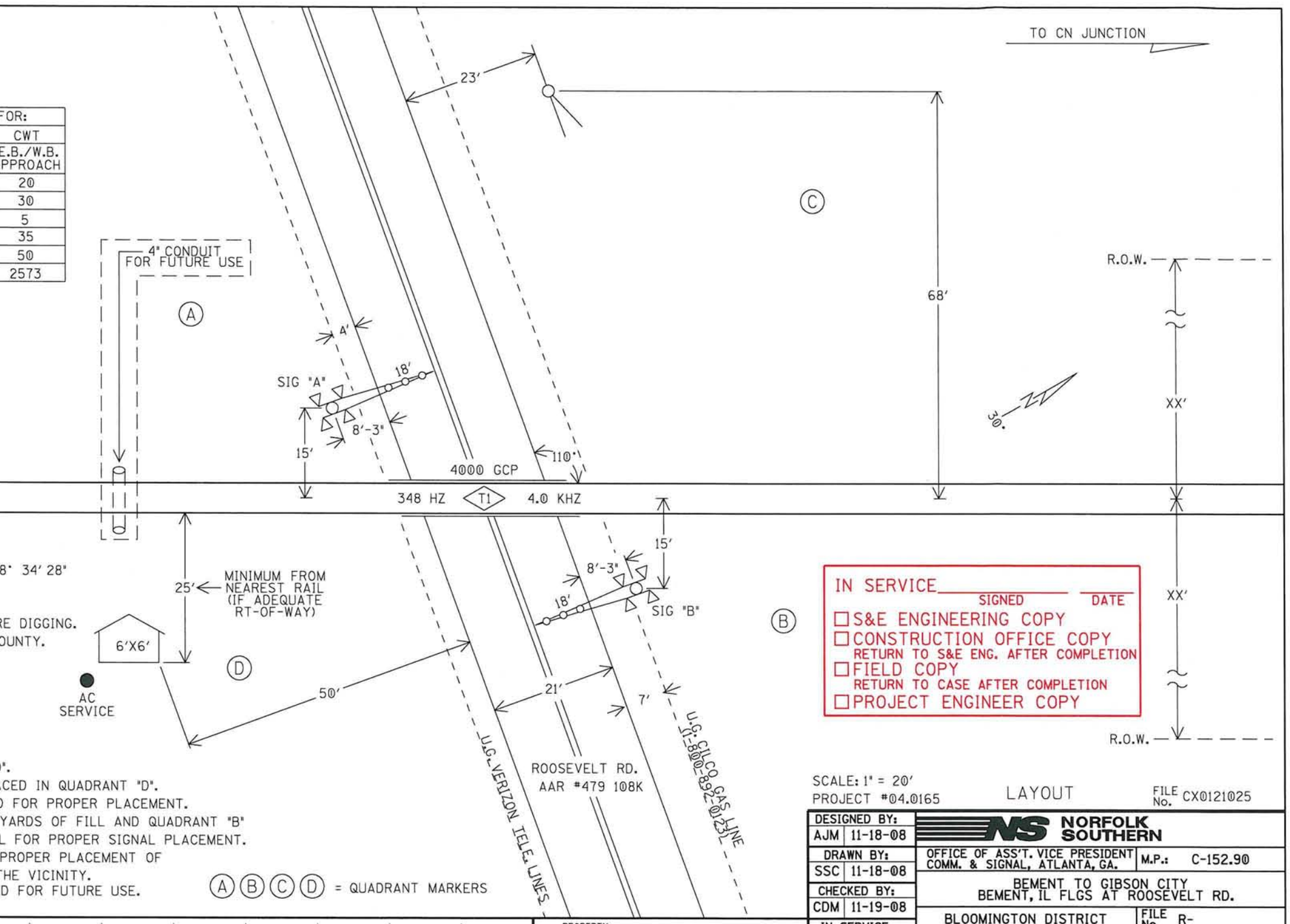

NOTES:

1. MAX. TRAIN SPEED 50 M.P.H.
2. LATITUDE N 39° 55' 13" LONGITUDE W 88° 34' 28" ELEVATION 667'
3. SIGNAL "A" TO HAVE BELL.
4. LOCATE U/G UTILITIES & CABLE BEFORE DIGGING.
5. CROSSING LOCATED IN PIATT COUNTY.
6. NEAREST STREET ADDRESS IS MEADOW ST.
7. NEAREST INTERSECTING STREET IS MEADOW ST.
8. DISTANCE TO NEAREST INTERSECTING STREET IS 150 FT.
9. PLACE THE CONTAINER IN QUADRANT "D".
10. THE NEW 6'x6' SHELTER IS TO BE PLACED IN QUADRANT "D". 40 CUBIC YARDS OF FILL IS REQUIRED FOR PROPER PLACEMENT.
11. QUADRANT "A" WILL REQUIRE 10 CUBIC YARDS OF FILL AND QUADRANT "B" WILL REQUIRE 20 CUBIC YARDS OF FILL FOR PROPER SIGNAL PLACEMENT.
12. HAND DIGGING MAY BE REQUIRED FOR PROPER PLACEMENT OF SIGNAL "B" DUE TO U.G. GAS LINES IN THE VICINITY.
13. TRAFFIC PREEMPTION CIRCUIT INCLUDED FOR FUTURE USE.

(A) (B) (C) (D) = QUADRANT MARKERS

IN SERVICE _____ SIGNED _____ DATE

☐ S&E ENGINEERING COPY
☐ CONSTRUCTION OFFICE COPY
RETURN TO S&E ENG. AFTER COMPLETION
☐ FIELD COPY
RETURN TO CASE AFTER COMPLETION
☐ PROJECT ENGINEER COPY

SCALE: 1" = 20'
PROJECT #04.0165

LAYOUT

FILE No. CX0121025

DESIGNED BY: AJM 11-18-08	NORFOLK SOUTHERN
DRAWN BY: SSC 11-18-08	OFFICE OF ASS'T. VICE PRESIDENT COMM. & SIGNAL, ATLANTA, GA. — M.P.: C-152.90
CHECKED BY: CDM 11-19-08	BEMENT TO GIBSON CITY BEMENT, IL FLGS AT ROOSEVELT RD.
IN SERVICE: - -	BLOOMINGTON DISTRICT — FILE No. R-
	CADD or DWG. No. FTLB15298.01 — SHEET No. 1 of 23

REVISION INITIALS

PROPERTY
NORFOLK SOUTHERN RAILWAY CO.

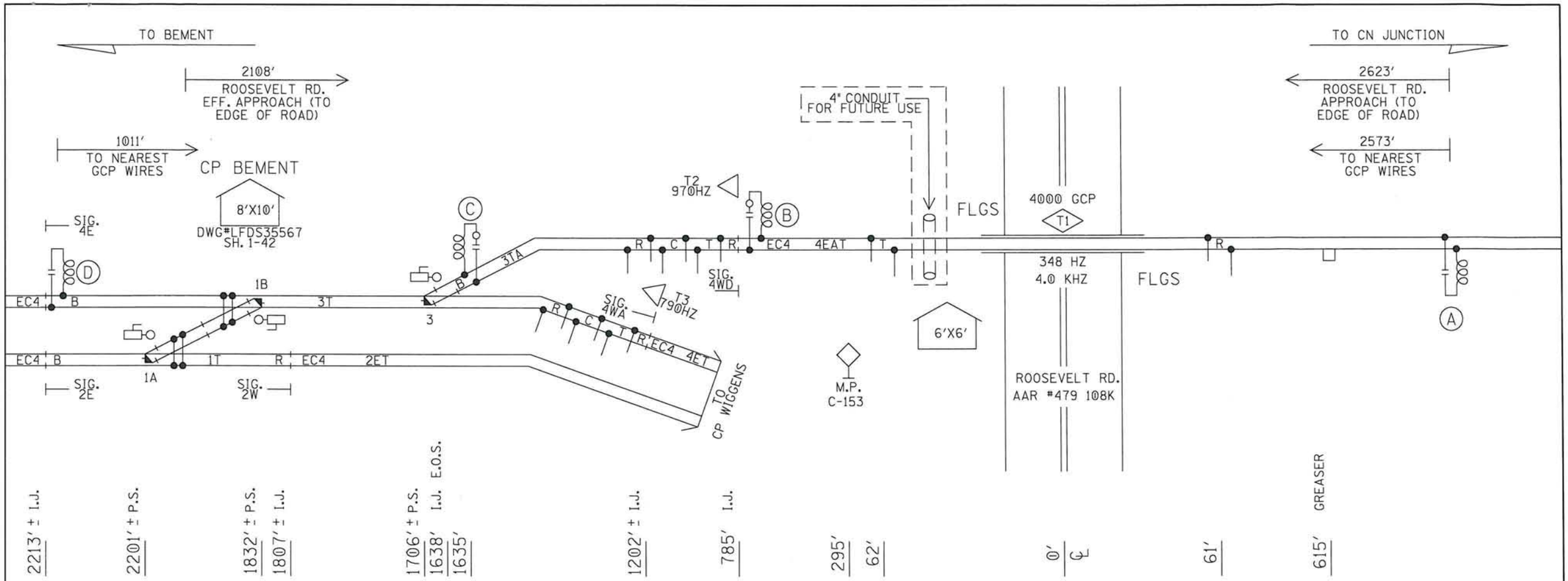

(A)- MF-NBS 62775-1543 (348HZ)

(B) -MF-NBS 62775-1543 (348HZ)
W/INDUCTOR 8V617-1800

(C)- MF-NBS 62775-3497 (970HZ)
W/INDUCTOR 8V617-0200

(D)- MF-NBS 62775-3497 (790HZ)

PLEASE NOTE: CP BEMENT WAS RECENTLY DESIGNED BY SSC.
R-2441 DWG#LFDS35567 DATED 8-15-08.

PROFILE

DESIGNED BY: AJM 11-18-08	NORFOLK SOUTHERN		
DRAWN BY: SSC 11-18-08	OFFICE OF ASS'T. VICE PRESIDENT COMM. & SIGNAL, ATLANTA, GA.	M.P.: C-152.90	
CHECKED BY: CDM 11-19-08	BEMENT TO GIBSON CITY BEMENT, IL FLGS AT ROOSEVELT RD.		
IN SERVICE: - -	BLOOMINGTON DISTRICT	FILE No. R-	
	CADD or DWG. No. FTLB15298.02	SHEET No. 2 of 23	

REVISION INITIALS

PROPERTY
NORFOLK SOUTHERN RAILWAY CO.

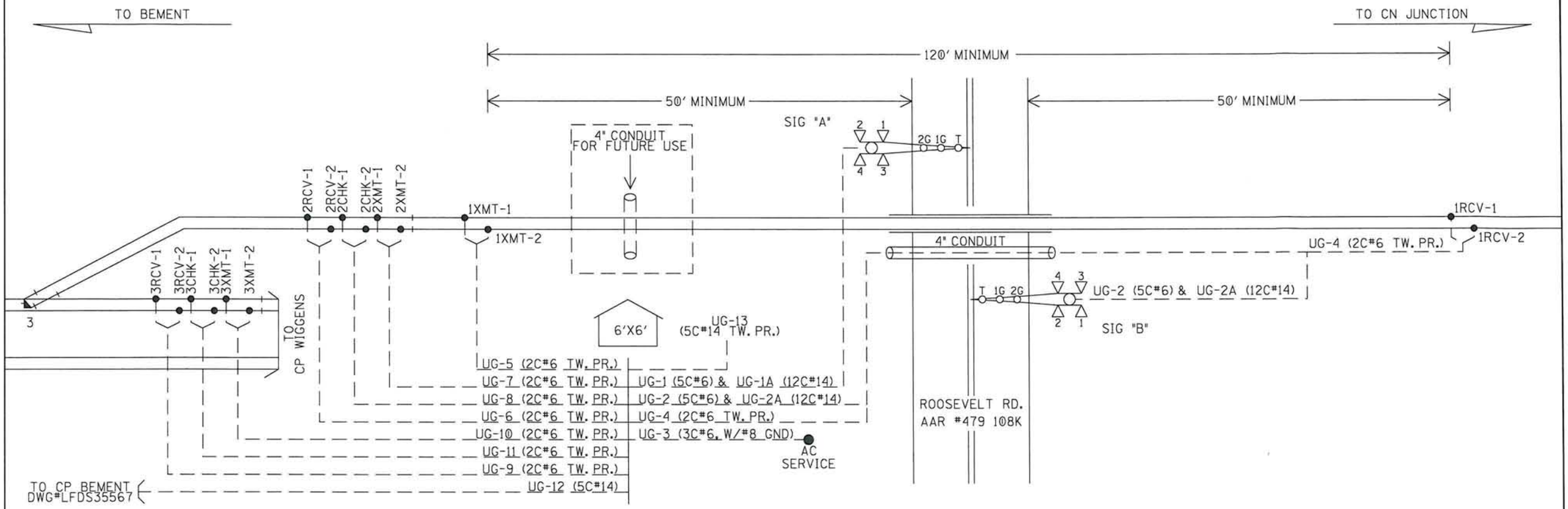

UG-1-5CUG #6
AEC
AEZ
AEB
B16-A
N16-A

UG-2-5CUG #6
BEC
BEZ
BEB
B16-B
N16-B

UG-1A-12CUG #14
AXG
NAXG
AXX
1AXX
XGP1
AMTSS
AGD
AGBX120
AGNX120
SPARE
SPARE
SPARE

UG-2A-12CUG #14
BXG
NBXG
BXX
1BXX
XGP1
XGP
BMTSS
BGD
BGBX120
BGNX120
SPARE
SPARE

UG-3-3CUG #6 W/#8 GND
BX120-A
BX120-B
NX120
GND

UG-4-TW. PR. #6
1RCV-1
1RCV-2

UG-5-TW. PR. #6
1XMT-1
1XMT-2

UG-6-TW. PR. #6
2RCV-1
2RCV-2

UG-7-TW. PR. #6
2XMT-1
2XMT-2

UG-8-TW. PR. #6
2CHK-1
2CHK-2

UG-9-TW. PR. #6
3RCV-1
3RCV-2

UG-10-TW. PR. #6
3XMT-1
3XMT-2

UG-11-TW. PR. #6
3CHK-1
3CHK-2

UG-12-5CUG #14
3NWPP
N3NWPP
SPARE
SPARE
SPARE

UG-13-5CUG #14	
INT1	FOR FUTURE USE
INT2	
SUPV	
SPARE	
SPARE	

CABLE PLAN

DESIGNED BY: AJM 11-18-08	NORFOLK SOUTHERN		
DRAWN BY: SSC 11-18-08	OFFICE OF ASS'T. VICE PRESIDENT COMM. & SIGNAL, ATLANTA, GA.	M.P.:	C-152.90
CHECKED BY: CDM 11-19-08	BEMENT TO GIBSON CITY BEMENT, IL FLGS AT ROOSEVELT RD.		
IN SERVICE: - -	BLOOMINGTON DISTRICT	FILE No.	R-
	CADD or DWG. No. FTLB15298.03	SHEET No.	3 of 23

REVISION INITIALS

PROPERTY
NORFOLK SOUTHERN RAILWAY CO.

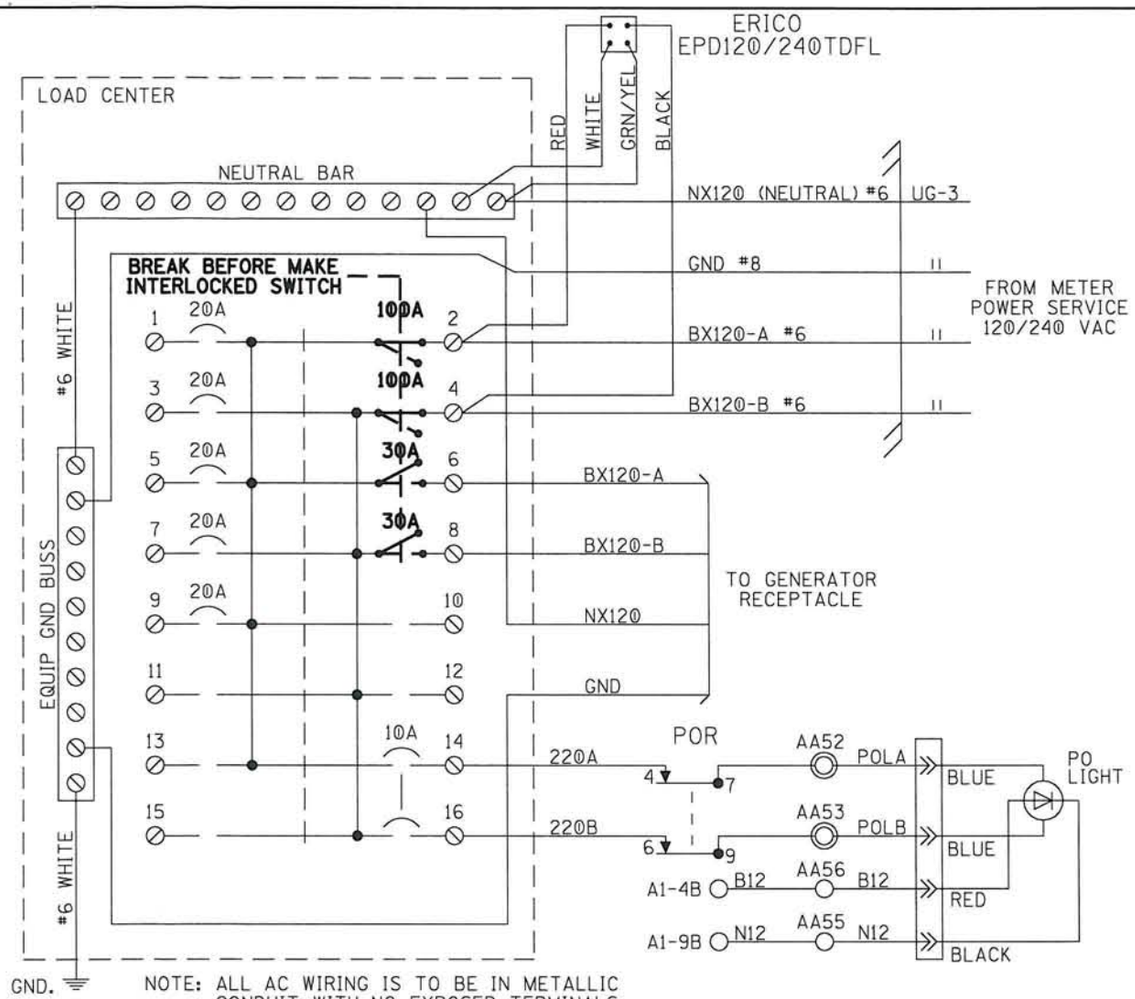

NOTE: ALL AC WIRING IS TO BE IN METALLIC CONDUIT WITH NO EXPOSED TERMINALS. ALL AC 120V AND 240V EQUIPMENT IS TO BE PROPERLY GROUNDED.

SQUARE "D" PART NUMBERS:

LOAD CENTER——Q0116L125G
10A 1P CIR BKR——Q0110
10A 2P CIR BKR——Q0210
20A 1P CIR BKR——Q0120
30A 1P CIR BKR——Q0130
30A 2P CIR BKR——Q0230
60A 2P CIR BKR——Q0260
100A 2P CIR BKR——Q02100
MECH INTERLOCK——PK4DTIM4LA

GENERATOR RECEPTACLE:
MALE CONNECTOR - NEMA L1430-FI

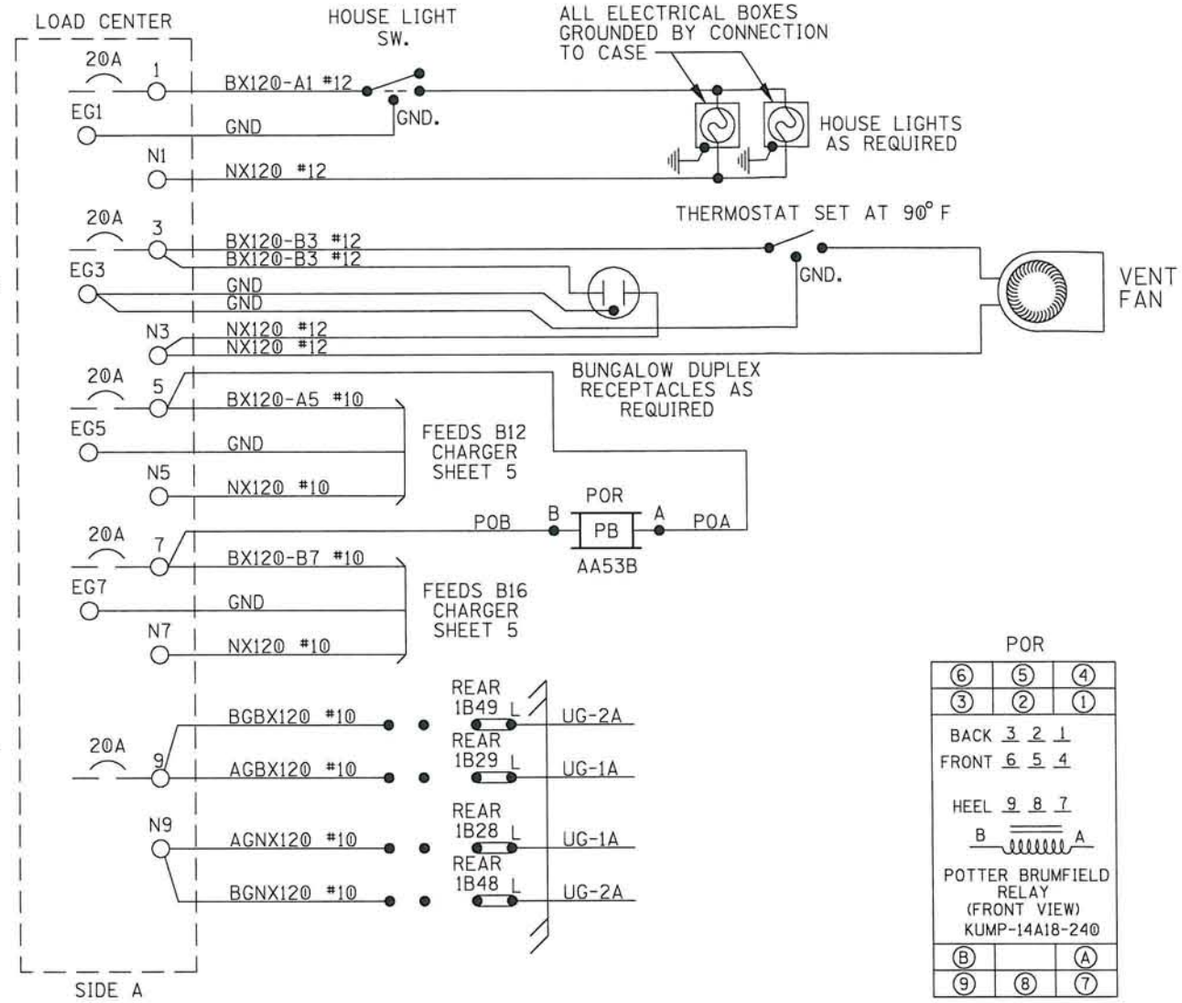

LOAD CENTER WIRING

DESIGNED BY: AJM 11-18-08	NORFOLK SOUTHERN		
DRAWN BY: SSC 11-18-08	OFFICE OF ASS'T. VICE PRESIDENT COMM. & SIGNAL, ATLANTA, GA.	M.P.: C-152.90	
CHECKED BY: CDM 11-19-08	BEMENT TO GIBSON CITY BEMENT, IL FLGS AT ROOSEVELT RD.		
IN SERVICE: - -	BLOOMINGTON DISTRICT	FILE No. R-	
	CADD or DWG. No. FTLB15298.04	SHEET No. 4 of 23	

REVISION INITIALS

PROPERTY
NORFOLK SOUTHERN RAILWAY CO.

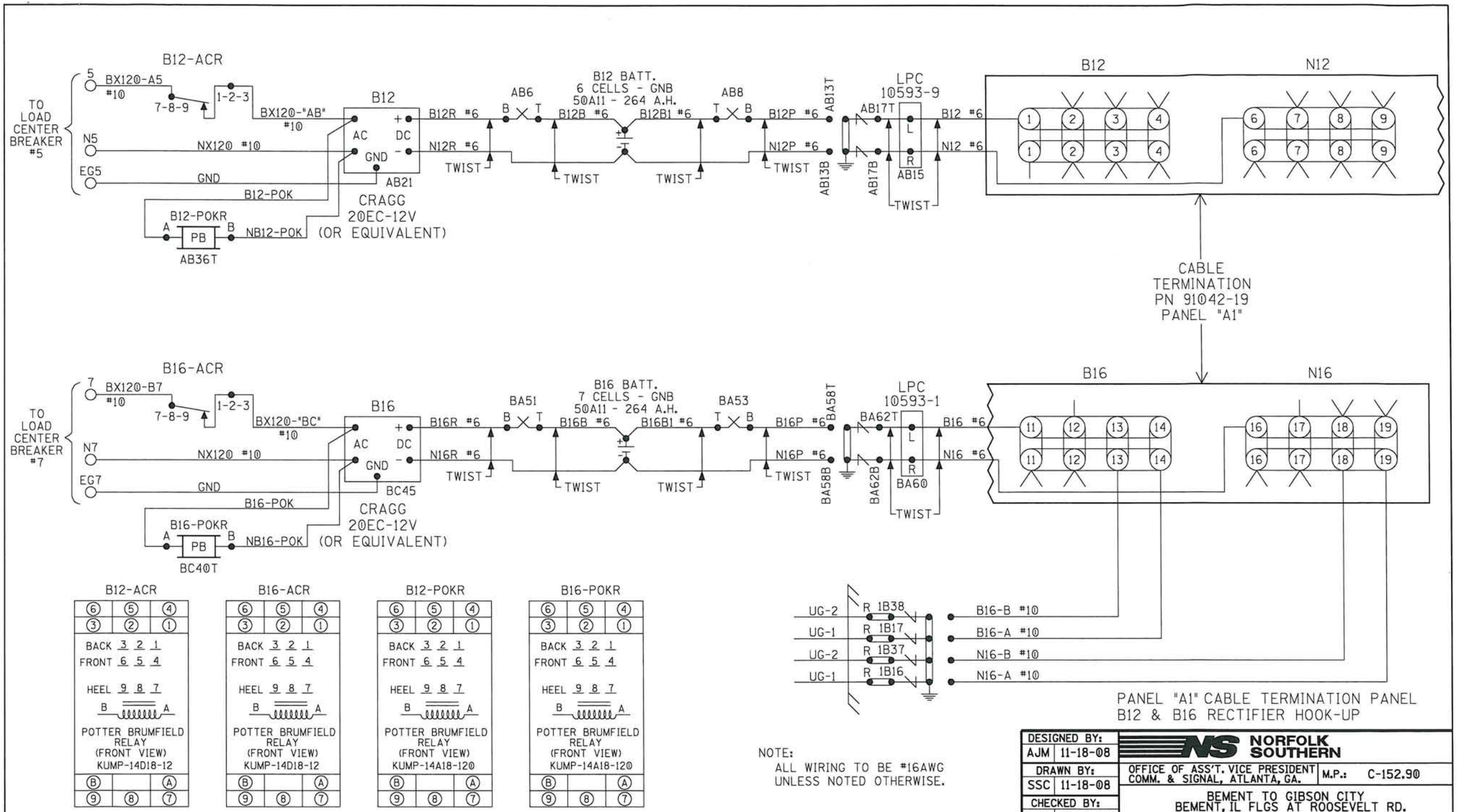

PANEL "A1" CABLE TERMINATION PANEL
B12 & B16 RECTIFIER HOOK-UP

NOTE:
ALL WIRING TO BE #16AWG
UNLESS NOTED OTHERWISE.

DESIGNED BY: AJM 11-18-08	NORFOLK SOUTHERN	
DRAWN BY: SSC 11-18-08	OFFICE OF ASS'T. VICE PRESIDENT COMM. & SIGNAL, ATLANTA, GA.	M.P.: C-152.90
CHECKED BY: CDM 11-19-08	BEMENT TO GIBSON CITY BEMENT, IL FLGS AT ROOSEVELT RD.	
IN SERVICE: - -	BLOOMINGTON DISTRICT	FILE No. R-
	CADD or DWG. No. FTLB15298.05	SHEET No. 5 of 23

REVISION INITIALS

PROPERTY
NORFOLK SOUTHERN RAILWAY CO.

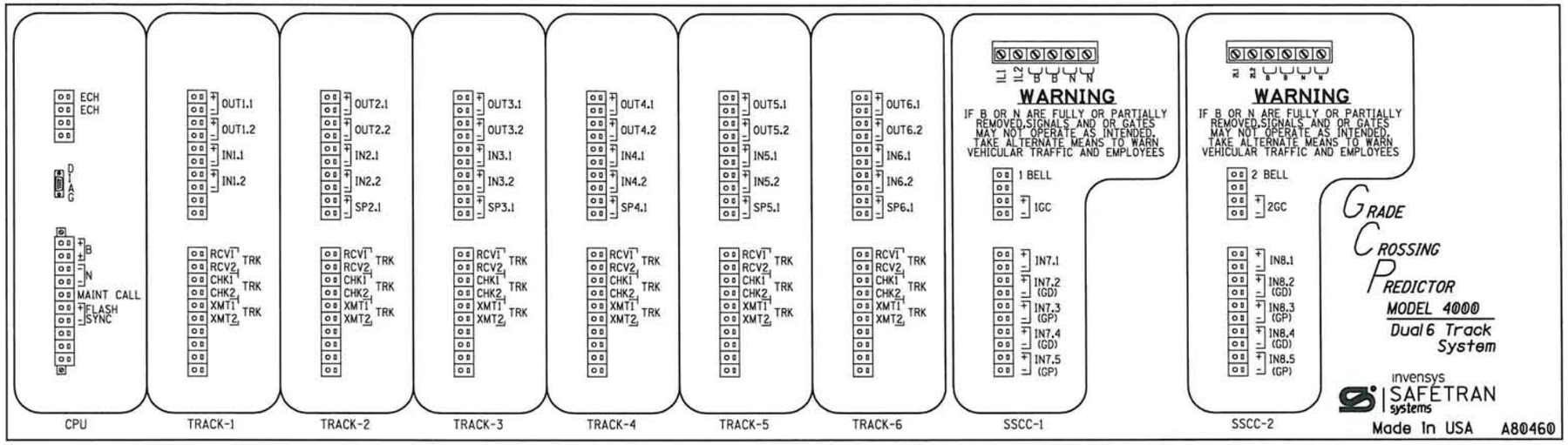

WARNING

REMOVAL OF THE SSCCIIII MODULE WILL CAUSE THE GATE(S) TO DROP BUT THE LIGHTS WILL NOT ACTIVATE

CAUTION

ASSURE CORRECT POLARITY OF THE SSCCIIII MODULE OR SEVERE DAMAGE WILL OCCUR.

ATTENTION!

ENSURE THE DISPLAY MODULE HEATER IS DISABLED. LEAVING THE DISPLAY HEATER ENABLED WILL REDUCE THE AMOUNT OF BATTERY STANDBY TIME IN THE EVENT OF AN AC POWER FAILURE.

HEATER FUNCTION IS JUMPER SELECTABLE ON THE DISPLAY MODULE BOARD.
THREE OPTIONS ARE AVAILABLE:
NORMAL LCD HTR (DEFAULT)
HI CURRENT
NO JUMPER (HEATER DISABLED)

*= MAIN AND STANDBY MAY USE RIO IN TRACKS 2, 5, AND 6 SLOTS (M3, M6, AND M7)

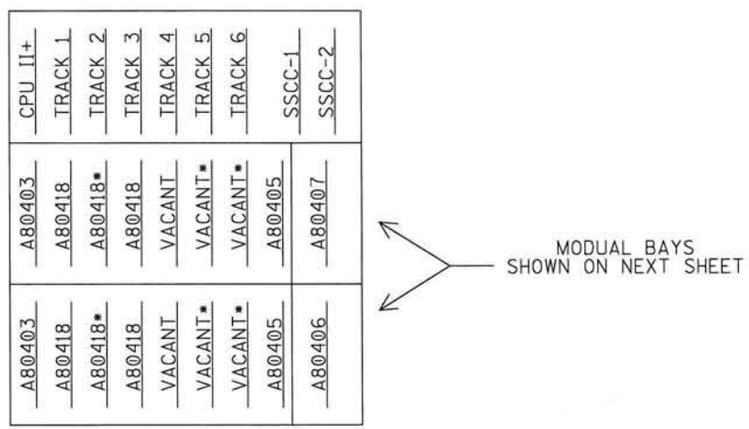

PANEL "A2" 4000 GCP REDUNDANT
6-TK CHASSIS AND I/O LAYOUT

DESIGNED BY: AJM 11-18-08	NORFOLK SOUTHERN		
DRAWN BY: SSC 11-18-08	OFFICE OF ASS'T. VICE PRESIDENT COMM. & SIGNAL, ATLANTA, GA.	M.P.: C-152.90	
CHECKED BY: CDM 11-19-08	BEMENT TO GIBSON CITY BEMENT, IL FLGS AT ROOSEVELT RD.		
IN SERVICE: - -	BLOOMINGTON DISTRICT	FILE No. R-	
	CADD or DWG. No. FTLB15298.06	SHEET No. 6 of 23	

REVISION INITIALS											

PROPERTY
NORFOLK SOUTHERN RAILWAY CO.

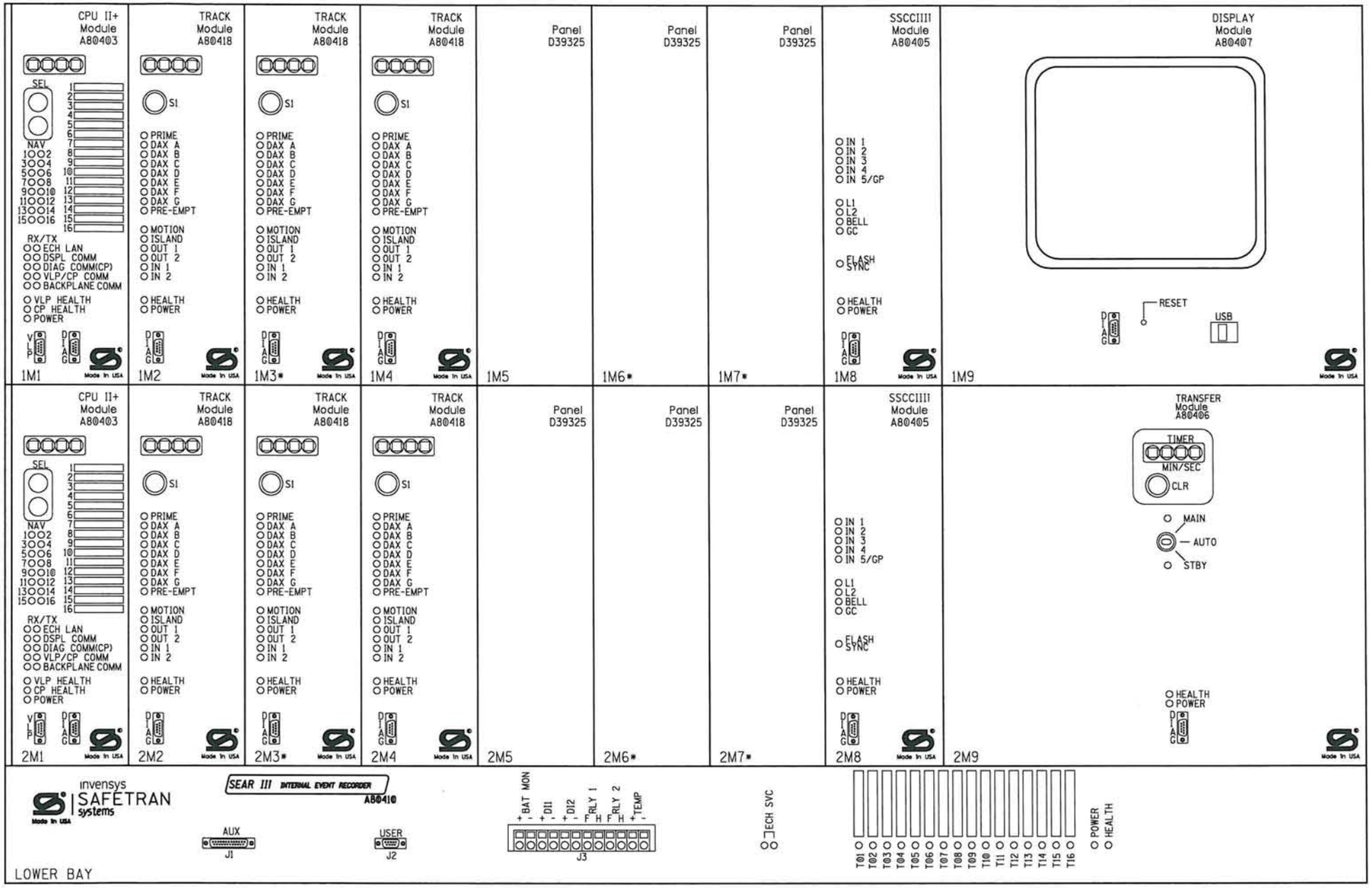

WARNING

REMOVAL OF THE SSCCIIII MODULE WILL CAUSE THE GATE(S) TO DROP BUT THE LIGHTS WILL NOT ACTIVATE

CAUTION

ASSURE CORRECT POLARITY OF THE SSCCIIII MODULE OR SEVERE DAMAGE WILL OCCUR.

ATTENTION!

ENSURE THE DISPLAY MODULE HEATER IS DISABLED. LEAVING THE DISPLAY HEATER ENABLED WILL REDUCE THE AMOUNT OF BATTERY STANDBY TIME IN THE EVENT OF AN AC POWER FAILURE.

HEATER FUNCTION IS JUMPER SELECTABLE ON THE DISPLAY MODULE BOARD.
THREE OPTIONS ARE AVAILABLE:
NORMAL LCD HTR (DEFAULT)
HI CURRENT
NO JUMPER (HEATER DISABLED)

*= MAIN AND STANDBY MAY USE RIO IN TRACKS 2, 5, AND 6 SLOTS (M3, M6, AND M7)

PANEL "A2" 4000 GCP REDUNDANT
6-TK CHASSIS AND MODULE LAYOUT

DESIGNED BY: AJM 11-18-08	NORFOLK SOUTHERN
DRAWN BY: SSC 11-18-08	OFFICE OF ASS'T. VICE PRESIDENT COMM. & SIGNAL, ATLANTA, GA. — M.P.: C-152.90
CHECKED BY: CDM 11-19-08	BEMENT TO GIBSON CITY BEMENT, IL FLGS AT ROOSEVELT RD.
IN SERVICE: - -	BLOOMINGTON DISTRICT — FILE No. R-
	CADD or DWG. No. FTLB15298.07 — SHEET No. 7 of 23

REVISION INITIALS

PROPERTY
NORFOLK SOUTHERN RAILWAY CO.

Minimum Program Steps Report

Location and SIN

DOT Number: 479108K
Milepost Number: C-152.90
Site Name: ROOSEVELT RD

SIN: 755053601316 *

* Parameter is part of office check number calculation.

MCF and Template Selection

MCF Name: GCP-T6X-02-1.mcf
MCF Revision: 021
MCFCRC: 6076E435

Template = 2C:2 BI, 4 Rem *

* Parameter is part of office check number calculation.

Minimum Program Steps

TEMPLATE: preemption
Preempt Logic = Simult *

TEMPLATE: track 1-BI, Island
Track 1 : GCP Frequency = 348 Hz
Track 1 : Approach Distance = 2573 ft
Track 1 : Prime Warning Time = 30 sec
Track 1 : GCP Transmit Level = Medium (Set in Field)
Track 1 : IslFrequency = 4.0 kHz

TEMPLATE: track 2-Remote Prime
Track 2 : GCP Frequency = 970 Hz
Track 2 : Approach Distance = 853 ft
Track 2 : Prime Warning Time = 30 sec
Track 2 : Prime Offset Distance = 723 ft
Track 2 : GCP Transmit Level = Medium (Set in Field)

TEMPLATE: track 3-Remote Prime
Track 3 : GCP Frequency = 790 Hz
Track 3 : Approach Distance = 1011 ft
Track 3 : Prime Warning Time = 30 sec
Track 3 : Prime Offset Distance = 1140 ft
Track 3 : GCP Transmit Level = Medium (Set in Field)

TEMPLATE: AND 1 XR
AND 1 Enable Used = Yes *

TEMPLATE: SSCC
SSCC 1 : Lamp Neutral Test = On
SSCC 2 : Lamp Neutral Test = On

TEMPLATE: OOS
OOS Control = Display+OOS IPs *
T2 OOS Control = OOS Input 1 *
T3 OOS Control = OOS Input 1 *

TEMPLATE: OP assignment 1
OUT 1.1 = Sim Preempt *

TEMPLATE: IP assignment 1
IN 1.1 = Preempt Health *
IN 3.1 = T3 Wrap *

TEMPLATE: IP assignment SSCC
IN 7.3 = AND 1 XR Enable *
IN 8.2 = Out Of Service IP 1 *

GCP: track 1
Track 1 : Island Distance = 123 ft *

GCP: track 1 enhanced det
Track 1 : Inbound PS Sensitivity = Off *

GCP: track 2 enhanced det
Track 2 : Inbound PS Sensitivity = Off *

GCP: track 3 enhanced det
Track 3 : Inbound PS Sensitivity = Off *

ADVANCED: track wrap circuits
Track 3 Wrap Used = Yes *

ADVANCED: site options
Daylight Savings = On *

SSCC: 1
SSCC 1 : Flash Rate = 40 *

SSCC: 2
SSCC 2 : Flash Rate = 40 *

SEAR
SEAR Subnode = 3 *
DT 1 = Gnd Flt Tester 1 *
Rly 1 = Ground Fault Test *
Rly 2 = AC Control *

SEAR: slot 7-8 inputs
IN 7.1 = TSS 1 *
IN 8.1 = TSS 2 *
IN 8.3 = POK 2 *

* Parameter is part of office check number calculation.

Check Numbers

Office Check No. (DT 4.6.0): 6B109A77
Office Check Number: 6B109A77
Config. Check Number: 420ADA4E
(Based on MCF Revision 021)

Parameters not part of office check number calculation:

Track 1 : GCP Frequency = 348 Hz
Track 1 : Approach Distance = 2573 ft
Track 1 : Prime Warning Time = 30 sec
Track 1 : GCP Transmit Level = Medium (Set in Field)
Track 1 : IslFrequency = 4.0 kHz
Track 2 : GCP Frequency = 970 Hz
Track 2 : Approach Distance = 853 ft
Track 2 : Prime Warning Time = 30 sec
Track 2 : Prime Offset Distance = 723 ft
Track 2 : GCP Transmit Level = Medium (Set in Field)
Track 3 : GCP Frequency = 790 Hz
Track 3 : Approach Distance = 1011 ft
Track 3 : Prime Warning Time = 30 sec
Track 3 : Prime Offset Distance = 1140 ft
Track 3 : GCP Transmit Level = Medium (Set in Field)
SSCC 1 : Lamp Neutral Test = On
SSCC 2 : Lamp Neutral Test = On

Comments

<none>

Configuration Package File

Filename: FTLB15298-479108K.pac

4000 GCP PROGRAMMING SETUP

DESIGNED BY: AJM 11-18-08	NORFOLK SOUTHERN		
DRAWN BY: SSC 11-18-08	OFFICE OF ASS'T. VICE PRESIDENT COMM. & SIGNAL, ATLANTA, GA.	M.P.: C-152.90	
CHECKED BY: CDM 11-19-08	BEMENT TO GIBSON CITY BEMENT, IL FLGS AT ROOSEVELT RD.		
IN SERVICE: - -	BLOOMINGTON DISTRICT	FILE No. R-	
	CADD or DWG. No. FTLB15298.08	SHEET No. 8 of 23	

REVISION INITIALS

PROPERTY
NORFOLK SOUTHERN RAILWAY CO.