INDEX

SH. NO.	CONTENTS	REVISION NO. 1	2	3	4	5	6
1	TITLE, NOTES, INDEX AND REVISIONS	✓	✓	✓			
2	LOCATION PLAN	✓	✓	✓			
3	POWER DISTRIBUTION	✓		✓			
4	HIGHWAY CROSSING MOTION SENSOR CIRCUITS	✓					
5	GATE CONTROL, LIGHTING CIRCUITS AND CABLE TERMINATIONS	✓	✓	✓			
6	GATE MECHANISMS TYPICAL	✓	✓				
7	RELAY RACK AND CONNECTIONS - HOUSE LAYOUT	✓					
8	SHELF ARRANGEMENT	✓		✓			
9	TERMINAL BOARD	✓		✓			
10							

4	CROSSING DETECTION CIRCUITRY			✓			
4A	DETECTION DEVICE PROGRAM			✓			

6	CROSSING WARNING DEVICE GATE CIRCUITRY			✓			
6A	CROSSING WARNING DEVICE LIGHT CIRCUITRY			✓			

NOTES

⌋ =FOR MATERIAL REFERENCE SEE PLAN
⊗ =DENOTES TWISTED PAIR GROUND IN ACCORDANCE WITH CS-9001-A

REVISIONS

NEW PLAN DRAWN ACCOUNT WARNING DEVICES TO BE ADDED AT CENTRAL AVENUE. EXISTING PLAN 8405-0906 REV.4 VOID

SYSTEM FILE NO: H5497
WO/AFE NO: 48606
IN SERVICE:
PER:

2 01 10-07 KSP|ERP|SAF

NEW PLAN ACCOUNT
12" LENS UPGRADE TO LED LIGHT ARRAYS.

PROJECT. IL2006050
OP/AFE#. IL0203
IN SERVICE. 11-01-07
PER.
REVISED. 03-28 08 CREATED VECTOR

SMV|SAF

3 10-03-08 SWE|CDT|TMJ

PLAN REVISED ACCOUNT OF
UPGRADE TO PMD 3R &
GATE MECHS.

CSX PROJECT. IL2008033
OP/AKE NO. IL0259
IN SERVICE.
PER.

CP 72 TO END OF CSX TRACK

CSX TRANSPORTATION
RAIL TRANSPORT GROUP ENGINEERING
COMMUNICATIONS AND SIGNALS

ST. MARYS TO END OF TRACK
CENTRAL STREET (541365C)
TITLE, NOTES, INDEX AND REVISIONS
PARIS, IL M.P. 90.66 (0.050 90.66)

REV.3
IN

CX0021993 IL2008033
10-03-08 SWE/CDT/TMJ

Southwest Signal Engineering Co.

DESIGNED	DIGITIZED	CHECKED	DATE
SAF-KSP	SAF-SMV	SAF-DLK	01-10-86

DRAWING	SHEET NO	NEXT SH	NEXT FILE	NEXT SH	FILE	SHEET
8405-0906	1	2	05003066	S01	05009066	01

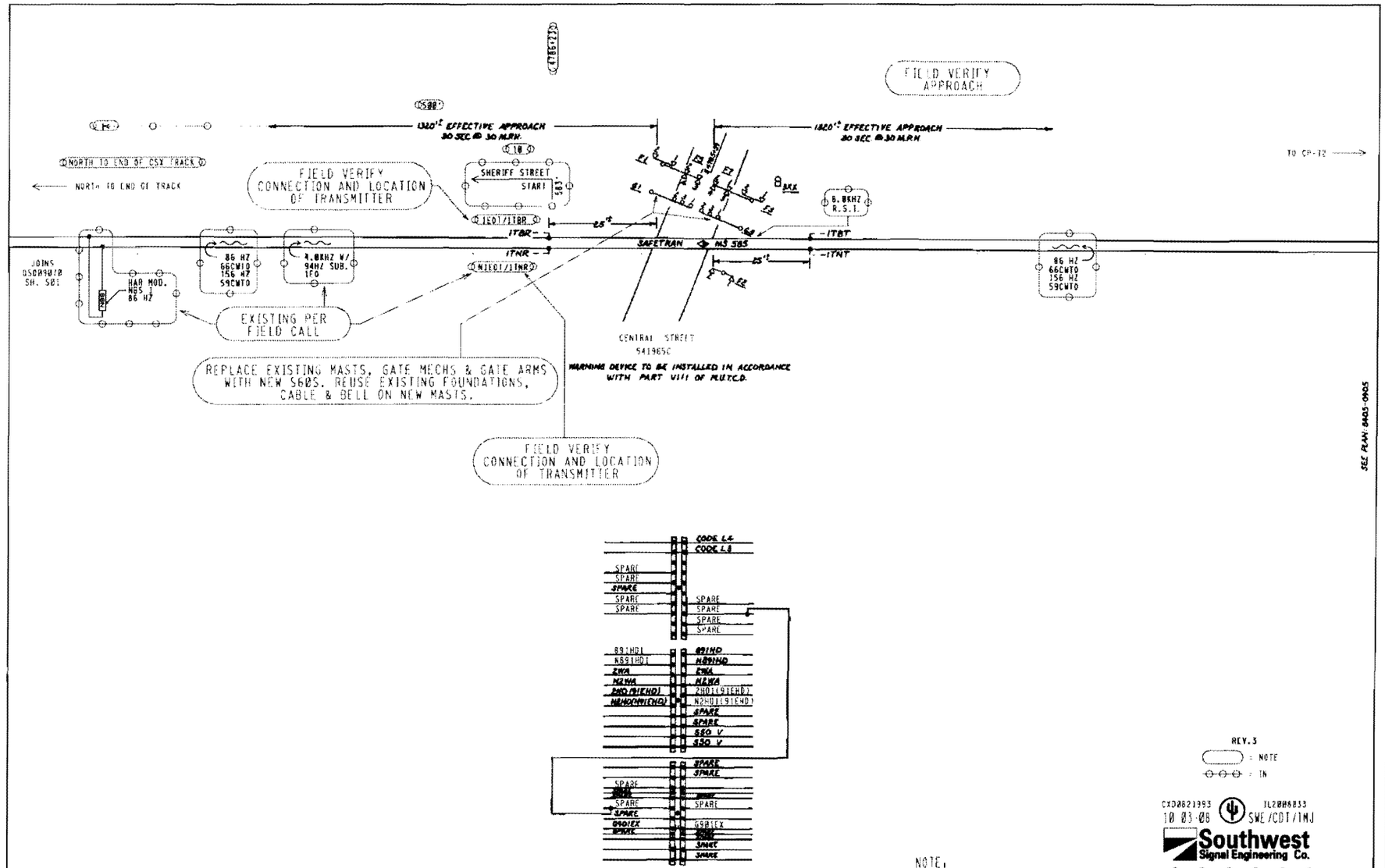
FIELD VERIFY APPROACH
1320'± EFFECTIVE APPROACH 30 SEC @ 30 M.P.H.
1820'± EFFECTIVE APPROACH 30 SEC @ 30 M.P.H.
TO CP-72
NORTH TO END OF CSX TRACK
NORTH TO END OF TRACK
FIELD VERIFY CONNECTION AND LOCATION OF TRANSMITTER
SHERIFF STREET
START
1E01/1TBR
1TBR
1TNR
N1E01/1TNR
25'±
SAFETRAN
MS 585
8 BKX
8.0KHZ R.S.T.
-1TBT
-1TNT
JOINS DSD09870 SH. S01
HAR MOD. NGS 1 86 HZ
86 HZ 66CWTO 156 HZ 59CWTO
8.0KHZ W/ 94HZ SUB. 1FO
EXISTING PER FIELD CALL
CENTRAL STREET
541965C
WARNING DEVICE TO BE INSTALLED IN ACCORDANCE WITH PART VIII OF MUTCD.
REPLACE EXISTING MASTS, GATE MECHS & GATE ARMS WITH NEW S60S. REUSE EXISTING FOUNDATIONS, CABLE & BELL ON NEW MASTS.
FIELD VERIFY CONNECTION AND LOCATION OF TRANSMITTER
SEE PLAN: 8405-0905
CODE L4
CODE L8
SPARE
891HD1
N891HD1
2HW
N2HW
2HD1(91EHD)
N2HD1(91EHD)
SPARE
SPARE
550 V
550 V
SPARE
SPARE
SPARE

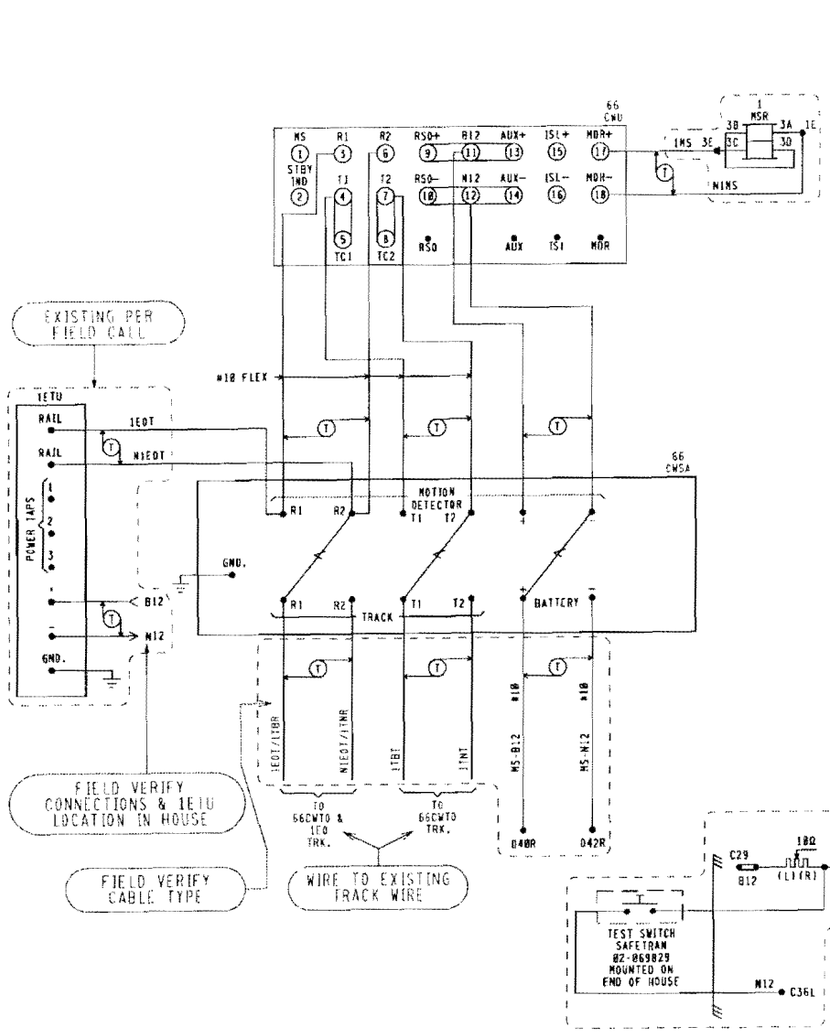

66CWU
PMD-3R MODULES REQUIRED

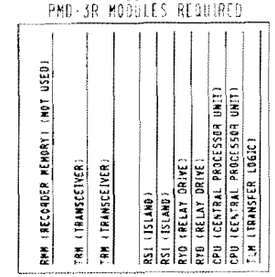

FRONT VIEW

RSI MODULE
226736-000 8.0KHZ
226736-001 4.0KHZ

ISLAND FREQ.
8.0KHZ

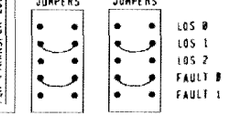

66 CWU

CABINET SWITCHES
THESE SWITCHES ARE LOCATED ON MOTHERBOARD

MASTER/SLAVE
MASTER — SLAVE
S1

SYSTEM CONFIGURATION				
S6 & S7 DIP SWITCH POSITIONS				
SWITCH	1	2	3	4
SWITCH POSITION	ON	OFF	OFF	OFF
APPROACH.	NORMAL		(NOT USED)	

	FREQUENCY SELECT					
NORMAL	S2 & S3 DIP SWITCH POSITIONS 86 HZ					
	SWITCH	1	2	3	4	5
	SWITCH POSITION	ON	OFF	OFF	OFF	OFF
STANDBY	S4 & S5 DIP SWITCH POSITIONS 86 HZ					
	SWITCH	1	2	3	4	5
	SWITCH POSITION	ON	OFF	OFF	OFF	OFF

TLM MODULE
JUMPERS AND SWITCHES

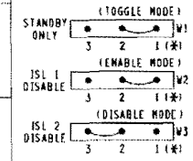

NOTE:
PIN 1 IS IDENTIFIED BY ASTERICK BELOW IT.
(☆) - MAY BE SET PER FIELD CONDITIONS.

MINUTE TIMEOUT SWITCH
SETTING (☆) 9 MINUTES

S2 STANDBY / AUTO / NORMAL

REV.3
: NOTE
: EXISTING

NEW WORK
CX0002993 IL2000033
10-03-08 SWE/CDT/TMJ

Southwest Signal Engineering Co.

REVISIONS
3. 10-03-08 SWE IL2000033 & IL0239

CSX TRANSPORTATION
RAIL TRANSPORT GROUP ENGINEERING
COMMUNICATIONS AND SIGNALS

CP 72 TO END OF CSX TRACK

CENTRAL STREET (541965C)
CROSSING DETECTION CIRCUITRY
PARIS, IL M.P. QSD-90.66

DESIGNED	DIGITIZED	CHECKED	DATE
SWE/CDT	SWE/TS	SWE	10-03-00

DRAWING	SHEET NO	NEXT SH	NEXT FILE	NEXT SH	FILE	SHEET
8405-0906	4	4A	QSD09066	C02	QSD09066	C01

66CWU

TRM LOCAL PARAMETERS PMD-3 DESIGN CARD

		DEFAULTS & /OR STYLE	FIELD RECORD
OPERATING PROGRAM PROG	VERSION AND COMPILE DATE	35.0 MM/DD/YY	__/__/__
SYSTEM MONITOR PROGRAM EPRM	VERSION AND COMPILE DATE	20.2 MM/DD/YY	__/__/__
ADJUSTMENT	RANGE	DEFAULT	TRACK 1
#1 RX	100 IS INTENDED	NA	
#2 PH (PHASE)	INTENDED ABOVE 32 (NOT ADJUSTABLE)	NA	
#3 CW / MD	CW OR MD NOT ADJUSTABLE FROM MD TOWARD CW (SEE TCR 430-01 FOR CONSTRAINTS)	MD	MD
#4 UNI/BI (IF CW IS CHOSEN IN #3)	UNI OR BI	BI	NA
#5 LIA (IF CW IS CHOSEN IN #3)	-9 TO +9	LIA=0	NA
#6 WT (IF CW IS CHOSEN IN #3)	23 TO 99	WT=99	NA
#7 TC	WHEN IN CONFORMANCE WITH PMD 3 MANUAL, ADJUST TC FOR A TRANSMITTER CHECK MONITOR VALUE LESS THAN 470	NA	
#8 D (BALLAST COMPENSATION)	50 TO 250 (FIELD ADJUSTMENT - ADJUST ONLY WHEN IN CONFORMANCE WITH DATA ACCUMULATED AT THIS SITE AND IN COMPLIANCE WITH SUPERVISOR INSTRUCTIONS & PMD-3 MANUAL)	NA	
#9 PC (PHASE COMPENSATION)	0 TO +10 (FIELD ADJUSTMENT - ADJUST ONLY WHEN IN CONFORMANCE WITH SUPERVISOR INSTRUCTIONS & PMD-3 MANUAL)	PC=0	
#10 FREQ	REFERENCE, NOT ADJUSTABLE FROM MENU	NA	NA
#11 FS-T (FALSE SHUNT TIMER)	ENTRANCE TO SUDDEN FALSE SHUNT SUB-MENU	NA	NA
#12 FR (FALSE SHUNT % OF RX APPROACH)	0 TO 80 NOT ADJUSTABLE FROM ZERO UNTIL AFTER STRICT DESIGN REVIEW FOR SITE APPLICATION CONFLICTS. FR=0 MEANS DISABLED (SEE TCR 430-01 FOR CONSTRAINTS)	FR=0	FR=0
#13 FT (FAULT TIMER)	0 TO 99 MINUTES (FACTORY DEFAULT IS 10)	FT=10	NA
#14 AR-T (APPROACH RELEASE TIMER)	ENTRANCE TO SUB-MENU FOR RESIDUAL FALSE SHUNT STARTED DURING TRAIN PASSAGE	NA	NA
#15 AR (FALSE SHUNT % OF RX APPROACH)	0 TO 80 NOT ADJUSTABLE FROM ZERO UNTIL AFTER STRICT DESIGN REVIEW FOR SITE APPLICATION CONFLICTS AR=0 MEANS DISABLED (SEE TCR 430 01 FOR CONSTRAINTS)	AR=0	AR=0
#16 AT (FAULT TIMER)	0 TO 99 MINUTES (FACTORY DEFAULT IS 10)	AT=10	AT=10
#17 HS (HIGHEST STABLE R VALUE)	REFERENCE, NOT ADJUSTABLE FROM MENU	NA	NA
#18 LP (LOWEST STABLE PHASE)	REFERENCE, NOT ADJUSTABLE FROM MENU	NA	NA
#19 SD (SELF DIAGNOSTICS)	REFERENCE, NOT ADJUSTABLE FROM MENU, BUT MENU CAN REVIEW, THEN CLEAR DIAGNOSTIC CODES	NA	NA
#20 REC (TRAIN RECORD DISPLAY)	REFERENCE, SEQUENTIAL DISPLAY OF PREVIOUS WARNING TIME RECORDS (NO ADJUSTMENT)	NA	NA
#21 PRN (PRINTER/LAPTOP READY)	STARTS DOWNLOAD OF INTERNAL TRAIN EVENT LOG WHEN SERIAL PORT CABLE CONNECTED	NA	NA
#22 LSP (LOCAL SERIAL PORT)	ENTRANCE TO SUB-MENU FOR SETTING SPEED OF SERIAL PORT DOWNLOADS	NA	NA
#23 @ (BAUD RATE)	BAUD RATE OF 38,400 IS 384 AND DEFAULT	@=384	@=384
#24 DB (DATA BITS)	7 OR 8 8 IS DEFAULT	DB=8	DB=8
#25 PA (PARITY)	O, E, OR N N IS DEFAULT	PA=N	PA=N
#26 AR (AUTO RX)	UP OR DN DN IS FACTORY DEFAULT (FIELD ADJUSTMENT - ADJUST TO "UP" ONLY WHEN BC HAS BEEN PREVIOUSLY STABILIZED THROUGH ADJUSTMENT, AND ONLY WHEN IN CONFORMANCE WITH SUPERVISOR INSTRUCTIONS AND PMD-3 MANUAL)	AR=DN	AR=DN
#27 RX (POTENTIOMETER VALUE)	REFERENCE, DISPLAY ONLY	NA	NA
#28 VERS (PROGRAM VERSION)	REFERENCE, SEQUENTIAL DISPLAY OF EPROM AND SOFTWARE VERSIONS	NA	NA

REV.3

NEW WORK

CXD0821993 IL2000033

10-03-00 SWE/CDT/TMJ

Southwest Signal Engineering Co.

REVISIONS
3 10-03-00 SWE IL2000033, IL0259

CSX TRANSPORTATION

RAIL TRANSPORT GROUP ENGINEERING COMMUNICATIONS AND SIGNALS

CP72 TO END OF CSX SIDING

CENTRAL STREET (541965C)

DETECTION DEVICE PROGRAM

PARIS, IL M.P. QSD-98.66

DESIGNED	DIGITIZED	CHECKED	DATE
SWE/CDT	SWE/TS	SWE	10-03-00

DRAWING	SHEET NO	NEXT SH	NEXT FILE	NEXT SH	FILE	SHEET
8405-0906	4A	5	QSD09066	C03	QSD09066	C02

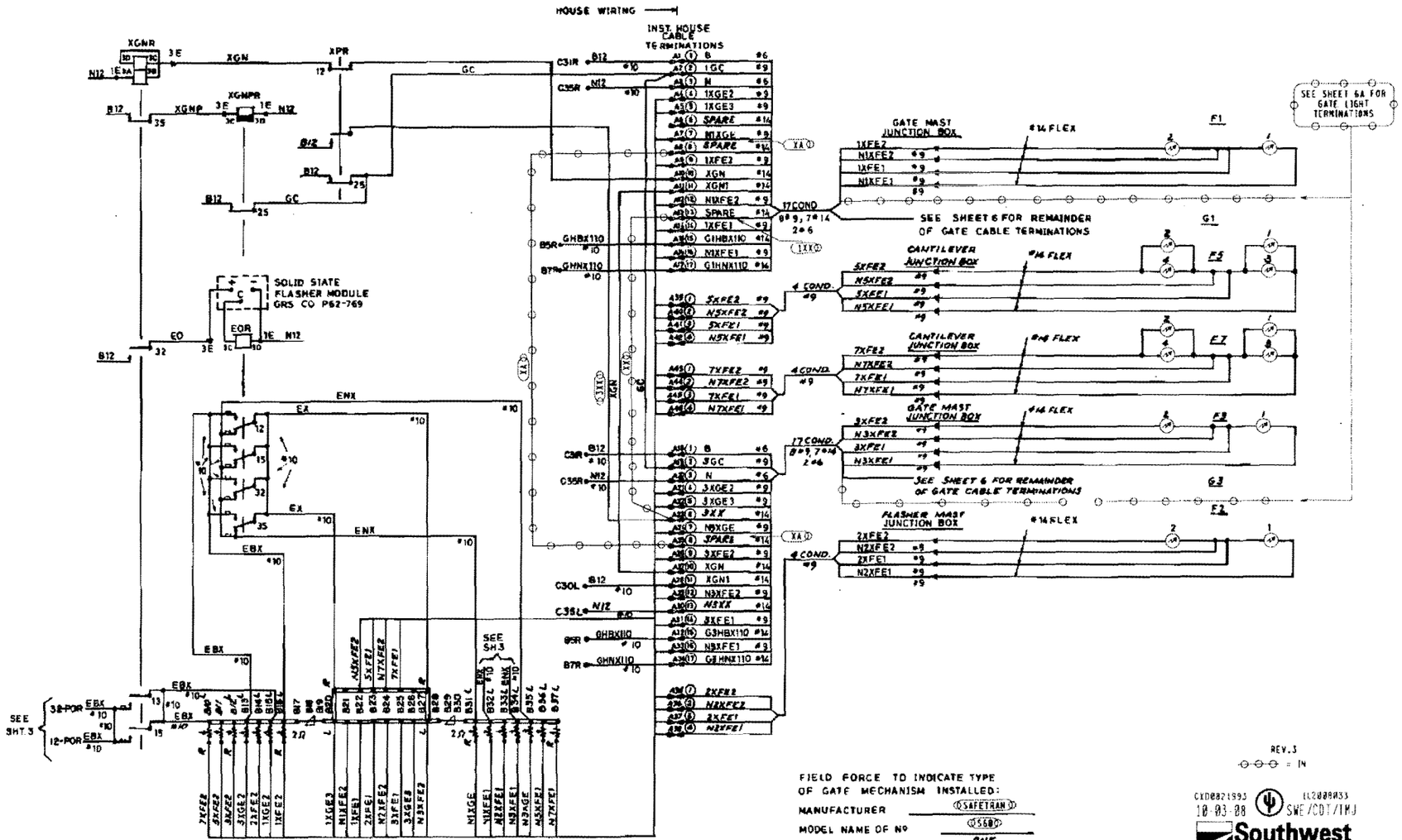

FIELD FORCE TO INDICATE TYPE OF GATE MECHANISM INSTALLED:

MANUFACTURER (SAFETRAN)

MODEL NAME OF Nº (S560)

NUMBER OF BELLS ONE

(SEE SHEET 6 FOR TYPICAL MECHANISMS)

REV. 3

= IN

CXD0821993 IL2008033

10-03-08 SWE/CDT/TMJ

Southwest Signal Engineering Co.

CP 72 TO END OF CSX TRACK

REVISIONS
1 01-10-89 48606
2 03-28-08 SAF IL2006050 VECTOR CREATED
3 10-03-08 SWE IL2008033, IL0259

CSX TRANSPORTATION

RAIL TRANSPORT GROUP ENGINEERING COMMUNICATIONS AND SIGNALS

ST. MARYS TO END OF TRACK

CENTRAL STREET (541965C)

GATE CONTROL, LIGHTING CIRCUITS AND CABLE TERMINATIONS

PARIS, IL M.P. -90.66 (GSD-90.66)

DESIGNED	DIGITIZED	CHECKED	DATE
SAF-KSP	SAF-SMV	SAF-DLK	01-10-86

DRAWING	SHEET NO	NEXT SH	NEXT FILE	NEXT SH	FILE	SHEET
8405-0906	5	6	GSD090866	C03	GSD090866	C02

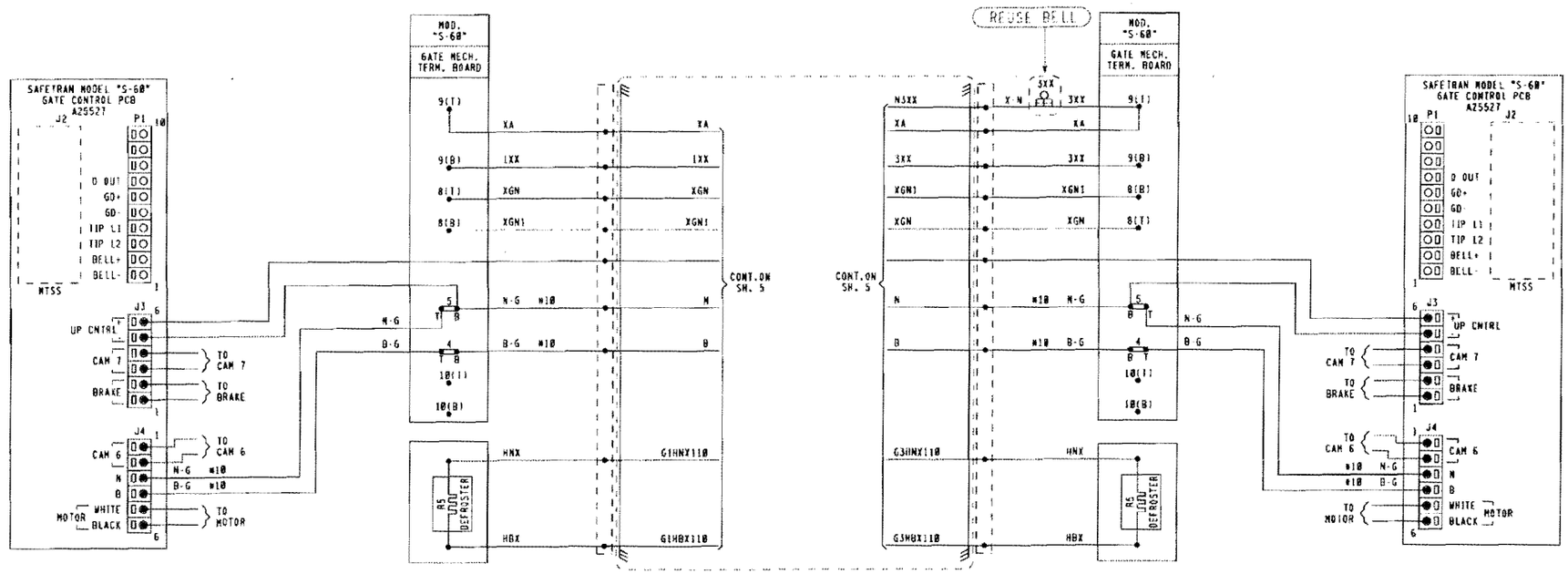

NOTES:
1. [ ] : TERMINAL IN JCT. BOX BASE.
2. ALL WIRING #16 UNLESS NOTED OTHERWISE

REV.3
( ) = NEW
( ) = EXISTING

NEW WORK
CXD002:953 IL2000033
10-03-08 SWE/CDT/TMJ

Southwest Signal Engineering Co.

REVISIONS
3 10-03-08 SWE IL2000033, IL0259

CSX TRANSPORTATION
RAIL TRANSPORT GROUP ENGINEERING
COMMUNICATIONS AND SIGNALS

CP 72 TO END OF CSX TRACK
CENTRAL STREET (541965C)
CROSSING WARNING DEVICE GATE CIRCUITRY
PARIS, IL M.P. QSD-90.65

DESIGNED	DIGITIZED	CHECKED	DATE
SWE/CDT	SWE/TS	SWE	10-03-08

DRAWING	SHEET NO	NEXT SH	NEXT FILE	NEXT SH	FILE	SHEET
8405-0906	6	6A	QSD09066	C05	QSD09066	C04

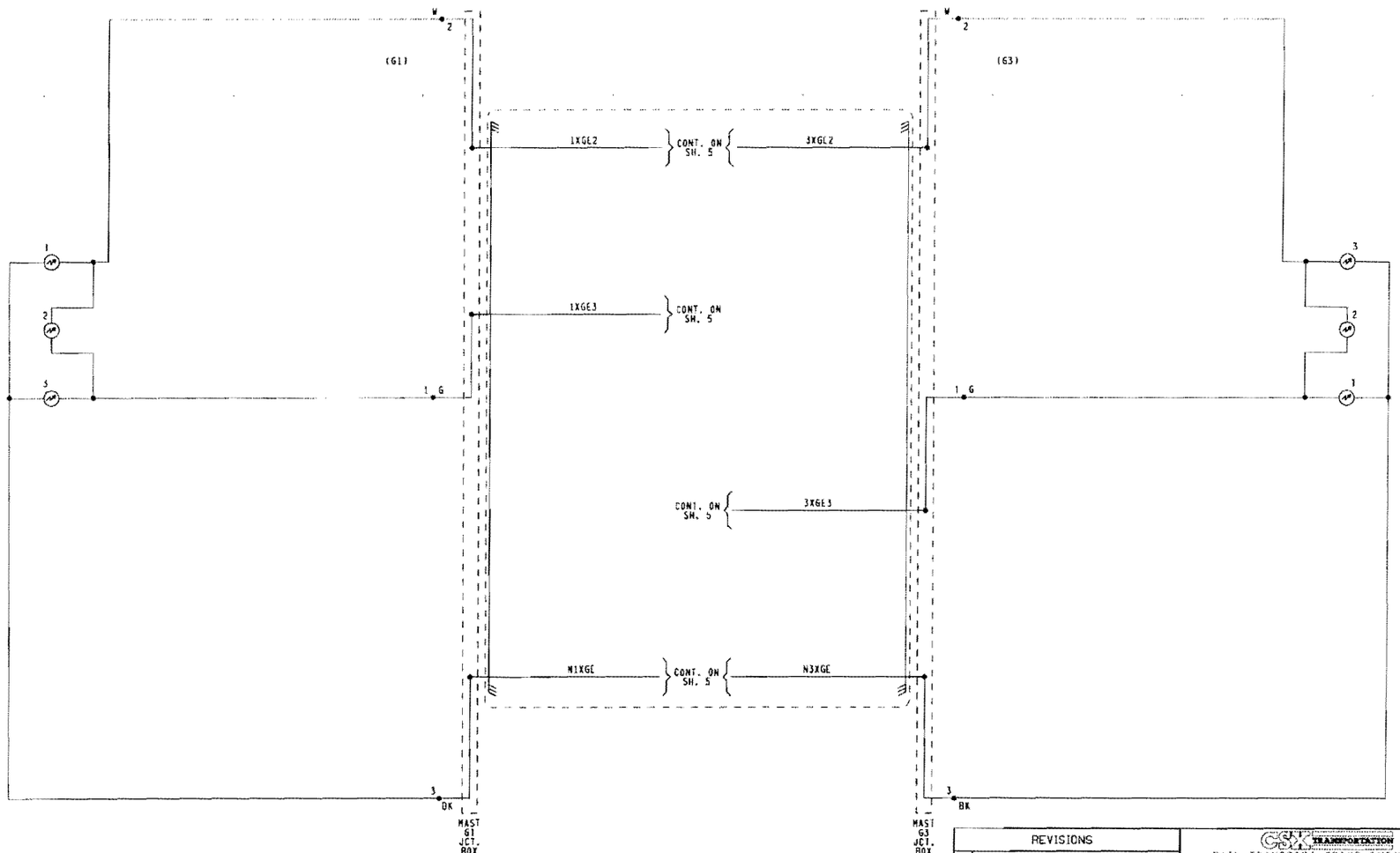

NOTES:

1. ⊏—⊐ : TERMINAL IN JUNCTION BOX
2. WHEN 7 OR MORE LIGHTS ON A SINGLE STRUCTURE REFER TO SS382 FOR REQUIRED ARRESTERING
3. UNLESS NOTED ALL OTHER WIRING #16

REV. 3

- EXISTING

NEW WORK

CX00821993 IL2008033

12-03-08 SWE/CDT/TMJ

Southwest Signal Engineering Co.

REVISIONS	
3	10-03-08 SWE IL2008033, IL0259

CSX TRANSPORTATION

RAIL TRANSPORT GROUP ENGINEERING
COMMUNICATIONS AND SIGNALS

CP 72 TO END OF CSX TRACK

CENTRAL STREET (541965C)

CROSSING WARNING DEVICE LIGHT CIRCUITRY

PARIS, IL M.P. QSD-90.66

DESIGNED	DIGITIZED	CHECKED	DATE
SWE/CDT	SWE/TS	SWE	10-03-08

DRAWING	SHEET NO	NEXT SH	NEXT FILE	NEXT SH	FILE	SHEET
8405-0906	6A	7	----	----	QSD09066	C05

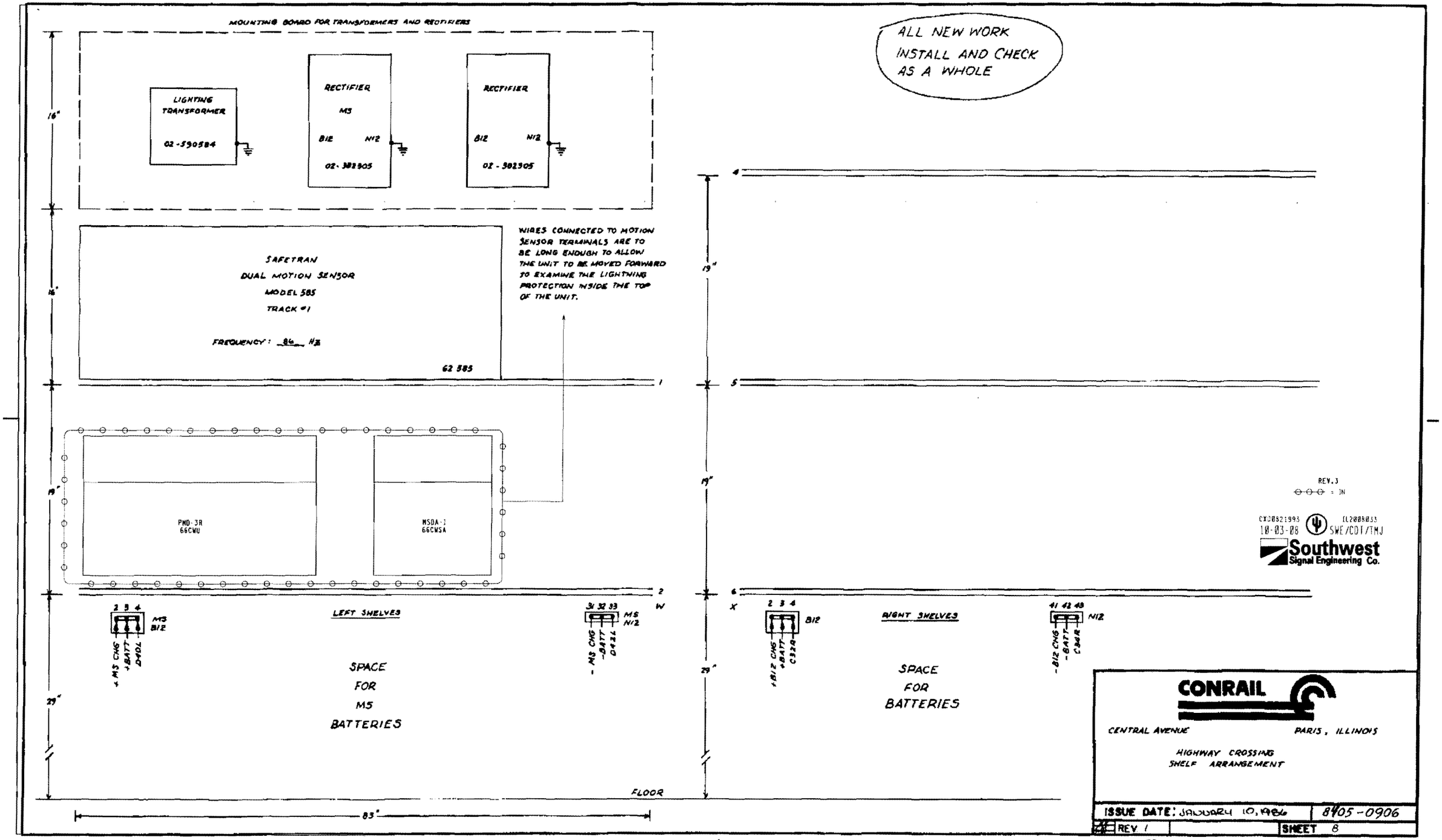
MOUNTING BOARD FOR TRANSFORMERS AND RECTIFIERS
LIGHTING TRANSFORMER
02-590584
RECTIFIER
M5
B12
N12
02-382905
RECTIFIER
B12
N12
02-382905
16"
16"
SAFETRAN
DUAL MOTION SENSOR
MODEL 585
TRACK #1
FREQUENCY: 84 Hz
62 585
WIRES CONNECTED TO MOTION SENSOR TERMINALS ARE TO BE LONG ENOUGH TO ALLOW THE UNIT TO BE MOVED FORWARD TO EXAMINE THE LIGHTNING PROTECTION INSIDE THE TOP OF THE UNIT.
19"
PMD-3R
66CMU
MSDA-1
66CMSA
2 3 4
M5
B12
+M5 CHG
+BATT
D40L
LEFT SHELVES
SPACE
FOR
M5
BATTERIES
31 32 33
M5
N12
-M5 CHG
-BATT
D42L
29"
W
X
ALL NEW WORK
INSTALL AND CHECK
AS A WHOLE
4
5
6
19"
19"
29"
2 3 4
B12
+B12 CHG
+BATT
C32R
RIGHT SHELVES
SPACE
FOR
BATTERIES
41 42 43
N12
-B12 CHG
-BATT
C34R
FLOOR
83"
REV.3
= IN
CY08021993
IL2008033
10-03-08
SWE/CDT/TMJ
Southwest
Signal Engineering Co.
CONRAIL
CENTRAL AVENUE
PARIS, ILLINOIS
HIGHWAY CROSSING
SHELF ARRANGEMENT
ISSUE DATE: JANUARY 10, 1986
8405-0906
REV 1
SHEET 8

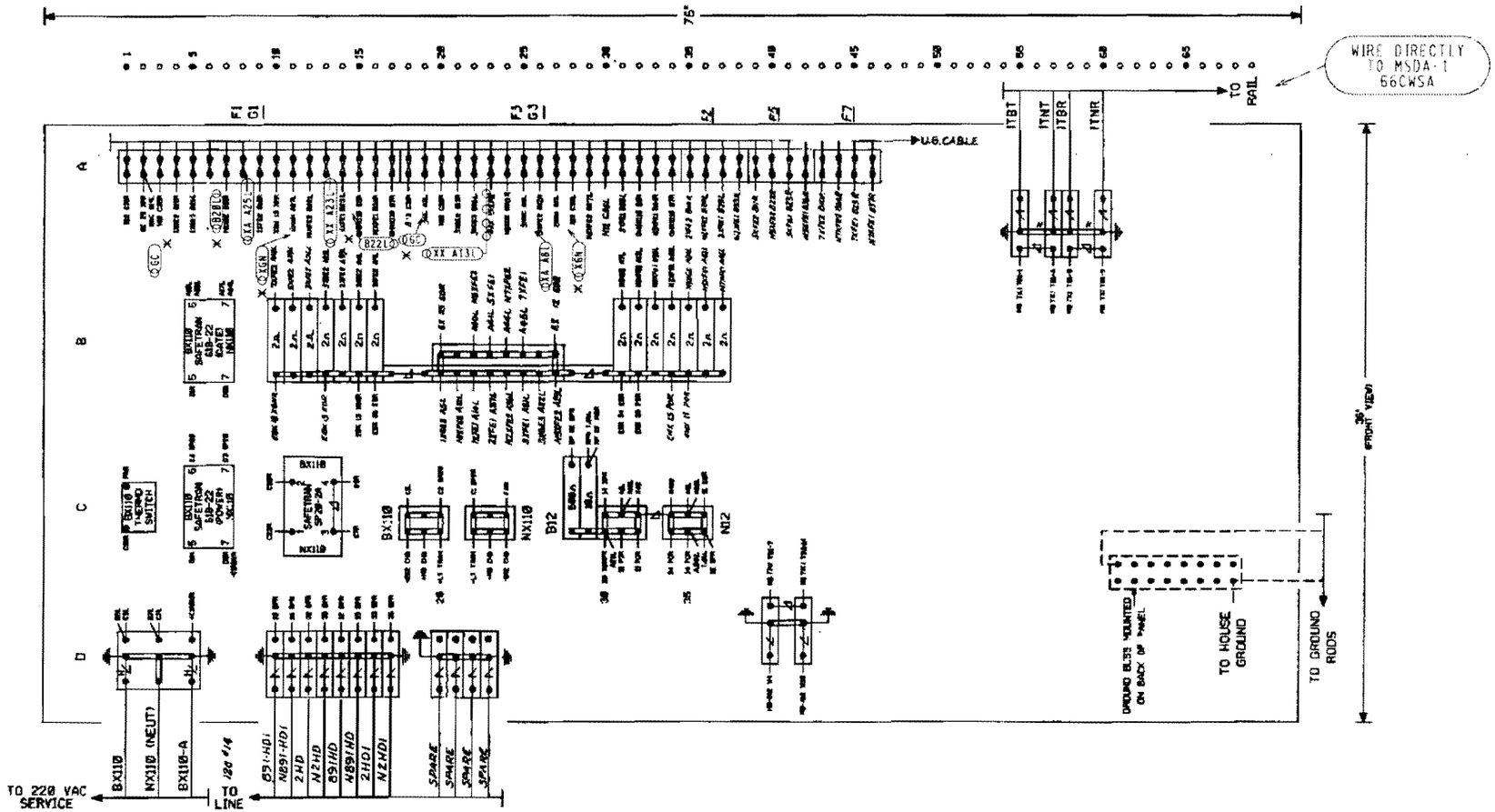

ALL NEW WORK INSTALL AND CHECK AS A WHOLE

CONRAIL

CENTRAL AVENUE, PARIS, ILLINOIS

HIGHWAY CROSSING
TERMINAL BOARD ARRANGEMENT

ISSUE DATE: JANUARY 10, 1986		8405-0906
REV. 1	- -	SHEET 9

C&S CAD

39

[100,101]HXMSG.DGN

CONTACT SPACE NO	ASCENDING CLOSES	ASCENDING OPENS	DESCENDING CLOSES	DESCENDING OPENS	FUNCTIONS OF CONTACTS
1	—	88°	78°	—	UP MOTOR CUT-OUT
2	76°	88°	85°	76°	HOLD CLEAR CONTR.
3	80°	—	—	50°	DOWN MOTOR CUT-OUT
4	—	70°	70°	—	MOTOR CONTROL RELAY CUT-OUT
5	—	5°	5°	—	SHUNT RESIS. SHUNT
6	85°	—	—	85°	IGNR CONTROL
7	6°	—	—	6°	BELL CONTROL

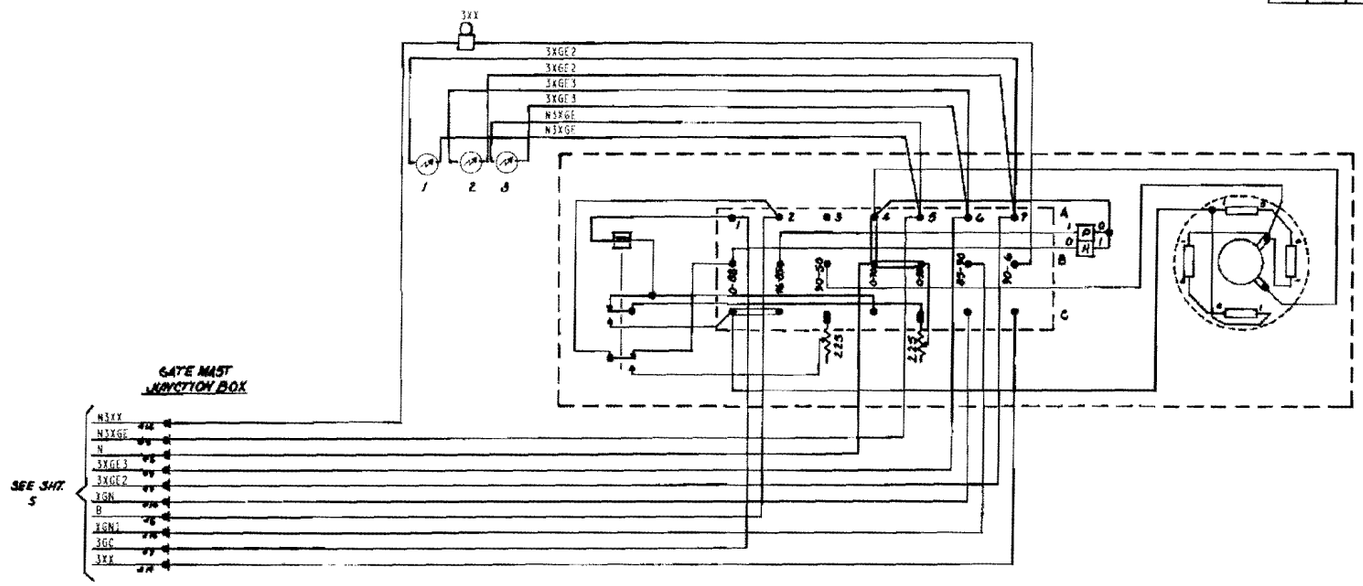

WESTERN RAILROAD SUPPLY COMPANY
GATE MECHANISM

✳ - ON GATE G1, THIS IS PRESENTLY TAGGED AS FGXP1

▽ - ON GATE G1, THIS IS PRESENTLY TAGGED AS FGXP

REV. 3
ALL OUT
THIS SHEET IS VOID
WHEN AS IN SERVICED.
CX00821993 112000033
10-03-08 SWE/CDT/TMJ

Southwest Signal Engineering Co.

REVISIONS	
1	01-10-89 48605
2	03-28-08 SAF CL2000058 VECTOR CREATED

CSX TRANSPORTATION
RAIL TRANSPORT GROUP ENGINEERING
COMMUNICATIONS AND SIGNALS

ST. MARYS TO END OF TRACK
CENTRAL STREET (541965C)
HIGHWAY CROSSING GATE MECHANISM
PARIS, IL M.P.-90.66

DESIGNED	DIGITIZED	CHECKED	DATE
SAF-KSP	SAF-SMV	SAF-DLK	01 10 86

DRAWING	SHEET NO	NEXT SH	NEXT FILE	NEXT SH	FILE	SHEET
8405-0906	6	7	----	----	QS005066	C03

MS FILE: QS00066.C03 PLOTTED FILE: QS00066C03.DGN

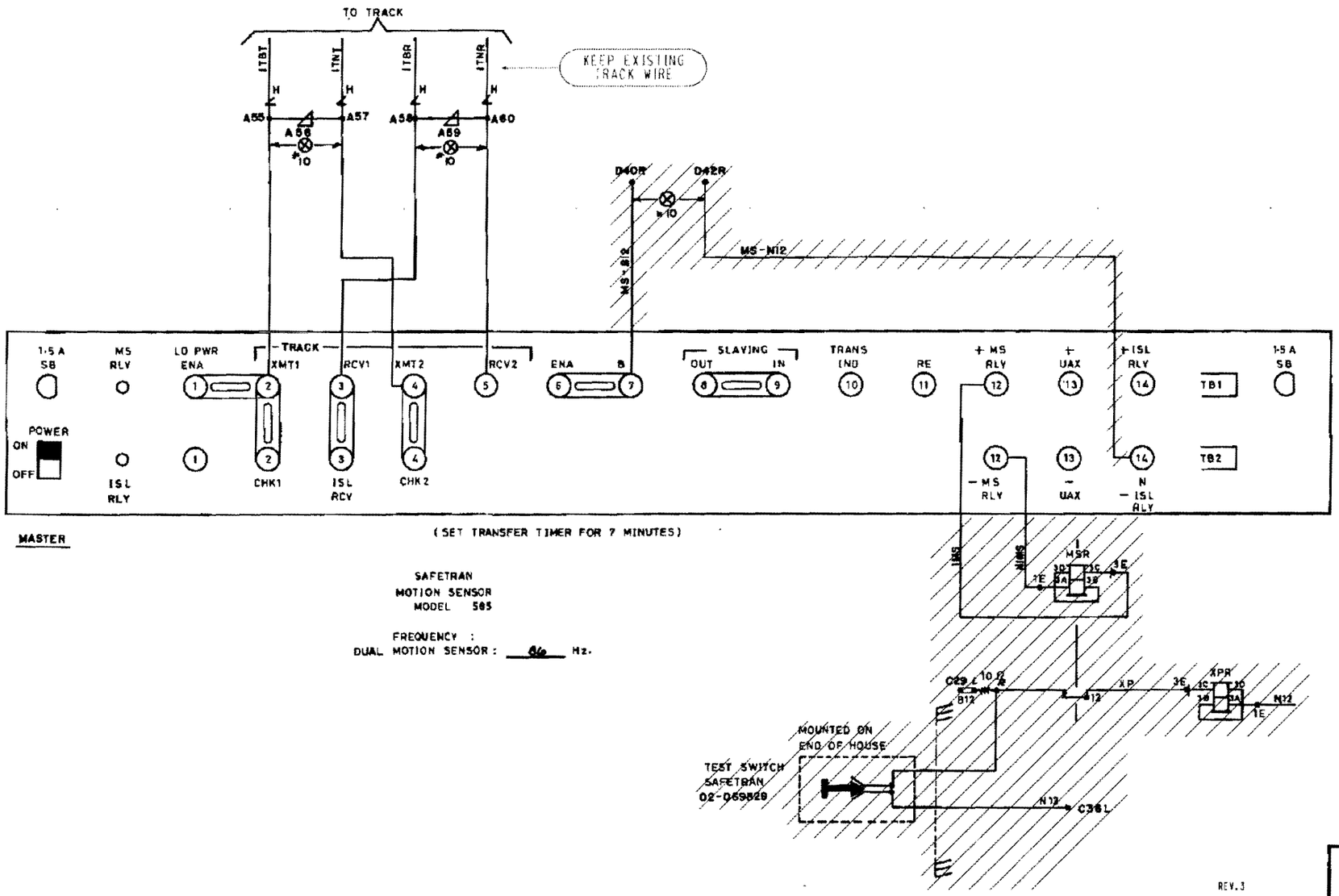

REV.3

= SHOWN ELSEWHERE

ALL ELSE OUT THIS SHEET IS VOID WHEN AS IN SERVICED.

CX0021993 IL2008033

10-03-08 SWE/CDT/TMJ

Southwest Signal Engineering Co.

CONRAIL

CENTRAL AVENUE, PARIS, ILLINOIS

HIGHWAY CROSSING
MOTION SENSOR CIRCUITS
SAFETRAN M.S. 585

ISSUE DATE: JANUARY 13, 1986 | 8405-0906

REV. 1 | SHEET 4

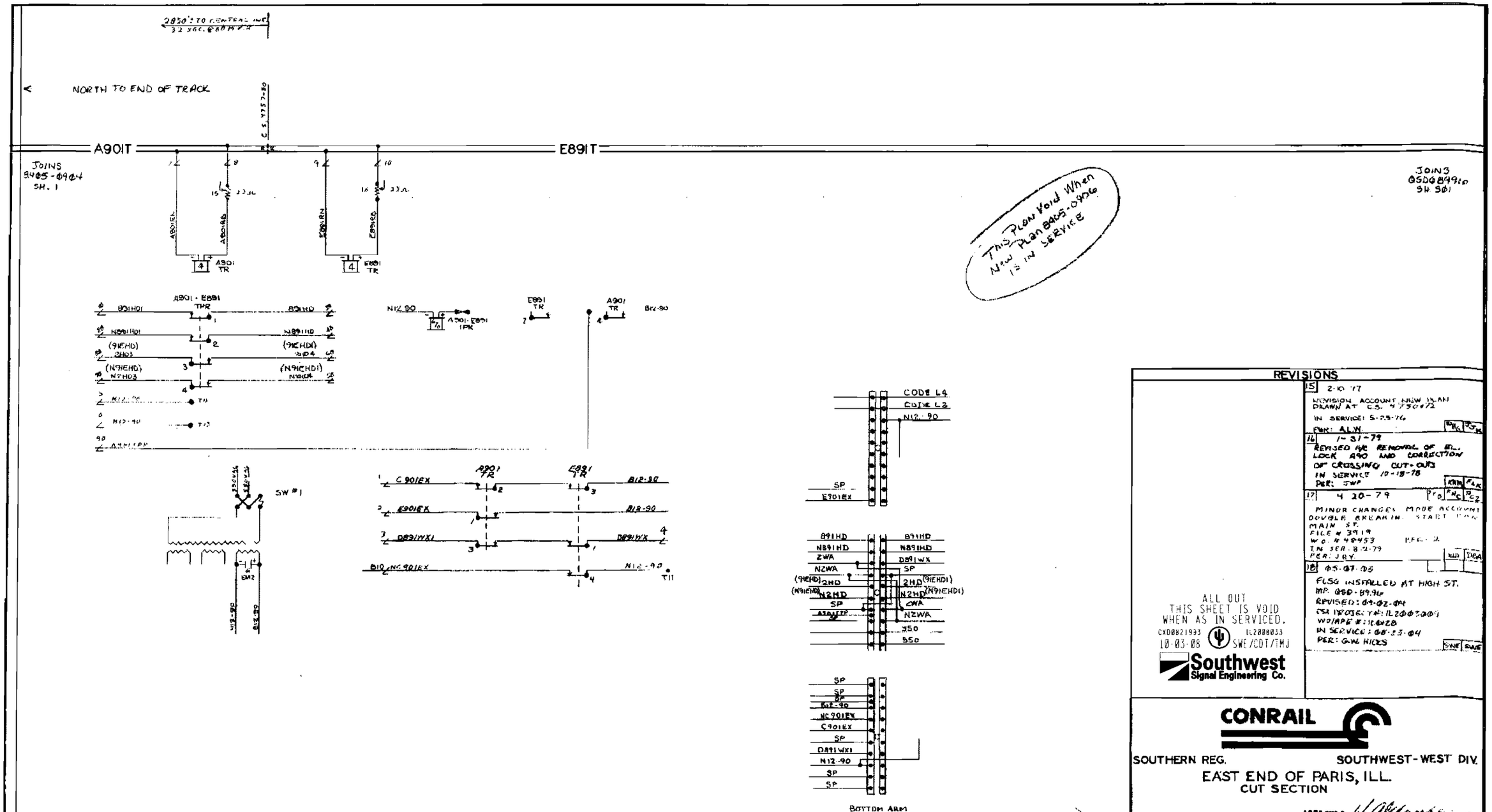
2850' TO CENTRAL INE
NORTH TO END OF TRACK
A901T
E891T
JOINS 8405-0904 SH. 1
JOINS 0500 8996 SH 901
A901 TR
E891 TR
A901 - E891 TPR
A901 - E891 TPR
SW #1
CODE L4
CODE L3
SP
E901EX
BOTTOM ARM
THIS PLAN VOID WHEN NEW PLAN 8405-0906 IS IN SERVICE
ALL OUT
THIS SHEET IS VOID
WHEN AS IN SERVICED.
10-03-08 SWE/CDT/TMJ
Southwest Signal Engineering Co.
REVISIONS
15 2-10-77
REVISION ACCOUNT NEW IN AN
DRAWN AT C.S. 4750+72
IN SERVICE: 5-23-76
PER: ALW
16 1-31-79
REVISED AND REMOVAL OF EL. LOCK A90 AND CORRECTION OF CROSSING CUT-OUTS
IN SERVICE 10-18-78
PER: JWP
17 4-20-79
MINOR CHANGES MODE ACCOUNT DOUBLE BREAK IN START TRK MAIN ST.
FILE # 3919
W.O. # 40453
IN SER. 8-2-79
PER: JRY
18 05-07-03
FLSG INSTALLED AT HIGH ST.
MP. 0500-89.96
REVISED: 04-02-04
CSX PROJECT #: IL2000300
WO/MPE #: 314428
IN SERVICE: 08-23-04
PER: GWE HICKS
CONRAIL
SOUTHERN REG.
SOUTHWEST-WEST DIV.
EAST END OF PARIS, ILL.
CUT SECTION
APPROVED
CHIEF ENGR. C.&S.
PHILADELPHIA, PA
ISSUE DATE: FEB. 10, 1977
8405-0901
REV 18
05-07-03
SHEET 1 OF 1

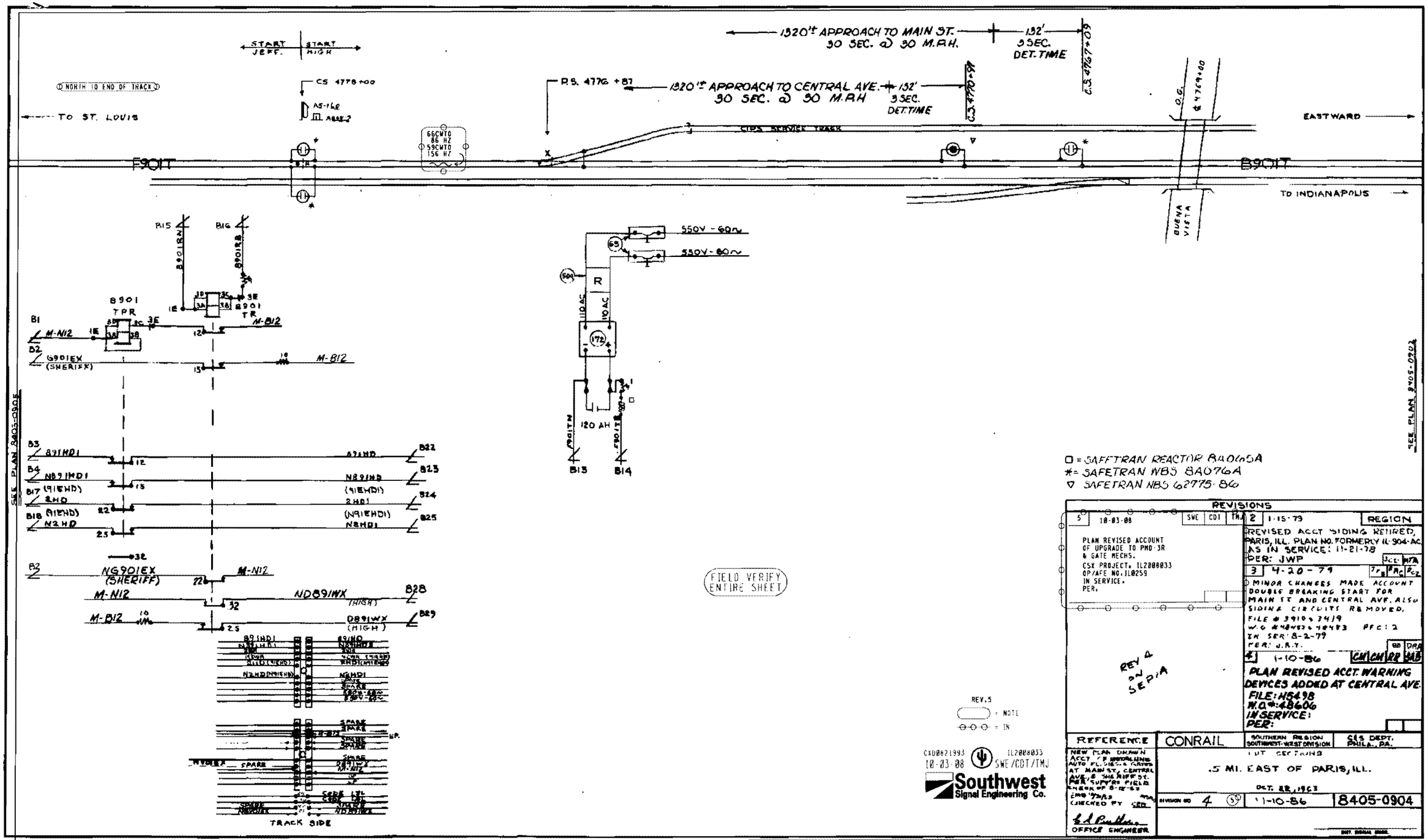
START JEFF.
START HIGH
1320'± APPROACH TO MAIN ST.
30 SEC. @ 30 M.P.H.
132'
3 SEC. DET. TIME
C.S. 4767+09
NORTH 10 END OF TRACK
TO ST. LOUIS
CS 4778+00
AS-142
ABAX-2
R.S. 4776 +87
1320'± APPROACH TO CENTRAL AVE.
30 SEC. @ 30 M.P.H.
132'
3 SEC. DET. TIME
C.S. 4770+98
O.G.
4769+00
EASTWARD
66CWTO 86 HZ
59CWTO 156 HZ
CIPS SERVICE TRACK
F90IT
B90IT
TO INDIANAPOLIS
BUENA VISTA
B15
B16
89OIRN
89OIRB
8901 TPR
8901 TR
M-B12
M-N12
G901EX (SHERIFF)
B3
B4
B17
B18
B2
B22
B23
B24
B25
B28
B29
NG901EX (SHERIFF)
ND891WX (HIGH)
D891WX (HIGH)
TRACK SIDE
550V - 60~
550V - 60~
R
110 AC
120 AH
F90ITN
F90ITB
B13
B14
SEE PLAN 8405-0905
SEE PLAN 8405-0902
□ = SAFETRAN REACTOR 84065A
* = SAFETRAN WBS 84076A
▽ SAFETRAN WBS 62775-86
FIELD VERIFY ENTIRE SHEET
REV. 5
= NOTE
= IN
CX08021993
10-03-08
IL2008033
SWE/CDT/TMJ
Southwest Signal Engineering Co.
REVISIONS
5 10-03-08 SWE CDT TMJ
PLAN REVISED ACCOUNT OF UPGRADE TO PMD-3R & GATE MECHS.
CSX PROJECT. IL2008033
OP/AFE NO. IL0259
IN SERVICE.
PER.
2 1-15-79 REGION
REVISED ACCT SIDING RETIRED, PARIS, ILL. PLAN NO. FORMERLY IL-904-AC
AS IN SERVICE: 11-21-78
PER: JWP
3 4-20-79
MINOR CHANGES MADE ACCOUNT DOUBLE BREAKING START FOR MAIN ST AND CENTRAL AVE. ALSO SIDING CIRCUITS REMOVED.
FILE # 3910 & 3419
W.O. # 48483 & 48483 PFC: 2
IN SER: 8-2-79
PER: J.R.Y.
4 1-10-86 CM CM DP GAB
PLAN REVISED ACCT. WARNING DEVICES ADDED AT CENTRAL AVE.
FILE: H5498
W.O.#: 48606
IN SERVICE:
PER:
REV 4 IN SEPIA
REFERENCE
NEW PLAN DRAWN ACCT. TO INSTALLING AUTO FLASHER GATES AT MAIN ST, CENTRAL AVE. & SHERIFF ST. PER SUPVR FIELD CHECK OF 8-12-69
CHECKED BY
OFFICE ENGINEER
CONRAIL
SOUTHERN REGION SOUTHWEST-WEST DIVISION
S&S DEPT. PHILA., PA.
.5 MI. EAST OF PARIS, ILL.
OCT. 28, 1963
DIVISION NO 4
11-10-86
8405-0904

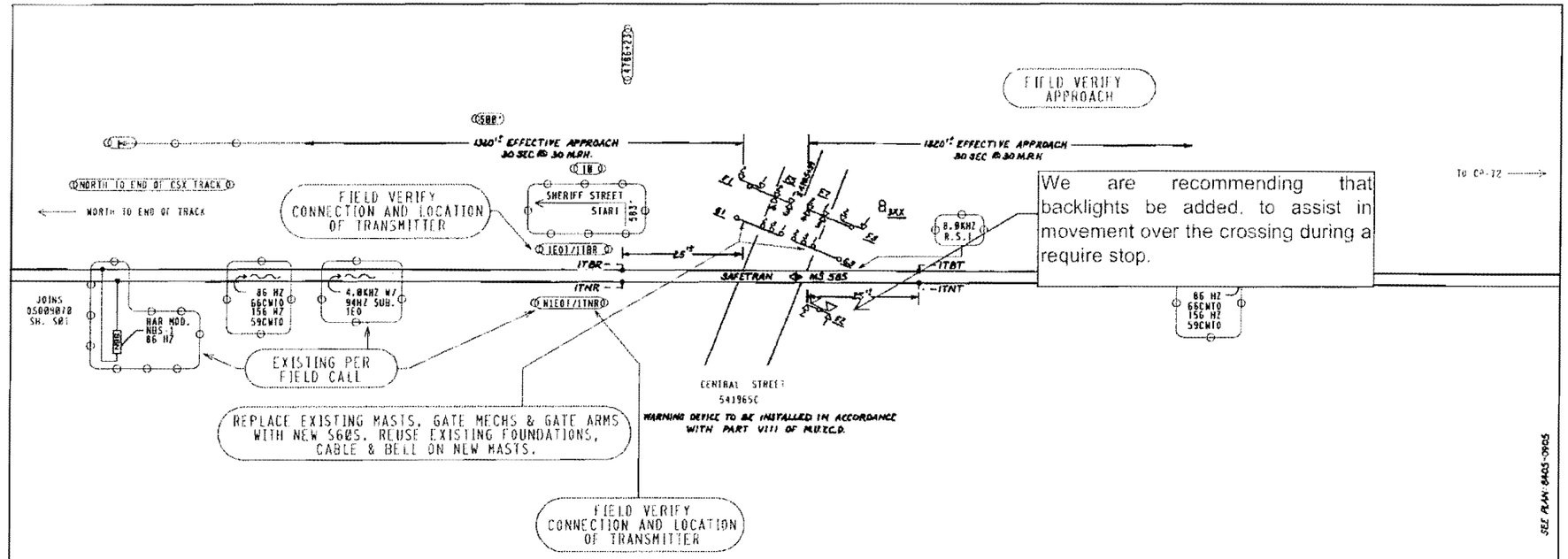

ICC staff recommendation 3/5/09

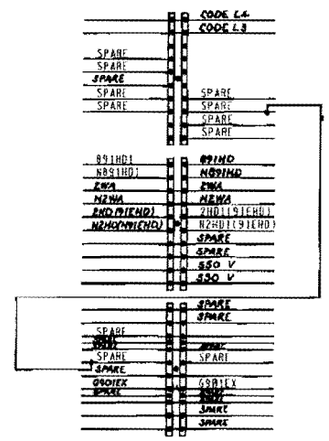
CODE L4
CODE L3
SPARE
SPARE
SPARE
SPARE
SPARE
SPARE
SPARE
SPARE
SPARE
891HD1
N891HD1
2WA
N2WA
2HD1(91EHD)
N2HD1(91EHD)
891HD
N891HD
2WA
N2WA
2HD1(91EHD)
N2HD1(91EHD)
SPARE
SPARE
550 V
550 V
SPARE
SPARE
SPARE
SPARE
SPARE
SPARE
SPARE
SPARE
SPARE

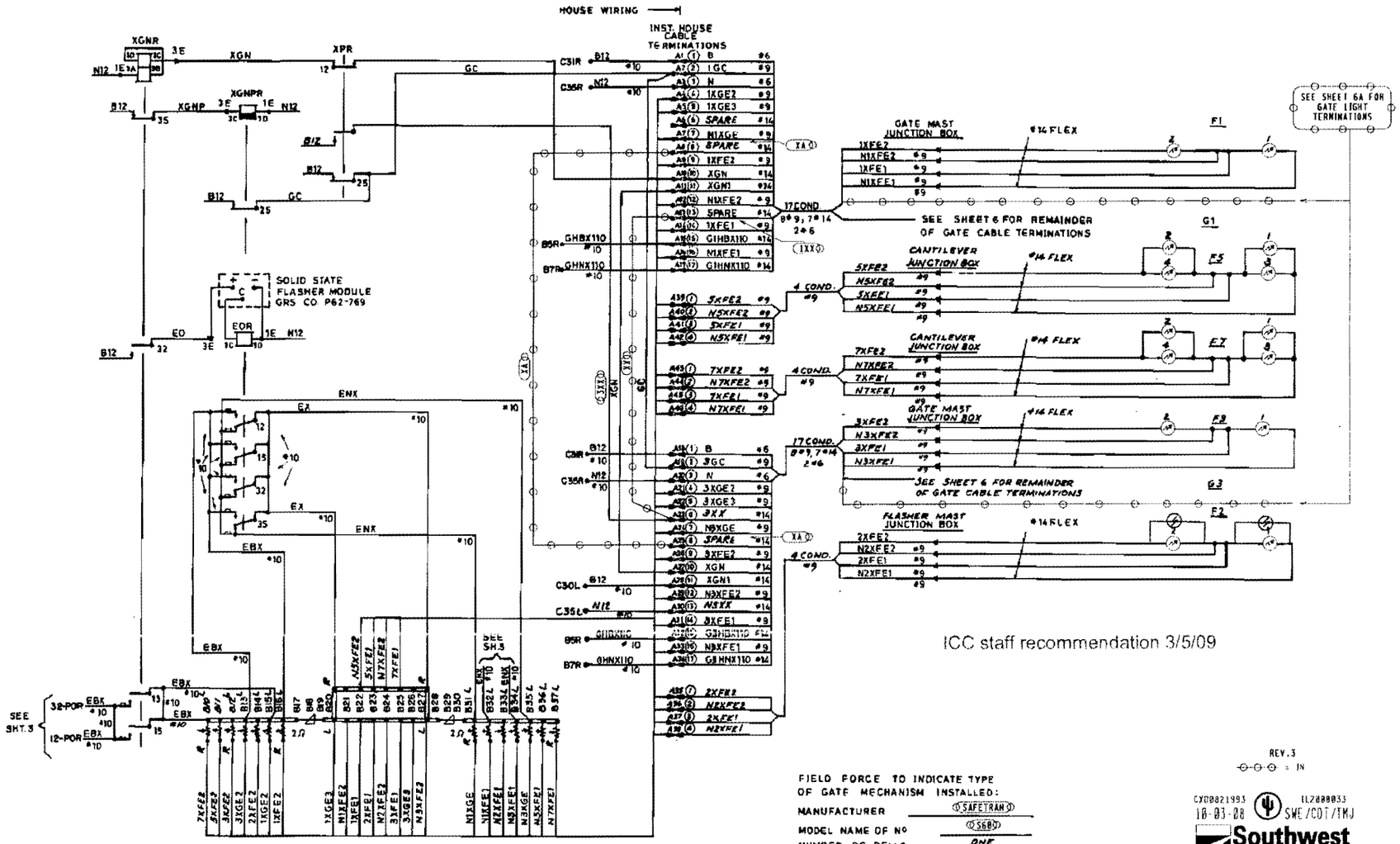

ICC staff recommendation 3/5/09

FIELD FORCE TO INDICATE TYPE OF GATE MECHANISM INSTALLED:

MANUFACTURER: SAFETRAN

MODEL NAME OF Nº: S680

NUMBER OF BELLS: ONE

(SEE SHEET 6 FOR TYPICAL MECHANISMS)

REV. 3

= IN

CX00821993 IL2000033

10-03-08 SWE/CDT/TMJ

Southwest Signal Engineering Co.

CP 72 TO END OF CSX TRACK

REVISIONS
1. 01-10-89 48606
2. 03-28-08 SAF IL2006050 VECTOR CREATED
3. 10-03-08 SWE IL2008033, IL0259

CSX TRANSPORTATION

RAIL TRANSPORT GROUP ENGINEERING COMMUNICATIONS AND SIGNALS

ST. MARYS TO END OF TRACK

CENTRAL STREET (541965C)

GATE CONTROL, LIGHTING CIRCUITS AND CABLE TERMINATIONS

PARIS, IL M.P. -90.66 (DSD-90.66)

DESIGNED	DIGITIZED	CHECKED	DATE
SAF-KSP	SAF-SHV	SAF-DLK	01-10-86

DRAWING	SHEET NO	NEXT SH	NEXT FILE	NEXT SH	FILE	SHEET
8405-0906	5	6	DSD09066	C03	DSD09066	C02

(C04) (C03)