SAB ENGINEERING

REVISIONS

1 1-10-86
NEW PLAN DRAWN ACCOUNT
WARNING DEVICES TO BE ADDED
AT MAIN STREET EXISTING PLAN
8405-0905 REV 3 VOID.

SYSTEM FILE NO: H5497
WO/AFE NO: 48606
IN SERVICE:
PER:

2 03-11-08 SAF IL2006051

3 10 03 08 SWE CDT TMJ

PLAN REVISED ACCOUNT
OF UPGRADE TO PMD-3R
& GATE MECHS.

CSX PROJECT. IL2008033
OP/AFE. IL0259
IN SERVICE.
PER.

AAR/DOT # 541 964V.

INDEX

SH. NO.	CONTENTS	REVISION NO. 1	2	3	4	5	6
1	TITLE, NOTES, INDEX AND REVISIONS	✓	✓	✓			
2	LOCATION PLAN	✓	✓	✓			
3	POWER DISTRIBUTION	✓					
4	HIGHWAY CROSSING MOTION SENSOR CIRCUITS	✓					
5	GATE CONTROL, LIGHTING CIRCUITS AND CABLE TERMINATIONS	✓	✓	✓			
6	GATE MECHANISMS TYPICAL	✓	✓				
7	RELAY RACK AND CONNECTIONS - HOUSE LAYOUT	✓					
8	SHELF ARRANGEMENT	✓		✓			
9	TERMINAL BOARD	✓		✓			
10							
4	CROSSING DETECTION CIRCUITRY			✓			
4A	DETECTION DEVICE PROGRAM			✓			
6	CROSSING WARNING DEVICE GATE CIRCUITRY			✓			
6A	CROSSING WARNING DEVICE LIGHT CIRCUITRY			✓			

NOTES

☐ =FOR MATERIAL REFERENCE SEE PLAN
⊗ =DENOTES TWISTED PAIR
GROUND IN ACCORDANCE WITH CS-9001-A

REV.3
⊖⊖⊖ : IN

CX08021993 IL2008033
10-03-08 SWE/CDT/TMJ

Southwest Signal Engineering Co.

CONRAIL

CENTRAL REGION SOUTHWEST DIVISION
DANVILLE SECONDARY
PARIS, ILLINOIS
MAIN STREET
TITLE, NOTES, INDEX AND REVISIONS

APPROVED: _____
CHIEF ENGINEER - C&S

PHILADELPHIA, PA.

ISSUE DATE: JANUARY 10, 1986 | 8405-0905

REV. 3 | 01-10-07 | SHEET 1 OF 9

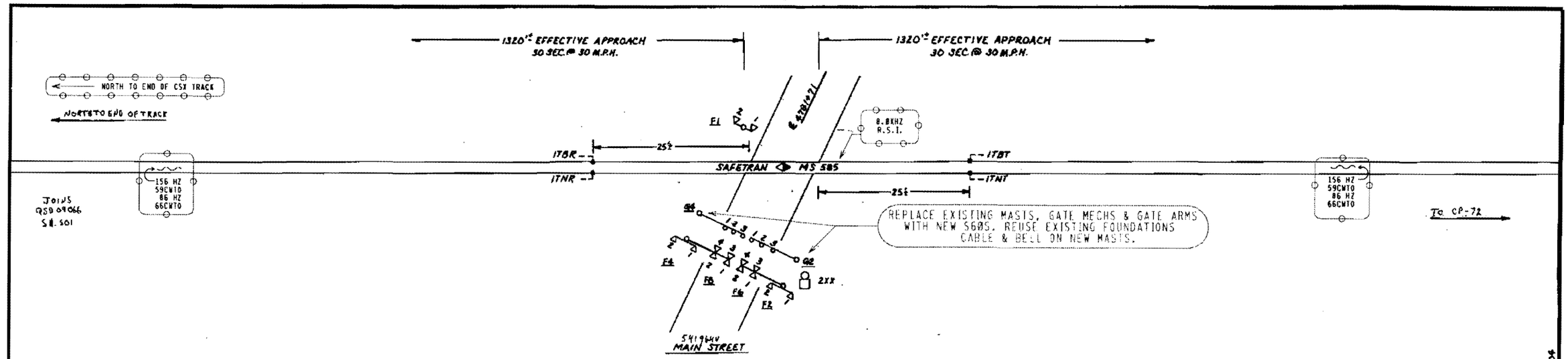

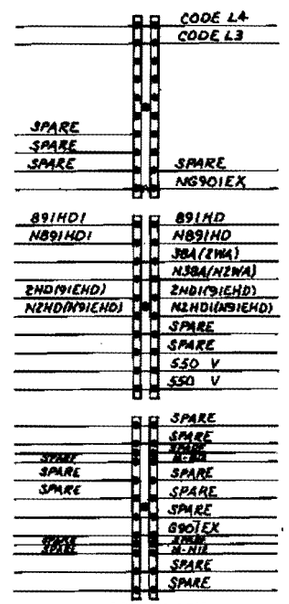

NOTE:
12V LED MAXIMUM CURRENT 1.7A
LED GATE ARM LIGHTS .3A MAXIMUM.

REV. 3
= NOTE
= IN

CXD0821993 L12808033
10-03-08 SWE/CDT/TMJ

Southwest Signal Engineering Co.

CONRAIL

MAIN STREET, PARIS, IL.

HIGHWAY CROSSING
LOCATION PLAN

ISSUE DATE: JANUARY 10, 1986		8405-0905
REV. 2	06-10-07	SHEET 2

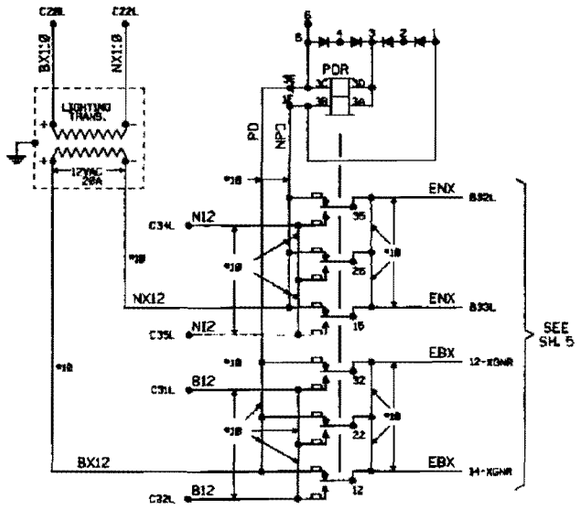

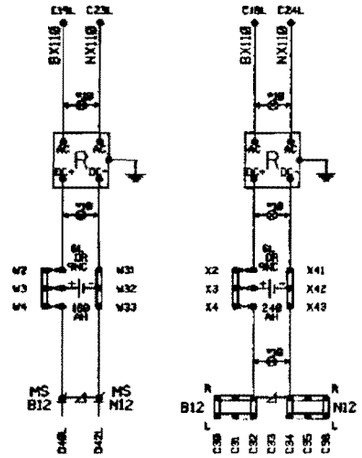

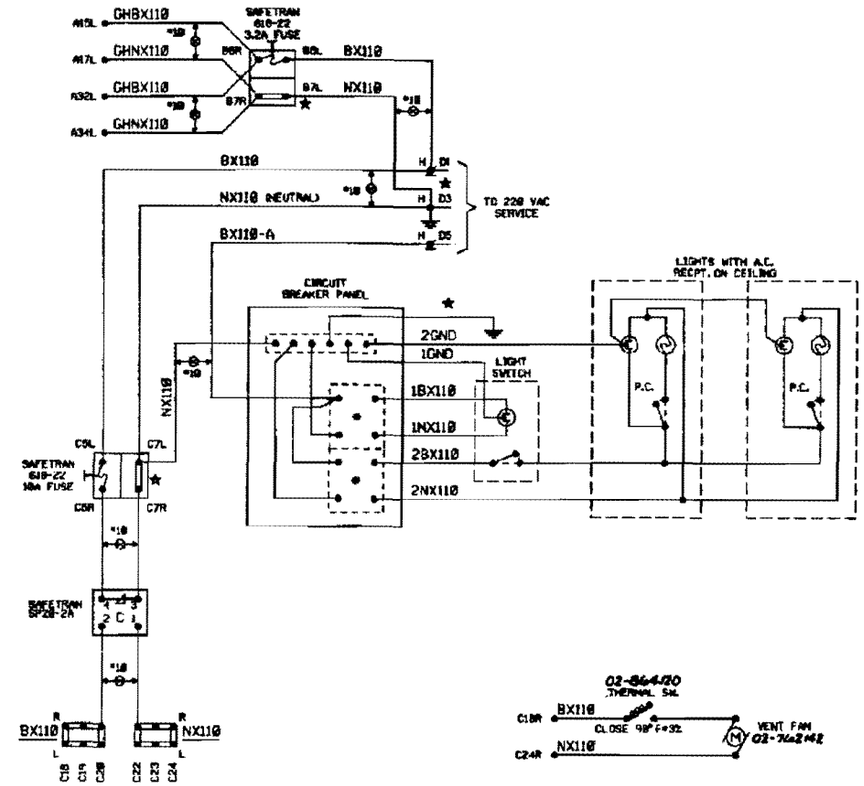

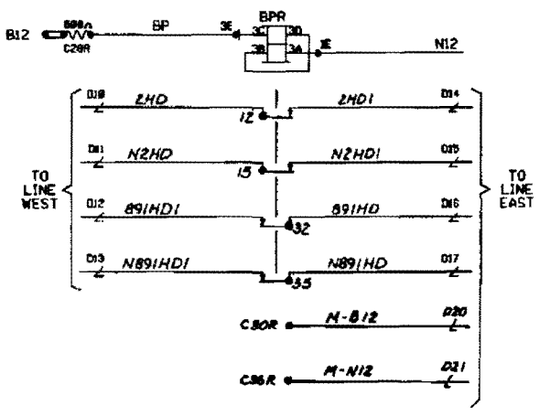

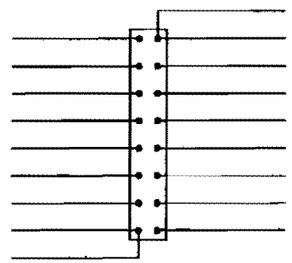

GROUND GRID

NO CHANGES

CX00821993 IL2008033
10-03-08 SWE/CDT/

Southwest Signal Engineering Co.

ALL NEW WORK
INSTALL AND CHECK
AS A WHOLE

NOTES:

★ = WHEN UNGROUNDED POWER IS USED, REPLACE LINKS WITH FUSE OR ARRESTOR EQUIVALENT TO BX110 SIDE OF CIRCUIT AND THE GROUND WIRES SHOULD BE REMOVED FROM BREAKER PANEL NEUTRAL BUSS AND TIED TO PANEL CASE.

⊗ = TWISTED PAIR.

● = 20A GROUND FAULT CIRCUIT BREAKER

ALL HOUSE WIRING #16 EXCEPT AS SHOWN.

CONRAIL

MAIN STREET, PARIS, ILLINOIS

HIGHWAY CROSSING
POWER DISTRIBUTION

ISSUE DATE: JANUARY 10, 1986		8405-0905
REV. 1	- -	SHEET 3

C&S CAD

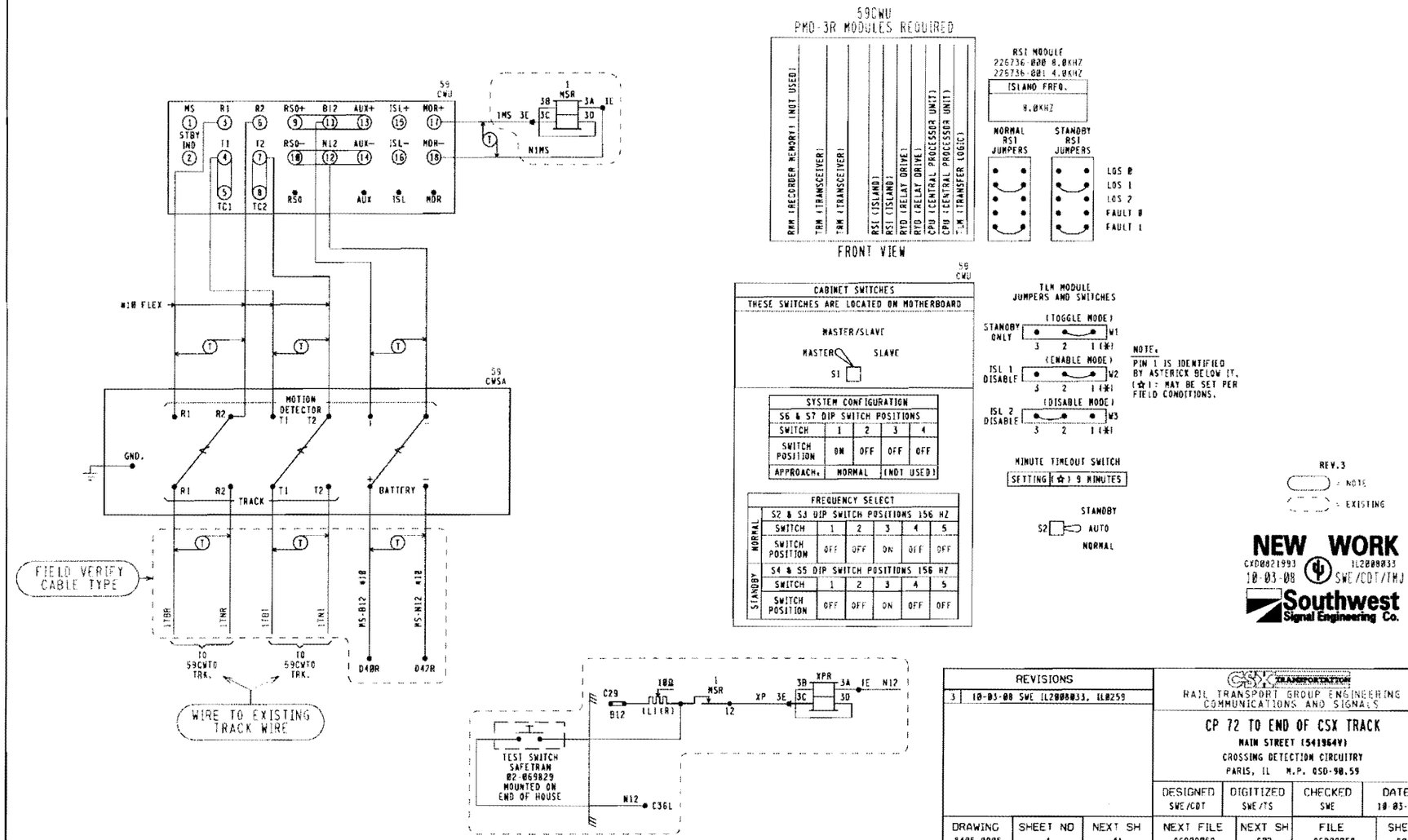

REVISIONS	
3	10-03-08 SWE IL2000033, IL0259

CSX TRANSPORTATION
RAIL TRANSPORT GROUP ENGINEERING
COMMUNICATIONS AND SIGNALS

CP 72 TO END OF CSX TRACK

MAIN STREET (541964Y)
CROSSING DETECTION CIRCUITRY
PARIS, IL M.P. QSD-90.59

DESIGNED	DIGITIZED	CHECKED	DATE
SWE/CDT	SWE/TS	SWE	10-03-08

DRAWING	SHEET NO	NEXT SH	NEXT FILE	NEXT SH	FILE	SHEET
8405-8905	4	4A	QSD09059	C02	QSD09059	C01

59CWU

TRM LOCAL PARAMETERS PMD-3R DESIGN CARD

		DEFAULTS & /OR STYLE	FIELD RECORD
OPERATING PROGRAM PROG	VERSION AND COMPILE DATE	35.0 MM/DD/YY	__/__/__
SYSTEM MONITOR PROGRAM EPRM	VERSION AND COMPILE DATE	20.2 MM/DD/YY	__/__/__
ADJUSTMENT	RANGE	DEFAULT	TRACK 1
#1 RX	100 IS INTENDED	NA	
#2 PH (PHASE)	INTENDED ABOVE 32 (NOT ADJUSTABLE)	NA	
#3 CW / MO	CW OR MO NOT ADJUSTABLE FROM MO TOWARD CW (SEE TCR 430-01 FOR CONSTRAINTS)	MO	MO
#4 UNI/BI (IF CW IS CHOSEN IN #3)	UNI OR BI	BI	NA
#5 LTA (IF CW IS CHOSEN IN #3)	-9 TO +9	LTA=0	NA
#6 WT (IF CW IS CHOSEN IN #3)	23 TO 99	WT=99	NA
#7 TC	WHEN IN CONFORMANCE WITH PMD 3R MANUAL, ADJUST TC FOR A TRANSMITTER CHECK MONITOR VALUE LESS THAN 470	NA	
#8 B (BALLAST COMPENSATION)	50 TO 250 (FIELD ADJUSTMENT - ADJUST ONLY WHEN IN CONFORMANCE WITH DATA ACCUMULATED AT THIS SITE AND IN COMPLIANCE WITH SUPERVISOR INSTRUCTIONS & PMD-3R MANUAL)	NA	
#9 PC (PHASE COMPENSATION)	0 TO +10 (FIELD ADJUSTMENT - ADJUST ONLY WHEN IN CONFORMANCE WITH SUPERVISOR INSTRUCTIONS & PMD-3R MANUAL)	PC=0	
#10 FREQ	REFERENCE, NOT ADJUSTABLE FROM MENU	NA	NA
#11 FS-T (FALSE SHUNT TIMER)	ENTRANCE TO SUDDEN FALSE SHUNT SUB-MENU	NA	NA
#12 FR (FALSE SHUNT % OF RX APPROACH)	0 TO 80 NOT ADJUSTABLE FROM ZERO UNTIL AFTER STRICT DESIGN REVIEW FOR SITE APPLICATION CONFLICTS. FR=0 MEANS DISABLED (SEE TCR 430-01 FOR CONSTRAINTS)	FR=0	FR=0
#13 FT (FAULT TIMER)	0 TO 99 MINUTES (FACTORY DEFAULT IS 10)	FT=10	NA
#14 AR-T (APPROACH RELEASE TIMER)	ENTRANCE TO SUB-MENU FOR RESIDUAL FALSE SHUNT STARTED DURING TRAIN PASSAGE	NA	NA
#15 AR (FALSE SHUNT % OF RX APPROACH)	0 TO 80 NOT ADJUSTABLE FROM ZERO UNTIL AFTER STRICT DESIGN REVIEW FOR SITE APPLICATION CONFLICTS AR=0 MEANS DISABLED (SEE TCR 430-01 FOR CONSTRAINTS)	AR=0	AR=0
#16 AT (FAULT TIMER)	0 TO 99 MINUTES (FACTORY DEFAULT IS 10)	AT=10	AT=10
#17 HS (HIGHEST STABLE R VALUE)	REFERENCE, NOT ADJUSTABLE FROM MENU	NA	NA
#18 LP (LOWEST STABLE PHASE)	REFERENCE, NOT ADJUSTABLE FROM MENU	NA	NA
#19 SD (SELF DIAGNOSTICS)	REFERENCE, NOT ADJUSTABLE FROM MENU, BUT MENU CAN REVIEW, THEN CLEAR DIAGNOSTIC CODES	NA	NA
#20 REC (TRAIN RECORD DISPLAY)	REFERENCE, SEQUENTIAL DISPLAY OF PREVIOUS WARNING TIME RECORDS (NO ADJUSTMENT)	NA	NA
#21 PRN (PRINTER/LAPTOP READY)	STARTS DOWNLOAD OF INTERNAL TRAIN EVENT LOG WHEN SERIAL PORT CABLE CONNECTED	NA	NA
#22 LSP (LOCAL SERIAL PORT)	ENTRANCE TO SUB-MENU FOR SETTING SPEED OF SERIAL PORT DOWNLOADS	NA	NA
#23 @ (BAUD RATE)	BAUD RATE OF 38,400 IS 384 AND DEFAULT	@=384	@=384
#24 DB (DATA BITS)	7 OR 8 8 IS DEFAULT	DB=8	DB=8
#25 PA (PARITY)	O, E, OR N N IS DEFAULT	PA=N	PA=N
#26 AR (AUTO RX)	UP OR DN DN IS FACTORY DEFAULT (FIELD ADJUSTMENT - ADJUST TO "UP" ONLY WHEN BC HAS BEEN PREVIOUSLY STABILIZED THROUGH ADJUSTMENT, AND ONLY WHEN IN CONFORMANCE WITH SUPERVISOR INSTRUCTIONS AND PMD-3R MANUAL)	AR=DN	AR=DN
#27 RX (POTENTIOMETER VALUE)	REFERENCE, DISPLAY ONLY	NA	NA
#28 VERS (PROGRAM VERSION)	REFERENCE, SEQUENTIAL DISPLAY OF EPROM AND SOFTWARE VERSIONS	NA	NA

REV.3

NEW WORK
CXD0871993 IL2000033
10-03-00 SWE/COT/TMJ
Southwest Signal Engineering Co.

REVISIONS
3 10-03-00 SWE IL2000033, IL0259

CSX TRANSPORTATION
RAIL TRANSPORT GROUP ENGINEERING
COMMUNICATIONS AND SIGNALS

CP 72 TO END OF CSX TRACK
MAIN STREET (541964V)
DETECTION DEVICE PROGRAM
PARIS, IL M.P. 050-90.59

DESIGNED	DIGITIZED	CHECKED	DATE
SWE/COT	SWE/TS	SWE	10-03-00

DRAWING	SHEET NO	NEXT SH	NEXT FILE	NEXT SH	FILE	SHEET
8425-0905	4A	5	-----	-----	050090059	C02

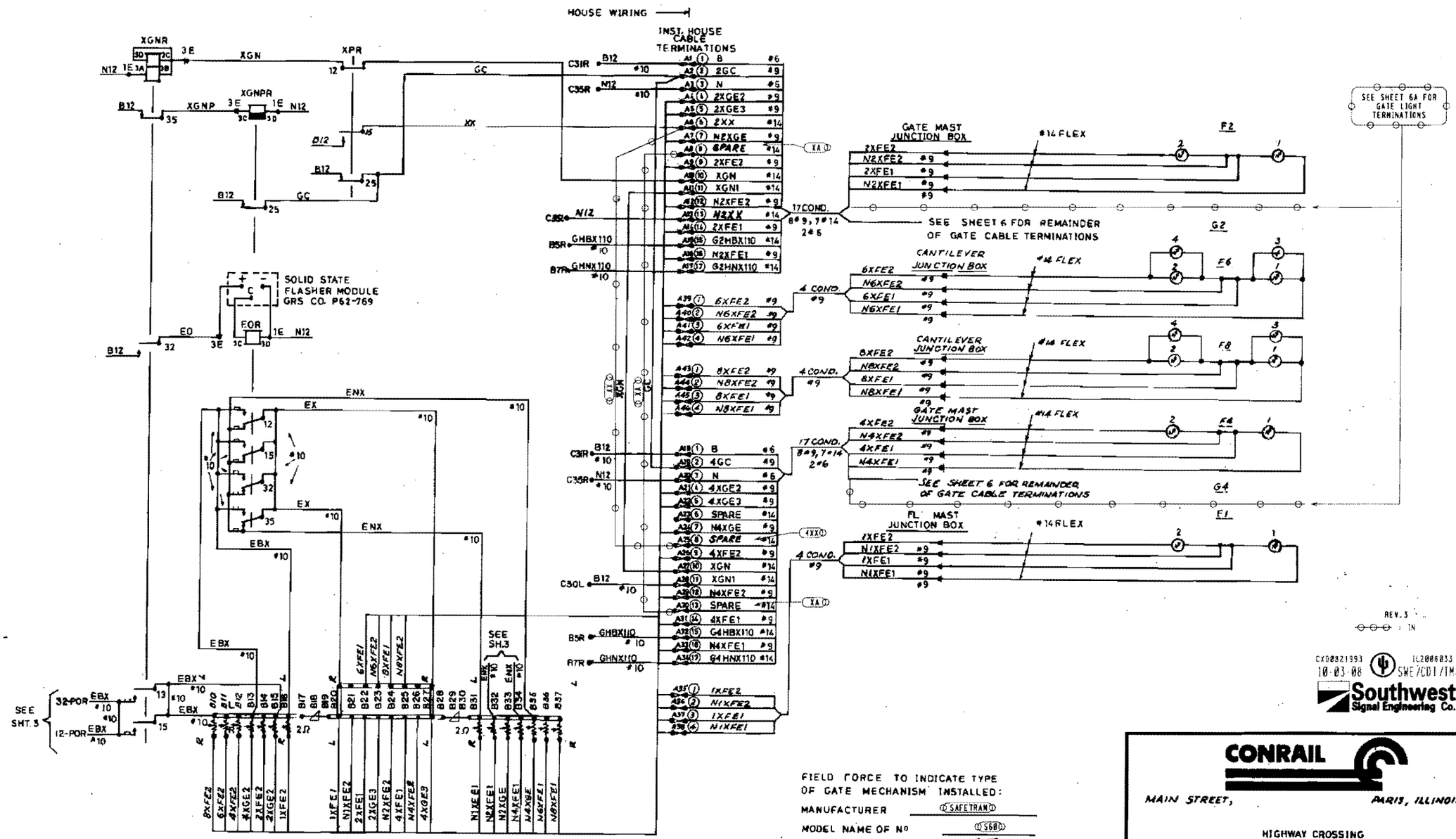

FIELD FORCE TO INDICATE TYPE OF GATE MECHANISM INSTALLED:

MANUFACTURER ___ SAFETRAN ___

MODEL NAME OF Nº ___ S680 ___

NUMBER OF BELLS ___ ONE ___

(SEE SHEET 6 FOR TYPICAL MECHANISMS)

CX00021993 10-03-08 IL2006033 SWE/CDI/TMJ

Southwest Signal Engineering Co.

CONRAIL

MAIN STREET, PARIS, ILLINOIS

HIGHWAY CROSSING
GATE CONTROL, LIGHTING CIRCUITS
AND CABLE TERMINATIONS

ISSUE DATE: JANUARY 10, 1986		8405-0906
REV. 1	01-10-02	SHEET 5

525-MS1-G

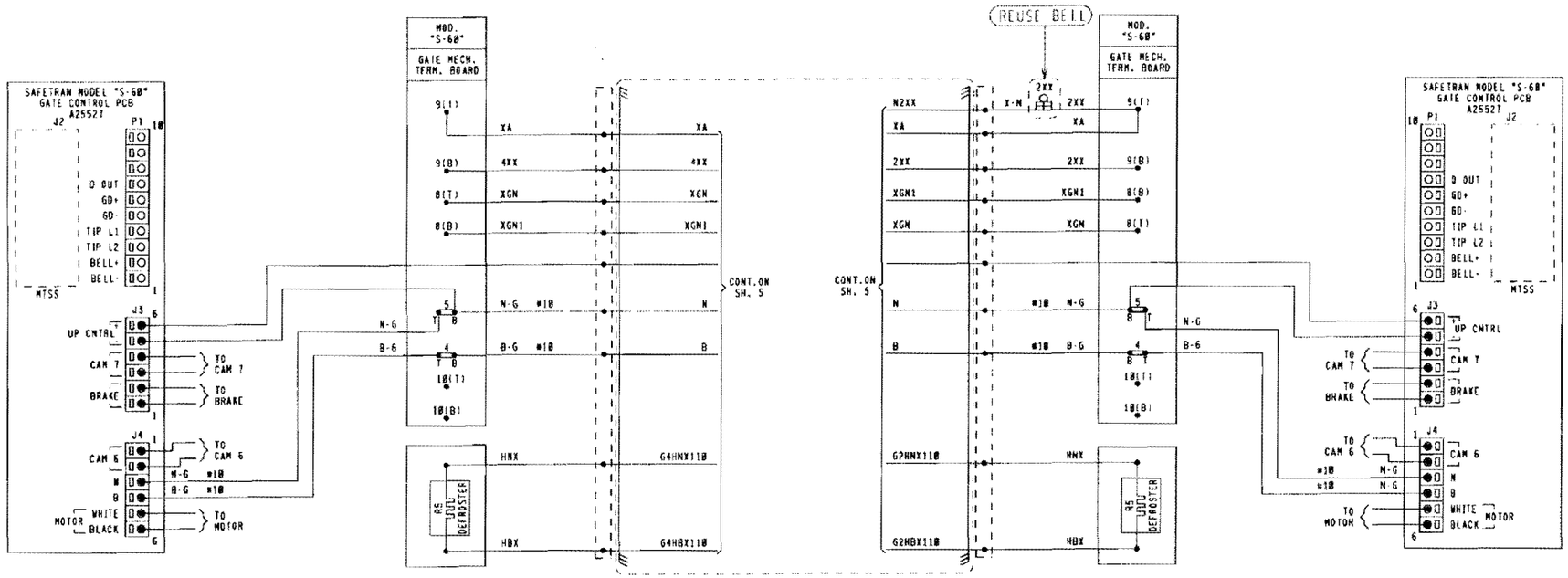

REV.3

= NOTE

= EXISTING

NOTES.
1. = TERMINAL IN JCT. BOX BASE.
2. ALL WIRING #16 UNLESS NOTED OTHERWISE

NEW WORK

CX0821993 IL2008033
10-03-08 SWE/CDT/TMJ

Southwest Signal Engineering Co.

REVISIONS	
3	10-03-08 SWE IL2008033, IL0259

CSX TRANSPORTATION
RAIL TRANSPORT GROUP ENGINEERING
COMMUNICATIONS AND SIGNALS

CP 72 TO END OF CSX TRACK
MAIN STREET (541964Y)
CROSSING WARNING DEVICE GATE CIRCUITRY
PARIS, IL M.P. QSD-90.59

DESIGNED	DIGITIZED	CHECKED	DATE
SWE/CDT	SWE/TS	SWE	10-03-08

DRAWING	SHEET NO	NEXT SH	NEXT FILE	NEXT SH	FILE	SHEET
8405 8905	6	6A	QSD89059	C05	QSD89059	C04

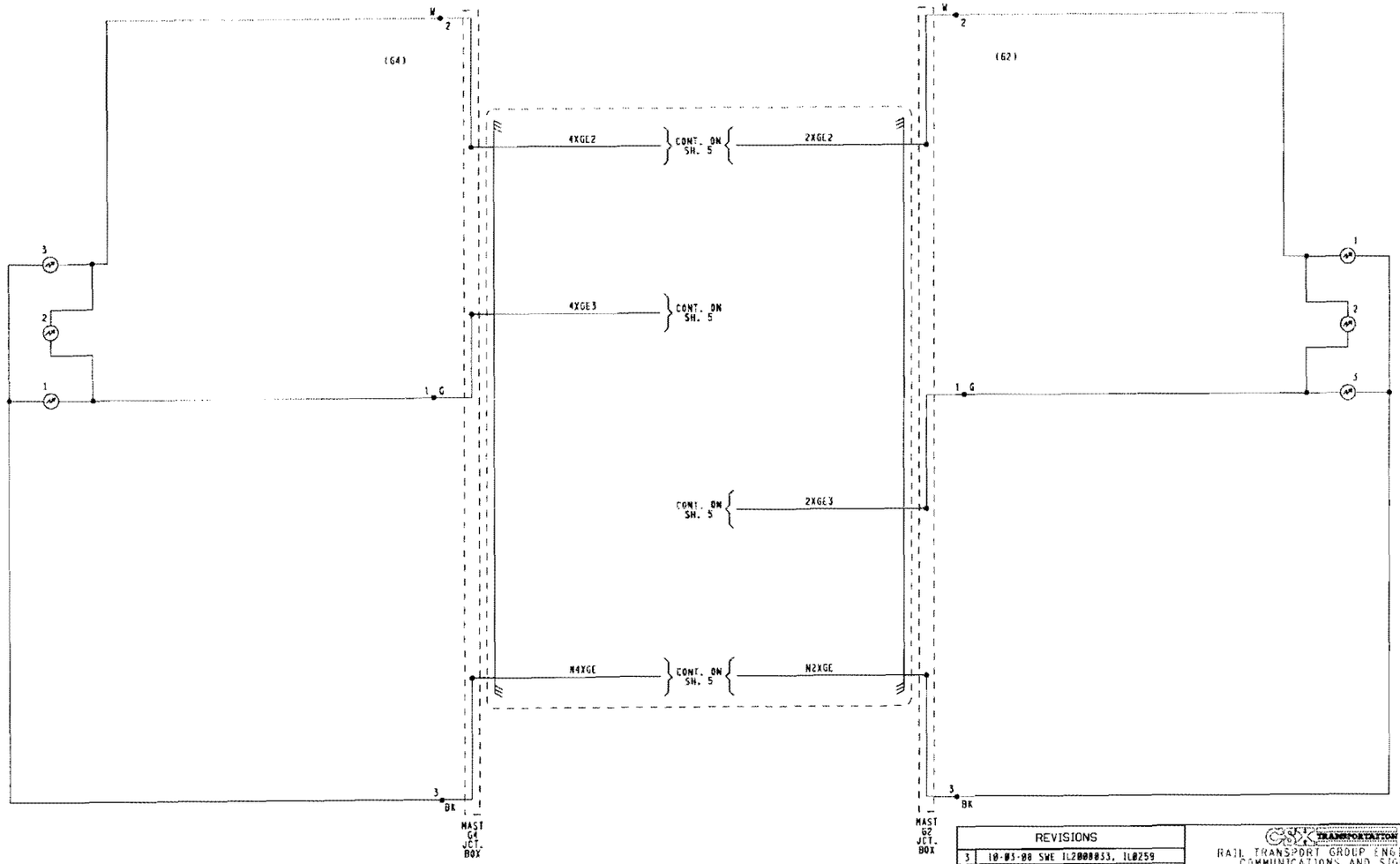

NOTES:
1. (•) = TERMINAL IN JUNCTION BOX
2. WHEN 7 OR MORE LIGHTS ON A SINGLE STRUCTURE REFER TO SS382 FOR REQUIRED ARRESTERING
3. UNLESS NOTED ALL OTHER WIRING #16

REV.3

( ) = EXISTING

NEW WORK
CX00021993 IL2008033
10-03-08 SWE/CDT/TMJ
Southwest Signal Engineering Co.

REVISIONS	
3	10-03-08 SWE IL2008033, IL0259

CSX TRANSPORTATION
RAIL TRANSPORT GROUP ENGINEERING
COMMUNICATIONS AND SIGNALS

CP 72 TO END OF CSX TRACK
MAIN STREET (541964V)
CROSSING WARNING DEVICE LIGHT CIRCUITRY
PARIS, IL M.P. QSD-90.59

DESIGNED	DIGITIZED	CHECKED	DATE
SWE/CDT	SWE/TS	SWE	10-03-08

DRAWING	SHEET NO	NEXT SH	NEXT FILE	NEXT SH	FILE	SHEET
8405-0905	6A	7	-----	-----	QSD09059	C05

LEAVE SPACE FOR RECTIFIER	POR 11 • 7 12 • 1 13 • 1 14 • 1 15 • 1 16 • 1	EOR	XPR	XGNR	XGNPR		
		A62 195	A62 262	A62 205	A62 353		
BPR	1 MSR						
A62 262	A62 262						

RELAY ENERGY LOOPS

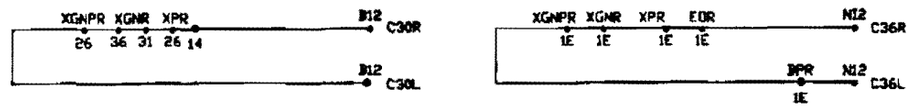

RELAY FUNCTIONS

POR	EOR	XPR	XGNR
12- EBX	12- EX	12- XGN	13-HD-EBX
15- ENX	15- EX	15- XX	15-HD-EBX
22- EBX	32- EX	22-	32- EO
25- ENX	35- EX	25- GC	35- XGNP
32- EBX		32	
35- ENX		35	

XGNPR	BPR	MSR
22-	12- *2HB*	12- XP
25- GC	15- *N2HD*	15
	22	22
	25	25
	32- *891HD*	32
	35- *N891HD*	35

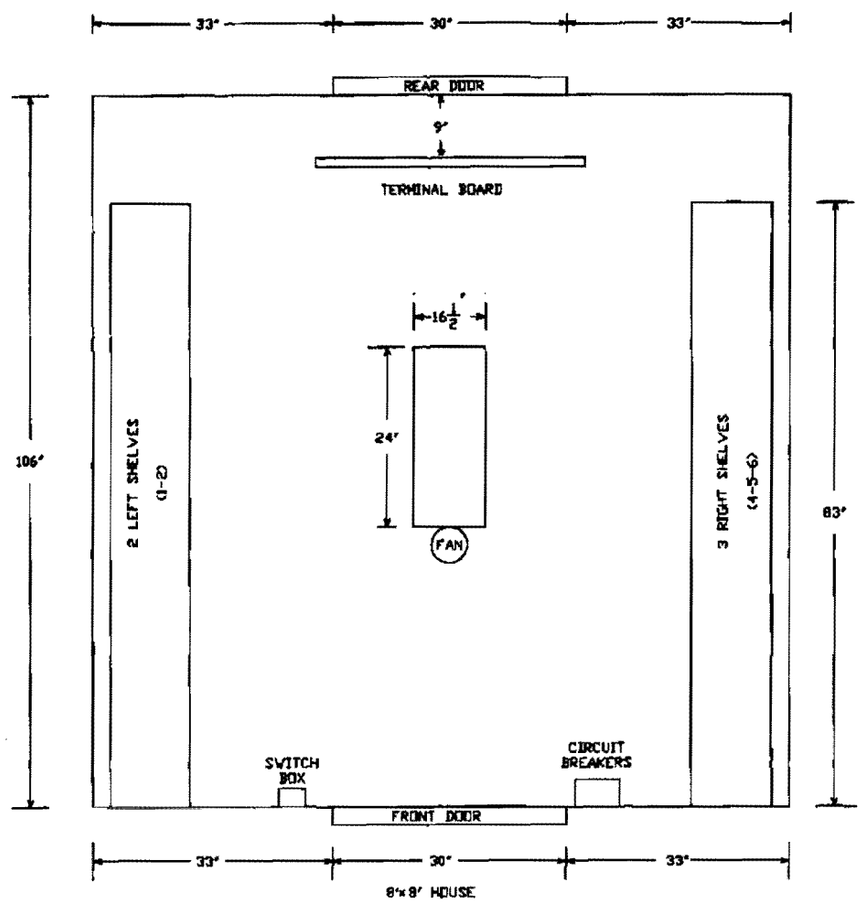

ALL NEW WORK
INSTALL AND CHECK
AS A WHOLE

NO CHANGES
CX08821993 IL2008035
10-03-08 SWE/CDT/
Southwest Signal Engineering Co.

CONRAIL

MAIN STREET, PARIS, IL.

HIGHWAY CROSSING
RELAY RACK AND CONNECTIONS
8 X 8 HOUSE LAYOUT

ISSUE DATE: JANUARY 10, 1986 | 8405-0905
REV. 1 | SHEET 7

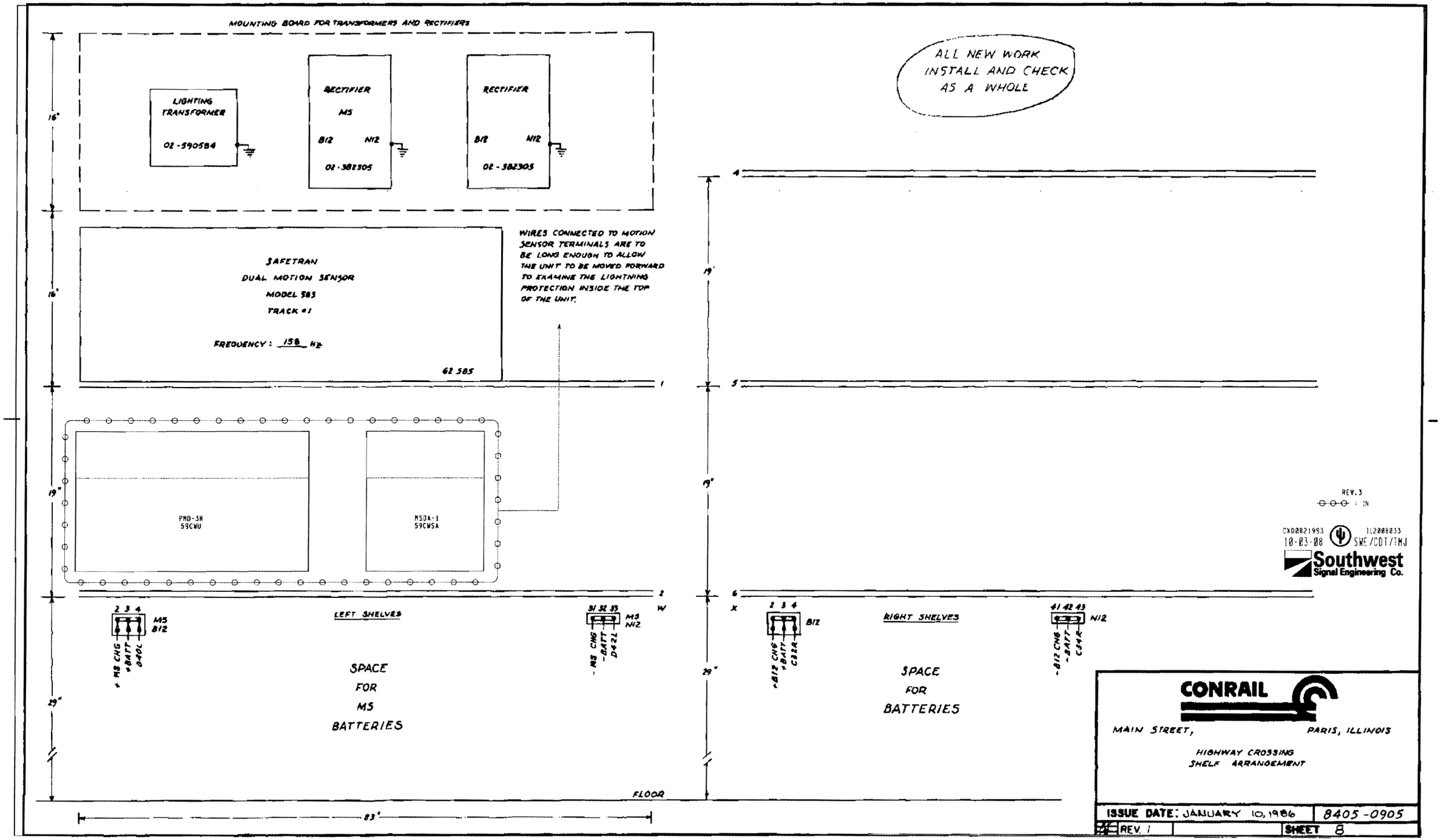
MOUNTING BOARD FOR TRANSFORMERS AND RECTIFIERS
LIGHTING TRANSFORMER
02-590584
RECTIFIER
M5
B12
N12
02-382305
RECTIFIER
B12
N12
02-382305
ALL NEW WORK INSTALL AND CHECK AS A WHOLE
SAFETRAN
DUAL MOTION SENSOR
MODEL 583
TRACK #1
FREQUENCY: 156 Hz
62 585
WIRES CONNECTED TO MOTION SENSOR TERMINALS ARE TO BE LONG ENOUGH TO ALLOW THE UNIT TO BE MOVED FORWARD TO EXAMINE THE LIGHTNING PROTECTION INSIDE THE TOP OF THE UNIT.
PND-3R
59CWU
MSDA-1
59CWSA
16"
16"
19"
19"
19"
29"
29"
83"
FLOOR
LEFT SHELVES
SPACE FOR M5 BATTERIES
M5
B12
+M5 CHG
+BATT
D40L
M5
N12
-M5 CHG
-BATT
D42L
RIGHT SHELVES
SPACE FOR BATTERIES
B12
+B12 CHG
+BATT
C32L
N12
-B12 CHG
-BATT
C34L
REV. 3
CX02821993
10-03-08
TL2888233
SWE/CDT/TMJ
Southwest Signal Engineering Co.
CONRAIL
MAIN STREET, PARIS, ILLINOIS
HIGHWAY CROSSING SHELF ARRANGEMENT
ISSUE DATE: JANUARY 10, 1986
8405-0905
REV. 1
SHEET 8

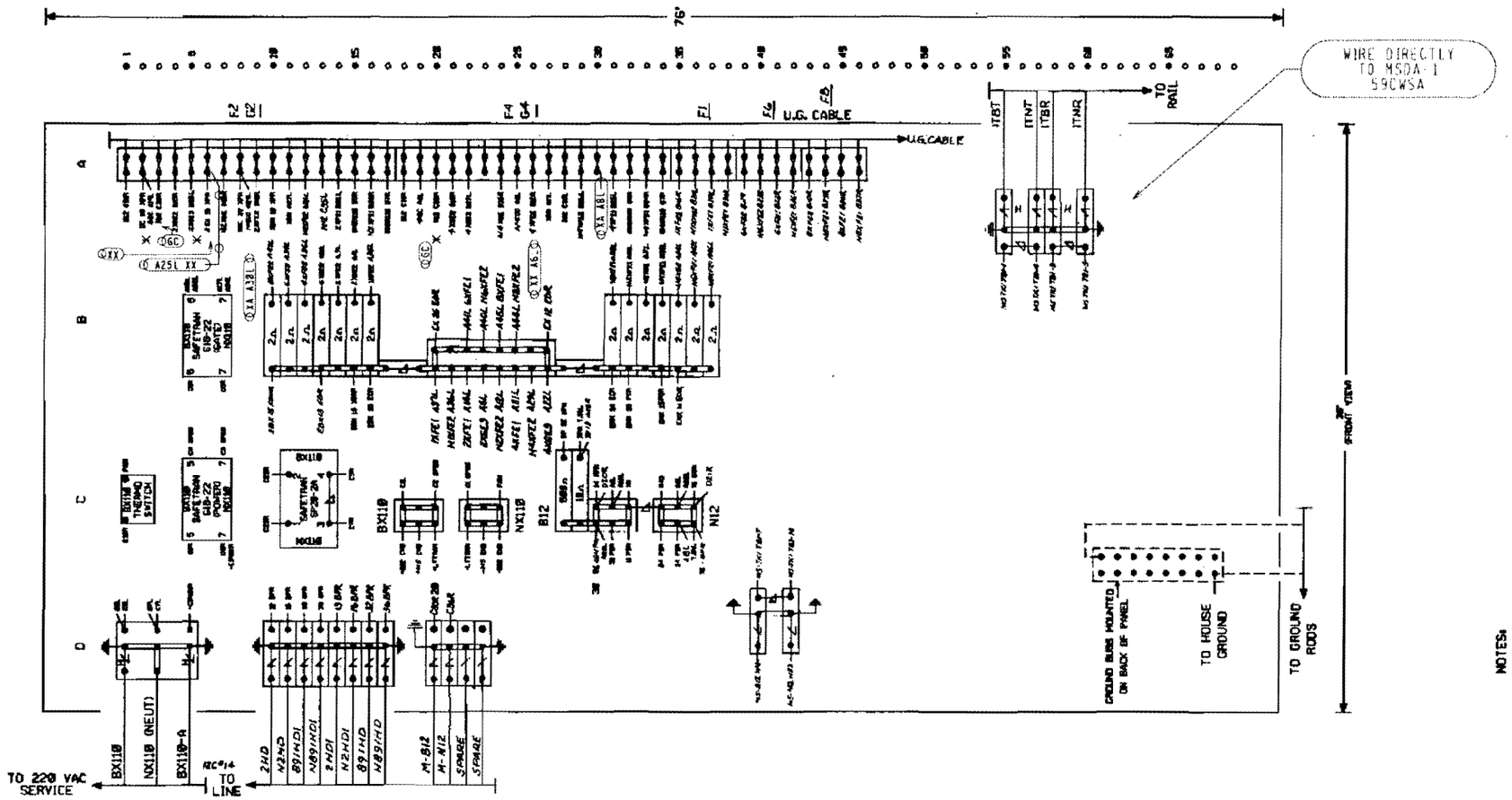
76'
U.G. CABLE
U.G. CABLE
WIRE DIRECTLY TO MSDA-1 59CWSA
TO RAIL
ITBT
ITNT
ITBR
ITNR
BX11B
NX11B
B12
N12
BX11B (NEUT)
BX11B-A
TO 220 VAC SERVICE
TO LINE
2HD
N2HD
89HD1
N89HD1
2HD1
N2HD1
89HD
N89HD
M-B12
M-N12
SPARE
SPARE
GROUND BUSS MOUNTED ON BACK OF PANEL
TO HOUSE GROUND
TO GROUND RODS
FRONT VIEW
NOTES:
2Ω ADJ. 02-425807 - RESISTOR
10Ω FIXED 02-423588 - RESISTOR
500Ω FIXED 02-423711 - RESISTOR
02-837857 - 3 POST PORCELAIN BASE
02-858753 - TERMINAL BLOCK FOR EQUALIZER
02-848757 - TERMINAL STRIP
02-150009 - BUSS LINK
02-286662 - TEST LINK ASSEMBLY
02-825620 - ARRESTOR, HEAVY DUTY
02-825565 - ARRESTOR
02-197958 - EQUALIZER
GROUND CONNECTION TO BE IN ACCORDANCE WITH STANDARD PLAN CS-9801-A
X = DRAFTING ERROR
REV.3
= NOTE
= IN
CX08821993
10-03-08
JL2808833
SWE/CDT/TMJ
Southwest Signal Engineering Co.
CONRAIL
MAIN STREET, PARIS, ILLINOIS
HIGHWAY CROSSING
TERMINAL BOARD ARRANGEMENT
ISSUE DATE: JANUARY 10, 1986
8405-0905
REV. 1
SHEET 9
ALL NEW WORK INSTALL AND CHECK AS A WHOLE
CKD BY
C&S CAD

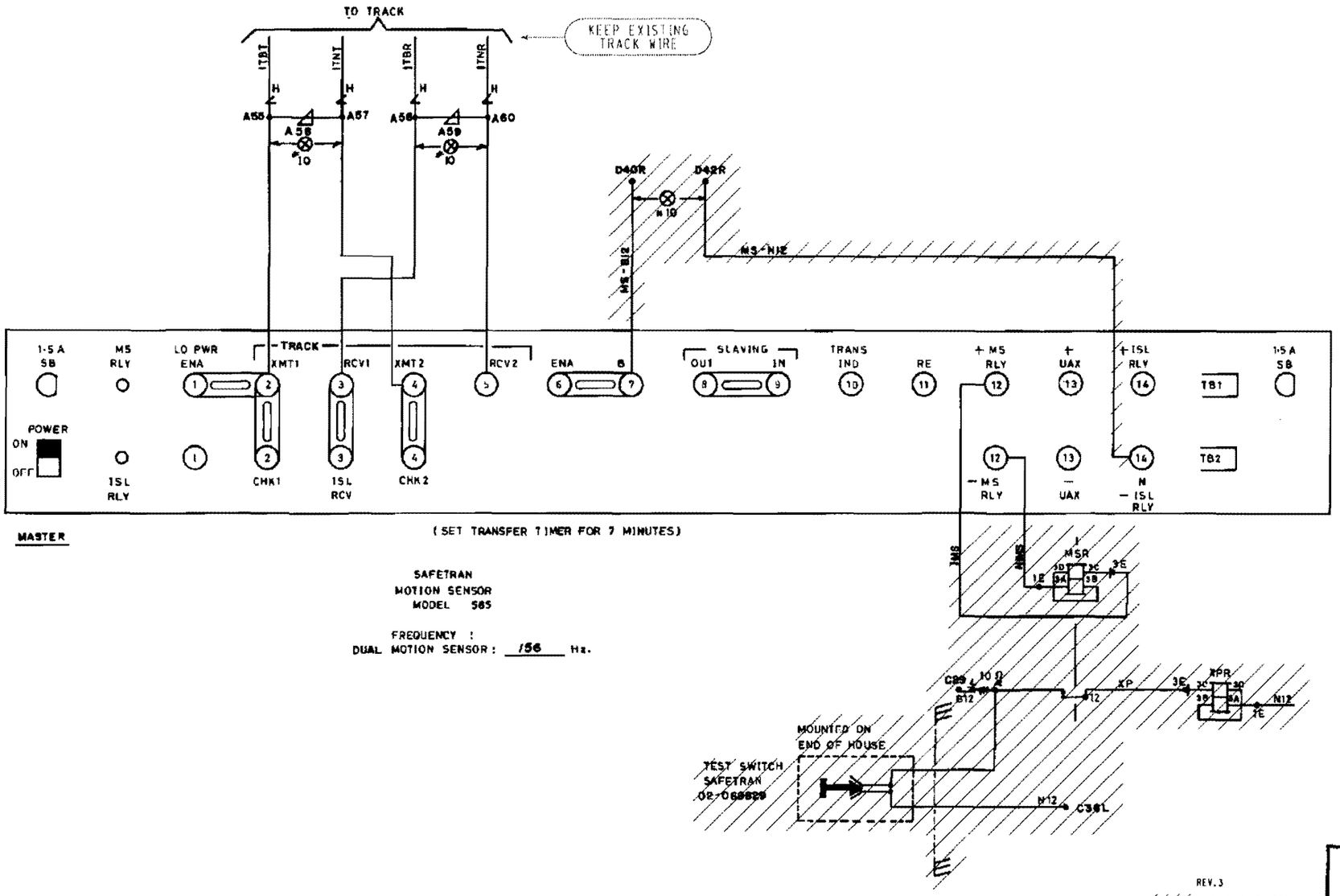

REV. 3

/////: SHOWN ELSEWHERE

ALL ELSE OUT
THIS SHEET IS VOID
WHEN AS IN SERVICED.

CX08821993 IL2008833
10-03-08 SWE/CDT/TMJ

Southwest Signal Engineering Co.

CONRAIL

MAIN STREET, PARIS, ILLINOIS

HIGHWAY CROSSING
MOTION SENSOR CIRCUITS
SAFETRAN M.S. 585

ISSUE DATE: JANUARY 10, 1986	8405-0905
REV. 1	SHEET 4

CONTACT SPACE NO	ASCENDING CLOSES	ASCENDING OPENS	DESENDING CLOSES	DESENDING OPENS	FUNCTIONS OF CONTACTS
1	—	88°	78°	—	UP MOTOR CUT-OUT
2	76°	85°	85°	76°	HOLD CLEAR CONTR.
3	50°	—	—	50°	DOWN MOTOR CUT-OUT
4	—	70°	70°	—	MOTOR CONTROL RELAY CUT-OUT
5	—	5°	5°	—	SNUB RESIS. SHUNT
6	85°	—	—	85°	XGNR CONTROL
7	6°	—	—	6°	BELL CONTROL

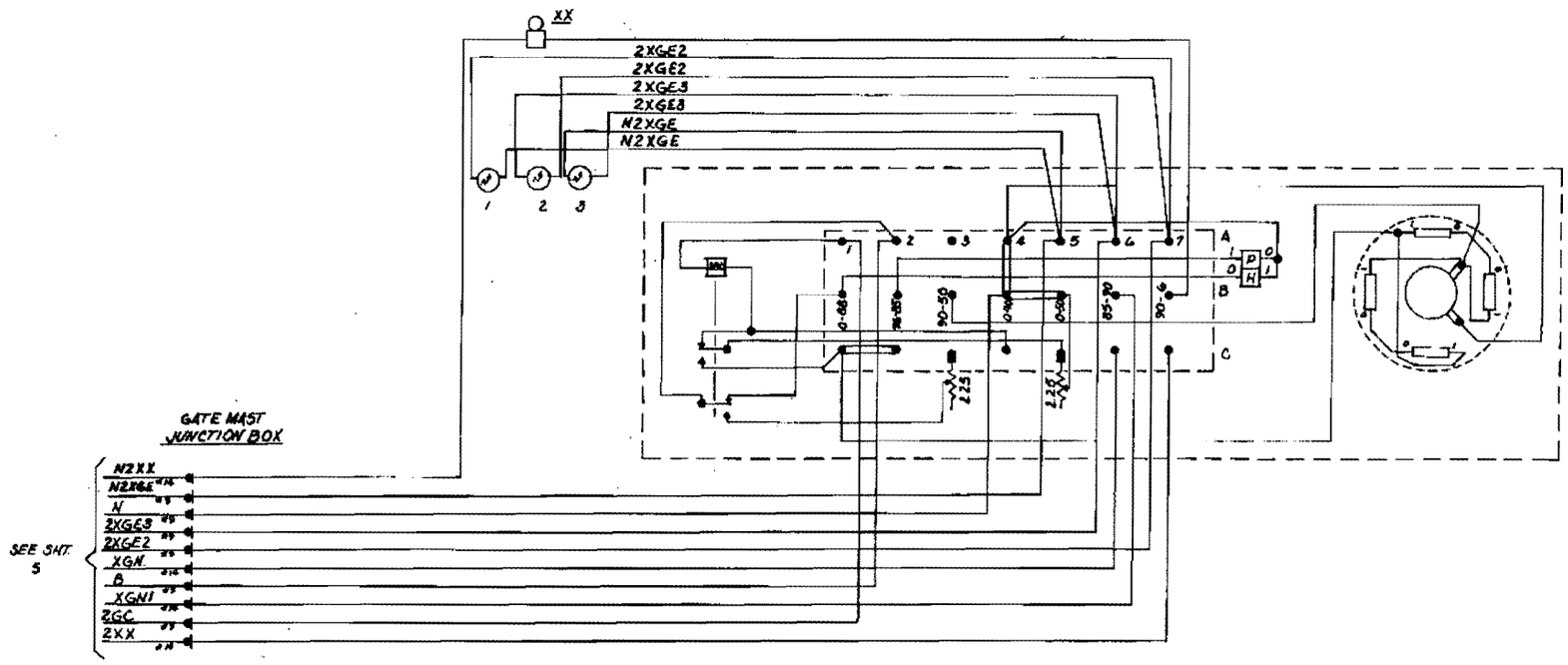

* ON GATE 64 THIS IS PRESENTLY TAGGED AS 1QXP1

▽ - ON GATE 64 THIS IS PRESENTLY TAGGED AS 1GXP

REV. 3
ALL OUT
THIS SHEET IS VOID
WHEN AS IN SERVICE.
CX00321993 IL2008033
10-03-08 SWE/CDT/TMJ

Southwest Signal Engineering Co.

CONRAIL

MAIN STREET, PARIS, ILLINOIS

HIGHWAY CROSSING
GATE MECHANISM

ISSUE DATE: JANUARY 10, 1986 | 8405-0905

REV. 2 | 01-10-07 | SHEET 6

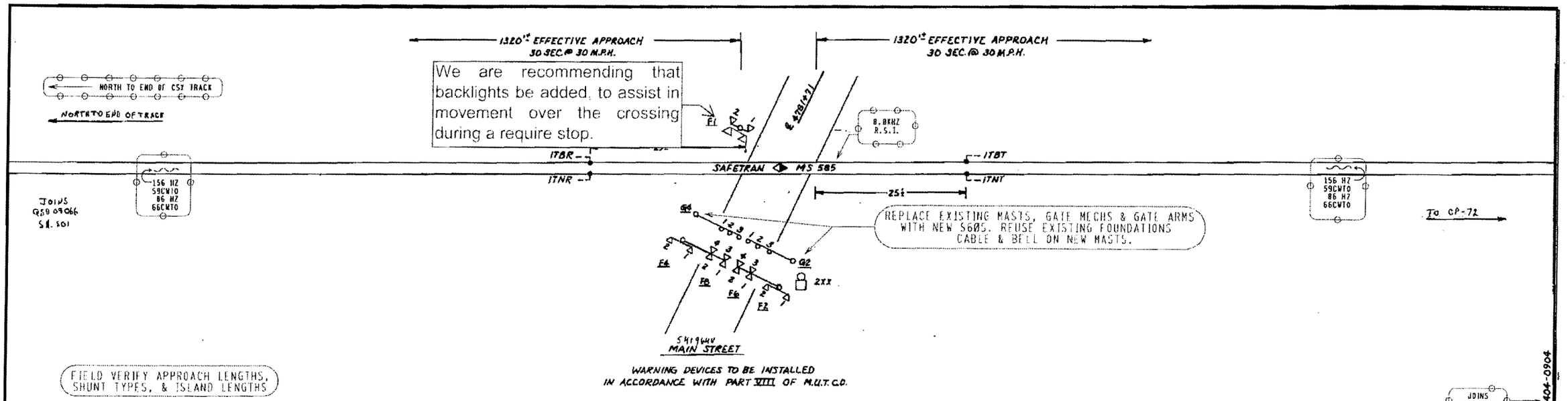

ICC staff recommendation 3/5/09

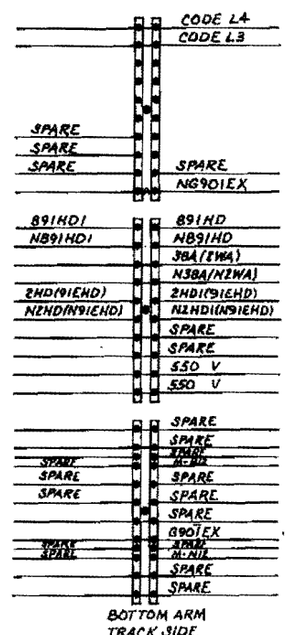

NOTE:
12" LED MAXIMUM CONSUMPTION 1.7A
LED GATE ARM LIGHTS .5A MAXIMUM.

REV. 3
= NOTE
= IN

CXD0821993 10-03-08 IL2008033 SWE/CDT/TMJ

Southwest Signal Engineering Co.

CONRAIL

MAIN STREET, PARIS, IL.

HIGHWAY CROSSING LOCATION PLAN

ISSUE DATE: JANUARY 10, 1986		8405-0905
REV 2	06-10-07	SHEET 2

MAR - 9 2009

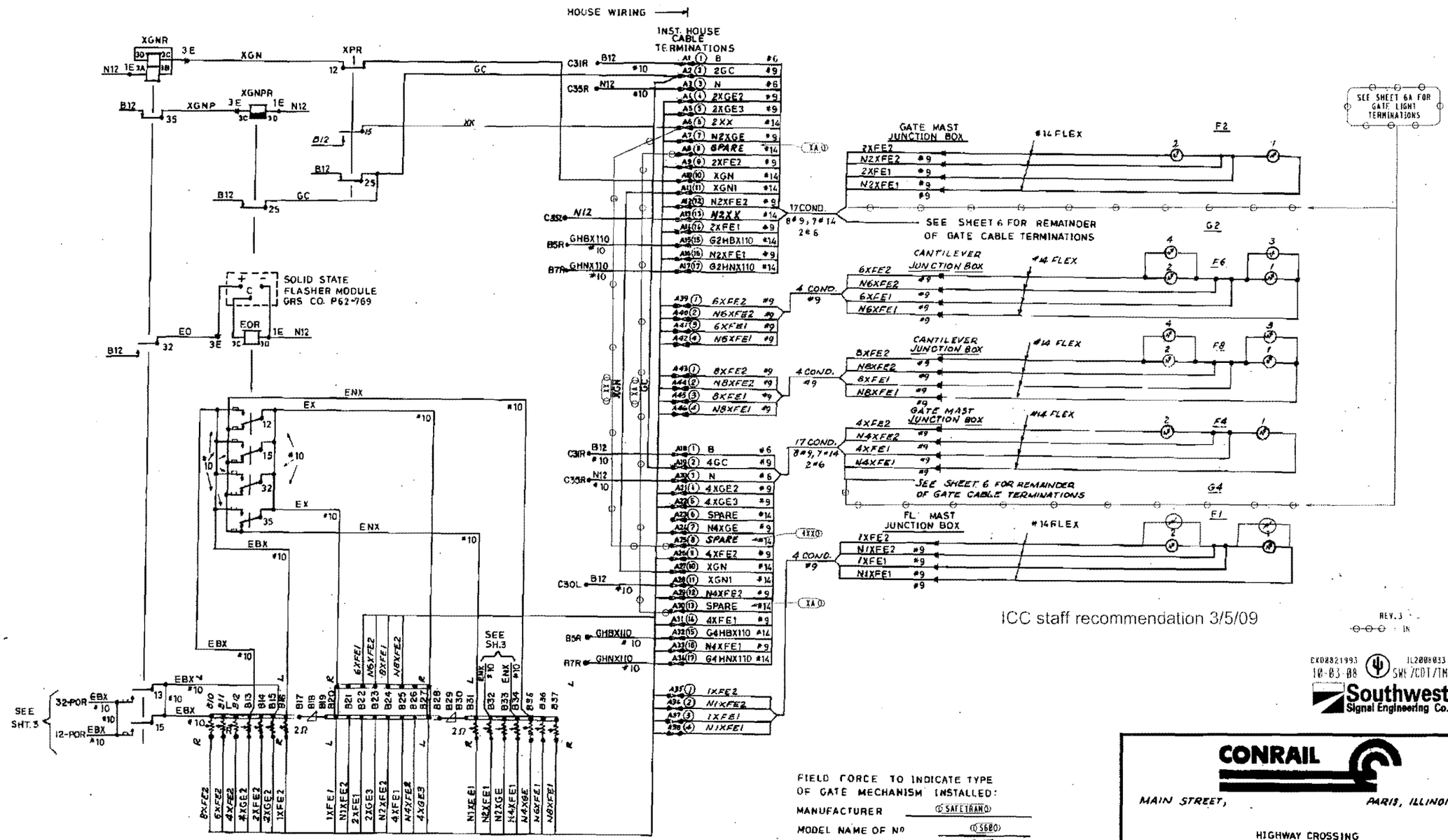

ICC staff recommendation 3/5/09

REV. 3

EXD0821993 IL2008033
10-03-08 SWE/CDT/TMJ

Southwest Signal Engineering Co.

CONRAIL

MAIN STREET, PARIS, ILLINOIS

HIGHWAY CROSSING
GATE CONTROL, LIGHTING CIRCUITS
AND CABLE TERMINATIONS

ISSUE DATE: JANUARY 10, 1986 | 8405-0905

REV. 2 | 01-10-07 | SHEET 5

525-MS1-G