22

RECEIVED
FEB 9 2009
Illinois Commerce Commission
RAIL SAFETY SECTION

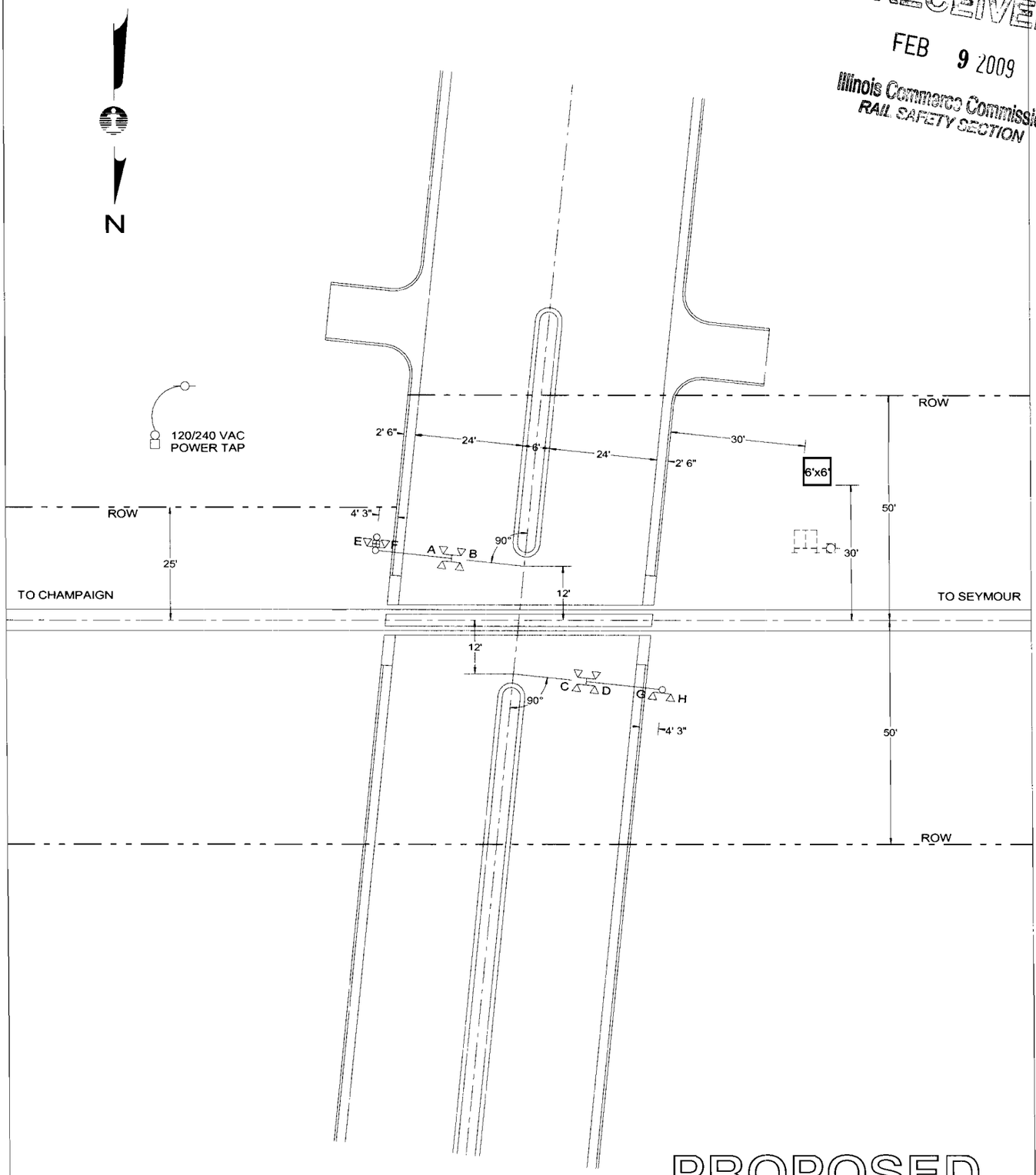

PROPOSED
MAY 5, 2008

PROPOSED SIGNAL WORK

- REMOVE CASE & BATTERY BOX
- INSTALL NEW 6x6 HOUSE (CWT)

QUADRANT	SE	NW
STANDARD AFLS	-	-
CANTILEVER, FT.	17	17
GATE, FT.	-	-
ADDED LIGHTS	-	-
BARRICADE	-	-
MULTI-TK SIGN	-	-
BELL	X	-
REVISIONS		

CN — SIGNALS & COMMUNICATIONS, ENGINEERING DEPARTMENT

CITY & STATE	CHAMPAIGN, IL	SD	1053 X
CROSSING	MATTIS AVE	DATE	AUGUST 6, 2007
IC -	2.16-N	DOT -	291 047W
MIDWEST	DIVISION	CHAMPAIGN	SUBDIVISION
IN SERVICE	12/21/1965	SCALE	1"=30'
DRAWN BY	AVS		

E:\DWG\CHA-SEYMOUR\00216X.CAD

SD 1053 - MP 2 TO MP 3

CWT @ MATTIS AVE

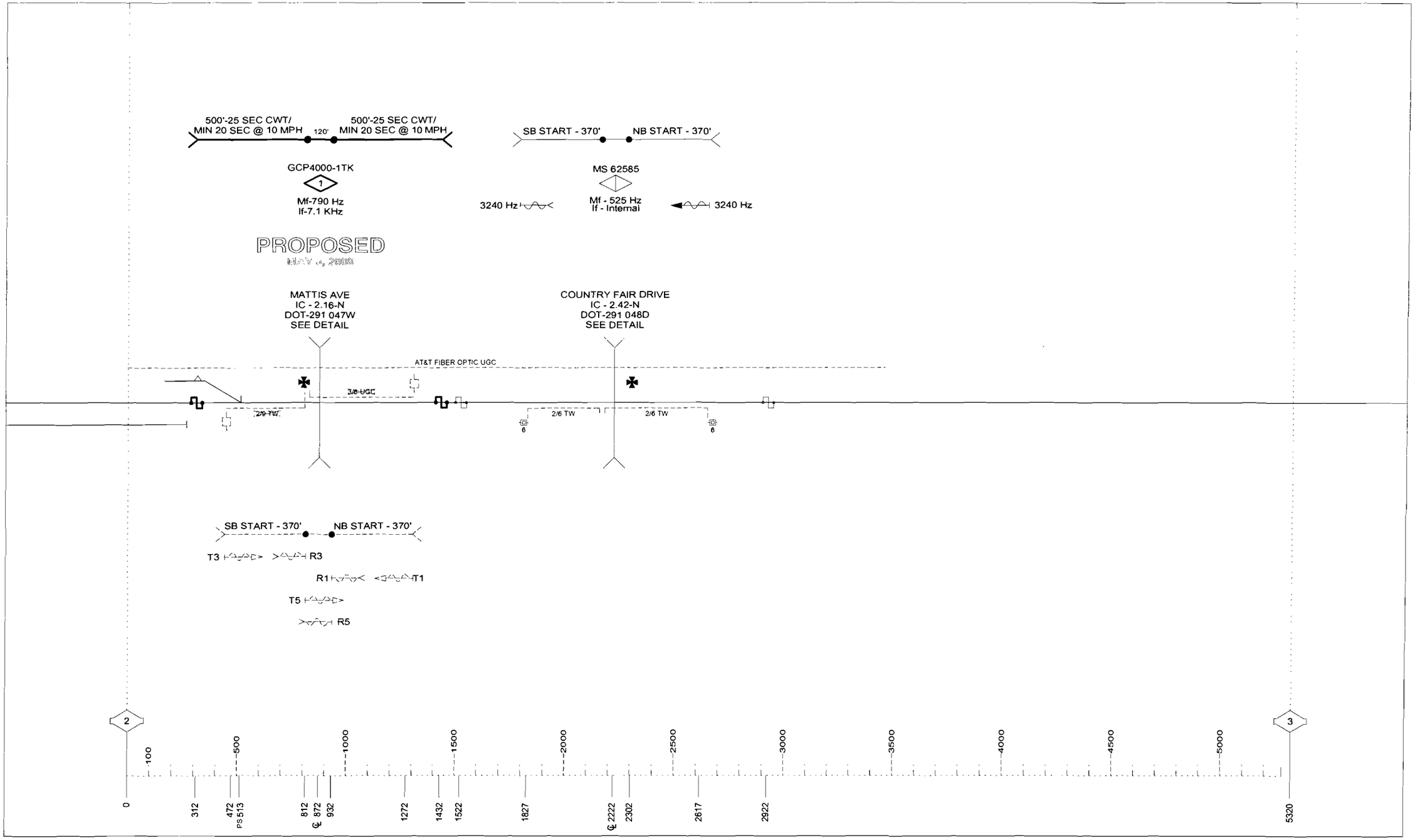

DRAWING SCALE 1" = 500'

8-6-07 1-27-06

WATERMARK

NO.	DATE	BY	DESCRIPTION	APP. BY
1				
2				
3				
4				
5				

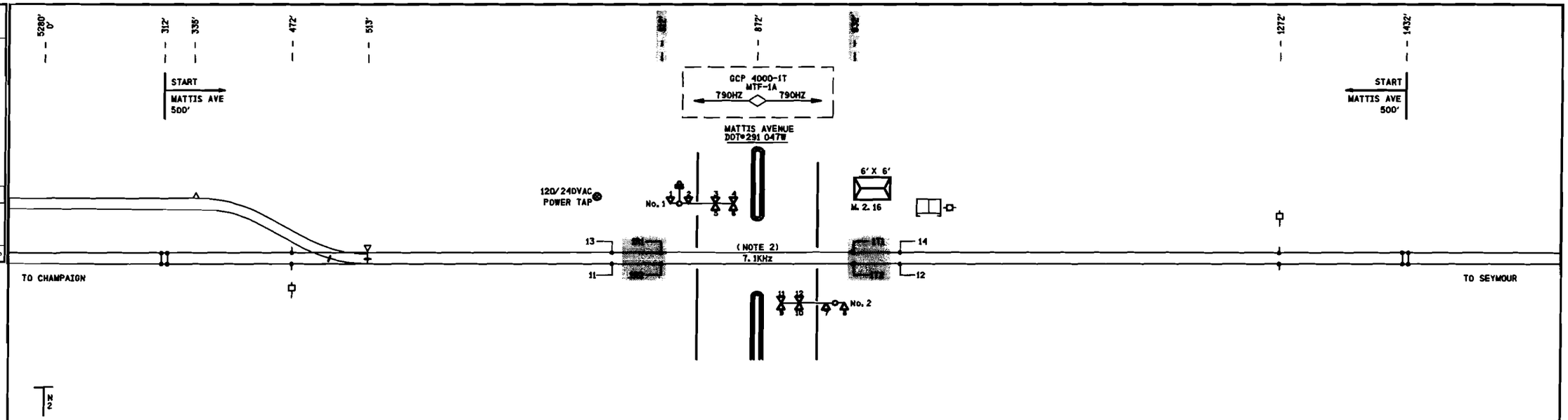

cha-002.16-01.dgn
03-FEB-2009

NOTES:

1) DENOTES #6 HARD WIRE SHUNT
2) ISLAND DISTANCE MINIMUM 120 FT.
3) REUSE CANTILEVERS.

PROPOSED
DES. No. _____
[redacted] YELLOW-OUT
AS INSTALLED
DATE _____
BY _____

6' X 6' BUNGALOW

PROPOSED D	M	Y	REVISIONS	D	C	COMPLETED D	M	Y	C

REGION SOUTHERN
SUB. CHAMPAIGN 341
CN

SIGNALS AND COMMUNICATIONS HOMEWOOD | DES. APL
5 DECEMBER 2008 | CH. RLC

TRACK LAYOUT
MATTIS AVENUE
CHAMPAIGN, IL

CHA-002.16-01

SAFETRAN SYSTEM CORP.
LOUISVILLE DIVISION, LOUISVILLE, KY

15

SAFETRAN SYSTEMS CORPORATION

DES.: APL	DATE: 12/5/08	JOB NO.: P1CA0162	
CKD.: RLC	ISSUE DATE: N/A	EST. NO.:	
DRN.: APL	PLAN NO.: N/A	SHEET 1 OF 15	
P TIME: 08:10	P DATE: 03-FEB-2009	CAD ID.: CHA-002.16-01	

WATERMARK

NO.	DATE	BY	DESCRIPTION	APP. BY
1				
2				
3				
4				
5				

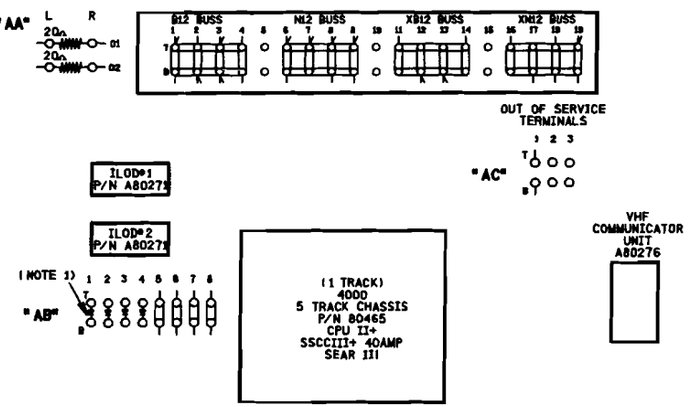

NOTE:

1) DENOTES RECTIFIER : (SAFETRAN# 8008A299006)

SIDE "A"

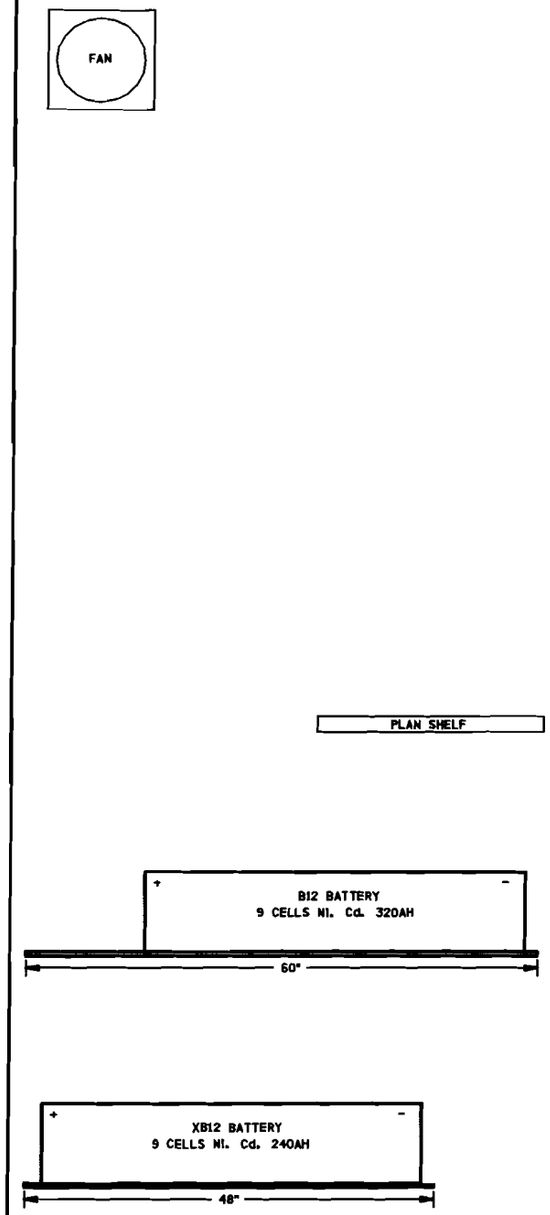

SIDE "B"

PROPOSED
DES. No. _____
RED-IN YELLOW-OUT
AS INSTALLED
DATE _____
BY _____

6' X 6' BUNGALOW

PROPOSED D	M	Y	REVISIONS	D	C	COMPLETED D	M	Y	C

REGION SOUTHERN
SUB. CHAMPAIGN 341
CN

SIGNALS AND COMMUNICATIONS HOMEWOOD | DES. APL
5 DECEMBER 2008 | CH. RLC

BUNGALOW LAYOUT
SIDE "A" & "B"
MATTIS AVENUE
CHAMPAIGN, IL

CHA-002.16-02

SAFETRAN SYSTEM CORP.
LOUISVILLE DIVISION, LOUISVILLE, KY

cha-002.16-02.dgn
03-FEB-2009

SAFETRAN SYSTEMS CORPORATION

DES. : APL	DATE: 12/5/08	JOB NO. : PICA10162	
CKD. : RLC	ISSUE DATE: N/A	EST. NO. :	
DRN. : APL	PLAN NO. : N/A	SHEET 2 OF 15	
P. TIME: 08:10	P. DATE: 03-FEB-2009	CAD ID. : CHA-002.16-02	

WATERMARK

NO.	DATE	BY	DESCRIPTION	APP. BY
1				
2				
3				
4				
5				

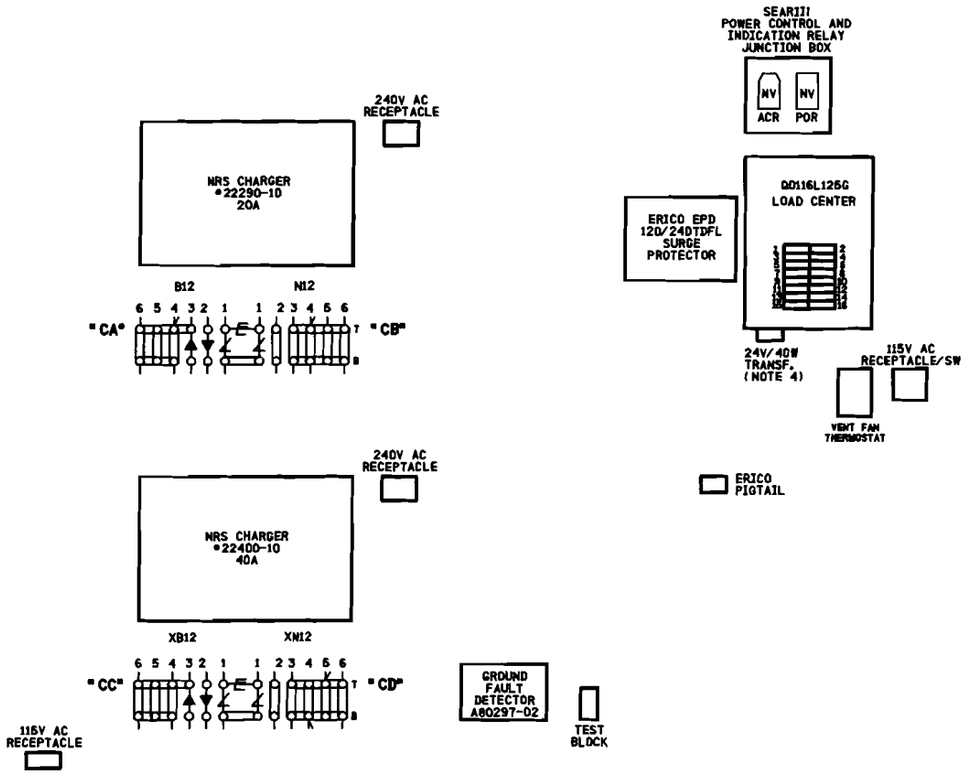

NOTES:

1) ⋕ DENOTES EQUALIZER TYPE: (SAFETRAN #022700-1X)
2) ⊥ DENOTES LIGHTNING ARRESTER TYPE: (SAFETRAN #022585-1X)
3) SURGE PROTECTION SHOULD BE BONDED TO BUNGALOW.
4) 24V-40W TRANSFORMER (CN STOCK #D2-45-367)

SIDE "C"

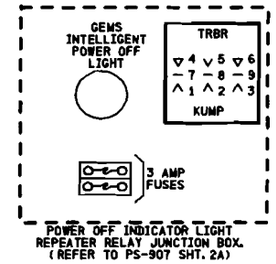

SIDE "D"
ABOVE ENTRY DOOR

cha-002.16-03.dgn
03-FEB-2009

PROPOSED
DES. No. _____
RED-IN YELLOW-OUT
AS INSTALLED
DATE _____
BY _____

6' X 6' BUNGALOW

PROPOSED D	M	Y	REVISIONS	D	C	COMPLETED D	M	Y	C

REGION SOUTHERN
SUB. CHAMPAIGN 341
CN

SIGNALS AND COMMUNICATIONS HOMEWOOD — DES. APL
5 DECEMBER 2008 — CH. RLC

BUNGALOW LAYOUT
SIDE "C" & OVER DOOR SIDE "D"
MATTIS AVENUE
CHAMPAIGN, IL

CHA-002.16-03

SAFETRAN SYSTEM CORP.
LOUISVILLE DIVISION, LOUISVILLE, KY

SAFETRAN SYSTEMS CORPORATION

DES. : APL	DATE: 12/5/08	JOB NO. : PIC410162	
CKD. : RLC	ISSUE DATE: N/A	EST. NO. :	
DRN. : APL	PLAN NO. : N/A	SHEET 3 OF 15	
P TIME: 0811D	P DATE: 03-FEB-2009	CAD ID. : CHA-002.16-03	

WATERMARK

cha-002.16-04.dgn
03-FEB-2009

REVISIONS				
NO.	DATE	BY	DESCRIPTION	APP. BY
1				
2				
3				
4				
5				

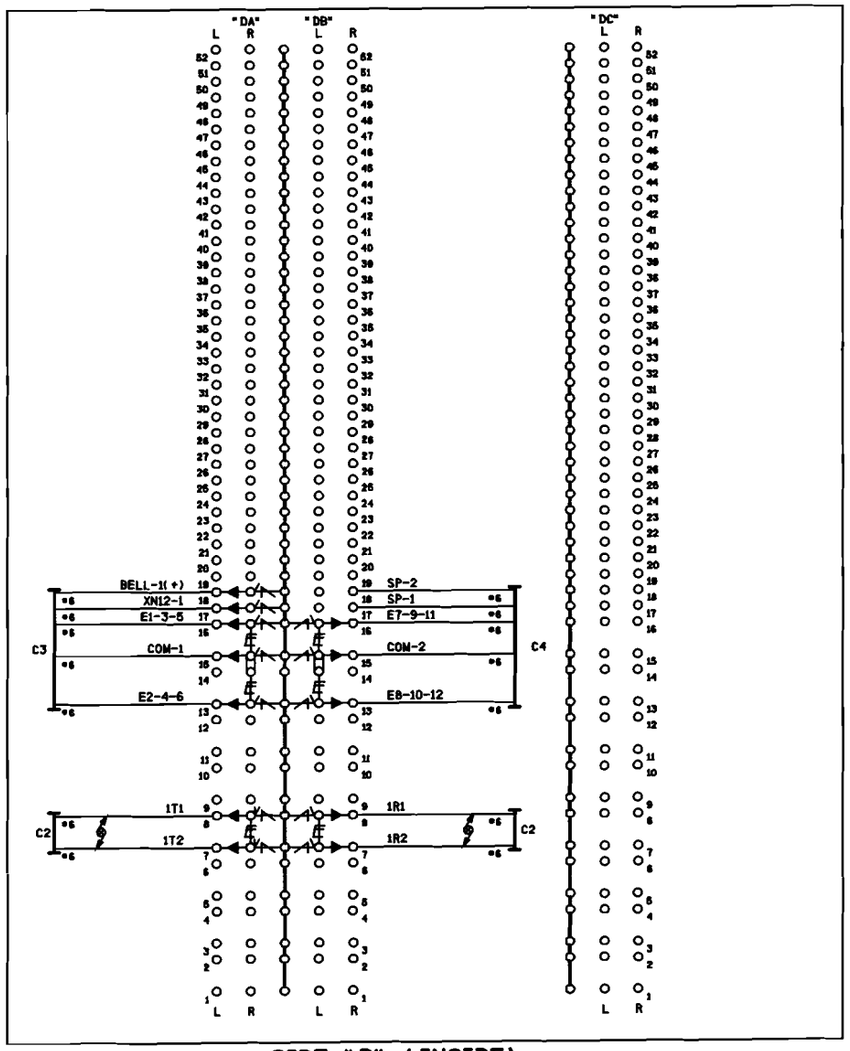

SIDE "D" (INSIDE)

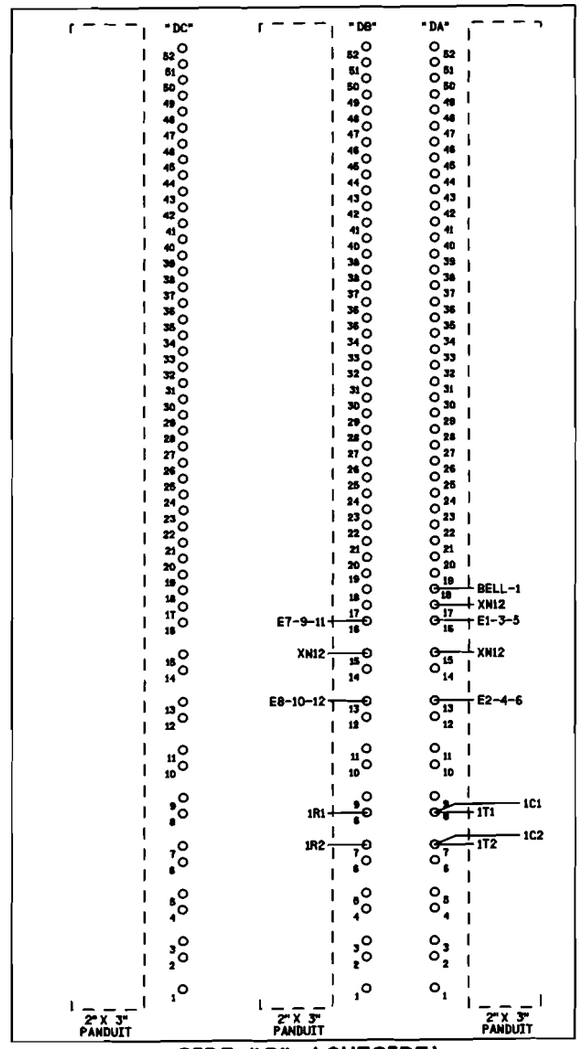

SIDE "D" (OUTSIDE)

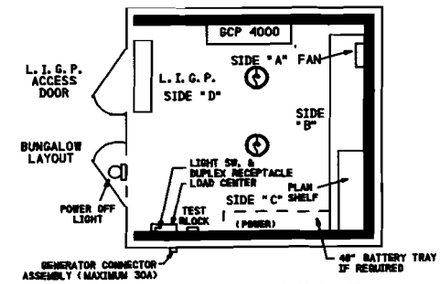

ROOF MOUNTED AC/HEATING UNIT

CABLE CONSIST:

C1-3C#6 TECK 90 U/G TO MAIN SERVICE
C2-(2)-2SC#6 TW. TO TRACK
C3-5C#6 TO CANT (SIG.#1)
C4-5C#6 TO CANT (SIG.#2)

NOTES:

1) DENOTES LIGHTNING ARRESTER TYPE: (SAFETRAN #022585-1X)
2) DENOTES EQUALIZER TYPE: (SAFETRAN #022700-1X)
3) DENOTES TWISTED PAIR.
4) ENSURE DOUBLE NUTTING OF ALL TERMINALS.

PROPOSED
DES. NO. _____
RED-IN YELLOW-OUT
AS INSTALLED
DATE _____
BY _____

6' X 6' BUNGALOW

PROPOSED D	M	Y	REVISIONS	D	C	COMPLETED D	M	Y	C

REGION SOUTHERN
SUB. CHAMPAIGN 341

SIGNALS AND COMMUNICATIONS HOMEWOOD — DES. APL
5 DECEMBER 2008 — CH. RLC

BUNGALOW LAYOUT SIDE "D"
LOW IMPEDIANCE GROUND PLANE
MATTIS AVENUE
CHAMPAIGN, IL

CHA-002.16-04

SAFETRAN SYSTEM CORP.
LOUISVILLE DIVISION, LOUISVILLE, KY

SAFETRAN SYSTEMS CORPORATION		
DES.: APL	DATE: 12/5/08	JOB NO.: PICA10162
CKD.: RLC	ISSUE DATE: N/A	EST. NO.:
DRN.: APL	PLAN NO.: N/A	SHEET 4 OF 15
P TIME: 08:10	P DATE: 03-FEB-2009	CAD ID.: CHA-002.16-04

WATERMARK

cha-002.16-05.dgn
03-FEB-2009

NO.	DATE	BY	DESCRIPTION	APP. BY
1				
2				
3				
4				
5				

NOTE:

1) DISABLE THE DISPLAY HEATER BY REMOVING JUMPER J-22 (LOCATED AT THE EDGE OF THE DISPLAY MODULE CARD THAT PLUGS INTO THE CHASSIS).

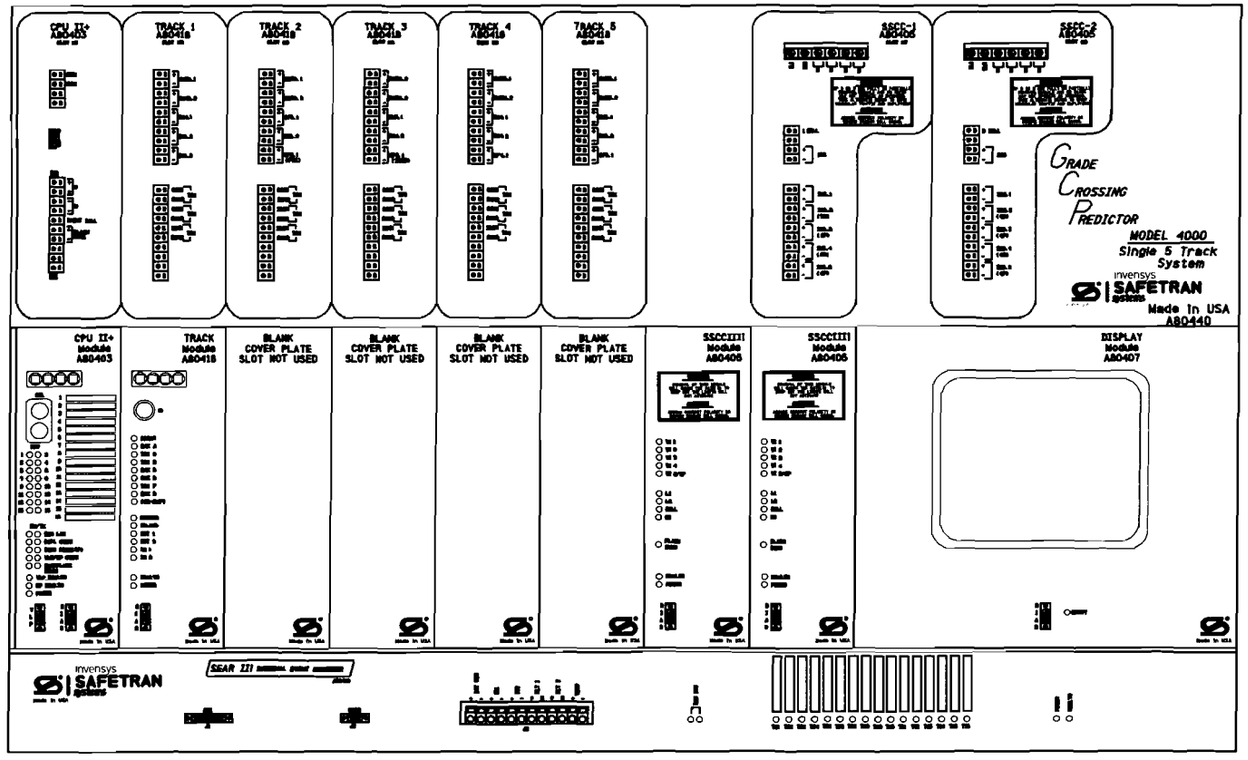

ATTENTION!

ENSURE THE DISPLAY MODULE HEATER IS DISABLED. LEAVING THE DISPLAY HEATER ENABLE WILL REDUCE THE AMOUNT OF BATTERY STANDBY TIME IN THE EVENT OF AN AC POWER FAILURE.

HEATER FUNCTION IS
JUMPER SELECTABLE ON
THE DISPLAY MODULE BOARD.
THREE OPTIONS ARE AVAILABLE.
NORMAL LCD HTR (DEFAULT)
HI CURRENT
NO JUMPER (HEATER DISABLED)

PROPOSED
DES. No. _____
RED-IN YELLOW-OUT
AS INSTALLED
DATE _____
BY _____

6' X 6' BUNGALOW

PROPOSED D	M	Y	REVISIONS	D	C	COMPLETED D	M	Y	C

REGION SOUTHERN
SUB. CHAMPAIGN 341
CN

SIGNALS AND COMMUNICATIONS HOMEWOOD
5 DECEMBER 2006
DES. APL
CH. RLC

GCP 4000
5 TRK CHASSIS & MODULE LAYOUT
MATTIS AVENUE
CHAMPAIGN, IL

CHA-002.16-05

SAFETRAN SYSTEM CORP.
LOUISVILLE DIVISION, LOUISVILLE, KY

SAFETRAN SYSTEMS CORPORATION		
DES.: APL	DATE: 12/5/08	JOB NO.: PICA10162
CKD.: RLC	ISSUE DATE: N/A	EST. NO.:
DRN.: APL	PLAN NO. N/A	SHEET 5 OF 15
P TIME: 08:10	P DATE: 03-FEB-2009	CAD ID.: CHA-002.16-05

WATERMARK

NO.	DATE	BY	REVISIONS DESCRIPTION	APP. BY
1				
2				
3				
4				
5				

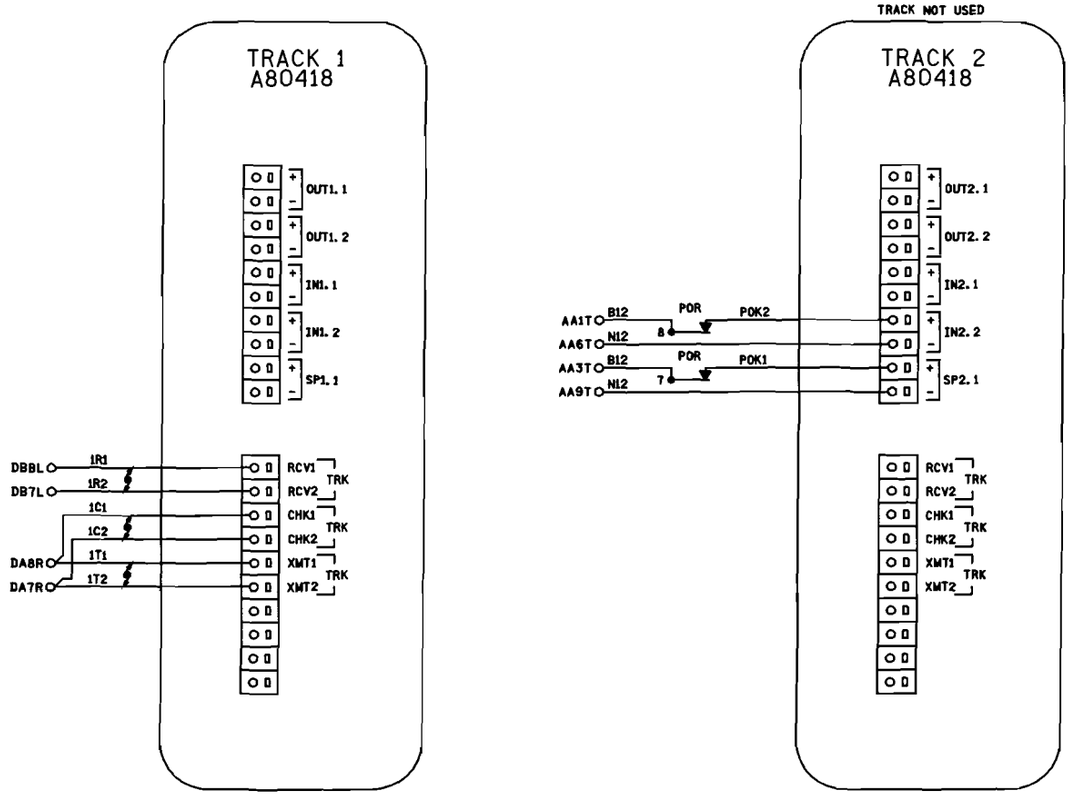

NOTES:

1) ALL WIRING #16 AWG UNLESS OTHERWISE NOTED.

2) DENOTES TWISTED PAIR.

PROPOSED
DES. No. _____
RED-IN YELLOW-OUT
AS INSTALLED
DATE _____
BY _____

6' X 6' BUNGALOW

PROPOSED D	M	Y	REVISIONS	D	C	COMPLETED D	M	Y	C

REGION SOUTHERN
SUB. CHAMPAIGN 341
CN

SIGNALS AND COMMUNICATIONS HOMEWOOD
5 DECEMBER 2008
DES. APL
CH. RLC

GCP 4000
TRACKS 1 & 2 CONNECTIONS
MATTIS AVENUE
CHAMPAIGN, IL

CHA-002.16-06

SAFETRAN SYSTEM CORP.
LOUISVILLE DIVISION, LOUISVILLE, KY

SAFETRAN SYSTEMS CORPORATION

DES. : APL	DATE: 12/5/08	JOB NO. : PICA0152	
CKD. : RLC	ISSUE DATE: N/A	EST. NO. :	
DRN. : APL	PLAN NO. : N/A	SHEET 6 OF 15	
P TIME: 08:10	P DATE: 03-FEB-2009	CAD ID. : CHA-002.16-06	

cha-002.16-06.dgn
03-FEB-2009

WATERMARK

NO.	DATE	BY	DESCRIPTION	APP. BY
1				
2				
3				
4				
5				

REVISIONS

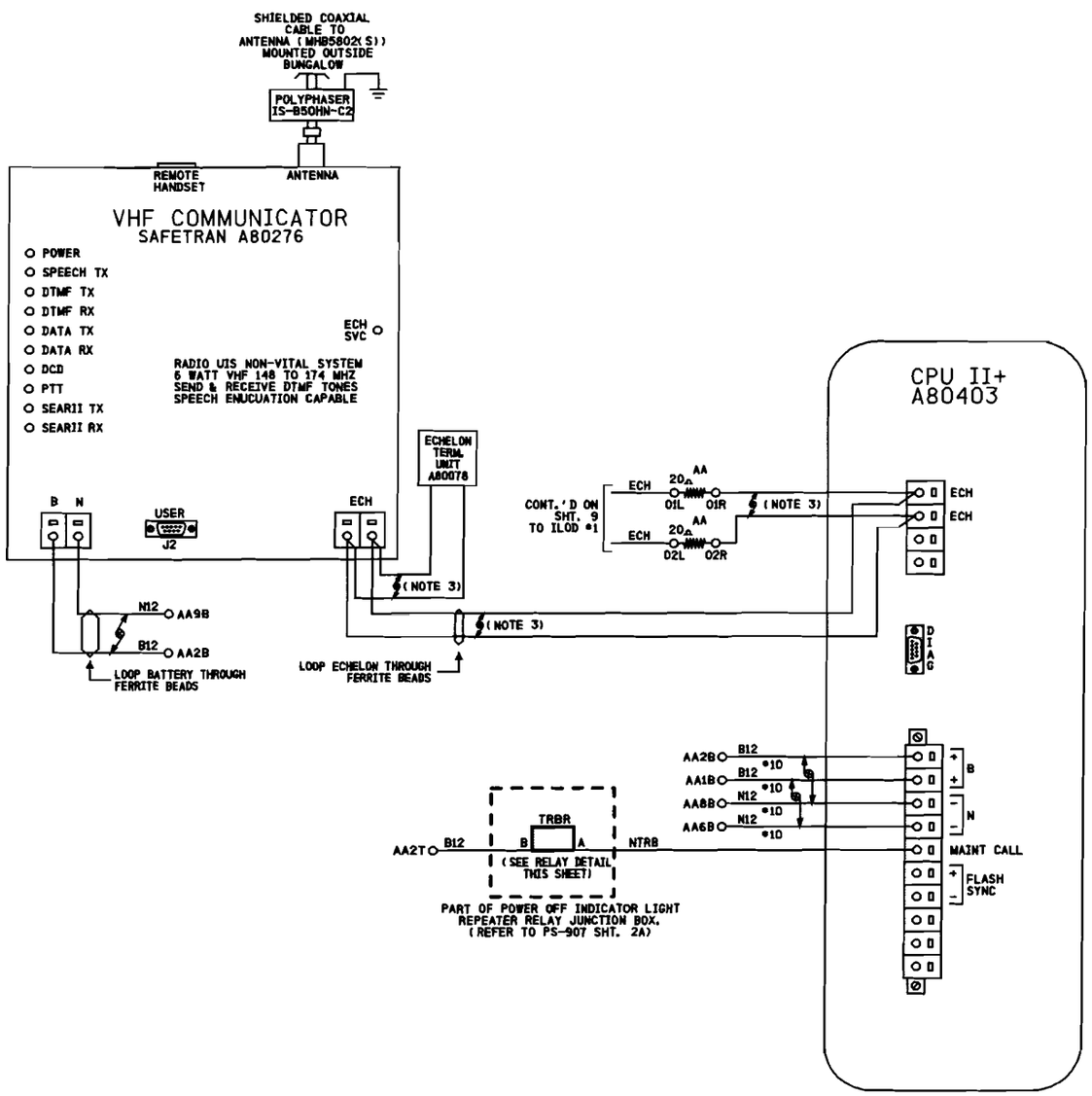

RELAY DETAIL

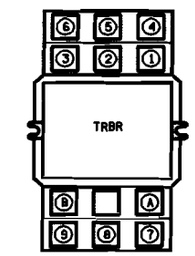

LOCATED OVER ENTRY DOOR

RELAY DETAIL

RELAY - POTTER & BRUMFIELD
MODEL KUMP-14D18-12 SOCKET MOUNTABLE
12 VDC W/ 3 FORM C CONTACTS.

SOCKET - SCREW TERMINAL
MODEL 27E121.

RELAY WIRING DIAGRAM (REAR VIEW)

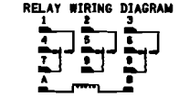

NOTE:
SOCKET NUMBERING CORRESPONDS DIRECTLY WITH RELAY NUMBERING.
(COIL SHOWN ENERGIZED)

NOTES:
1) ALL WIRING #16 AWG UNLESS OTHERWISE NOTED.
2) ⚡ DENOTES TWISTED PAIR.
3) USE BELDEN CABLE, PART #8461-u500-60 FOR ALL ECHELON AND LAN WIRING.

PROPOSED
DES. No. _____
RED-IN YELLOW-OUT
AS INSTALLED
DATE _____
BY _____

6' X 6' BUNGALOW

PROPOSED D	M	Y	REVISIONS	D	C	COMPLETED D	M	Y	C

REGION SOUTHERN
SUB. CHAMPAIGN 341
CN
SIGNALS AND COMMUNICATIONS HOMEWOOD
5 DECEMBER 2006
DES. APL
CH. RLC
GCP 4000
CPUII+ & VHF COMMUNICATOR
MATTIS AVENUE
CHAMPAIGN, IL
CHA-002.16-07

SAFETRAN SYSTEM CORP.
LOUISVILLE DIVISION, LOUISVILLE, KY

SAFETRAN SYSTEMS CORPORATION

DES.: APL	DATE: 12/5/08	JOB NO.: PICAJD162	
CKD.: RLC	ISSUE DATE: N/A	EST. NO.:	
DRN.: APL	PLAN NO.: N/A	SHEET 7 OF 15	
P. TIME: 08:10	P. DATE: 03-FEB-2009	CAD ID.: CHA-002.16-07	

chw-002.16-07.dgn
03-FEB-2009

WATERMARK

cha-002.16-08.dgn
03-FEB-2009

REVISIONS				
NO.	DATE	BY	DESCRIPTION	APP. BY
1				
2				
3				
4				
5				

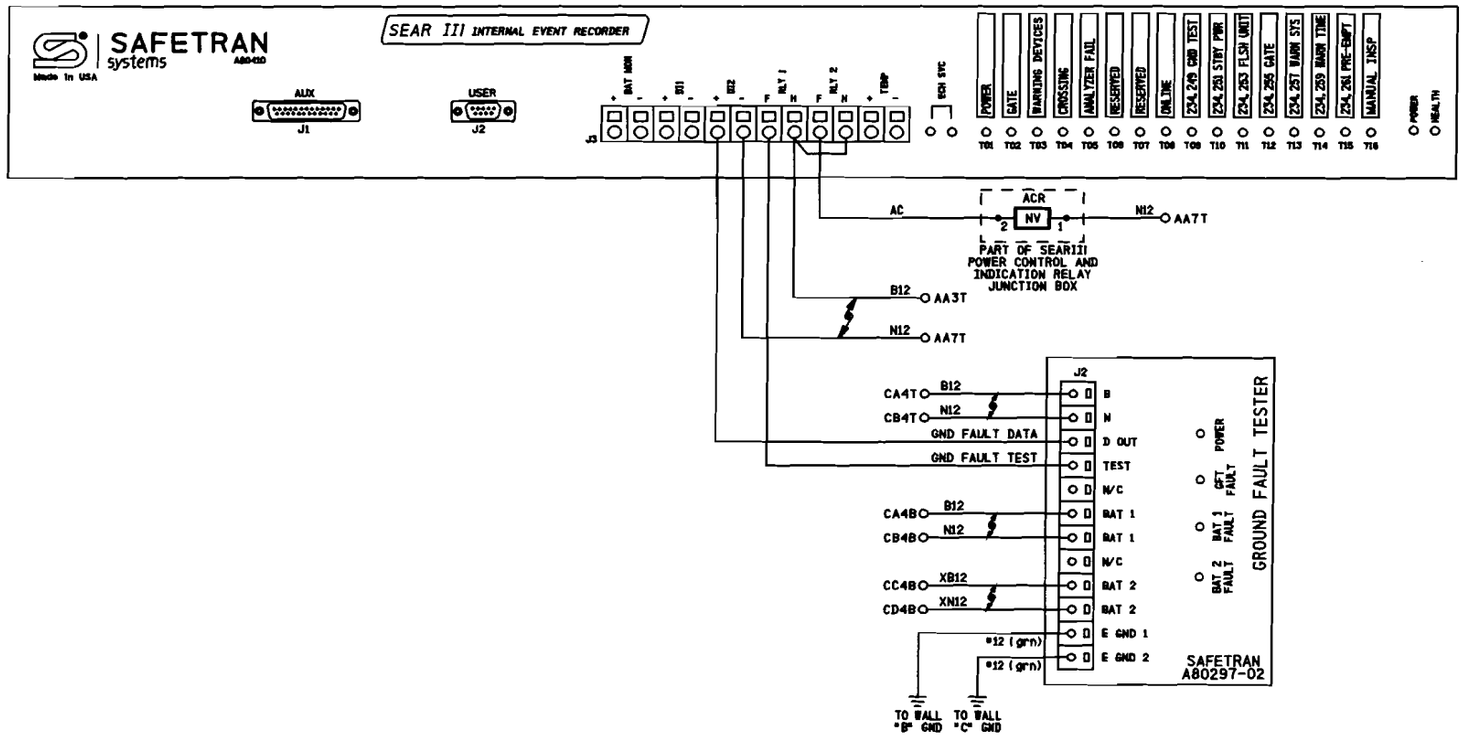

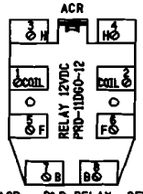

ACR - P&B RELAY, 2FB
(WITH TWO 30A CONTACTS @ 240VAC)
RELAY PART #PRD-11DGO-12

NOTES:
1) ALL WIRING #16 AWG UNLESS OTHERWISE NOTED.
2) ⚡ DENOTES TWISTED PAIR.

PROPOSED
DES. No. _____
RED-IN YELLOW-OUT
AS INSTALLED
DATE _____
BY _____

6' X 6' BUNGALOW

PROPOSED			REVISIONS	D	C	COMPLETED			C
D	M	Y				D	M	Y	

REGION SOUTHERN
SUB. CHAMPAIGN 341
CN

SIGNALS AND COMMUNICATIONS HOMEWOOD
DES. APL
5 DECEMBER 2008
CH. RLC

GCP 4000/SEAR III
INTERNAL EVENT ANALYZER WITH GFT
MATTIS AVENUE
CHAMPAIGN, IL

CHA-002.16-08

SAFETRAN SYSTEM CORP.
LOUISVILLE DIVISION, LOUISVILLE, KY

SAFETRAN SYSTEMS CORPORATION

DES.: APL	DATE: 12/5/08	JOB NO.: PICAID162	
CKD.: RLC	ISSUE DATE: N/A	EST. NO.:	
DRN.: APL	PLAN NO. N/A	SHEET 8 OF 15	
P TIME: 08:10	P DATE: 03-FEB-2009	CAD ID.: CHA-002.16-08	

WATERMARK

NO.	DATE	BY	DESCRIPTION	APP. BY
1				
2				
3				
4				
5				

REVISIONS

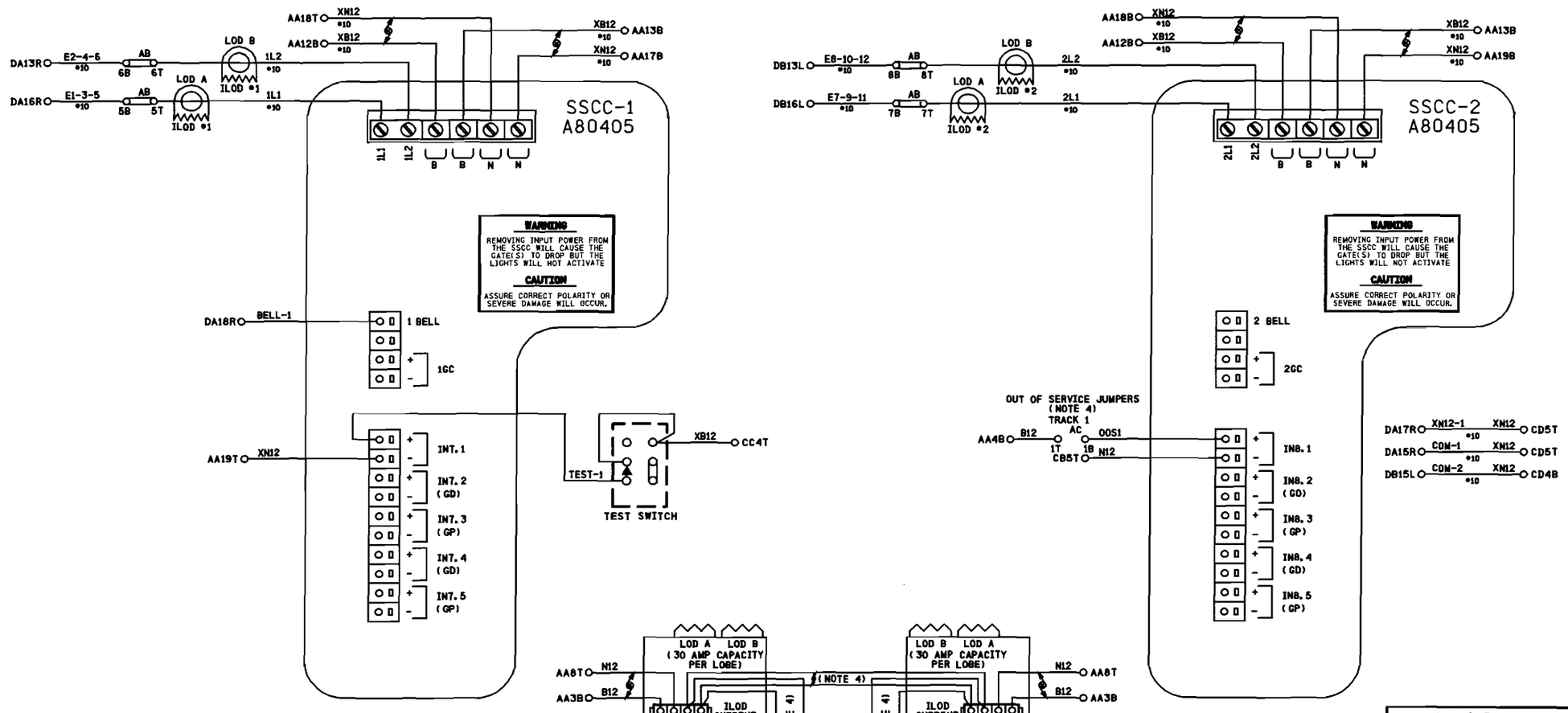

NOTES:

1) DENOTES TWISTED PAIR.

2) ALL WIRING TO BE #16 AWG MINIMUM UNLESS OTHERWISE NOTED.

3) USE BELDEN CABLE, PART #8461-u500-60 FOR ALL ECHELON AND LAN WIRING.

4) TO TAKE TRACK 1 (T1) OUT OF SERVICE, JUMPER AC1T TO AC1B

PROPOSED
DES. No. _____
RED-IN YELLOW-OUT
AS INSTALLED
DATE _____
BY _____

6' X 6' BUNGALOW

PROPOSED D	M	Y	REVISIONS	D	C	COMPLETED D	M	Y	C

REGION SOUTHERN
SUB. CHAMPAIGN 341
CN
SIGNALS AND COMMUNICATIONS HOMEWOOD
DES. APL
5 DECEMBER 2008
CH. RLC
GCP 4000/SSCCIIII
2-20 AMP CONTROLLERS W/ 2 ILODS
MATTIS AVENUE
CHAMPAIGN, IL
CHA-002.16-09

SAFETRAN SYSTEM CORP.
LOUISVILLE DIVISION, LOUISVILLE, KY

SAFETRAN SYSTEMS CORPORATION

DES. : APL	DATE: 12/5/08	JOB NO. : P1CA1016	
CKD. : RLC	ISSUE DATE: N/A	EST. NO. : N/A	
DRN. : APL	PLAN NO. : N/A	SHEET 9 OF 15	
P. TIME: 08:10	P. DATE: 03-FEB-2009	CAD ID. : CHA-002.16-09	

cha-002.16-09.dgn
03-FEB-2009

WATERMARK

cha-002.16-10.dgn
03-FEB-2009

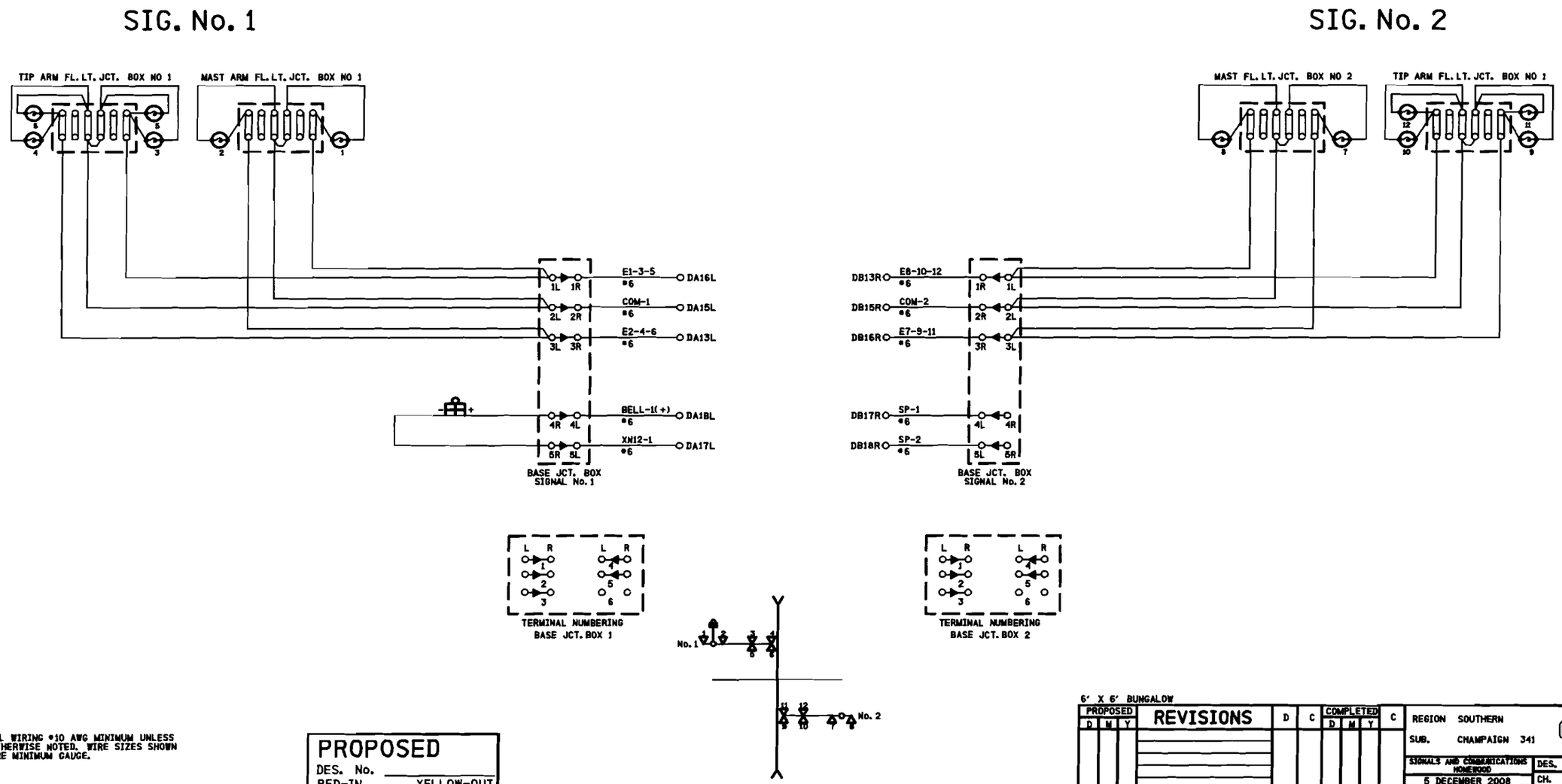

NOTES:

1) ALL WIRING #10 AWG MINIMUM UNLESS OTHERWISE NOTED. WIRE SIZES SHOWN ARE MINIMUM GAUGE.

PROPOSED
DES. No. _____
RED-IN YELLOW-OUT
AS INSTALLED
DATE _____
BY _____

6' X 6' BUNGALOW

PROPOSED D	M	Y	REVISIONS	D	C	COMPLETED D	M	Y	C

REGION SOUTHERN
SUB. CHAMPAIGN 341
SIGNALS AND COMMUNICATIONS HOMEWOOD
5 DECEMBER 2008
DES. APL
CH. RLC
CANTILEVER CONTROL CIRCUITS
MATTIS AVENUE
CHAMPAIGN, IL
CHA-002.16-10
SAFETRAN SYSTEM CORP.
LOUISVILLE DIVISION, LOUISVILLE, KY

NO.	DATE	BY	DESCRIPTION	APP. BY
1				
2				
3				
4				
5				

SAFETRAN SYSTEMS CORPORATION

DES.: APL	DATE: 12/5/08	JOB NO.: PICA10162
CKD.: RLC	ISSUE DATE: N/A	EST. NO.:
DRN.: APL	PLAN NO.: N/A	SHEET 10 OF 15
P TIME: 08:10	P DATE: 03-FEB-2009	CAD ID.: CHA-002.16-10

WATERMARK

NO.	DATE	BY	REVISIONS DESCRIPTION	APP. BY
1				
2				
3				
4				
5				

NOTES:

1) CIRCUIT BREAKER NOT TO EXCEED 60 AMPERES. RETAINING KIT PK4MB2LA MUST BE USED WITH 60A BREAKER.
2) FEEDER CIRCUIT BREAKER, AT STUB POLE SERVICE PANEL, NOT TO EXCEED 60 AMPERES.
3) A SWITCH TRANSFER KIT MUST BE INSTALLED BETWEEN THE SERVICE DISCONNECT BREAKER AND THE GENERATOR HOOK UP.
4) WHERE SEPARATE GROUND WIRE EXISTS BETWEEN THE SERVICE AND THE LOAD CENTER, REMOVE THE BRASS COLORED BONDING SCREW. (REFER TO SCHEMATIC ON BOX COVER FOR EXACT LOCATION)
5) S.C.#6 STRANDED, CSA TYPE R90 (X-LINK)
6) KEEP LEADS AS SHORT AS POSSIBLE
7) THE WHITE CONDUCTOR MUST BE MADE PERMANENTLY UNIDENTIFIABLE BY TAPING THIS CONDUCTOR RED. TAPING MUST BE CONTINUOUS WHERE THE SEPARATE CONDUCTORS HAVE BEEN MADE ACCESSIBLE AND VISIBLE.
8) « DENOTES WAGO TERMINAL

cha-002.16-11.dgn
03-FEB-2009

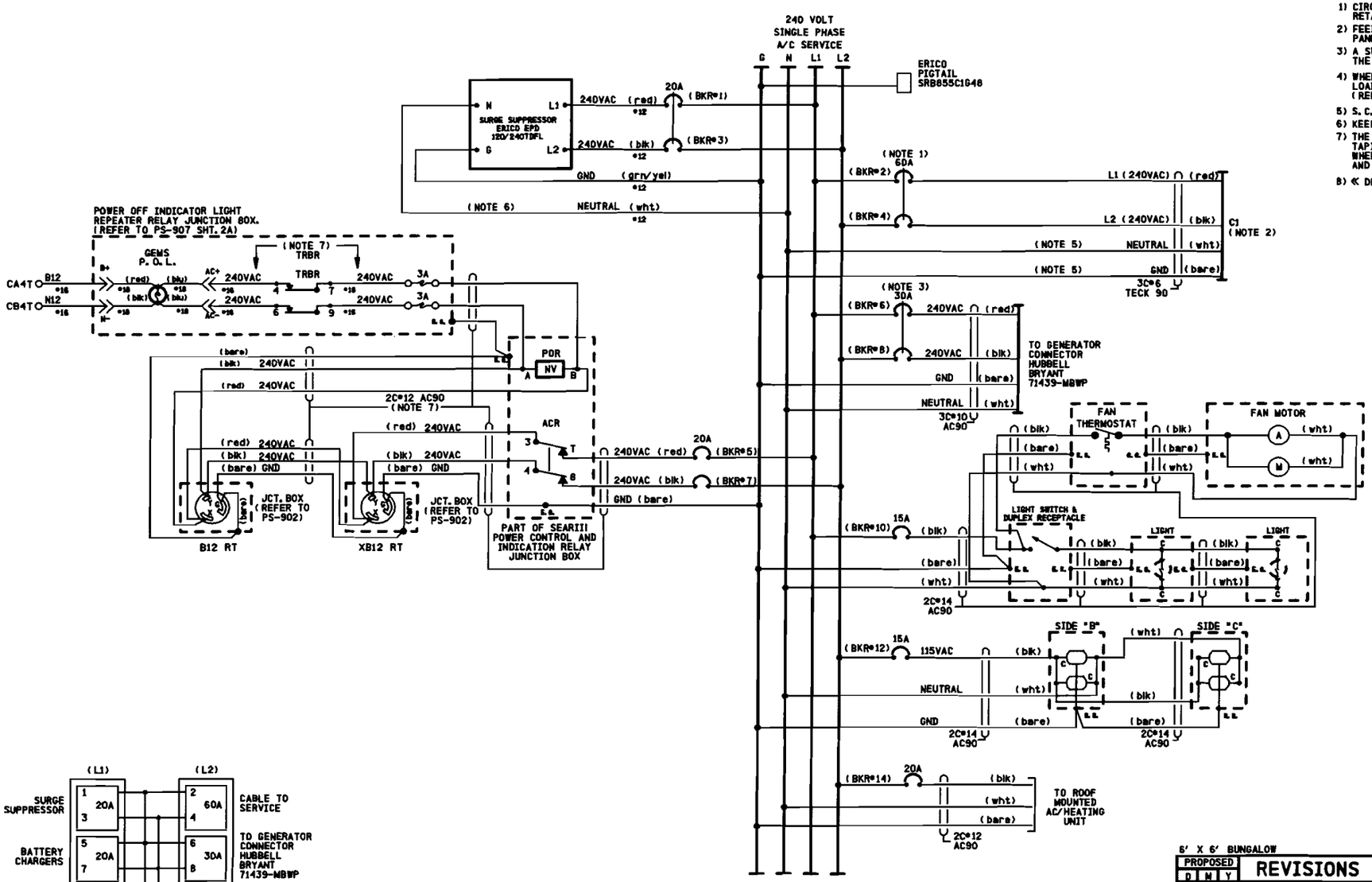

RELAY DETAIL

RELAY - POTTER & BRUMFIELD MODEL KUP-14A15-240 SOCKET MOUNTABLE 240 VDC W/ 3 FORM C CONTACTS.

SOCKET - SCREW TERMINAL MODEL 27E121.

RELAY WIRING DIAGRAM (REAR VIEW)

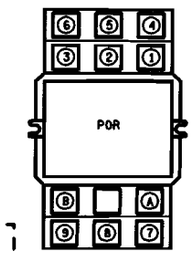

NOTE:
SOCKET NUMBERING CORRESPONDS DIRECTLY WITH RELAY NUMBERING. (COIL SHOWN ENERGIZED)

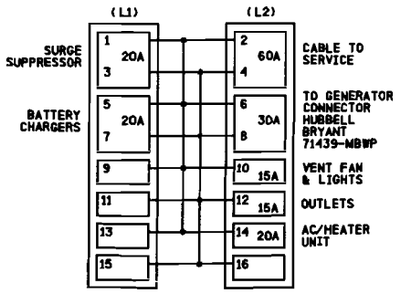

BREAKER POSITIONS

PROPOSED
DES. No. _____
RED-IN YELLOW-OUT
AS INSTALLED
DATE _____
BY _____

6' X 6' BUNGALOW

PROPOSED D	M	Y	REVISIONS	D	C	COMPLETED D	M	Y	C

REGION SOUTHERN
SUB. CHAMPAIGN 341
SIGNALS AND COMMUNICATIONS HOMEWOOD
5 DECEMBER 2008
DES. APL
CH. RLC
POWER DISTRIBUTION
AC
MATTIS AVENUE
CHAMPAIGN, IL
CHA-002.16-11

SAFETRAN SYSTEM CORP.
LOUISVILLE DIVISION, LOUISVILLE, KY

SAFETRAN SYSTEMS CORPORATION

DES.: APL	DATE: 12/5/08	JOB NO.: PICAIDI62	
CKD.: RLC	ISSUE DATE: N/A	EST. NO.:	
DRN.: APL	PLAN NO.: N/A	SHEET 11 OF 15	
P TIME: 08:10	P DATE: 03-FEB-2009	CAD ID.: CHA-002.16-11	

WATERMARK

NO.	DATE	BY	DESCRIPTION	APP. BY
1				
2				
3				
4				
5				

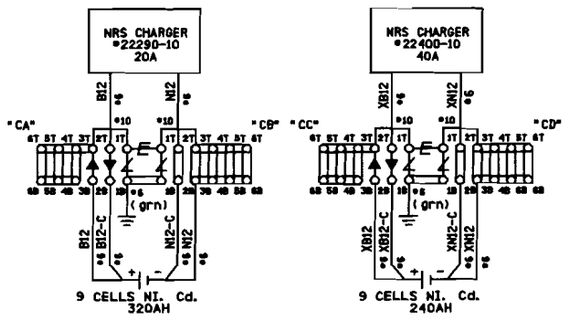

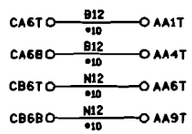

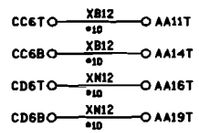

SAFETRAN SYSTEMS CORPORATION	
DES. : APL	DATE: 12/5/08
CKD. : RLC	ISSUE DATE: N/A
DRN. : APL	PLAN NO. :N/A
P. TIME:08:10	P. DATE: 03-FEB-2009
JOB NO. : P1CA10162	
EST. NO. :	
SHEET 12 OF 16	
CAD ID. : CHA-002.16-12	

chp-002.16-12.dgn
03-FEB-2009

PROPOSED
DES. No. _____
RED-IN YELLOW-OUT
AS INSTALLED
DATE _____
BY _____

6' X 6' BUNGALOW

PROPOSED D	M	Y	REVISIONS	D	C	COMPLETED D	M	Y	C

REGION SOUTHERN
SUB. CHAMPAIGN 341
CN

SIGNALS AND COMMUNICATIONS HOMEWOOD | DES. APL
5 DECEMBER 2008 | CH. RLC

POWER DISTRIBUTION
DC
MATTIS AVENUE
CHAMPAIGN, IL

CHA-002.16-12

SAFETRAN SYSTEM CORP.
LOUISVILLE DIVISION, LOUISVILLE, KY

WATERMARK

NO.	DATE	BY	DESCRIPTION	APP. BY
1				
2				
3				
4				
5				

REVISIONS

Program Report

Location and SIN

DOT Number: 291047W
Milepost Number: 2.16
Site Name: Mattis Avenue

SIN: 762010010D16

MCF and Template Selection

MCF Name: GCP-T6X-02-1.mcf
MCF Revision: 021
MCFCRC: 6076E435

Template = 1A:6 Trk BI

Check Numbers

Office Check No. (DT 4.6.0): 776D6F8C
Office Check Number: 776D6F8C
Config. Check Number: 49AA12B0
(Based on MCF Revision 021)

Program

BASIC: module configuration
Track 1 Slot = Track
Track 2/RIO 1 Slot = Not Used
Track 3 Slot = Not Used
Track 4 Slot = Not Used
Track 5/RIO 2 Slot = Not Used
Track 6/RIO 3 Slot = Not Used
SSCC-1 Slot = SSCC31
SSCC-2 Slot = SSCC31
SEAR Used = Yes

BASIC: MS/GCP operation
Track 1 : MS/GCP Operation = Yes

BASIC: Island operation
Track 1 : Island Used = Internal

BASIC: preemption
Preempt Logic = No

BASIC: radio Dax links
Radio DAX link A Used = No
Radio DAX link B Used = No

BASIC: VitalComms links
VitalComms link 1 Used = No
VitalComms link 2 Used = No

PREDICTORS: track 1
Track 1 : Prime Used = Yes
Track 1 : Dax A Used = No
Track 1 : Dax B Used = No
Track 1 : Dax C Used = No
Track 1 : Dax D Used = No
Track 1 : Dax E Used = No
Track 1 : Dax F Used = No
Track 1 : Dax G Used = No

GCP: track 1
Track 1 : GCP Freq Category = Standard
Track 1 : GCP Frequency = 790 Hz
Track 1 : Approach Distance = 500 ft
Track 1 : Uni/Bi/Sim-Bidirni = Bidirni
Track 1 : GCP Transmit Level = High
Track 1 : Island Connection = Isi1
Track 1 : Island Distance = 120 ft
Track 1 : Computed Distance = 9999 ft
Track 1 : Linearization Steps = 100

GCP: track 1 enhanced det
Track 1 : Inbound PS Sensitivity = High
Track 1 : Speed Limiting Used = Yes
Track 1 : Outbound False Act Lvl = Normal
Track 1 : Outbound PS Timer = 20 sec
Track 1 : Trailing Switch Logic = On
Track 1 : Post Joint Detn Time = 15 sec
Track 1 : Adv Appr Predn = No
Track 1 : CancelPickup Delay = This Isl

GCP: track 1 prime
Track 1 : Prime Warning Time = 25 sec
Track 1 : Prime Offset Distance = 0 ft
Track 1 : Switch MS EZ Level = 52
Track 1 : Prime MS/GCP Mode = Pred
Track 1 : Prime Pickup Delay = 30 sec
Track 1 : Prime UAX = Not Used

GCP: track 1 pos start
Track 1 : Positive Start = Off
Track 1 : Sudden Shnt Det Used = No
Track 1 : Low EZ Detection Used = No

GCP: track 1 MS Control
Track 1 : MS/GCP CtrlIP Used = No
Track 1 : MS Sensitivity Level = 0
Track 1 : Compensation Level = 1300
Track 1 : Warn Time-Ballast Comp = High
Track 1 : Low EX Adjustment = 39
Track 1 : Bidirn Dax Passthru = No
Track 1 : False Act on Train Stop = No
Track 1 : EX Limiting Used = Yes
Track 1 : EZ Correction Used = Yes

ISLAND: track 1
Track 1 : IslFrequency = 7.1 kHz
Track 1 : Pickup Delay (2s +) = 0 sec
Track 1 : IslEnable IP Used = No

AND: track Anding
AND 1 XR Used = Yes
AND 2 Used = No
AND 3 Used = No
AND 4 Used = No
AND 5 Used = No
AND 6 Used = No
AND 7 Used = No
AND 8 Used = No

AND: AND 1 XR
AND 1 XR Track 1 = Prime
AND 1 Enable Used = Yes
And 1 Enable Pickup = 0 sec
AND 1 Enable Drop = 0 sec
AND 1 Wrap Used = No

ADVANCED: MS restart
MS/GCP Restart Used = No

ADVANCED: out of service
OOS Control = OOS IPs

ADVANCED: out of service 2
T1 OOS Control = OOS Input 1
T1 OOS Controls = GCP and Island

ADVANCED: track wrap circuits
Wrap LOS Timer = 5 sec
Track 1 Wrap Used = No

ADVANCED: trk 1 overrides
Track 1 : AllPredictors Override Used = No

ADVANCED: OR logic
OR 1 Used = No
OR 2 Used = No
OR 3 Used = No
OR 4 Used = No

ADVANCED: InternalI/O 1
Pass Thrus = No
Int.1 Sets = Not Used
Int.1 Set by = Not Used
Int.2 Sets = Not Used
Int.2 Set by = Not Used
Int.3 Sets = Not Used
Int.3 Set by = Not Used
Int.4 Sets = Not Used
Int.4 Set by = Not Used

ADVANCED: InternalI/O 2
Int.5 Sets = Not Used
Int.5 Set by = Not Used
Int.6 Sets = Not Used
Int.6 Set by = Not Used
Int.7 Sets = Not Used
Int.7 Set by = Not Used
Int.8 Sets = Not Used
Int.8 Set by = Not Used

ADVANCED: InternalI/O 3
Int.9 Sets = Not Used
Int.9 Set by = Not Used
Int.10 Sets = Not Used
Int.10 Set by = Not Used
Int.11 Sets = Not Used
Int.11 Set by = Not Used
Int.12 Sets = Not Used
Int.12 Set by = Not Used

ADVANCED: InternalI/O 4
Int.13 Sets = Not Used
Int.13 Set by = Not Used
Int.14 Sets = Not Used
Int.14 Set by = Not Used
Int.15 Sets = Not Used
Int.15 Set by = Not Used
Int.16 Sets = Not Used
Int.16 Set by = Not Used

ADVANCED: site options
Daylight Sevings = On
Units = Standard
Maint CallRpt IP Used = No
Emergency Activate IP = No
EZ/EX Logging = Change
EZ/EX Point Change = 3

SSCC
Gates Used = No
Min Activation = 20 sec
Rmt Activation Cancel = 3 min
BellOn Gate Rising = No
Mute BellOn Gate Down = No
SSCCIV Controller Used = No

SSCC: 1
SSCC-1 Activation = AND 1 XR
SSCC 1 : Flash Rate = 60
SSCC 1 : Low Battery Detection = No
SSCC 1 : Flash Sync = master
SSCC 1 : Invert Gate Output = No
SSCC 1 : Lamp NeutralTest = Off
Aux-1 Xng CtrlUsed = No

SSCC: 2
SSCC-2 Activation = AND 1 XR
SSCC 2 : Flash Rate = 60
SSCC 2 : Low Battery Detection = No
SSCC 2 : Flash Sync = slave
SSCC 2 : Invert Gate Output = No
SSCC 2 : Lamp NeutralTest = Off
Aux-2 Xng CtrlUsed = No

OUTPUT: assignment page 1
OUT 1.1 = Not Used
OUT 1.2 = Not Used

INPUT: assignment page 1
IN 1.1 = Not Used
IN 1.2 = Not Used

IO: assignment SSCC
OUT GC 1 = Gate Output 1
OUT GC 2 = Gate Output 2
IN 7.1 = AND 1 XR Enable
IN 7.2 = Not Used
IN 7.3 = Not Used
IN 7.4 = Not Used
IN 7.5 = Not Used
IN 8.1 = Out Of Service IP 1
IN 8.2 = Not Used
IN 8.3 = Not Used
IN 8.4 = Not Used
IN 8.5 = Not Used

SEAR
SEAR Subnode = 99
DI 1 = Not Used
DI 2 = Gnd Fit Tester 1
Rly 1 = Ground Fault Test
Rly 2 = AC Control

SEAR: Inputs
SP 2.1 = POK 1
SP 3.1 = Not Used
SP 4.1 = Not Used
SP 5.1 = Not Used
SP 6.1 = Not Used

SEAR: slot 1-4 Inputs
IN 1.1 = Not Used
IN 1.2 = Not Used
IN 2.1 = Not Used
IN 2.2 = POK 2
IN 3.1 = Not Used
IN 3.2 = Not Used
IN 4.1 = Not Used
IN 4.2 = Not Used

SEAR: Inputs slot 5
IN 5.1 = Not Used
IN 5.2 = Not Used

SEAR: Inputs slot 6
IN 6.1 = Not Used
IN 6.2 = Not Used

SEAR: slot 7-8 Inputs
IN 7.2 = Not Used
IN 7.3 = Not Used
IN 7.4 = Not Used
IN 7.5 = Not Used
IN 8.2 = Not Used
IN 8.3 = Not Used
IN 8.4 = Not Used
IN 8.5 = Not Used

SITE: programming
Radio Subnode = 1
Field Password = Off
Low Battery Enabled = Off

Configuration Package File

Filename: 291047W.pac

TEMPLATE MTF-1A

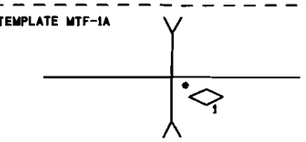

* INDICATES TRACK WITH ISLAND

NOTES:

1) DISTANCE(S) TO BE VERIFIED AT INSTALLATION.
INDICATE SELECTED PROGRAMMED VALUE IF DIFFERENT THAN SHOWN.
REFER TO 4000 GCP INSTRUCTION/INSTALLATION MANUAL
FOR PROGRAMMING PARAMETERS.

2) PROGRAM TEXT HIGHLITED IN RED INDICATES 4000 PROGRAM
MODIFICATIONS TO DEFAULT PROGRAM VALUES.

3) EACH CONSTANT WARNING DEVICE SYSTEM TO BE PROGRAMMED TO
CONVERT TO A MOTION SENSOR 300 FEET FROM EDGE OF ROAD
TRAVELLED WAY.
SHUNT TRACK 300 FEET FROM EDGE OF ROAD TRAVELLED WAY
AND NOTE "EZ" VALUE.
PROGRAM EACH SYSTEM WITH THE INDICATED "EZ" VALUE +2.

4) VERIFY SET TIMER VALUE TO MATCH ACTUAL TRAIN MOVEMENT
WITHIN THE CROSSING APPROACH CIRCUITS.

PROPOSED
DES. No. _____
RED-IN YELLOW-OUT
AS INSTALLED
DATE _____
BY _____

PROPOSED D	M	Y	REVISIONS	D	C	COMPLETED D	M	Y	C

REGION SOUTHERN
SUB. CHAMPAIGN 341
CN

SIGNALS AND COMMUNICATIONS HOMEWOOD | DES. APL
5 DECEMBER 2008 | CH. RLC

GCP 4000
PROGRAM INFORMATION
MATTIS AVENUE
CHAMPAIGN, IL

CHA-002.16-13

SAFETRAN SYSTEM CORP.
LOUISVILLE DIVISION, LOUISVILLE, KY

SAFETRAN SYSTEMS CORPORATION

DES.: APL	DATE: 12/5/08	JOB NO.: PIC410162	
CKD.: RLC	ISSUE DATE: N/A	EST. NO.:	
DRN.: APL	PLAN NO.: N/A	SHEET 13 OF 15	
P TIME: 08:10	P DATE: 03-FEB-2009	CAD ID.: CHA-002.16-13	

cha-002.16-13.dgn
03-FEB-2009

WATERMARK

REVISIONS				
NO.	DATE	BY	DESCRIPTION	APP. BY
1				
2				
3				
4				
5				

TO CONFIGURE SEARII & SEARIII PRESS SITE SETUP KEY. USE ARROW KEYS TO MAKE SELECTION, PRESS ENTER AFTER SELECTION HAS BEEN MADE.

STAGE 1

PROGRAM MENU QUESTIONS	PROGRAM	OPTIONS/RANGE
DATE/TIME?	CURRENT DATE/TIME	CURRENT DATE/TIME
AUTOMATIC DST ADJUSTMENT?	YES	YES, NO
TIME ZONE?	CENTRAL	EASTERN, CENTRAL, MOUNTAIN, PACIFIC, ALASKA, HAWAII, ATLANTIC, SASKATCHEWAN, NEW FOUNLAND
SITE NAME?	MATTIS AVENUE	STREET NAME
MILE POST?	2.16	MILEAGE
DOT/CROSSING IS #?	291 047W	
TESTER TYPE?	CROSSING	CROSSING, WAYSIDE
DATE FORMAT?	dd-mm-yyyy	mm-dd-yyyy, dd-mm-yyyy
TEMPERATURE FORMAT?	FAHRENHEIT	FAHRENHEIT, CELSIUS
SITE TYPE?	NO COM	NO COM, BULLHORN, DIALUP, NODE, COLLECTOR
SITE ATCS ADDRESS?	7.620.100.100.99.01	7.RRR.LLL.GGG.99.01
OFFICE ATCS ADDRESS?		2.RRR.NN.DDDD
(FOR NODE USE) PRIMARY HOP ADDR?		7.RRR.LLL.GGG.00.01
(FOR NODE USE) BACKUP HOP ADDR1?		7.RRR.LLL.GGG.00.01
(FOR NODE USE) BACKUP HOP ADDR2?		7.RRR.LLL.GGG.00.01
(FOR COLLECTOR USE) POLL ID?		1-99
(FOR COLLECTOR USE) MODE?		GEN/ATCS, GENISYS
(FOR COLLECTOR USE) WAMS/XID?		ENABLED, DISABLE
(FOR COLLECTOR USE) OFFICE COMM. DEVICE?		DIRECT (RS232) MCM (RS232) MCM (ECHELON) SREAD SPEC (ECHELON) DIAL MODEM (RS232) S200 RADIO (RS422)
(FOR COLLECTOR USE) OFFICE PHONE NUMBER?		PHONE NUMBER OF WAMS
(FOR COLLECTOR USE) INIT STRING?		OPTIONAL HAYES MODEM INITIALIZATION STRING
FIELD COMM. DEVICE?		VHF COMM. (ECHELON) VHF COMM. (RS232) SPREAD SPEC (ECHELON) SPREAD SPEC (RS232)
USER PORT?	57600, 8, N, 1, N	BAUD, DATA BITS, PARITY, STOP BITS, FLOW CONTROL
AUX PORT?	9600, 8, N, 1, N	BAUD, DATA BITS, PARITY, STOP BITS, FLOW CONTROL

YOU WILL NOW SEE A MESSAGE "PLEASE WAIT COMPILING STAGE 1"
CONTINUE TO NEXT PROGRAM MENU QUESTIONS.

STAGE 2

QUESTION	PROGRAM	SELECTION 1 (MINIMUM)	SELECTION 2 (MAXIMUM)	CONDITION FOR MENU DISPLAY
RESET NAMES / MODULES ?	NO	YES	NO	ALWAYS
RAILROAD NUMBER ?	360	1	999	ALWAYS
CROSSING CONFIGURATION	NORMAL	NORMAL	SPLIT GATE (NOTE 2)	ALWAYS
ENTRANCE GATES ?	0	0	8	ALWAYS
GATE POSTION FAIL TIME (SECONDS) ?	N/A	10	60	GATES > 0
BATTERY BANKS ?	2	1	3	ALWAYS
BATT MON USED ?	NO	NO	YES	ALWAYS
INTERNAL CROSSING CONTROLLERS ?	2	0	2	ALWAYS
EXTERNAL CROSSING CONTROLLERS ?	0	0	2	CROSSING CONTROLLER = YES
VHF COMMUNICATOR ?	YES	YES	NO	ALWAYS
DTMF ACTIVATION?	NO	NO	YES	RAILROAD = 360
ACTIVATION CODE ?	N/A	1	999	VHF COMMUNICATOR = YES
ACTIVATION TIMEOUT ?	N/A	1	600	VHF COMMUNICATOR = YES
ILOD MODULES ?	2	0	4	ALWAYS
ANY LED BULBS USED ?	YES	NO	YES	ILOD MODULES > 0
AUTO INSPECTION ?	NO	YES	NO	ALWAYS
BELL SENSORS ?	0	0	8	ALWAYS
BELL SENSORS TSS1 ?	N/A	NO	YES	BELL SENSORS > 0
BELL SENSORS TSS2 ?	N/A	NO	YES	BELL SENSORS > 0
BELL SENSORS TSS3 ?	N/A	NO	YES	BELL SENSORS > 0
BELL SENSORS TSS4 ?	N/A	NO	YES	BELL SENSORS > 0
BELL SENSORS TSS5 ?	N/A	NO	YES	BELL SENSORS > 0
BELL SENSORS TSS6 ?	N/A	NO	YES	BELL SENSORS > 0
BELL SENSORS TSST ?	N/A	NO	YES	BELL SENSORS > 0
BELL SENSORS TSS8 ?	N/A	NO	YES	BELL SENSORS > 0
BELL ON ?	N/A	GATES LOWERING	GATES MOVING	BELL SENSORS > 0
GFT'S ?	YES	YES	NO	ALWAYS
BATTERIES ON GFT1 ?	2	1	2	GFT'S = YES
GATE TIP SENSORS ?	N/A	YES	NO	GATES > 0
RTU ?	NO	NO	YES	ALWAYS
VHF VOICE CHANNEL ?	1 (NOTE 1)	1	8	VHF COMMUNICATOR = YES
VHF DATA CHANNEL ?	1 (NOTE 1)	1	8	VHF COMMUNICATOR = YES
USE CELL MODEM NON-CRITICAL FEATURE ?	NO	NO	YES	ALWAYS
FULL APPROACH MOVE ALARMS ?	ACTIVATE	ACTIVATE	DO NOT ACTIVATE	ALWAYS

YOU WILL NOW SEE A MESSAGE "PLEASE WAIT COMPILING STAGE 2"
CONTINUE TO NEXT PROGRAM MENU QUESTIONS.

STAGE 3

PROGRAM MENU QUESTIONS	PROGRAM
EDIT DIGITAL INPUTS	NO
EDIT BATTERIES	NO
EDIT RELAYS	NO
EDIT TEST LEDS	NO
EDIT ILOD SENSORS	NO
EDIT VHF SETTINGS	NO
GCP4K ATCS SUBNODE?	16

SAVE CONFIGURATION

NOTES:
1) INDICATE SELECTION IN SPACE PROVIDED.
2) ADDITIONAL OPTIONS: DUAL CROSSING, EXTERNAL ENTRANCE GATE CONTROLLERS.

PROPOSED
DES. No. _____
RED-IN YELLOW-OUT
AS INSTALLED
DATE _____
BY _____

SEARIII EXECUTIVE 9V725 REV. A01U, SEARIII APPLICATION 9V864 REV. A01J

PROPOSED D	M	Y	REVISIONS	D	C	COMPLETED D	M	Y	C

REGION SOUTHERN
SUB. CHAMPAIGN 341
CN
SIGNALS AND COMMUNICATIONS HOMEWOOD
5 DECEMBER 2008
DES. APL
CH. RLC
GCP 4000/SEAR III
SETUP AND PROGRAM
MATTIS AVENUE
CHAMPAIGN, IL
CHA-002.16-14

SAFETRAN SYSTEM CORP.
LOUISVILLE DIVISION LOUISVILLE, KY

SAFETRAN SYSTEMS CORPORATION
DES.: APL DATE: 12/5/08 JOB NO.: PTCA10162
CKD.: RLC ISSUE DATE: N/A EST. NO.:
DRN.: APL PLAN NO.: N/A SHEET 14 OF 15
P TIME: 08:10 P DATE: 03-FEB-2009 CAD ID.: CHA-002.16-14

cha-002.16-14.dgn
03-FEB-2009

WATERMARK

NO.	DATE	BY	REVISIONS DESCRIPTION	APP. BY
1				
2				
3				
4				
5				

CALIBRATION HISTORY

INITIAL SET UP BY: _____ DATE: _____

DC VOLTAGE READINGS AFTER CALIBRATION				CALIBRATION HISTORY										LINEARIZATION HISTORY (NOTE 1)							
				EZ/EX VALUES (TRACK UNOCCUPIED)				HARD WIRE SHUNT AT TERMINATION SHUNT						HARD WIRE SHUNT AT 50 PERCENT POINT OF SHUNT							
				EZ		EX		EZ		EX		50 PERCENT OF EZ VALUE		NO LINEARIZATION				LINEARIZATION COMPLETE			
														EZ		EX		STEP±		EZ	
				NRML	STBY	NRML	STBY	NRML	STBY	NRML	STBY	NRML	STBY	NRML	STBY	NRML	STBY	NRML	STBY	NRML	STBY
T1	Z1=	NORTH	TRACK 1																		
	Z2=	SOUTH	TRACK 1																		

CALIBRATION HISTORY

INITIAL SET UP BY: _____ DATE: _____

DC VOLTAGE READINGS AFTER CALIBRATION				CALIBRATION HISTORY										LINEARIZATION HISTORY (NOTE 1)							
				EZ/EX VALUES (TRACK UNOCCUPIED)				HARD WIRE SHUNT AT TERMINATION SHUNT						HARD WIRE SHUNT AT 50 PERCENT POINT OF SHUNT							
				EZ		EX		EZ		EX		50 PERCENT OF EZ VALUE		NO LINEARIZATION				LINEARIZATION COMPLETE			
														EZ		EX		STEP±		EZ	
				NRML	STBY	NRML	STBY	NRML	STBY	NRML	STBY	NRML	STBY	NRML	STBY	NRML	STBY	NRML	STBY	NRML	STBY
T1	Z1=	NORTH	TRACK 1																		
	Z2=	SOUTH	TRACK 1																		

CALIBRATION HISTORY

INITIAL SET UP BY: _____ DATE: _____

DC VOLTAGE READINGS AFTER CALIBRATION				CALIBRATION HISTORY										LINEARIZATION HISTORY (NOTE 1)							
				EZ/EX VALUES (TRACK UNOCCUPIED)				HARD WIRE SHUNT AT TERMINATION SHUNT						HARD WIRE SHUNT AT 50 PERCENT POINT OF SHUNT							
				EZ		EX		EZ		EX		50 PERCENT OF EZ VALUE		NO LINEARIZATION				LINEARIZATION COMPLETE			
														EZ		EX		STEP±		EZ	
				NRML	STBY	NRML	STBY	NRML	STBY	NRML	STBY	NRML	STBY	NRML	STBY	NRML	STBY	NRML	STBY	NRML	STBY
T1	Z1=	NORTH	TRACK 1																		
	Z2=	SOUTH	TRACK 1																		

NOTE:

1) **SET UP APPROACH LENGTH AND LINEARIZATION CALIBRATION**
VERIFY THAT "ENHANCED DETECTION" MODE IS PROGRAMMED "OFF" BEFORE ATTEMPTING LINEARIZATION PROCEDURES.

PROPOSED
DES. No. _____
RED-IN YELLOW-OUT
AS INSTALLED
DATE _____
BY _____

PROPOSED D	M	Y	REVISIONS	D	C	COMPLETED D	M	Y	C

REGION SOUTHERN
SUB. CHAMPAIGN 341
CN

SIGNALS AND COMMUNICATIONS HOMEWOOD
5 DECEMBER 2008
DES. APL
CH. RLC

GCP 4000
CALIBRATION HISTORY
MATTIS AVENUE
CHAMPAIGN, IL

CHA-002.16-15

15

SAFETRAN SYSTEM CORP.
LOUISVILLE DIVISION, LOUISVILLE, KY

SAFETRAN SYSTEMS CORPORATION

DES.: APL	DATE: 12/5/08	JOB NO.: PTCA10162	
CKD.: RLC	ISSUE DATE: N/A	EST. NO.:	
DRN.: APL	PLAN NO.: N/A	SHEET 15 OF 15	
P TIME: 08:10	P DATE: 03-FEB-2009	CAD ID.: CHA-002.16-15	

cha-002.16-15.dgn
03-FEB-2009

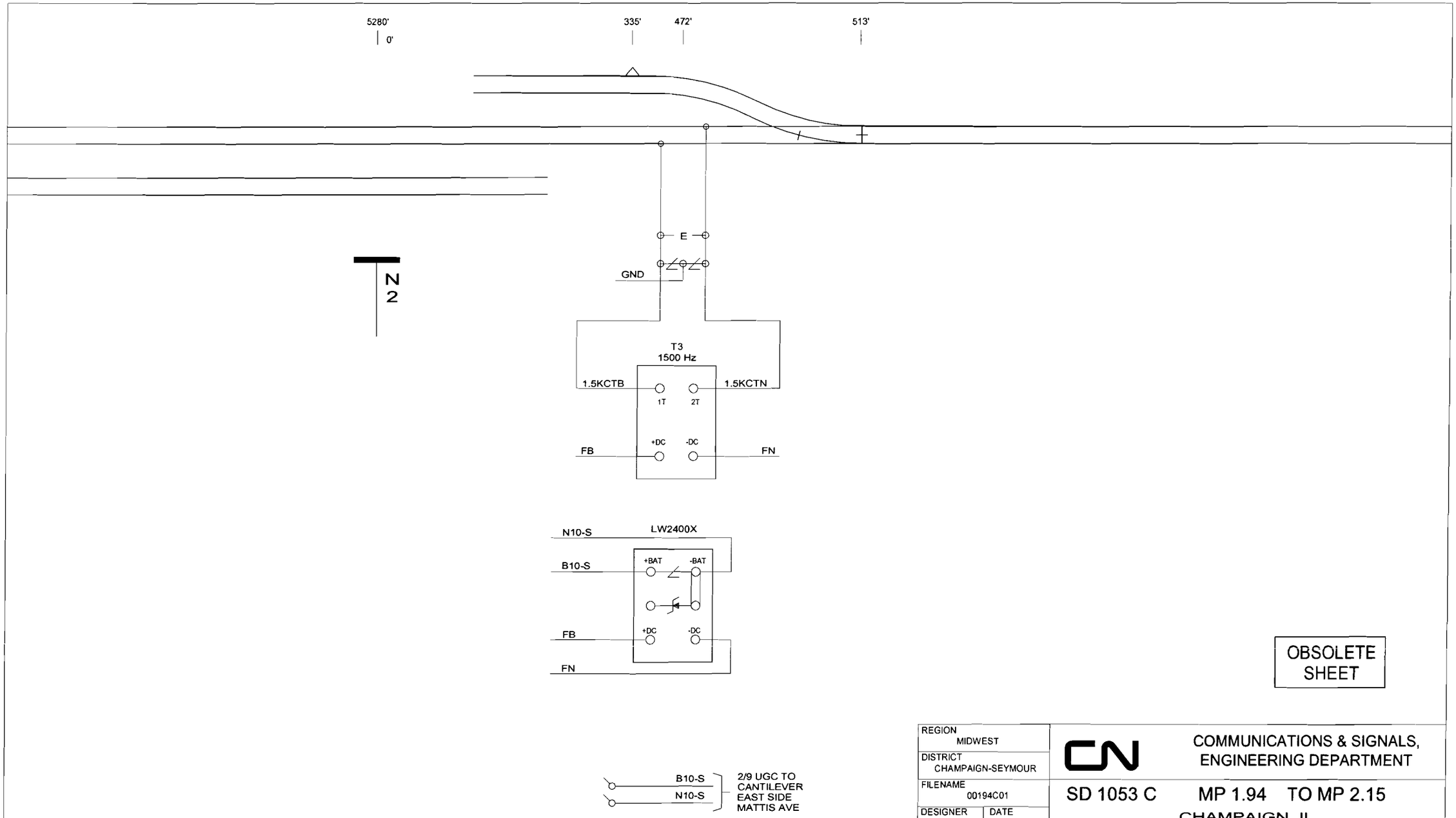

OBSOLETE SHEET

REGION MIDWEST	CN COMMUNICATIONS & SIGNALS, ENGINEERING DEPARTMENT
DISTRICT CHAMPAIGN-SEYMOUR	
FILENAME 00194C01	SD 1053 C MP 1.94 TO MP 2.15
DESIGNER CBV / DATE 1-10-03	CHAMPAIGN, IL
SHEET NO. 1 OF 1	SB START MATTIS AVE

5	4	8-6-07	3	1-27-06	2	10-10-88	1	REVISIONS

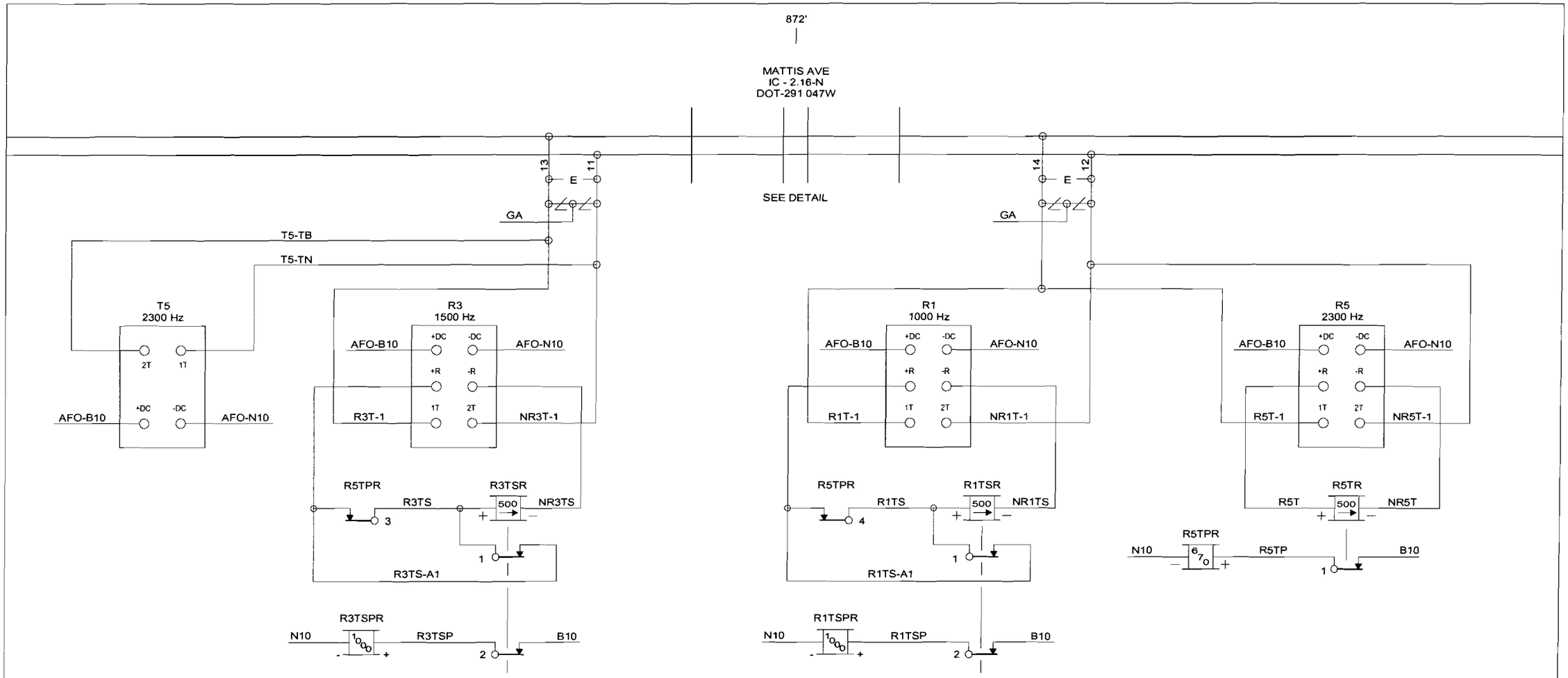

REGION MIDWEST	CN COMMUNICATIONS & SIGNALS, ENGINEERING DEPARTMENT
DISTRICT CHAMPAIGN-SEYMOUR	
FILENAME 00215C01	SD 1053 C MP 2.15 TO MP 2.20
DESIGNER CBV / DATE 1-10-03	CHAMPAIGN, IL
SHEET NO. 1 OF 3	MATTIS AVE TRACK CONNECTIONS

REVISIONS							
5		4	8-6-07	3	1-27-06	2	10-10-88	1

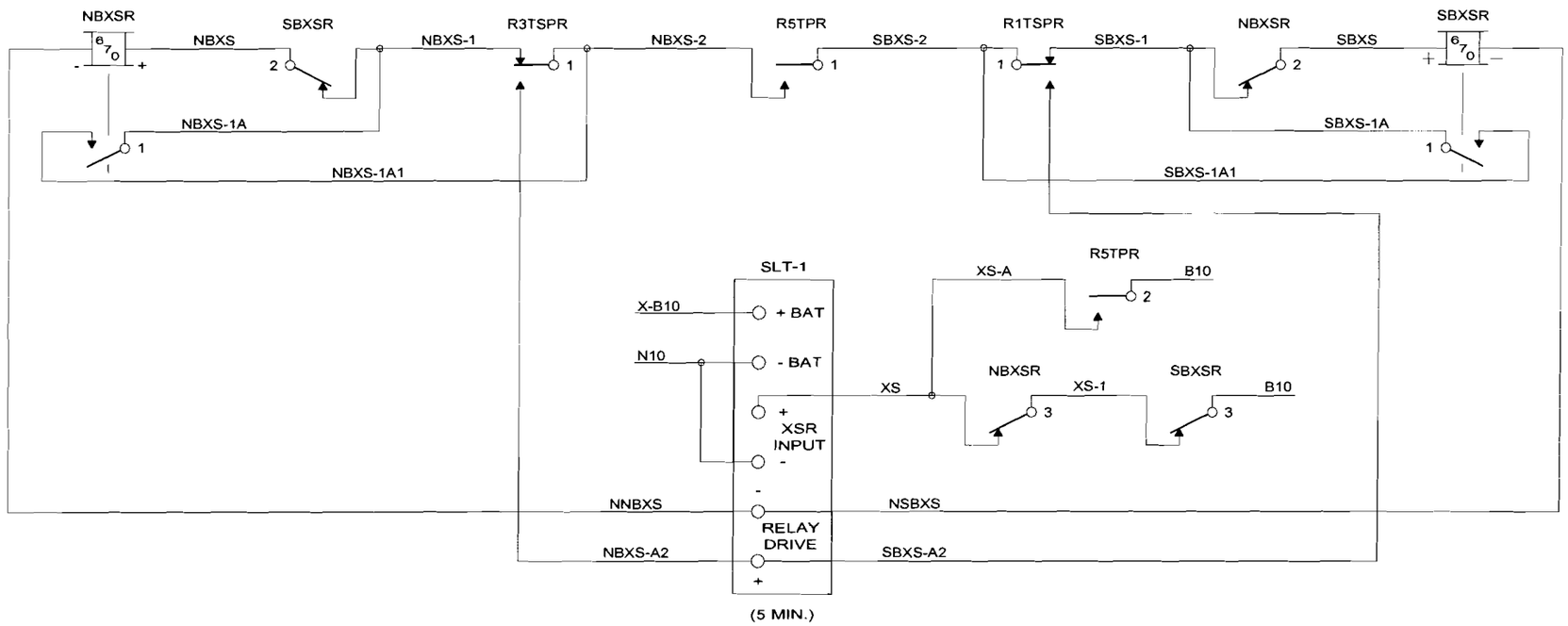

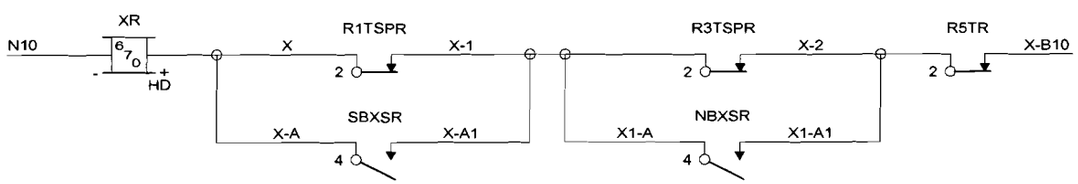

OBSOLETE SHEET

REGION MIDWEST	COMMUNICATIONS & SIGNALS, ENGINEERING DEPARTMENT
DISTRICT CHAMPAIGN-SEYMOUR	
FILENAME 00215C02	SD 1053 C MP 2.15 TO MP 2.20
DESIGNER CBV / DATE 1-10-03	CHAMPAIGN, IL
SHEET NO. 2 OF 3	MATTIS AVE CIRCUITS

5		4	8-6-07	3	1-27-06	2	10-10-88	1	REVISIONS

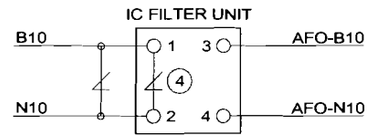

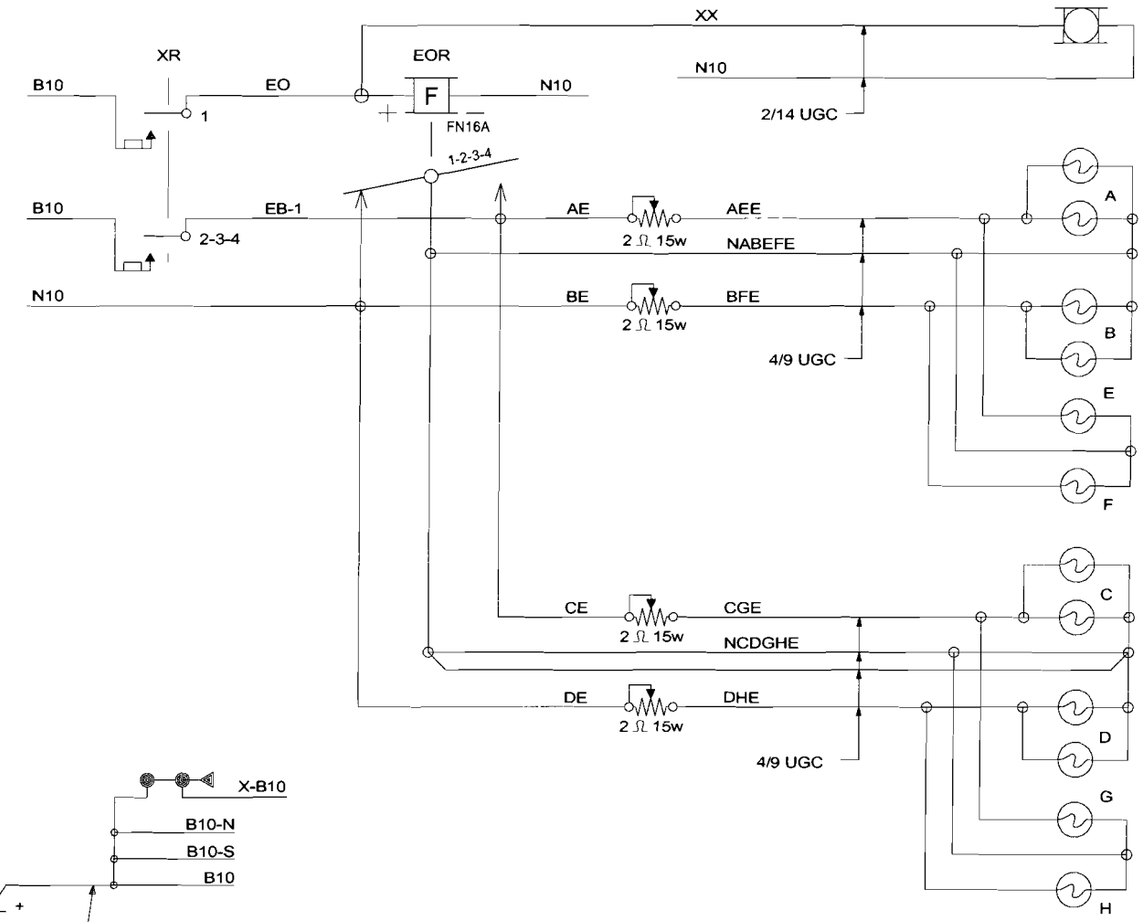

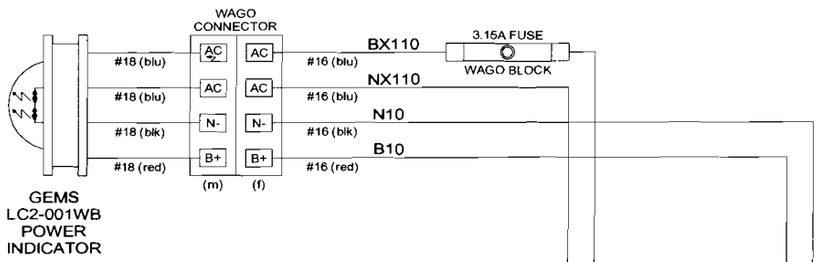

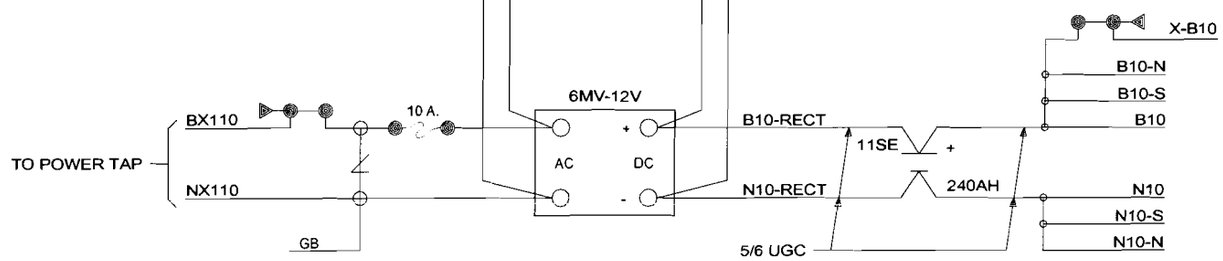

PRIME GROUNDING GRID

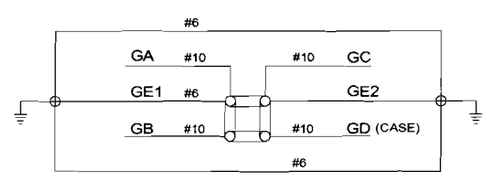

OBSOLETE SHEET

REGION MIDWEST	COMMUNICATIONS & SIGNALS, ENGINEERING DEPARTMENT
DISTRICT CHAMPAIGN-SEYMOUR	
FILENAME 00215C03	SD 1053 C MP 2.15 TO MP 2.20
DESIGNER CBV / DATE 1-10-03	CHAMPAIGN, IL
SHEET NO. 3 OF 3	MATTIS AVE POWER & CANTILEVER AFLS

REVISIONS							
5		4	8-6-07	3	1-27-06	2	10-10-88

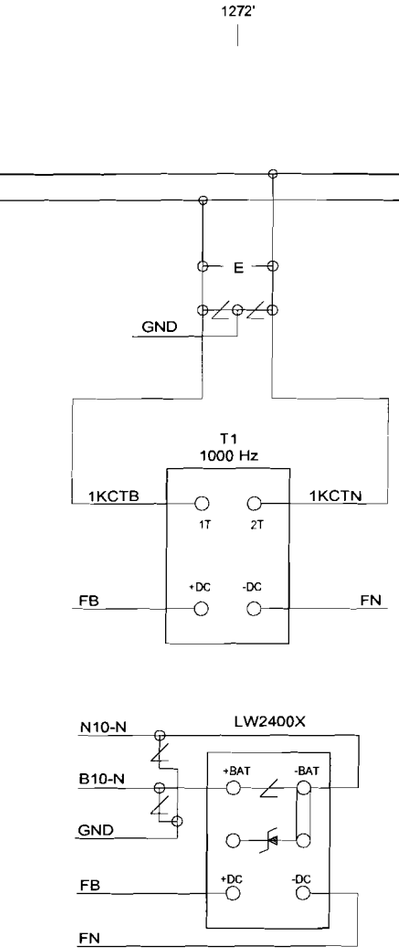

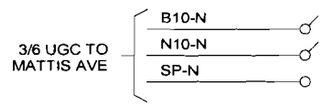

OBSOLETE SHEET

REGION MIDWEST	COMMUNICATIONS & SIGNALS, ENGINEERING DEPARTMENT
DISTRICT CHAMPAIGN-SEYMOUR	
FILENAME 00220C01	SD 1053 C MP 2.20 TO MP 2.30
DESIGNER CBV / DATE 1-10-03	CHAMPAIGN, IL
SHEET NO. 1 OF 1	NB START MATTIS AVE

REVISIONS							
5		4	8-6-07	3	1-27-06	2	10-10-88