10

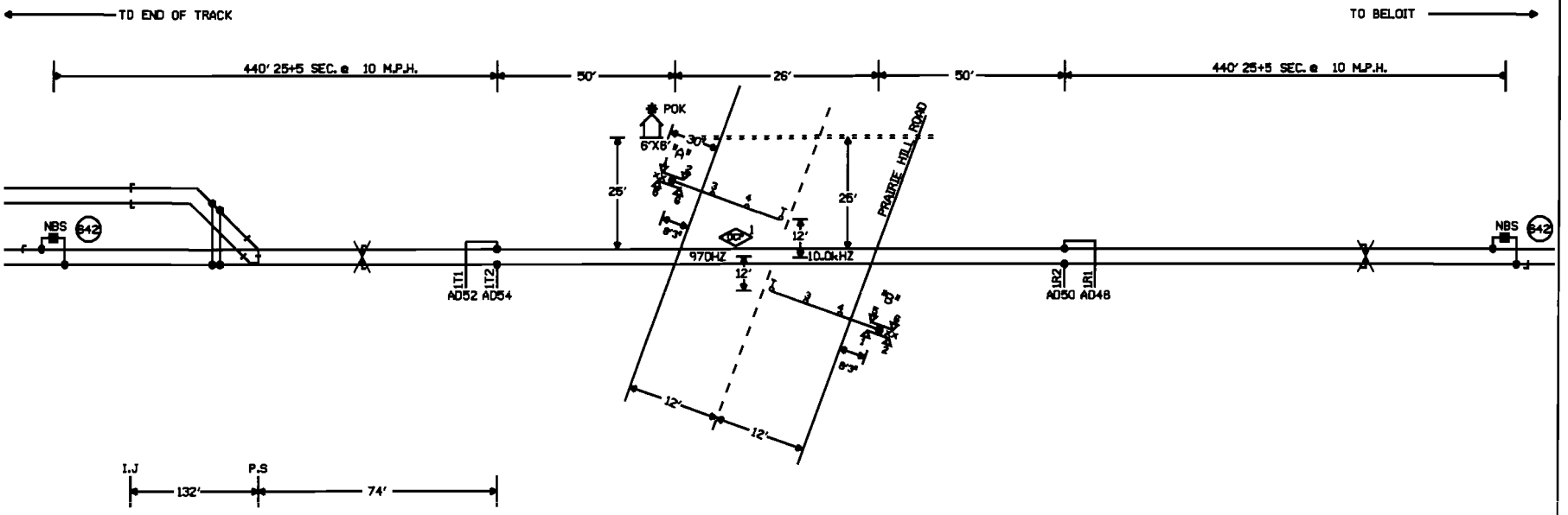

NOTES:

⊗ = TWISTED WIRES
INSULATED 1 TWIST PER FT.
ALL TRACK WIRES 2C. #6

TRANSMITTER AND RECEIVER LEADS TO BE SEPARATED BY AT LEAST 12" IN TRENCH. LENGTHS SHOULD NOT EXCEED MANUFACTURES RECOMMENDATION.

TOP OF FOUNDATION TO BE AT SAME ELEVATION AS THE SURFACE OF THE TRAVELED WAY & NO MORE THAN 4" ABOVE THE SURFACE OF THE GROUND.

ALL BUNGALOW WIRING TO BE #16 AWG FLEX UNLESS OTHERWISE SPECIFIED EXCEPT ALL GROUND WIRE TO BE #6 AWG FLEX OR LARGER.

ALL WIRING IN GATE MECHANISM TO BE #10 "AWG FLEX".

REFER TO UP STANDARD DWG FOR BUNGALOW GROUNDING.

ALL LIGHTS TO BE 12" ROUNDELS.

= = = = = = 4" X 40' CONDUIT

LIGHTS: LED LIGHTS

GATE A: 20'
GATE B: 20'

xx = BELL

CRTU MICROBURST

CONSTRUCTION NOTES:

1. INSTALL (1) 112# INSULATED JOINT AT THE END OF THE NORTH APPROACH.
2. INSTALL (1) 112# INSULATED JOINT AT THE END OF THE SOUTH APPROACH.
2. DOUBLE BOND JOINTS.
3. USE DC SHUNT ENHANCER (TAB 653).

X = TO BE REMOVED.

RECEIVED
AUG 4 2008
Illinois Commerce Commission
SAFETY SECTION

W(S) ← O → E(N)

SOUTH BELOIT, ILLINOIS
PRAIRIE HILL ROAD
M.P. 88.76
BELOIT IND. LEAD
OFF HARVARD SUBDIVISION
D.O.T.#177 076W

NEW SHEET

03-07-08 INSTALL FLASHERS AND GATES WITH CWT AT M.P. 88.76	MODIFICATION LEVEL		UNION PACIFIC SIGNAL DESIGN	DES: SSC	UNION PACIFIC RAILROAD
	G.A. LAST LEVEL CHECKED	00		DWN: SSC	SOUTH BELOIT, ILLINOIS
	LAST LEVEL MOD THIS TYPICAL	00		CHK: JTB	HIGHWAY CROSSING SIGNALS
	LAST LEVEL BY DESIGNER	00		A.F.E. 87189	CONTROL CIRCUITS
AFE 87189 JJL SSC/JJF	CHANGED FROM TYPICAL?	Y		ID: BEL8878.1X	Offices of So.Pac Engineering - Signal/TCO Omaha, Nebraska

DATE 03-07-08
SHEET 1
DWG 88.76
BEL-RTE

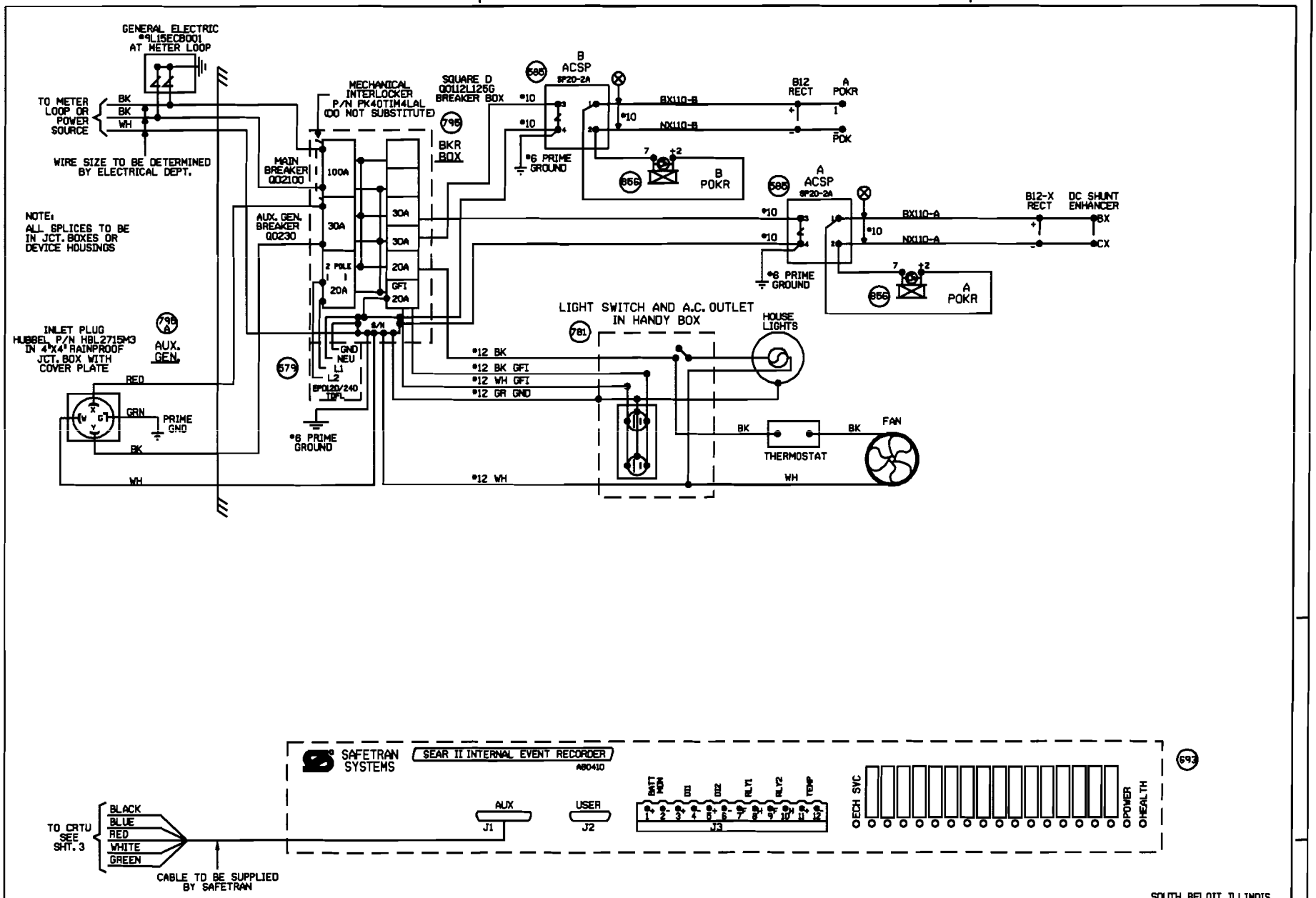
GENERAL ELECTRIC
#9L15EC8001
AT METER LOOP
TO METER LOOP OR POWER SOURCE
BK
BK
WH
WIRE SIZE TO BE DETERMINED BY ELECTRICAL DEPT.
NOTE:
ALL SPLICES TO BE IN JCT. BOXES OR DEVICE HOUSINGS
MECHANICAL INTERLOCKER
P/N PK40TIM4LAL
(DO NOT SUBSTITUTE)
MAIN BREAKER
QO2100
100A
AUX. GEN. BREAKER
QO230
30A
2 POLE
20A
SQUARE D
QO112L125G
BREAKER BOX
BKR BOX
30A
30A
20A
GFI
20A
S/N
GND
NEU
L1
L2
BPD120/240
TOPL
INLET PLUG
HUBBEL P/N HBL2715M3
IN 4"X4" RAINPROOF
JCT. BOX WITH
COVER PLATE
AUX. GEN.
RED
GRN
PRIME GND
BK
WH
*6 PRIME GROUND
*10
*10
*6 PRIME GROUND
B
ACSP
SP20-2A
BX110-B
NX110-B
B12
RECT
A
POKR
POK
B
POKR
A
ACSP
SP20-2A
BX110-A
NX110-A
B12-X
RECT
DC SHUNT
ENHANCER
BX
CX
A
POKR
LIGHT SWITCH AND A.C. OUTLET
IN HANDY BOX
HOUSE LIGHTS
*12 BK
*12 BK GFI
*12 WH GFI
*12 GR GND
BK
BK
THERMOSTAT
FAN
*12 WH
WH
SAFETRAN SYSTEMS
SEAR II INTERNAL EVENT RECORDER
A80410
AUX
J1
USER
J2
BATT MON
DI1
DI2
RLY1
RLY2
TEMP
J3
OECH SVC
OPOWER
OHEALTH
TO CRTU SEE SHT. 3
BLACK
BLUE
RED
WHITE
GREEN
CABLE TO BE SUPPLIED BY SAFETRAN
SOUTH BELOIT, ILLINOIS
PRAIRIE HILL ROAD
M.P. 88.76
BELOIT IND. LEAD
OFF HARVARD SUBDIVISION
D.O.T.#177 076W
NEW SHEET
03-07-08
INSTALL FLASHERS AND GATES WITH CWT AT M.P. 88.76
AFE 87189 JJL
SSC/JJF
MODIFICATION LEVEL
Q.A. LAST LEVEL CHECKED DO
LAST LEVEL MOD THIS TYPICAL DO
LAST LEVEL BY DESIGNER DO
CHANGED FROM TYPICAL? Y
UNION PACIFIC
SIGNAL DESIGN
DES: SSC
DWN: SSC
CHK: JJL
A.F.E. 87189
ID: BEL8878.2X
UNION PACIFIC RAILROAD
SOUTH BELOIT, ILLINOIS
HIGHWAY CROSSING SIGNALS
CONTROL CIRCUITS
DATE 03-07-08
SHEET 2
DWG 88.76
BEL-RTE

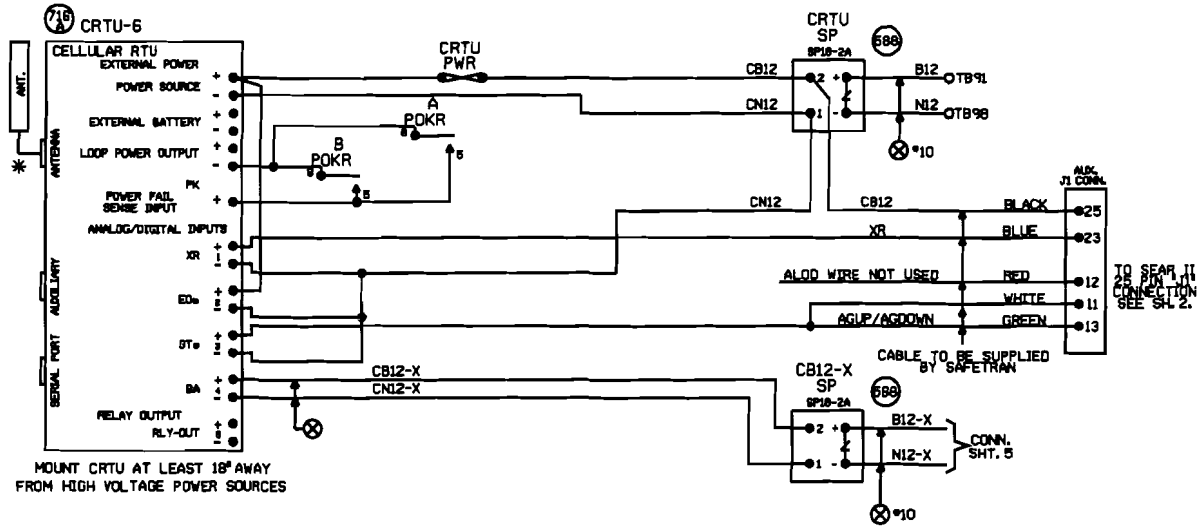

MOUNT CRTU AT LEAST 18" AWAY
FROM HIGH VOLTAGE POWER SOURCES

NOTES:

ALL DIODES 1N5060 OR 1N4004 UNLESS OTHERWISE NOTED.
✳ MOUNT ANTENNA ON TOP OF HOUSE.
INSTALL ANTENNA CABLE AND CHOKE PER TECH BULLENTIN #99-0015-00
ALL WIRES #18 UNLESS OTHERWISE NOTED.
ALL UNUSED 'NC' INPUTS MUST BE TIED HIGH TO BATTERY
ALL UNUSED ANALOG INPUTS MUST BE TIED HIGH TO BATTERY
ALL UNUSED 'NO' INPUTS MUST BE DISCONNECTED
NORMAL STATE FOR ANALOG CHANNELS IS EQUAL TO THE STORED NOMINAL VOLTAGE +120% OR -81%
CRTU FRONT PANEL DISPLAY CHART INDICATES NORMAL STATE

■ DIGITAL INPUT HIGH, OR POWER FAIL INPUT CLOSED ■ DIGITAL INPUT LOW, OR POWER FAIL INPUT OPEN

■ L ← LATCH IS SET BECAUSE CRTU DETECTED AN ALARM CONDITION
12.06V L ←

'*RUN MODE' '*RUN MODE-SILENT'
← → CRTU RADIO IS DISABLED. REPROGRAM CRTU WITH LAPTOP.

ANALOG AND AC INPUT MODULES AND SURGE PROTECTORS MUST BE MOUNTED LESS THAN 18" FROM CRTU

ANALOG MODULES CONVERT DC VOLTAGE TO A SQUARE WAVE. A WORKING ANALOG MODULE WILL HAVE 4.5VDC TO 8.0VDC BETWEEN 5VOUT+ AND 5VOUT-. WHERE, 0VOLTS = 0HZ OUT, 30VOLTS = 10KHZ OUT, AND 15VOLTS = 5KHZ OUT
MAKE SURE CRTU IS PROGRAMMED WITH CALIBRATION SETTINGS.

CRTU CH4 CAN BE CONNECTED TO EITHER SP18 OR EQUIPMENT SIDE OF MDSAL TAB 565

UNIT INSTALLATION AND SETUP

R.R. SITE ID WHERE; SSSS = 4 CHARACTER SUBDIVISION ID. FILL WITH PRECEDING ZEROS AS REQUIRED. THE MAIN TRACK SUBDIVISION ID# IS IN THE CURRENT TIMETABLE. INDUSTRIAL LEADS, LEASED, AND LEAD TRACKS LISTED WITHIN THE SUBDIVISION MAY HAVE THEIR OWN UNIQUE SUBDIVISION ID#. ALWAYS REFER TO CURRENT PRINTED COPY OF THE TIMETABLE.
|||||||| = 8 CHARACTERS USE DOT# AT CROSSINGS, AND
WD|||||| = USE 'WD' THEN MP# AT WAYSIDE LOCATIONS.
EXAMPLE = 0765WD180L.5UT
HB|||||| = USE 'HB' THEN MP# AT HBD SITES.
EXAMPLE = 0100-HB66.627X
THE MP# MUST USE A DECIMAL POINT TO SEPARATE NUMBERS. FILL WITH PRECEDING DASHES AS REQUIRED.
AA = 2 CHARACTER STATE NAME FOR ALL LOCATIONS.
MUST BE 14 CHARACTERS LONG, NO SPACES ALLOWED.

SITE IDENTIFIER SSSS||||||AA	0167-177076WIL
OPERATION TO RESUME: RUN	
SIGNAL STRENGTH dBm	
CARRIER ID	00532
FIRMWARE VERSION	2.3.06
SERIAL NUMBER	03-03313-2801
BOOT VERSION:	
CHM VERSION:	
MIN ASSIGNMENT	
ESN: (MICROBURST ONLY)	
CONFIGURATION NET	MICROBURST
SILENCE INTERVAL	60 MINUTES
HEALTHCHECK INTERVAL	EVERY 2 DAYS
ALARM DEFER DELAY	240 MINUTES (4 HOURS)
SIGNAL STATUS	
SCADANET STATUS	
CALIBRATION CONSTANT CH1	
CALIBRATION CONSTANT CH2	
CALIBRATION CONSTANT CH3	
CALIBRATION CONSTANT CH4	
CALIBRATION CONSTANT PS	

FIELD PROVIDES: SAMPLED NOMINAL VOLTAGES, SCADANET STATUS CALIBRATION CONSTANTS, SERIAL NUMBER, AND SIGNAL STATUS.

CHANNEL SETUP - STANDARD CONFIGURATION 32:XR,EOe,GTe,Ba

CHANNEL NORMAL STATE	SENSE (NO/NC)	NAME FUNCTION	RECOGNITION DELAY SECONDS ACTIVE	RECOGNITION DELAY SECONDS NORMAL	RETURN TO NORMAL	REPORTING MODE	ALARM LINKED CHANNEL	ALARM LINKED CRITERIA	EVENT LOGGING ENABLED OPTIONS
POWER FAIL (CH0) ■	POWER FAIL DETECT NO	PF:/-PK AC POWER FAIL	7,200 ALARM	300 NORMAL	ENABLED	ALERT	DISABLED	N/A	
CH1 ■	DIGITAL INPUT NC	CH1-XR XR DOWN TO LONG	1,800 ALARM	1 NORMAL	ENABLED	ALERT	DISABLED	N/A	ANALOG VALUE SENT
CH2 ■	DIGITAL INPUT NO	CH2-EOe LIGHT OUT	120 ALARM	10 NORMAL	ENABLED	ALERT	DISABLED	N/A	
CH3 ■	DIGITAL INPUT NO	CH3-GTe GATES NOT UP/DOWN	120 ALARM	10 NORMAL	ENABLED	ALERT	DISABLED	N/A	DIGITAL EVENTS
CH4 STORED NOMINAL VOLTAGE	ANALOG INPUT N/A	CH4-Ba/V BATTERY MONITOR BATTERY LOW	600 ALARM	1200 NORMAL	ENABLED	ALERT W/UPDATE	DISABLED	N/A	PF:/-PK CH1-XR CH2-EOe CH3-GTe
POWER SOURCE (CH5)	ANALOG INPUT N/A	PS-Ba/V BATTERY MONITOR BATTERY LOW	600 ALARM	1200 NORMAL	ENABLED	ALERT W/UPDATE	DISABLED	N/A	

ANALOG CHANNEL	USEFUL RANGE VOLTS LOW	USEFUL RANGE VOLTS HIGH	DISPLAYED RANGE VOLTS LOW	DISPLAYED RANGE VOLTS HIGH	RELATIVE ALARM POINT LOW	RELATIVE ALARM POINT HIGH	ABSOLUTE ALARM POINT LOW	ABSOLUTE ALARM POINT HIGH	AUTOMATIC UPDATE INTERVAL	STORED NOMINAL VOLTAGE	SAMPLED NOMINAL VOLTAGE
CH4	0.0	30.00	0.0	30.00	81%	120%	10.0	29.0	14 DAYS	12.69	
POWER SOURCE	0.0	30.00	0.0	30.00	81%	120%	10.0	29.0	14 DAYS	12.69	
RELAY OUTPUT	NAME RLY-OUT		ACTIVE SET-UP-OPEN		NORMAL CLR-ON-CLOSE		PULSE DURATION		15 SECONDS	6VdC/g Vers 2.3.3 REV'D 9-20-02	

MAINTENANCE OPERATIONS

TO START OR ABORT ANY PROCEDURE
1. PRESS THE 'CANCEL' BUTTON FIRST

WHEN RESPONDING TO A CALL, PUT THE CRTU IN THE 'SILENCE ALARMS' MODE
1. PRESS 'SELECT' AND THEN '+ ARROW' BUTTON UNTIL
DISPLAY: ACTION? SILENCE ALARMS
2. PRESS THE 'SELECT' BUTTON TWICE.
3. CORRECT PROBLEM AND SIMULATE NORMAL TRAIN MOVEMENT THROUGH THE LOCATION
4. EXAMINE EACH CHANNEL ON THE CRTU
5. PRESS THE '+/- ARROW' BUTTON. VERIFY ALL CHANNELS INDICATE A NORMAL STATE NORMAL STATES ARE ON THE CHANNEL SETUP CHART

CLEAR TIMERS, LATCHES AND SEND ALL NORMAL
1. DO STEPS #1 - #5 ABOVE, AND PRESS 'CANCEL'.
2. PRESS 'SELECT' AND THEN '- ARROW' BUTTON UNTIL
DISPLAY: ACTION? SERVICE MODE
3. PRESS 'SELECT' AGAIN TO RESET TIMERS, AND IF
DISPLAY: SERVICE MODE ALL NORMAL
4. PRESS 'SELECT' AGAIN TO CLEAR LATCHES, AND SEND ALL NORMAL. SKIP STEPS #5-#6.
5. HOWEVER, IF ALARMS ARE NOT CLEARED,
DISPLAY: SERVICE MODE ALARMS PENDING/PRESENT
6. PRESS 'CANCEL', CORRECT PROBLEM AND REPEAT STEPS #2 THRU #5 UNTIL ALL NORMAL SENT.

TO CANCEL THE 'SILENCE ALARMS' MODE
1. PRESS 'SELECT' AND THEN '+ ARROW' BUTTON UNTIL
DISPLAY: ACTION? CANCEL SILENCE
2. PRESS THE 'SELECT' BUTTON AGAIN

EXAMINE & SET BATTERY VOLTAGE NOMINAL VALUE
1. PRESS THE '+ ARROW' OR '- ARROW' BUTTON UNTIL THE DESIRED CHANNEL IS DISPLAYED.
DISPLAY: PS-Ba 13.63V NORMAL
2. VERIFY THE DISPLAYED READING WITH A DIGITAL VOLTMETER
3. PRESS THE 'SELECT' BUTTON, AND THE CRTU DISPLAY WILL SWITCH BETWEEN CURRENT/SAVED NOMINAL VOLTAGE VALUES.
DISPLAY: NOMINAL ON #67 (CURRENT) 13.63
DISPLAY: SAVED NOMINAL 6 (STORED) 12.69
4. PRESS THE 'SELECT' BUTTON AND THE CURRENT OR 'NOMINAL ON' VALUE WILL BE SAMPLED AND STORED AS THE 'SAVED NOMINAL' VALUE
5. VERIFY THE 'NOMINAL ON' AND 'SAVED NOMINAL' VALUES ARE EQUIVALENT, REPEAT STEPS #1 THRU #3 & PRESS THE 'CANCEL' BUTTON.

CHANGE CRTU CONFIGURATION TO CONFIGURATON PROGRAM 32

NEW SHEET
SOUTH BELOIT, ILLINOIS
PRAIRIE HILL ROAD
M.P. 88.76
BELOIT IND. LEAD
OFF HARVARD SUBDIVISION
D.O.T.#177 076W

03-07-08
INSTALL FLASHERS AND GATES WITH CWT AT M.P. 88.76
AFE 87189 JJL SSC/JJF

MODIFICATION LEVEL	
D. A. LAST LEVEL CHECKED	DJ
LAST LEVEL MOD THIS TYPICAL	DJ
LAST LEVEL BY DESIGNER	DD
CHANGED FROM TYPICAL?	Y

UNION PACIFIC
SAFETY CONSCIOUS WORK PLACE
SIGNAL DESIGN

DES:	SSC
DIR:	SSC
CHK:	JJL
A.F.E.	87189
ID:	BEL8876.3X

UNION PACIFIC RAILROAD
SOUTH BELOIT, ILLINOIS
HIGHWAY CROSSING SIGNALS
CONTROL CIRCUITS
Office of S-AVP Engineering - Signal/TCO Omaha, Nebraska

DATE 03-07-08
SHEET 3
DWG 88.76
BEL-RTE

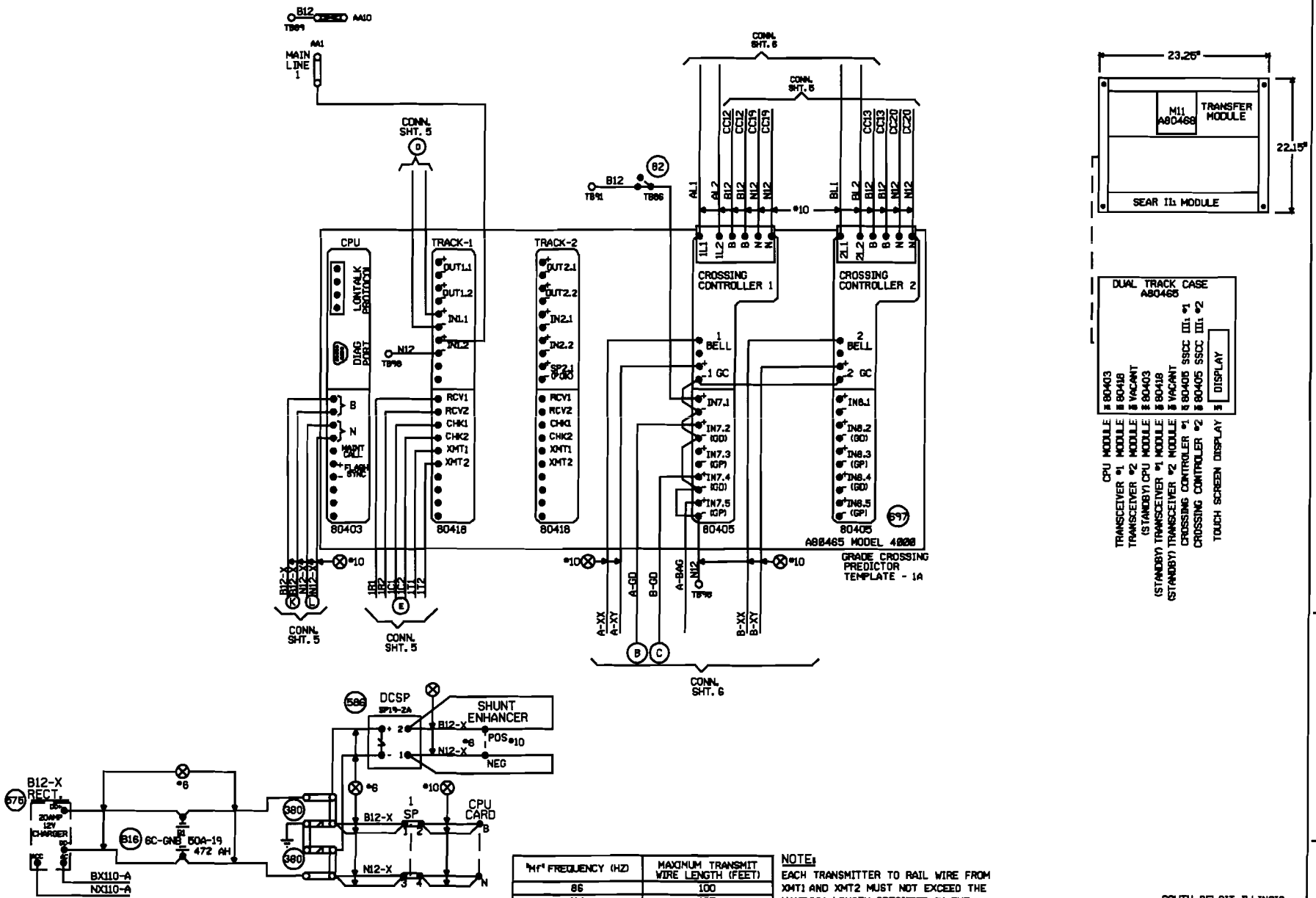

"Mf" FREQUENCY (HZ)	MAXIMUM TRANSMIT WIRE LENGTH (FEET)
86	100
114	125
156	150
211	200
285-970	250

NOTE:
EACH TRANSMITTER TO RAIL WIRE FROM XMT1 AND XMT2 MUST NOT EXCEED THE MAXIMUM LENGTH SPECIFIED IN THE TABLE SHOWN. THE RECEIVER WIRE LENGTH IS NOT CRITICAL. DOES NOT APPLY TO S TRACK WIRE APPLICATION.

NEW SHEET

SOUTH BELOIT, ILLINOIS
PRAIRIE HILL ROAD
M.P. 88.76
BELOIT IND. LEAD
OFF HARVARD SUBDIVISION
D.O.T.#177 076W

03-07-08
INSTALL FLASHERS AND GATES WITH CWT AT M.P. 88.76
AFE 87189 JJL SSC/JJF

MODIFICATION LEVEL	
G.A. LAST LEVEL CHECKED	DQ
LAST LEVEL MOD THIS TYPICAL	DQ
LAST LEVEL BY DESIGNER	DQ
CHANGED FROM TYPICAL?	Y

UNION PACIFIC
SIGNAL DESIGN

DES: SSC
DIG: SSC
CHK: JJL
A.F.E. 87189
ID: BEL8878.4X

UNION PACIFIC RAILROAD
SOUTH BELOIT, ILLINOIS
HIGHWAY CROSSING SIGNALS
CONTROL CIRCUITS
Office of Sr.AVP Engineering - Signal/TCO Omaha, Nebraska

DATE 03-07-08
SHEET 4
DWG 88.76
BEL-RTE

Minimum Program Steps Report

Location and SIN

DOT Number: 177076W
Milepost Number: 88.76
Site Name: SOUTH BELOIT, IL

SIN: 762010010016 *

* Parameter is part of office check number calculation.

MCF and Template Selection

MCF Name: GCP-T6X-01-2.mcf
MCF Revision: 012
MCFCRC: 0DFE7A0C

Template = 1A:6 Trk Bi *

* Parameter is part of office check number calculation.

Minimum Program Steps

TEMPLATE: track 1-Bi, Island
Track 1 : GCP Frequency = 970 Hz
Track 1 : Approach Distance = 440 ft See Plans
Track 1 : Prime Warning Time = 25 sec *
Track 1 : Prime UAX = IP *
Track 1 : GCP Transmit Level = Medium Set in Field
Track 1 : Isl Frequency = 10.0 kHz

TEMPLATE: AND 1 XR
AND 1 Enable Used = Yes *

TEMPLATE: IP assignment 1
IN 1.1 = T1 Prime UAX *
IN 1.2 = Out Of Service IP 1 *

TEMPLATE: IP assignment SSCC
IN 7.1 = AND 1 XR Enable *

GCP: track 1
Track 1 : Island Distance = 126 ft *

ADVANCED: out of service
OOS Control = OOS IPs *

* Parameter is part of office check number calculation.

Check Numbers

Office Check Number: 33CED763
Config. Check Number: 3460E54B
(Based on MCF Revision 012)

Parameters not part of office check number calculation:

Track 1 : GCP Frequency = 970 Hz
Track 1 : Approach Distance = 440 ft See Plans
Track 1 : GCP Transmit Level = Medium Set in Field
Track 1 : Isl Frequency = 10.0 kHz

Comments

<none>

Configuration Package File

Filename: BEL8876 177076W.pac
Path: O:\UPRR\JXXD00523\documents\gcp program\
Date/Time: 5/23/2008 8:32:46

SOUTH BELOIT, ILLINOIS
PRAIRIE HILL ROAD
M.P. 88.76
BELOIT IND. LEAD
OFF HARVARD SUBDIVISION
D.O.T.#177 076W

NEW SHEET

				03-07-08 INSTALL FLASHERS AND GATES WITH CWT AT M.P. 88.76 AFE 87189 JJL SSC/JJF	NOTE: Actual OFFSET and ISLAND distances must be entered by field personnel.	UNION PACIFIC SIGNAL DESIGN	DES: SSC DIG: SSC CHK: JJL A.F.E. 87189 ID: BEL8876.4AX	UNION PACIFIC RAILROAD SOUTH BELOIT, ILLINOIS HIGHWAY CROSSING SIGNALS CONTROL CIRCUITS Office of Sr.AVP Engineering - Signal/TCO Omaha, Nebraska	DATE 03-07-08 SHEET 4A DWG 88.76 BEL-RTE

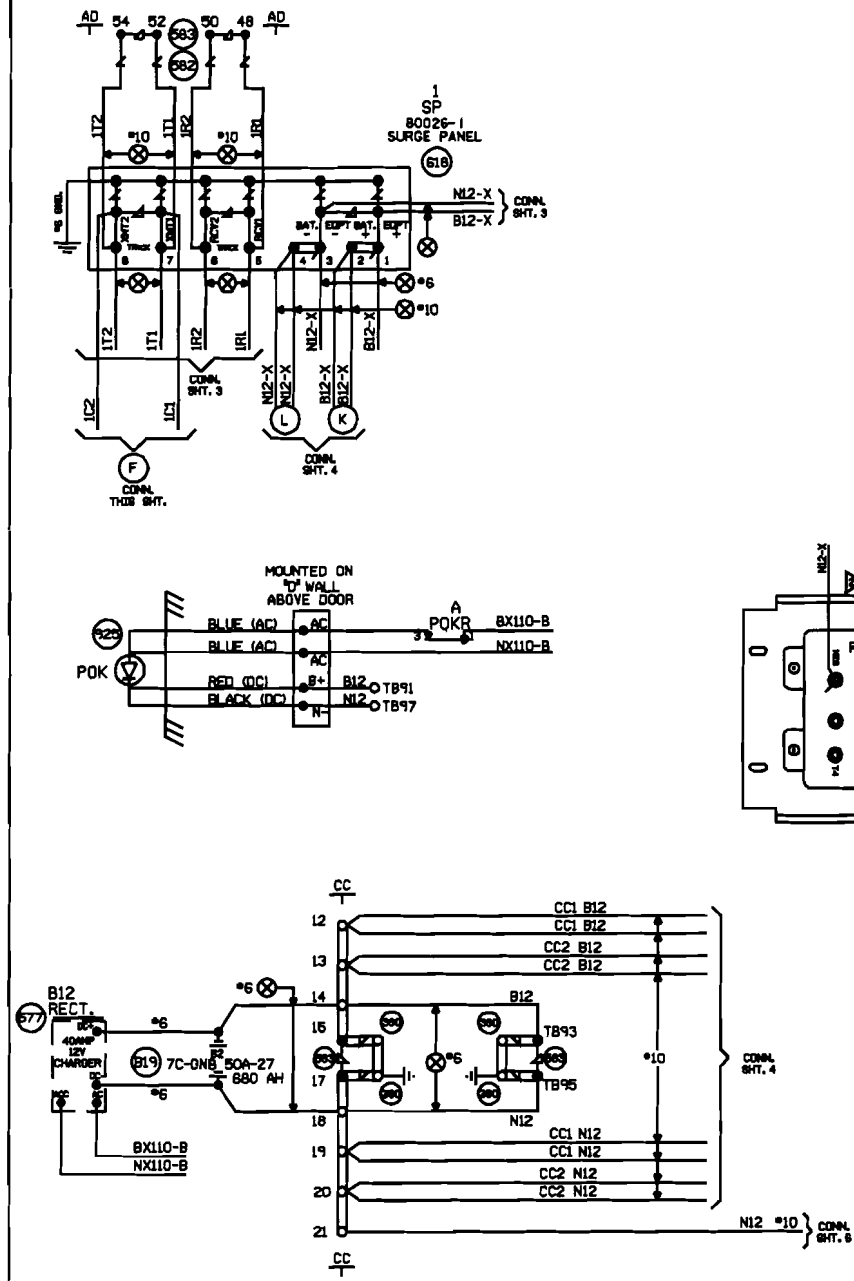

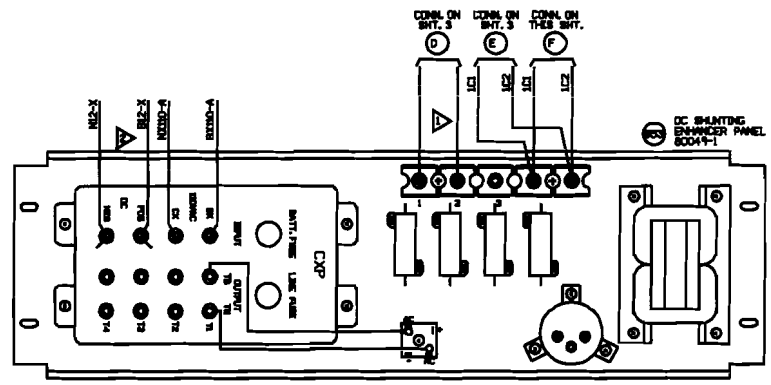

1. PROGRAM 4000 GCP VI FOR MINIMUM DELAY OF 5 SECONDS.
2. BATTERY CONNECTIONS (B & N) TO CXP SHOULD BE DIRECT FROM BATTERY POSTS TO CXP TERMINALS (POS & NEG)

SOUTH BELOIT, ILLINOIS
PRAIRIE HILL ROAD
M.P. 88.76
BELOIT IND. LEAD
OFF HARVARD SUBDIVISION
D.O.T.#177 076W

NEW SHEET

03-07-08 INSTALL FLASHERS AND GATES WITH CWT AT M.P. 88.76	MODIFICATION LEVEL		UNION PACIFIC SIGNAL DESIGN	DES: SSC	UNION PACIFIC RAILROAD	DATE 03-07-08
	Q.A. LAST LEVEL CHECKED	DO		DIG: SSC	SOUTH BELOIT, ILLINOIS	SHEET 5
	LAST LEVEL MOD THIS TYPICAL	DO		CHK: JJL	HIGHWAY CROSSING SIGNALS	DWG 88.76
AFE 87189 JJL SSC/JJF	LAST LEVEL BY DESIGNER	DO		A.F.E. 87189	CONTROL CIRCUITS	BEL-RTE
	CHANGED FROM TYPICAL?	Y		ID: BEL8876.5X	Office of Sr.AVP Engineering - Signal/TCO Omaha, Nebraska	

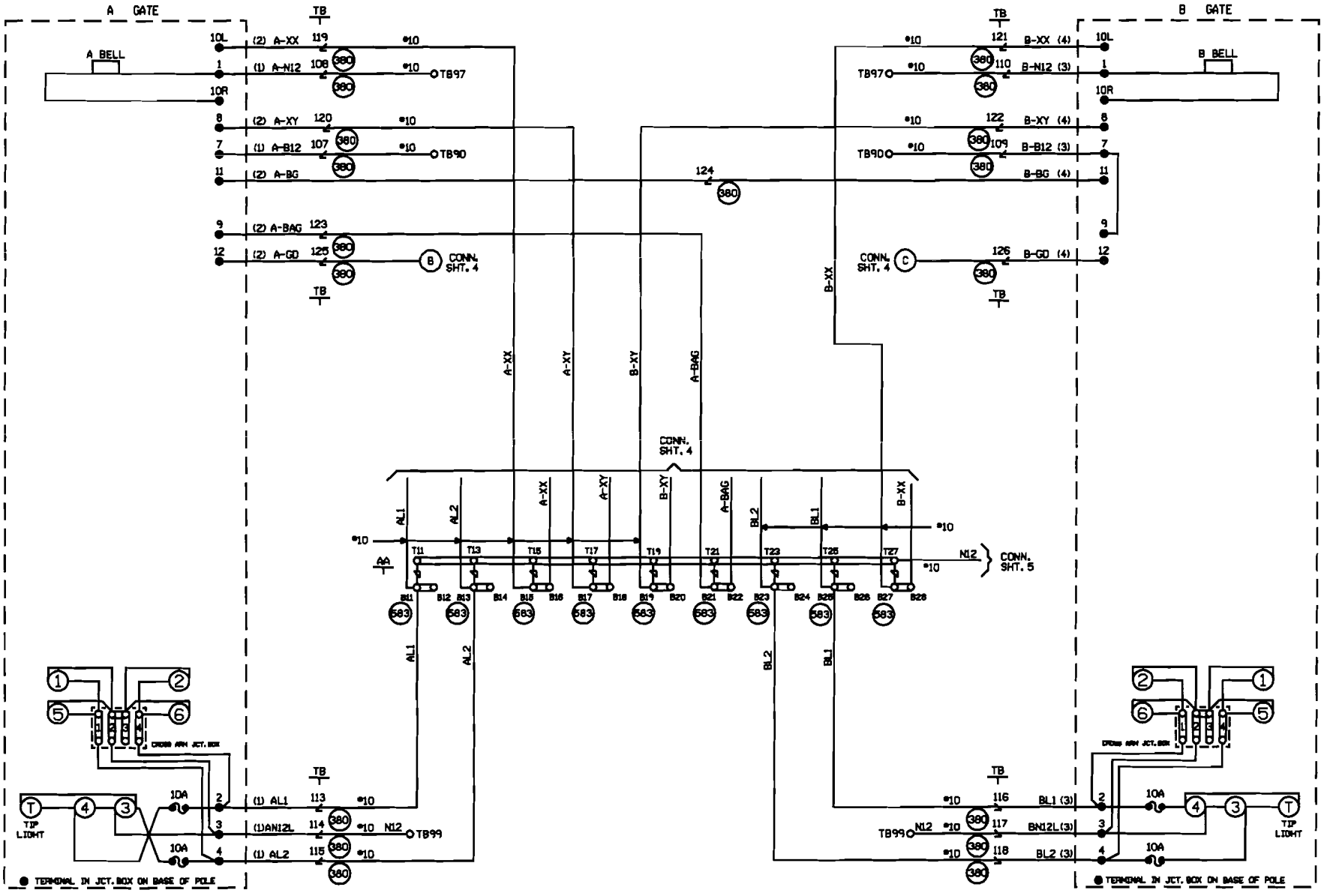

CABLE TABULATION

CABLE NO. 1 5C. NO.6 U.G.B.T.
CABLE NO. 2 7C. NO.14 U.G.B.T.
CABLE NO. 3 5C. NO.6 U.G.B.T.
CABLE NO. 4 7C. NO.14 U.G.B.T.

NEW SHEET

SOUTH BELOIT, ILLINOIS
PRAIRIE HILL ROAD
M.P. 88.76
BELOIT IND. LEAD
OFF HARVARD SUBDIVISION
D.O.T.#177 076W

03-07-08 INSTALL FLASHERS AND GATES WITH CWT AT M.P. 88.76	
AFE 87189	JJL SSC/JJF

MODIFICATION LEVEL	
Q. A. LAST LEVEL CHECKED	00
LAST LEVEL MOD THIS TYPICAL	00
LAST LEVEL BY DESIGNER	00
CHANGED FROM TYPICAL?	Y

UNION PACIFIC — SIGNAL DESIGN

DES:	SSC
DWN:	SSC
CHK:	JJL
A.F.E.	87189
ID:	BEL8876.6X

UNION PACIFIC RAILROAD

SOUTH BELOIT, ILLINOIS
HIGHWAY CROSSING SIGNALS
CONTROL CIRCUITS

Office of Sr.AVP Engineering - Signal/TCS Omaha, Nebraska

DATE	03-07-08
SHEET	6
DWG	88.76
	BEL-RTE

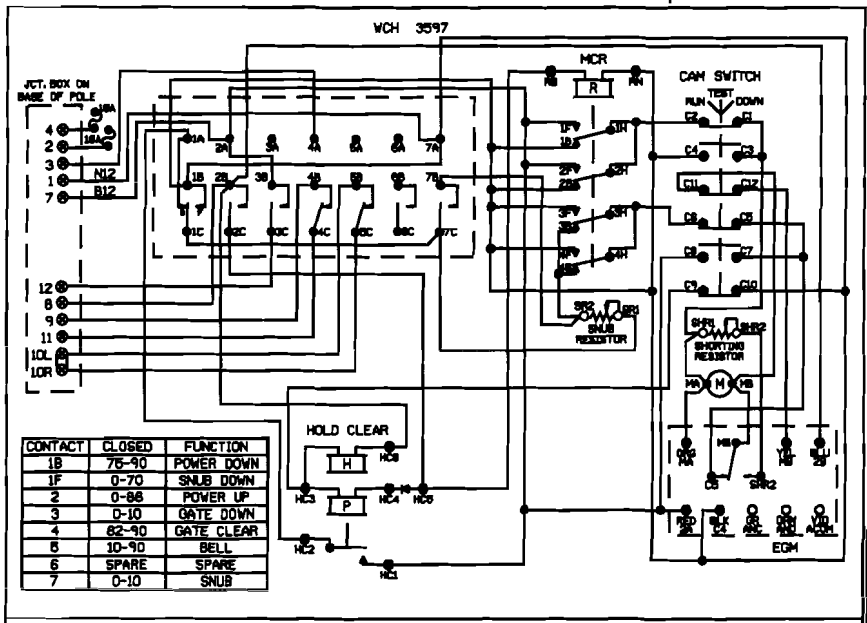

CONTACT	CLOSED	FUNCTION
1B	75-90	POWER DOWN
1F	0-70	SNUB DOWN
2	0-86	POWER UP
3	0-10	GATE DOWN
4	82-90	GATE CLEAR
5	10-90	BELL
6	SPARE	SPARE
7	0-10	SNUB

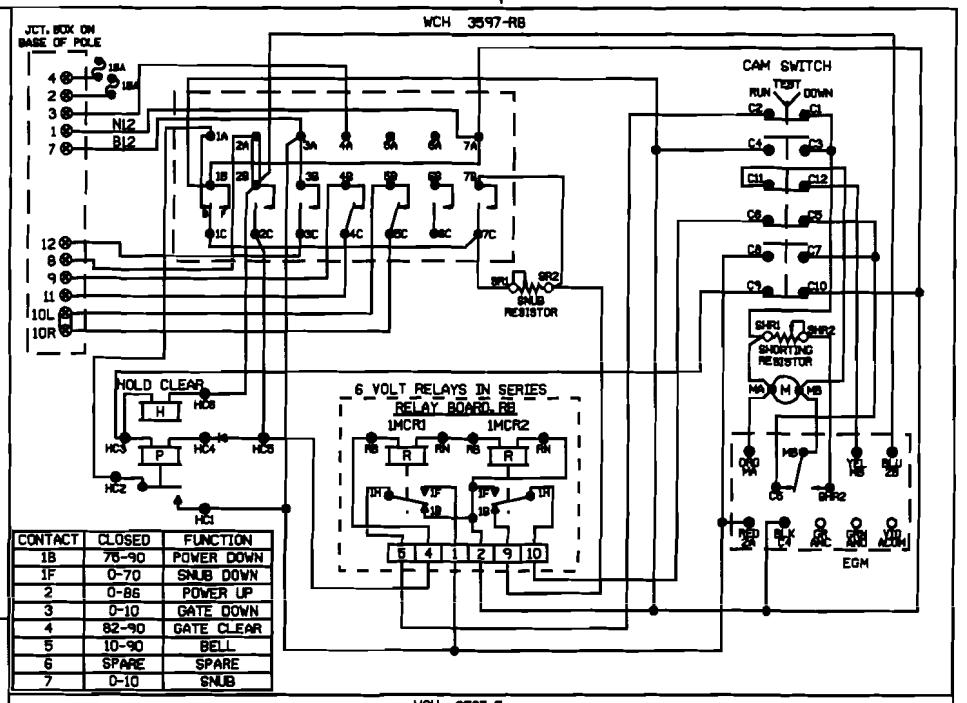

CONTACT	CLOSED	FUNCTION
1B	75-90	POWER DOWN
1F	0-70	SNUB DOWN
2	0-86	POWER UP
3	0-10	GATE DOWN
4	82-90	GATE CLEAR
5	10-90	BELL
6	SPARE	SPARE
7	0-10	SNUB

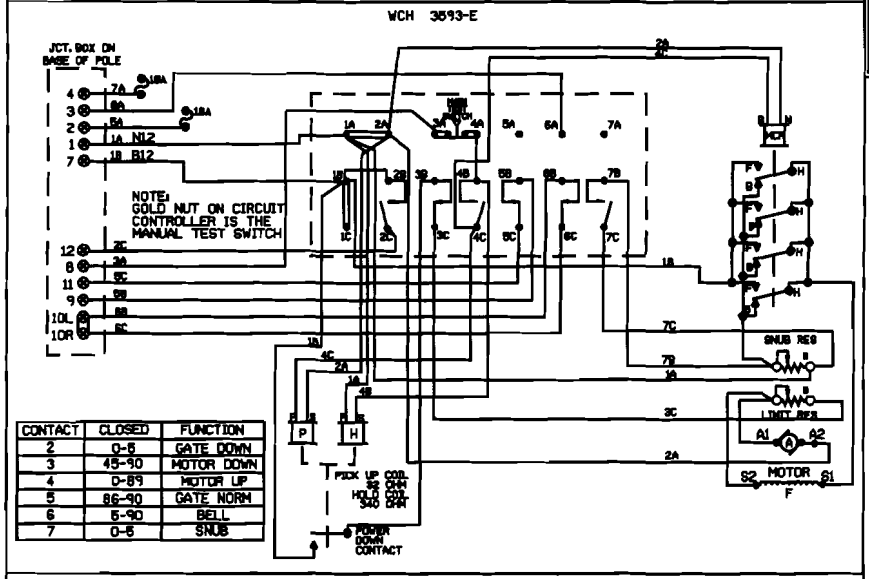

CONTACT	CLOSED	FUNCTION
2	0-5	GATE DOWN
3	45-90	MOTOR DOWN
4	0-89	MOTOR UP
5	86-90	GATE NORM
6	5-90	BELL
7	0-5	SNUB

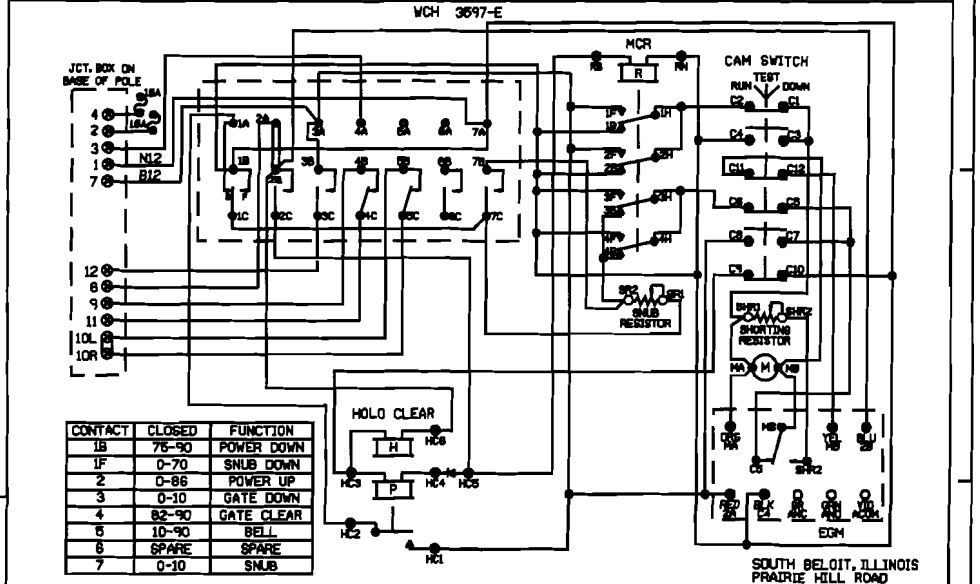

CONTACT	CLOSED	FUNCTION
1B	75-90	POWER DOWN
1F	0-70	SNUB DOWN
2	0-86	POWER UP
3	0-10	GATE DOWN
4	82-90	GATE CLEAR
5	10-90	BELL
6	SPARE	SPARE
7	0-10	SNUB

SHOW TYPE MECH. INSTALLED

ALL MECHANISMS SHOWN IN THE CLEAR POSITION

JCT. BOX ON BASE POLE

NEW SHEET

SOUTH BELOIT, ILLINOIS
PRAIRIE HILL ROAD
M.P. 88.76
BELOIT IND. LEAD
OFF HARVARD SUBDIVISION
D.O.T.#177 076W

03-07-08
INSTALL FLASHERS AND GATES WITH CWT AT M.P. 88.76
AFE 87189 JJL
SSC/JJF

MODIFICATION LEVEL	
Q.A. LAST LEVEL CHECKED	00
LAST LEVEL MOD THIS TYPICAL	00
LAST LEVEL BY DESIGNER	00
CHANGED FROM TYPICAL?	N

UNION PACIFIC
SIGNAL DESIGN

DES: SSC
DRN: SSC
CHK: JJL
A.F.E. 87189
ID: BEL8878.7X

UNION PACIFIC RAILROAD
SOUTH BELOIT, ILLINOIS
HIGHWAY CROSSING SIGNALS
CONTROL CIRCUITS
Office of Sr.AVP Engineering - Signal/TCO Omaha, Nebraska

DATE 03-07-08
SHEET 7
DWG 88.76
BEL-RTE

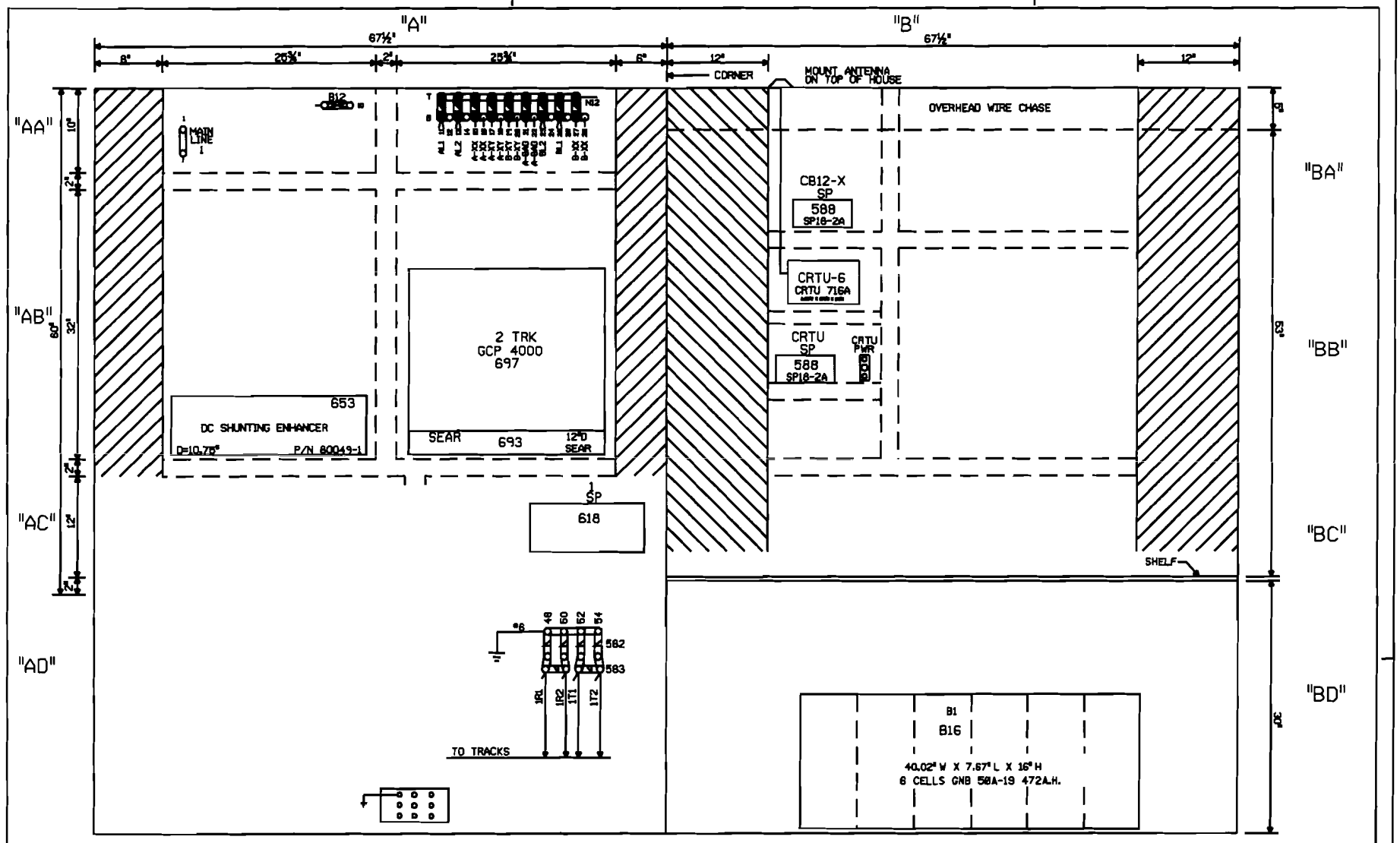

NOTE: ALL DIMENSIONS SHOWN ARE APPROXIMATE.

0 1 2 3 4 FEET

SCALE: 1.5 INCHES = 1 FOOT

SOUTH BELOIT, ILLINOIS
PRAIRIE HILL ROAD
M.P. 88.76
BELOIT IND. LEAD
OFF HARVARD SUBDIVISION
D.O.T.#177 076W

NEW SHEET

03-07-08 INSTALL FLASHERS AND GATES WITH CWT AT M.P. 88.76	MODIFICATION LEVEL		UNION PACIFIC SIGNAL DESIGN	DES: 99C	UNION PACIFIC RAILROAD	DATE 03-07-08	
	Q.A. LAST LEVEL CHECKED	DQ		DIG: 99C	SOUTH BELOIT, ILLINOIS	SHEET 8	
	LAST LEVEL MOD THIS TYPICAL	DQ		CHK: JJL	HIGHWAY CROSSING SIGNALS	DWG 88.76	
AFE 87189 JJL SSC/JJF	LAST LEVEL BY DESIGNER	DQ		A.F.E. 87189	CONTROL CIRCUITS	BEL-RTE	
	CHANGED FROM TYPICAL?	Y		ID: BEL8876.8X	Office of Sr.AVP Engineering - Signal/TCO Omaha, Nebraska		

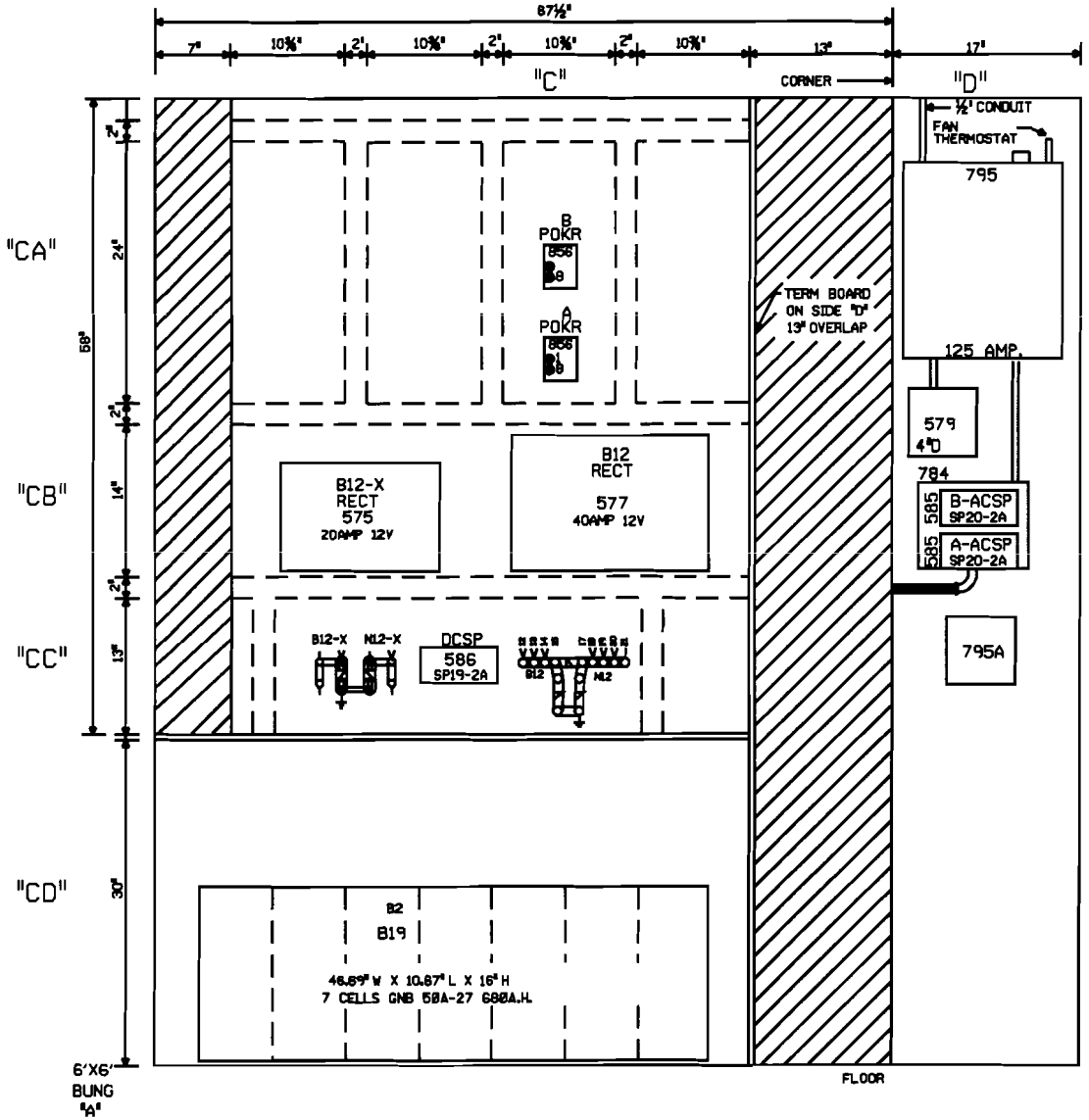

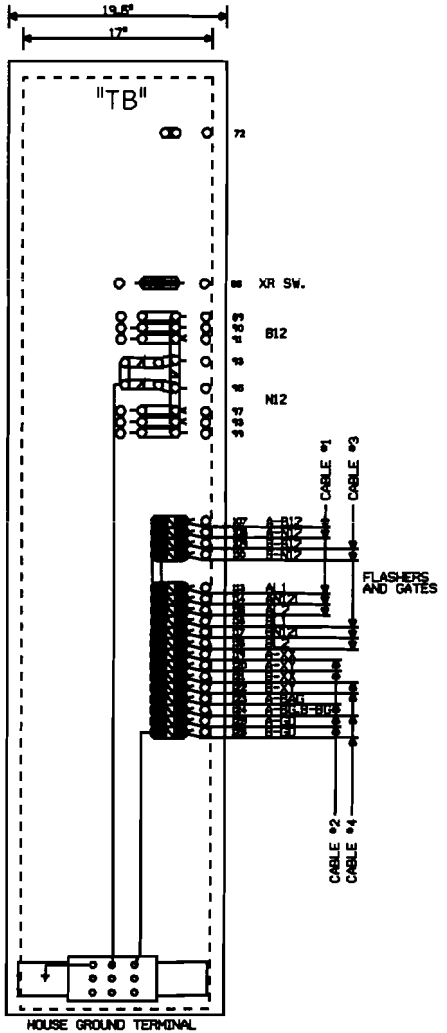

NOTE: ALL DIMENSIONS SHOWN ARE APPROXIMATE.

0 1 2 3 4 FEET

SCALE: 1.5 INCHES = 1 FOOT

NEW SHEET

SOUTH BELOIT, ILLINOIS
PRAIRIE HILL ROAD
M.P. 88.76
BELOIT IND. LEAD
OFF HARVARD SUBDIVISION
D.O.T.#177 076W

03-07-08 INSTALL FLASHERS AND GATES WITH CWT AT M.P. 88.76	
AFE 87189	JJL SSC/JJF

MODIFICATION LEVEL	
Q.A. LAST LEVEL CHECKED	00
LAST LEVEL MOD THIS TYPICAL	00
LAST LEVEL BY DESIGNER	00
CHANGED FROM TYPICAL?	Y

UNION PACIFIC
SIGNAL DESIGN

DES:	SSC
DIR:	SSC
CHK:	JJL
A.F.E.	87189
ID:	BEL8876.9X

UNION PACIFIC RAILROAD
SOUTH BELOIT, ILLINOIS
HIGHWAY CROSSING SIGNALS
CONTROL CIRCUITS
Offices of Re-AVP Engineering - Signal/CTC Omaha, Nebraska

DATE	03-07-08
SHEET	1
DWG	88.76
	BEL-RTE