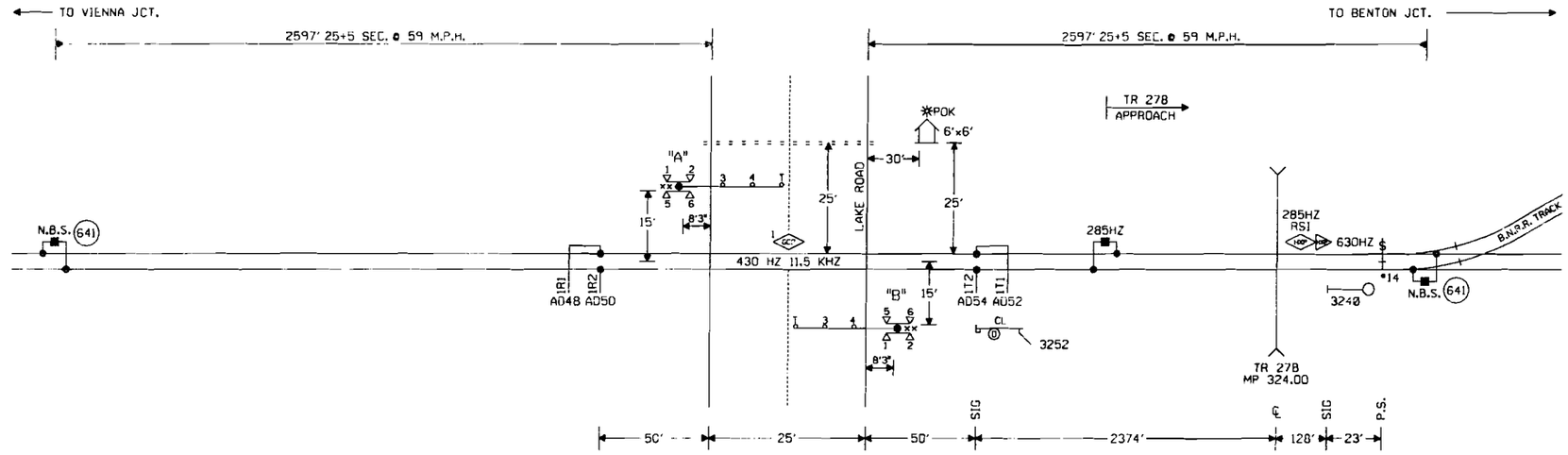

CONNECTS TO DRAWING 327.47

CONNECTS TO DRAWING 324.00

CONSTRUCTION NOTES:

1.) WIRE FOR BUT DO NOT INCLUDE THE CRTU. THE UNIT WILL BE RELOCATED IN THE FIELD.

2.) SIGNAL 3252 WILL BE WIRED IN THE NEW CROSSING BUNGALOW. INSTALL NEW SIGNAL CABLE.

NOTES:

⊗ = TWISTED WIRES
INSULATED 1 TWIST PER FT.
ALL TRACK WIRES 2C. #6

TRANSMITTER AND RECEIVER LEADS TO BE SEPARATED BY AT LEAST 12" IN TRENCH, LENGTHS SHOULD NOT EXCEED MANUFACTURES RECOMMENDATION.

TOP OF FOUNDATION TO BE AT SAME ELEVATION AS THE SURFACE OF THE TRAVELED WAY & NO MORE THAN 4" ABOVE THE SURFACE OF THE GROUND.

ALL BUNGALOW WIRING TO BE #16 AWG FLEX UNLESS OTHERWISE SPECIFIED EXCEPT ALL GROUND WIRE TO BE #6 AWG FLEX OR LARGER.

ALL WIRING IN GATE MECHANISM TO BE #10 "AWG FLEX".

REFER TO UP STANDARD DWG FOR BUNGALOW GROUNDING.

ALL LIGHTS TO BE 12" ROUNDELS.

= = = = = = 4" X 40' CONDUIT

LIGHTS: LED LIGHTS

GATE A: 21'
GATE B: 21'

xx = BELL

CRTU = CELLEMETRY

NEW SHEET

S ←—○—→ N

MARION, ILLINOIS
LAKE ROAD
M.P. 324.45
MARION SUBDIVISION
D.D.T.#167 669L

3-9-07 INSTALL NEW GATES AND A CCP 4000 IN A NEW BUNGALOW @ LAKE ROAD (M.P. 324.45) AFE 59669 JTB WITT/JJF	MODIFICATION LEVEL		UNION PACIFIC QUALITY PRODUCTIVITY SAFETY SIGNAL DESIGN	DES: WITT	UNION PACIFIC RAILROAD	DATE 3-9-07
	D.A. LAST LEVEL CHECKED	DP		DIG: WITT	MARION, ILLINOIS	SHEET 1
	LAST LEVEL MOD THIS TYPICAL	DP		CHK: J.T.B.	HIGHWAY CROSSING SIGNALS	DWG 324.45
	LAST LEVEL BY DESIGNER	DP		A.F.E. 59669	CONTROL CIRCUITS	S-303
	CHANGED FROM TYPICAL?	Y		ID: 030332445.1X	Office of AVP Engineering - Design Omaha, Nebraska	

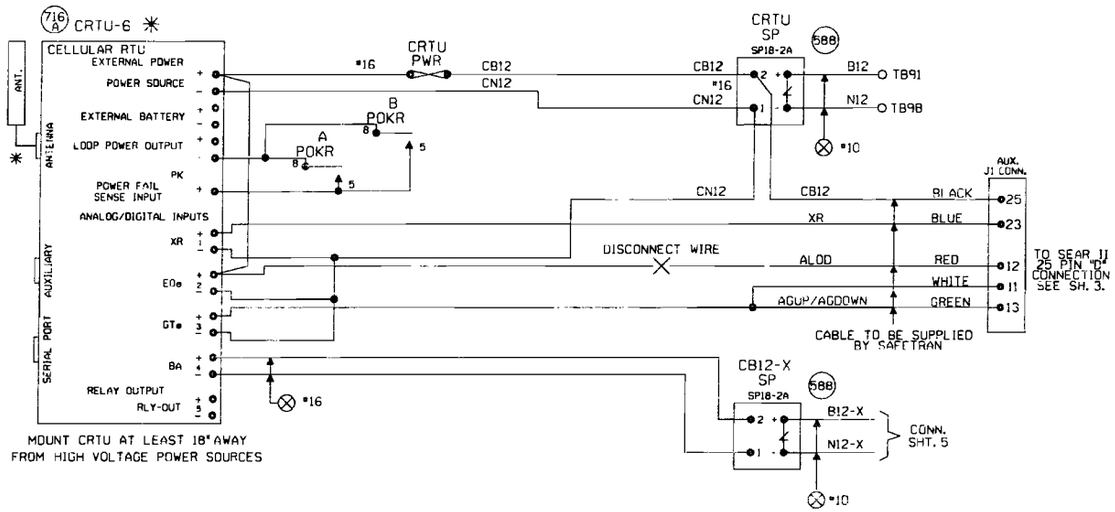

NOTES:

ALL DIODES 1N5060 OR 1N4004 UNLESS OTHERWISE NOTED.

✳ MOUNT ANTENNA ON TOP OF HOUSE.
INSTALL ANTENNA CABLE AND CHOKE PER TECH BULLENTIN #99-0015-00

ALL WIRES #18 UNLESS OTHERWISE NOTED.

ALL UNUSED 'NC' INPUTS MUST BE TIED HIGH TO BATTERY

ALL UNUSED ANALOG INPUTS MUST BE TIED HIGH TO BATTERY

ALL UNUSED 'NO' INPUTS MUST BE DISCONNECTED

NORMAL STATE FOR ANALOG CHANNELS IS EQUAL TO THE STORED NOMINAL VOLTAGE +120% OR -81%

CRTU FRONT PANEL DISPLAY CHART INDICATES NORMAL STATE

■ DIGITAL INPUT HIGH, OR POWER FAIL INPUT CLOSED
□ DIGITAL INPUT LOW, OR POWER FAIL INPUT OPEN

■ L ← LATCH IS SET BECAUSE CRTU DETECTED AN ALARM CONDITION
12.06V L ←

'sRUN MODE' 'sRUN MODE-SILENT'
CRTU RADIO IS DISABLED. REPROGRAM CRTU WITH LAPTOP.

ANALOG AND AC INPUT MODULES AND SURGE PROTECTORS MUST BE MOUNTED LESS THAN 18" FROM CRTU

ANALOG MODULES CONVERT DC VOLTAGE TO A SQUARE WAVE. A WORKING ANALOG MODULE WILL HAVE 4.5VDC TO 8.0VDC BETWEEN 5VOUT+ AND 6VOUT-. WHERE, 0VOLTS = 0HZ OUT, 30VOLTS = 10KHZ OUT, AND 15VOLTS = 5KHZ OUT
MAKE SURE CRTU IS PROGRAMMED WITH CALIBRATION SETTINGS.

CRTU CH4 CAN BE CONNECTED TO EITHER SP18 OR EQUIPMENT SIDE OF MDSA1, TAB 565

UNIT INSTALLATION AND SETUP

B.R. SITE ID WHERE: SSSS = 4 CHARACTER SUBDIVISION ID. [illegible] LEADING ZEROS AS REQUIRED. THE MAIN TRACK SUBDIVISION ID IS IN THE CURRENT TIMETABLE. INDUSTRIAL LEADS, LEASED, AND LEAD TRACKS LISTED WITHIN THE SUBDIVISION MAY HAVE THEIR OWN UNIQUE SUBDIVISION ID#. ALWAYS REFER TO CURRENT PRINTED COPY OF THE TIMETABLE.
LLLLLLLL = 8 CHARACTERS USE DOT# AT CROSSINGS, AND
WOLLLLLL = USE 'WO' THEN MP# AT WAYSIDE LOCATIONS.
EXAMPLE = 0785WO1801.5UT
HBLLLLLL = USE 'HB' THEN MP# AT HBD SITES.
EXAMPLE = 0100-HB55.62TX
THE MP# MUST USE A DECIMAL POINT TO SEPARATE NUMBERS. FILL WITH PRECEDING DASHES AS REQUIRED.
AA = 2 CHARACTER STATE NAME FOR ALL LOCATIONS. MUST BE 14 CHARACTERS LONG, NO SPACES ALLOWED.

SITE IDENTIFIER: SSSSLLLLLLLLAA	0056-167669LIL
OPERATION TO RESUME:	RUN
SIGNAL STRENGTH dBm	
CARRIER ID	
FIRMWARE VERSION	2.3.
SERIAL NUMBER	
BOOT VERSION:	
CMM VERSION:	
MIN ASSIGNMENT	
ESN: (MICROBURST ONLY)	
CONFIGURATION NET	CELLEMETRY
SILENCE INTERVAL	60 MINUTES
HEALTHCHECK INTERVAL	EVERY 2 DAYS
ALARM DEFER DELAY	240 MINUTES (4 HOURS)
SIGNAL STATUS	
SCADANET STATUS	
CALIBRATION CONSTANT CH1	
CALIBRATION CONSTANT CH2	
CALIBRATION CONSTANT CH3	
CALIBRATION CONSTANT CH4	
CALIBRATION CONSTANT PS	

FIELD PROVIDES: SAMPLED NOMINAL VOLTAGES, SCADANET STATUS CALIBRATION CONSTANTS, SERIAL NUMBER, AND SIGNAL STATUS.

CHANNEL SETUP STANDARD CONFIGURATION 32:XR,EOe,GTe,Ba

CHANNEL NORMAL STATE	SENSE (NO/NC)	NAME FUNCTION	RECOGNITION DELAY SECONDS ACTIVE	RECOGNITION DELAY SECONDS NORMAL	RETURN TO NORMAL	REPORTING MODE	ALARM LINKED CHANNEL	ALARM LINKED CRITERIA	EVENT LOGGING ENABLED OPTIONS
POWER FAIL (CH5) ■	POWER FAIL DETECT NO	PFin-PK AC POWER FAIL	7,200 ALARM	300 NORMAL	ENABLED	ALERT	DISABLED	N/A	ANALOG VALUE SENT
CH1 ■ □	DIGITAL INPUT NC	CH1-XR XR DOWN TO LONG	1,000 ALARM	1 NORMAL	ENABLED	ALERT	DISABLED	N/A	
CH2 □ ■	DIGITAL INPUT NO	CH2-EOe LIGHT OUT	120 ALARM	10 NORMAL	ENABLED	ALERT	DISABLED	N/A	
CH3 □ ■	DIGITAL INPUT NO	CH3-GTe GATES NOT UP/DOWN	120 ALARM	10 NORMAL	ENABLED	ALERT	DISABLED	N/A	DIGITAL EVENTS
CH4 STORED NOMINAL VOLTAGE	ANALOG INPUT N/A	CH4-Ba/V BATTERY MONITOR BATTERY LOW	600 ALARM	1200 NORMAL	ENABLED	ALERT W/UPDATE	DISABLED	N/A	PFin-PK CH1-XR CH2-EOe CH3-GTe
POWER SOURCE (CH6)	ANALOG INPUT N/A	PS-Ba/V BATTERY MONITOR BATTERY LOW	600 ALARM	1200 NORMAL	ENABLED	ALERT W/UPDATE	DISABLED	N/A	

ANALOG CHANNEL	USEFUL RANGE VOLTS LOW	USEFUL RANGE VOLTS HIGH	DISPLAYED RANGE VOLTS LOW	DISPLAYED RANGE VOLTS HIGH	RELATIVE ALARM POINT LOW	RELATIVE ALARM POINT HIGH	ABSOLUTE ALARM POINT LOW	ABSOLUTE ALARM POINT HIGH	AUTOMATIC UPDATE INTERVAL	STORED NOMINAL VOLTAGE	SAMPLED NOMINAL VOLTAGE
CH4	0.0	30.00	0.0	30.00	81%	120%	10.0	29.0	14 DAYS	12.69	
POWER SOURCE	0.0	30.00	0.0	30.00	81%	120%	10.0	29.0	14 DAYS	12.69	
RELAY OUTPUT	NAME RLY-OUT		ACTIVE SET-UP-OPEN		NORMAL CLR-ON-CLOSE		PULSE DURATION		15 SECONDS	StdCfg Ver: 2.3.3 REV'D 9-20-02	

MAINTENANCE OPERATIONS

TO START OR ABORT ANY PROCEDURE
1. PRESS THE 'CANCEL' BUTTON FIRST

WHEN RESPONDING TO A CALL, PUT THE CRTU IN THE 'SILENCE ALARMS' MODE

1. PRESS 'SELECT' AND THEN '+ ARROW' BUTTON UNTIL
   DISPLAY: ACTION?
   SILENCE ALARMS
2. PRESS THE 'SELECT' BUTTON TWICE
3. CORRECT PROBLEM AND SIMULATE NORMAL TRAIN MOVEMENT THROUGH THE LOCATION
4. EXAMINE EACH CHANNEL ON THE CRTU
5. PRESS THE '+/- ARROW' BUTTON. VERIFY ALL CHANNELS INDICATE A NORMAL STATE NORMAL STATES ARE ON THE CHANNEL SETUP CHART

CLEAR TIMERS, LATCHES AND SEND ALL NORMAL

1. DO STEPS #1 - #5 ABOVE, AND PRESS 'CANCEL'.
2. PRESS 'SELECT' AND THEN '- ARROW' BUTTON UNTIL
   DISPLAY: ACTION?
   SERVICE MODE
3. PRESS 'SELECT' AGAIN TO RESET TIMERS, AND IF
   DISPLAY: SERVICE MODE
   ALL NORMAL
4. PRESS 'SELECT' AGAIN TO CLEAR LATCHES, AND SEND ALL NORMAL. SKIP STEPS #5-#6.
5. HOWEVER, IF ALARMS ARE NOT CLEARED:
   DISPLAY: SERVICE MODE
   ALARMS PENDING/PRESENT
6. PRESS 'CANCEL', CORRECT PROBLEM AND REPEAT STEPS #2 THRU #5 UNTIL ALL NORMAL SENT.

TO CANCEL THE 'SILENCE ALARMS' MODE

1. PRESS 'SELECT' AND THEN '+ ARROW' BUTTON UNTIL
   DISPLAY: ACTION?
   CANCEL SILENCE
2. PRESS THE 'SELECT' BUTTON AGAIN

EXAMINE & SET BATTERY VOLTAGE NOMINAL VALUE

1. PRESS THE '+ ARROW' OR '- ARROW' BUTTON UNTIL THE DESIRED CHANNEL IS DISPLAYED.
   DISPLAY: PS-Ba
   13.83V NORMAL
2. VERIFY THE DISPLAYED READING WITH A DIGITAL VOLTMETER
3. PRESS THE 'SELECT' BUTTON, AND THE CRTU DISPLAY WILL SWITCH BETWEEN CURRENT/SAVED NOMINAL VOLTAGE VALUES.
   DISPLAY: NOMINAL ON #67 (CURRENT)
   13.83
   DISPLAY: SAVED NOMINAL 6 (STORED)
   12.69
4. PRESS THE 'SELECT' BUTTON AND THE CURRENT OR 'NOMINAL ON' VALUE WILL BE SAMPLED AND STORED AS THE 'SAVED NOMINAL' VALUE
5. VERIFY THE 'NOMINAL ON' AND 'SAVED NOMINAL' VALUES ARE EQUIVALENT, REPEAT STEPS #1 THRU #3 & PRESS THE 'CANCEL' BUTTON.

✳ = **TO BE INSTALLED IN THE FIELD.**

NEW SHEET

UPGRADE CRTU TO CONFIGURATION 32

MARION, ILLINOIS
LAKE ROAD
M.P. 324.45
MARION SUBDIVISION
O.O.T.#167 669L

3-9-07
INSTALL NEW GATES AND A DCP 4000 IN A NEW BUNGALOW @ LAKE ROAD (M.P. 324.45)
AFE 59669 JTB
WITT/JJF

MODIFICATION LEVEL	
Q.A. LAST LEVEL CHK'D.	DG
LAST LEVEL MOD. THIS TYP.	DG
LAST LEVEL BY DESIGNER.	DP
CHANGED FROM TYP.? Y/N	Y

UNION PACIFIC — SAFETY PRODUCTIVITY QUALITY — SIGNAL DESIGN

DES: WITT
DIG: WITT
CHK: J.T.B.
A.F.E. 59669
ID: D30332445.2X

UNION PACIFIC RAILROAD
MARION, ILLINOIS
HIGHWAY CROSSING SIGNALS
CONTROL CIRCUITS
Office of AVP Engineering - Design Omaha, Nebraska

DATE 3-9-07
SHEET 2
DWG 324.45
S-303

(REV.03.06.01) (CRTUCF032-28AT.3X)

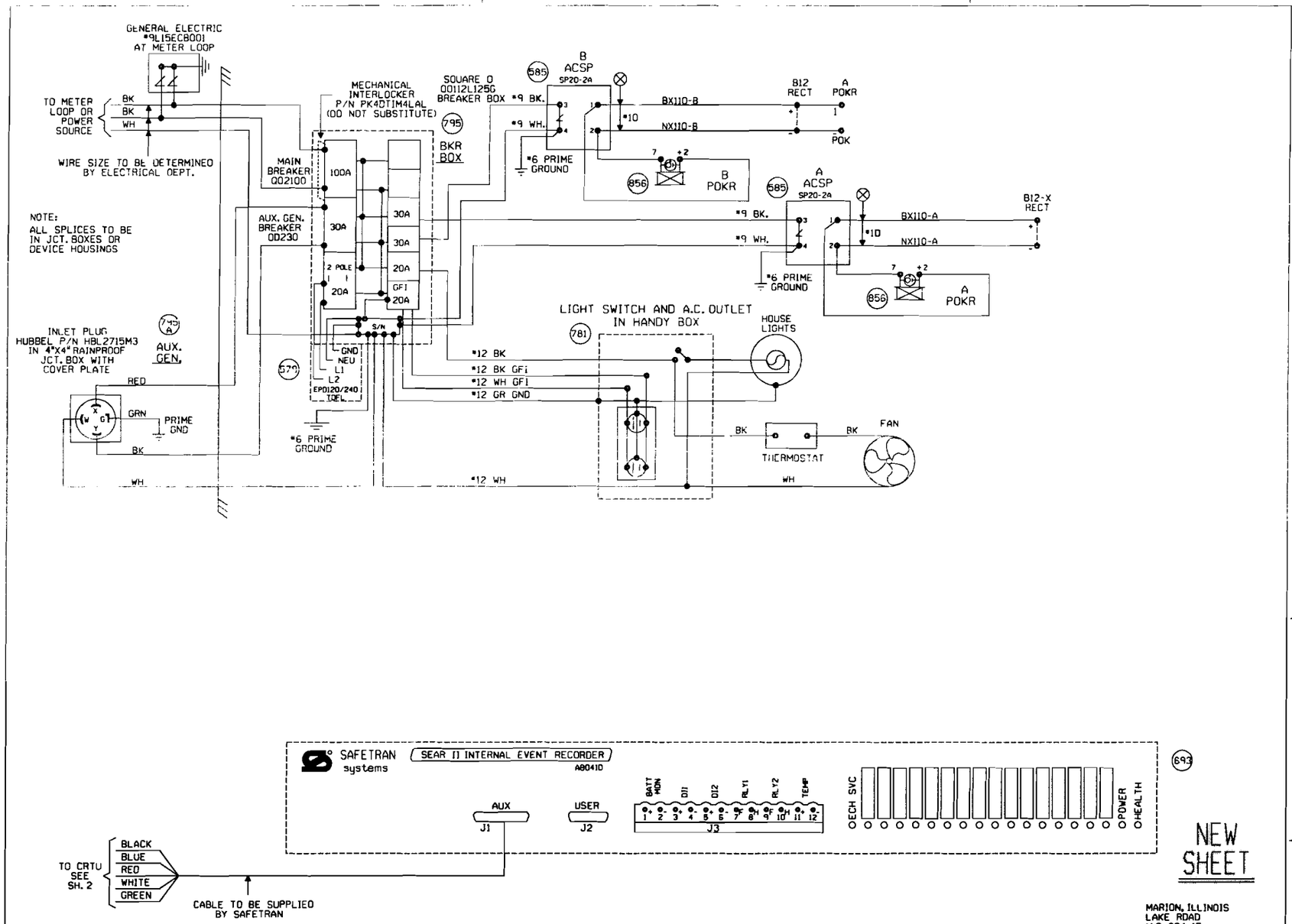

3-9-07 INSTALL NEW GATES AND A BCP 4000 IN A NEW BUNGALOW @ LAKE ROAD M.P. 324.451 AFE 59669 JTB WITT/JJF	MODIFICATION LEVEL		UNION PACIFIC SAFETY SIGNAL DESIGN	DES: WITT	UNION PACIFIC RAILROAD	DATE 3-9-07
	O.A. LAST LEVEL CHECKED	DP		DIG: WITT	MARION, ILLINOIS	SHEET 3
	LAST LEVEL MOD THIS TYPICAL	DP		CHK: J.T.B.	HIGHWAY CROSSING SIGNALS	DWG 324.45
	LAST LEVEL BY DESIGNER	DP		A.F.E. 59669	CONTROL CIRCUITS	S-303
	CHANGED FROM TYPICAL?	Y		ID: 030332445.3X	Office of AVP Engineering - Design Omaha, Nebraska	

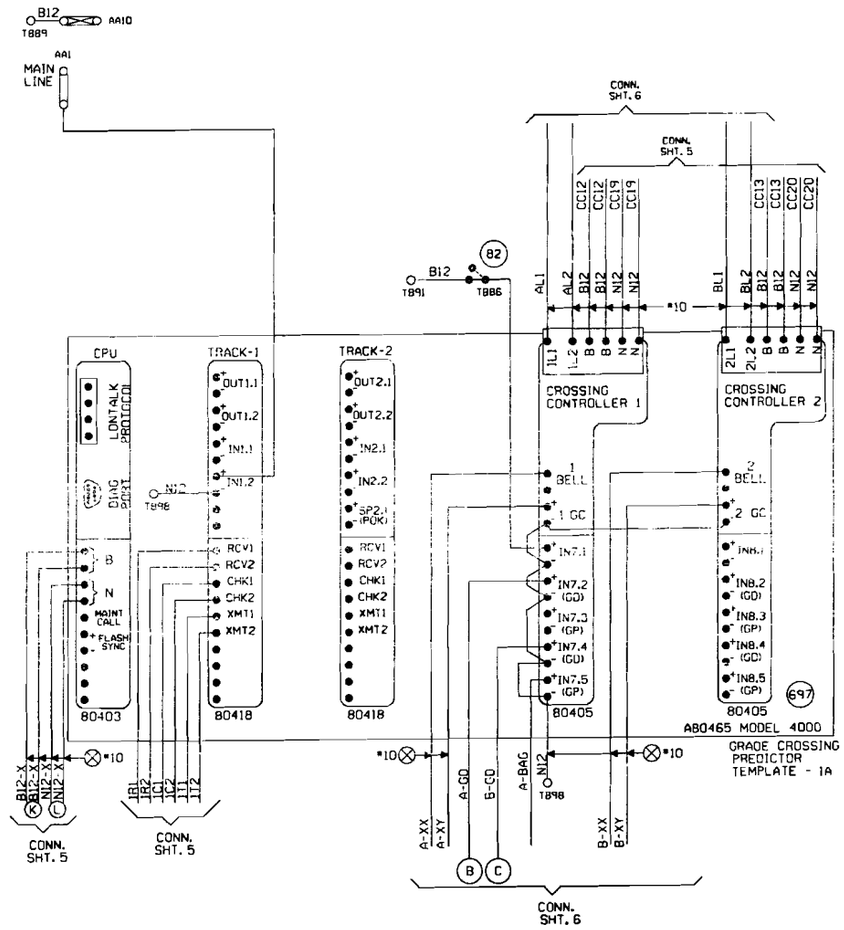

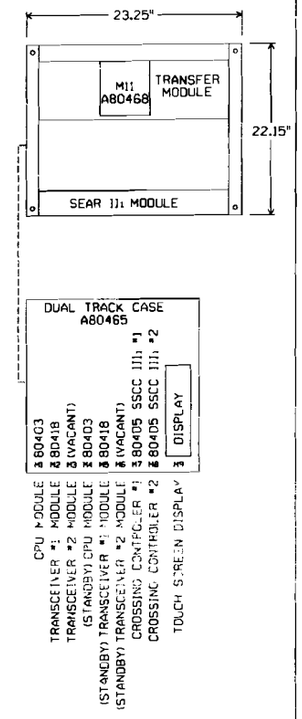

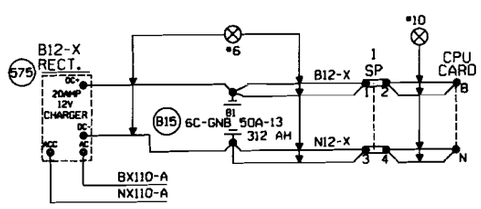

"Mf" FREQUENCY (HZ)	MAXIMUM TRANSMIT WIRE LENGTH (FEET)
86	100
114	125
156	150
211	200
285-970	250

NOTE:
EACH TRANSMITTER TO RAIL WIRE FROM XMT1 AND XMT2 MUST NOT EXCEED THE MAXIMUM LENGTH SPECIFIED IN THE TABLE SHOWN. THE RECEIVER WIRE LENGTH IS NOT CRITICAL. DOES NOT APPLY TO 6 TRACK WIRE APPLICATION.

NEW SHEET

MARION, ILLINOIS
LAKE ROAD
M.P. 324.45
MARION SUBDIVISION
D.O.T.#167 669L

3-9-07 INSTALL NEW GATES AND A GCP 4000 IN A NEW BUNGALOW @ LAKE ROAD (M.P. 324.45) AFE 59669 JTB WITT/JJF	MODIFICATION LEVEL		DES: WITT	UNION PACIFIC RAILROAD
	D.A. LAST LEVEL CHECKED	DP	DIG: WITT	MARION, ILLINOIS
	LAST LEVEL MOD THIS TYPICAL	DP	CHK: J.T.B.	HIGHWAY CROSSING SIGNALS
	LAST LEVEL BY DESIGNER	DP	A.F.E. 59669	CONTROL CIRCUITS
	CHANGED FROM TYPICAL?	Y	ID: 030332445.4X	Office of AVP Engineering - Design Omaha, Nebraska

UNION PACIFIC SIGNAL DESIGN

DATE 3-9-07
SHEET 4
DWG 324.45
S-303

Minimum Program Steps Report

Location and SIN

DOT Number: 167669L
Milepost Number: 324.45
Site Name: MARION, IL

SIN: 762010010016 *

* Parameter is part of office check number calculation.

MCF and Template Selection

MCF Name: GCP-16X-01-2.mcf
MCF Revision: 012
MCFCRC: 0DFE7A0C

Template = IA:6 Trk Bi *

* Parameter is part of office check number calculation.

Minimum Program Steps

TEMPLATE: track 1-Bi, Island
Track 1 : GCP Frequency = 430 Hz
Track 1 : Approach Distance = 2597 ft See Plans
Track 1 : Prime Warning Time = 25 sec *
Track 1 : GCP Transmit Level = Medium Set in Field
Track 1 : Isl Frequency = 11.5 kHz

TEMPLATE: AND 1 XR
AND 1 Enable Used = Yes *

TEMPLATE: IP assignment 1
IN 1.2 = Out Of Service IP 1 *

TEMPLATE: IP assignment SSCC
IN 7.1 = AND 1 XR Enable *

ADVANCED: out of service
OOS Control = OOS IPs *

* Parameter is part of office check number calculation.

Check Numbers

Office Check Number: 6FC9B2E8
Config. Check Number: 74\BAA30
(Based on MCF Revision 012)

Parameters not part of office check number calculation:

Track 1 : GCP Frequency = 430 Hz
Track 1 : Approach Distance = 2597 ft See Plans
Track 1 : GCP Transmit Level = Medium Set in Field
Track 1 : Isl Frequency = 11.5 kHz

Comments

<none>

Configuration Package File

Filename: 030332445_167669L.pac
Path: E:\Marion - Lake Road\GCP Program\
Date/Time:

NEW SHEET

MARION, ILLINOIS
LAKE ROAD
M.P. 324.45
MARION SUBDIVISION
O.O.T.#167 669L

				3-9-07 INSTALL NEW GATES AND A GCP 4000 IN A NEW BUNGALOW @ LAKE ROAD M.P. 324.45 AFE 59669 JTB WITT/JJF	NOTE: Actual OFFSET and ISLAND distances must be entered by field personnel.	UNION PACIFIC QUALITY PRODUCTIVITY SAFETY SIGNAL DESIGN	DES: WITT DIG: WITT CHK: J.T.B. A.F.E. 59669 ID: 030332445.4AX	UNION PACIFIC RAILROAD MARION, ILLINOIS HIGHWAY CROSSING SIGNALS CONTROL CIRCUITS Office of AVP Engineering - Design Omaha, Nebraska	DATE 3-9-07 SHEET 4A DWG 324.45 S-303

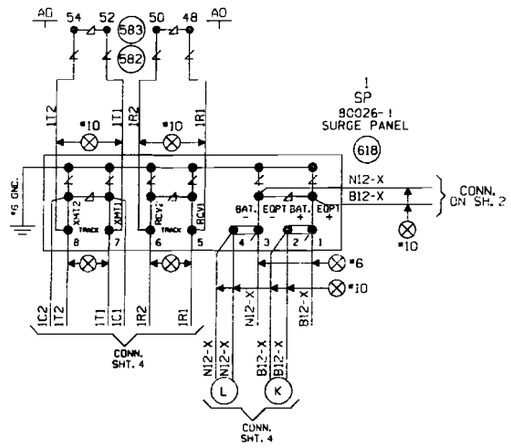

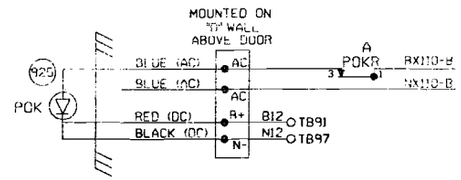

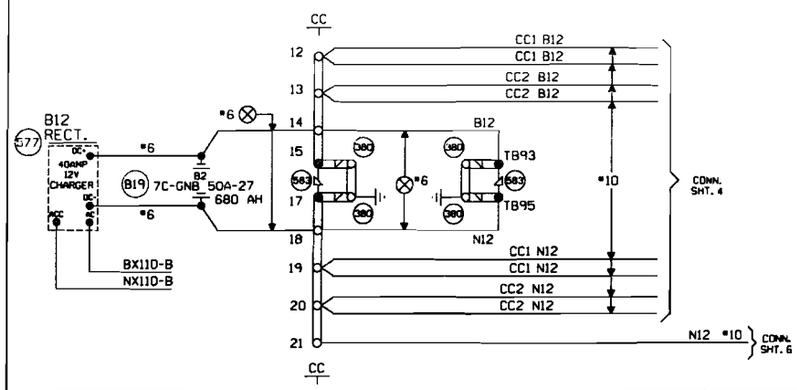

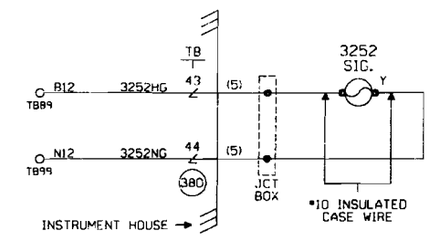

NEW SHEET

CABLE TABULATION

CABLE *5 5C *6 HOUSE TO SIGNAL 3252

MARION, ILLINOIS
LAKE ROAD
M.P. 324.45
MARION SUBDIVISION
O.O.T.*167 669L

3-9-07 INSTALL NEW GATES AND A BCP 4000 IN A NEW BUNGALOW @ LAKE ROAD M.P. 324.45 AFE 59669 JTB WITT/JJF	MODIFICATION LEVEL		UNION PACIFIC SAFETY SIGNAL DESIGN	DES: WITT	UNION PACIFIC RAILROAD
	O.A. LAST LEVEL CHECKED	DP		DIG: WITT	MARION, ILLINOIS HIGHWAY CROSSING SIGNALS CONTROL CIRCUITS
	LAST LEVEL MOD THIS TYPICAL	DP		CHK: J.T.B.	
	LAST LEVEL BY DESIGNER	DP		A.F.E. 59669	
	CHANGED FROM TYPICAL?	Y		ID: 030332445.5X	Office of AVP Engineering - Design Omaha, Nebraska

DATE 3-9-07
SHEET 5
DWG 324.45
S-303

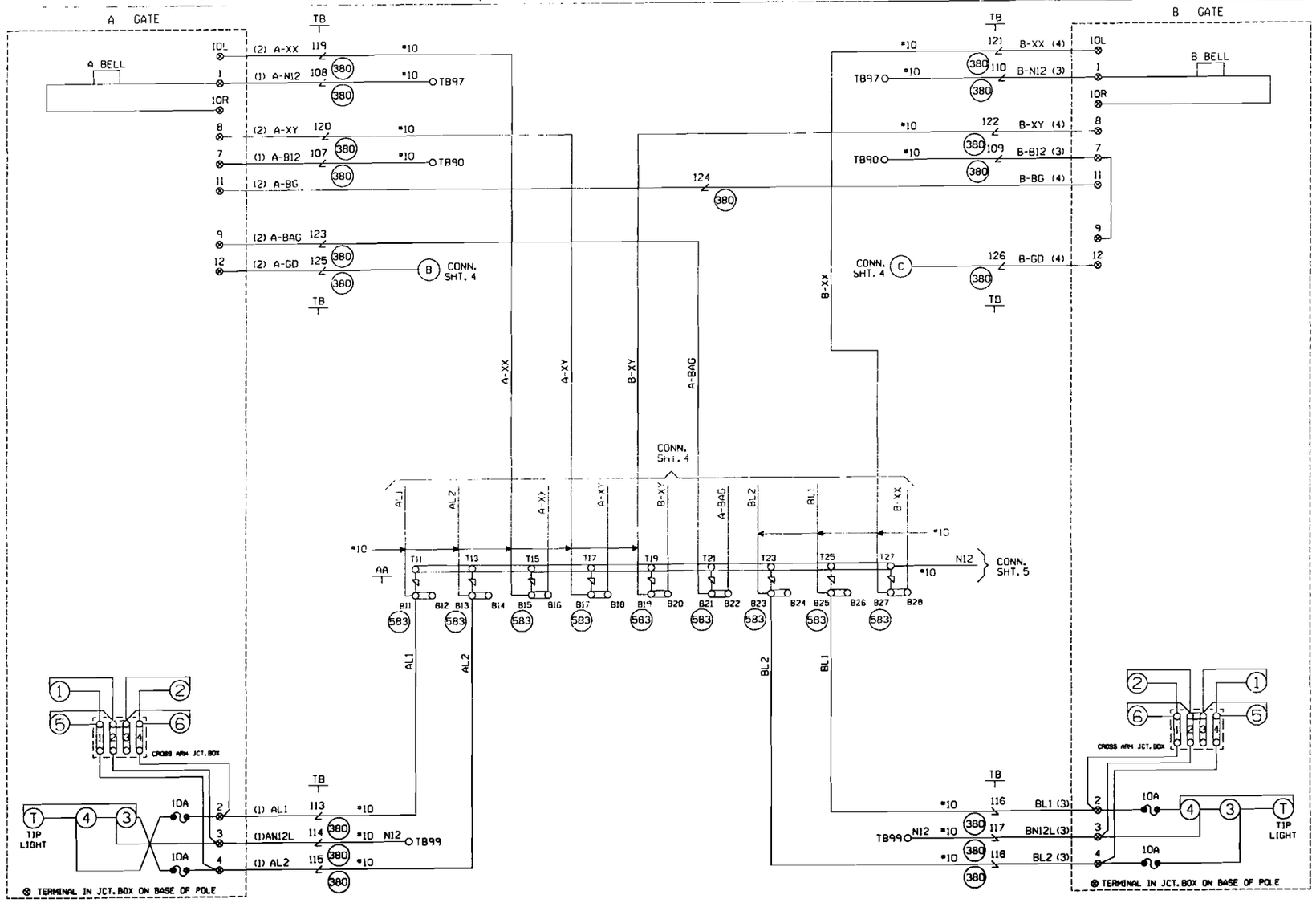

CABLE TABULATION

CABLE NO. 1 5C. NO.6 U.G.B.T.
CABLE NO. 2 7C. NO.14 U.G.B.T.
CABLE NO. 3 5C. NO.6 U.G.B.T.
CABLE NO. 4 7C. NO.14 U.G.B.T.

NEW SHEET

MARION, ILLINOIS
LAKE ROAD
M.P. 324.45
MARION SUBDIVISION
O.D.T.#167 669L

3-9-07 INSTALL NEW GATES AND A CCP 4000 IN A NEW BUNGALOW @ LAKE ROAD (M.P. 324.45) AFE 59669 JTB WITT/JJF	MODIFICATION LEVEL		UNION PACIFIC SAFETY SIGNAL DESIGN	DES: WITT	UNION PACIFIC RAILROAD
	Q.A. LAST LEVEL CHECKED	DP		DIG: WITT	MARION, ILLINOIS
	LAST LEVEL MOD THIS TYPICAL	DP		CHK: J.T.B.	HIGHWAY CROSSING SIGNALS
	LAST LEVEL BY DESIGNER	DP		A.F.E. 59669	CONTROL CIRCUITS
	CHANGED FROM TYPICAL?	Y		ID= 030332445.6X	Office of AVP Engineering - Design Omaha, Nebraska

DATE 3-9-07
SHEET 6
DWG 324.45
S-303

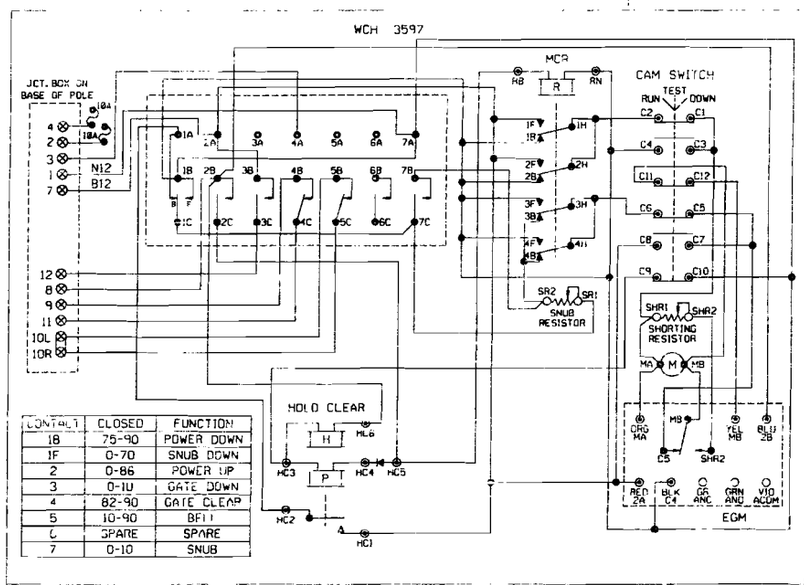

CONTACT	CLOSED	FUNCTION
1B	75-90	POWER DOWN
1F	0-70	SNUB DOWN
2	0-86	POWER UP
3	0-10	GATE DOWN
4	82-90	GATE CLEAR
5	10-90	BELL
6	SPARE	SPARE
7	0-10	SNUB

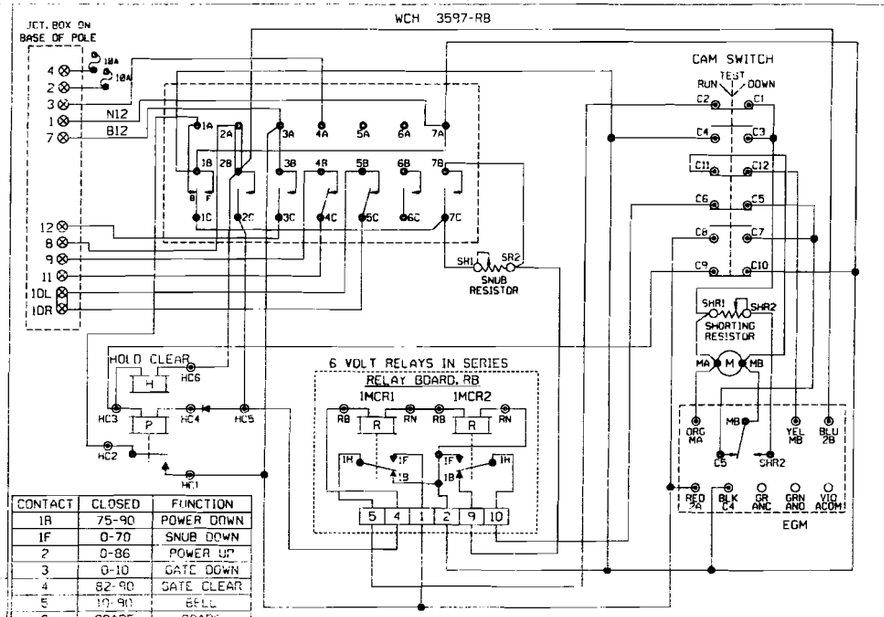

CONTACT	CLOSED	FUNCTION
1B	75-90	POWER DOWN
1F	0-70	SNUB DOWN
2	0-86	POWER UP
3	0-10	GATE DOWN
4	82-90	GATE CLEAR
5	10-90	BELL
6	SPARE	SPARE
7	0-10	SNUB

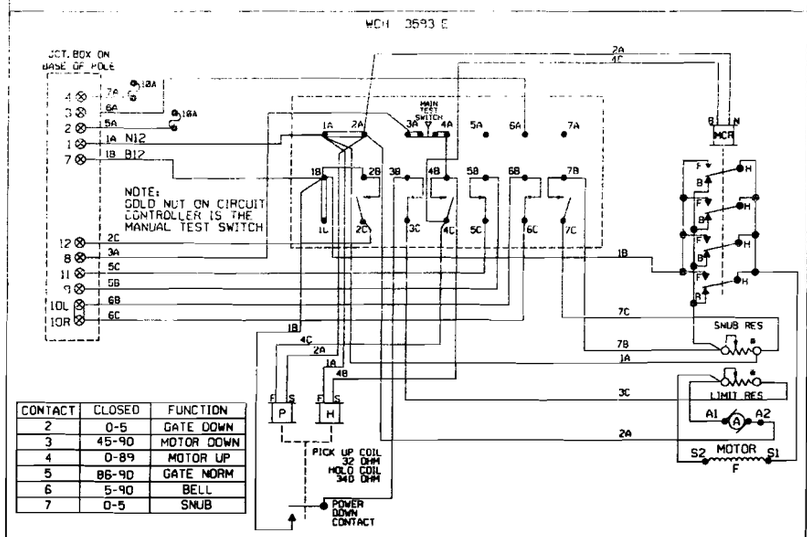

CONTACT	CLOSED	FUNCTION
2	0-5	GATE DOWN
3	45-90	MOTOR DOWN
4	0-89	MOTOR UP
5	86-90	GATE NORM
6	5-90	BELL
7	0-5	SNUB

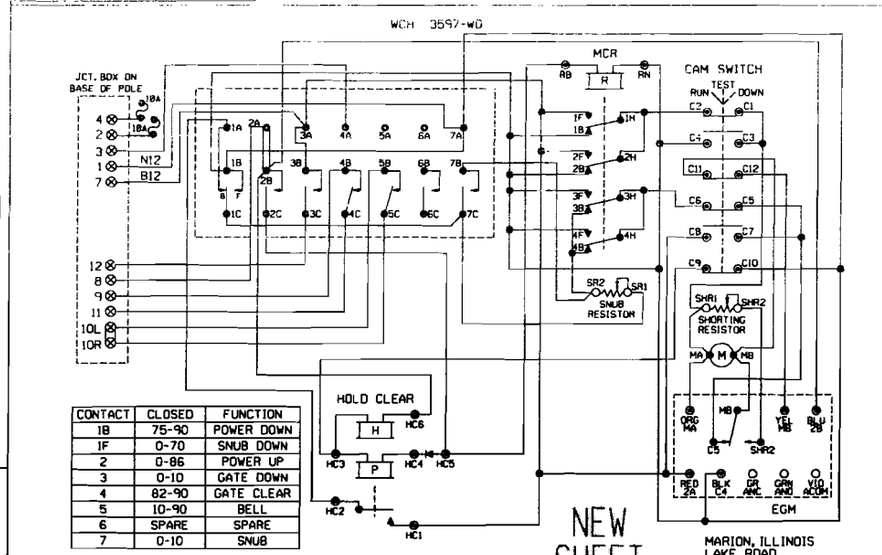

CONTACT	CLOSED	FUNCTION
1B	75-90	POWER DOWN
1F	0-70	SNUB DOWN
2	0-86	POWER UP
3	0-10	GATE DOWN
4	82-90	GATE CLEAR
5	10-90	BELL
6	SPARE	SPARE
7	0-10	SNUB

SHOW TYPE MECH. INSTALLED

ALL MECHANISMS SHOWN IN THE CLEAR POSITION

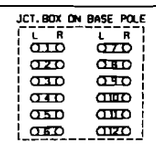

NEW SHEET

MARION, ILLINOIS
LAKE ROAD
M.P. 324.45
MARION SUBDIVISION
D.O.T.#167 669L

3-9-07
INSTALL NEW GATES AND A GCP 4000 IN A NEW BUNGALOW @ LAKE ROAD M.P. 324.45
AFE 59669 JTB WITT/JJF

MODIFICATION LEVEL	
D.A. LAST LEVEL CHECKED	DP
LAST LEVEL MOD THIS TYPICAL	DP
LAST LEVEL BY DESIGNER	DP
CHANGED FROM TYPICAL?	N

UNION PACIFIC
QUALITY PRODUCTIVITY SAFETY
SIGNAL DESIGN

DES: WITT
DIG: WITT
CHK: J.T.B.
A.F.E. 59669
ID: 030332445.7X

UNION PACIFIC RAILROAD

MARION, ILLINOIS
HIGHWAY CROSSING SIGNALS
CONTROL CIRCUITS

Office of AVP Engineering - Design Omaha, Nebraska

DATE 3-9-07
SHEET 7
DWG 324.45
S-303

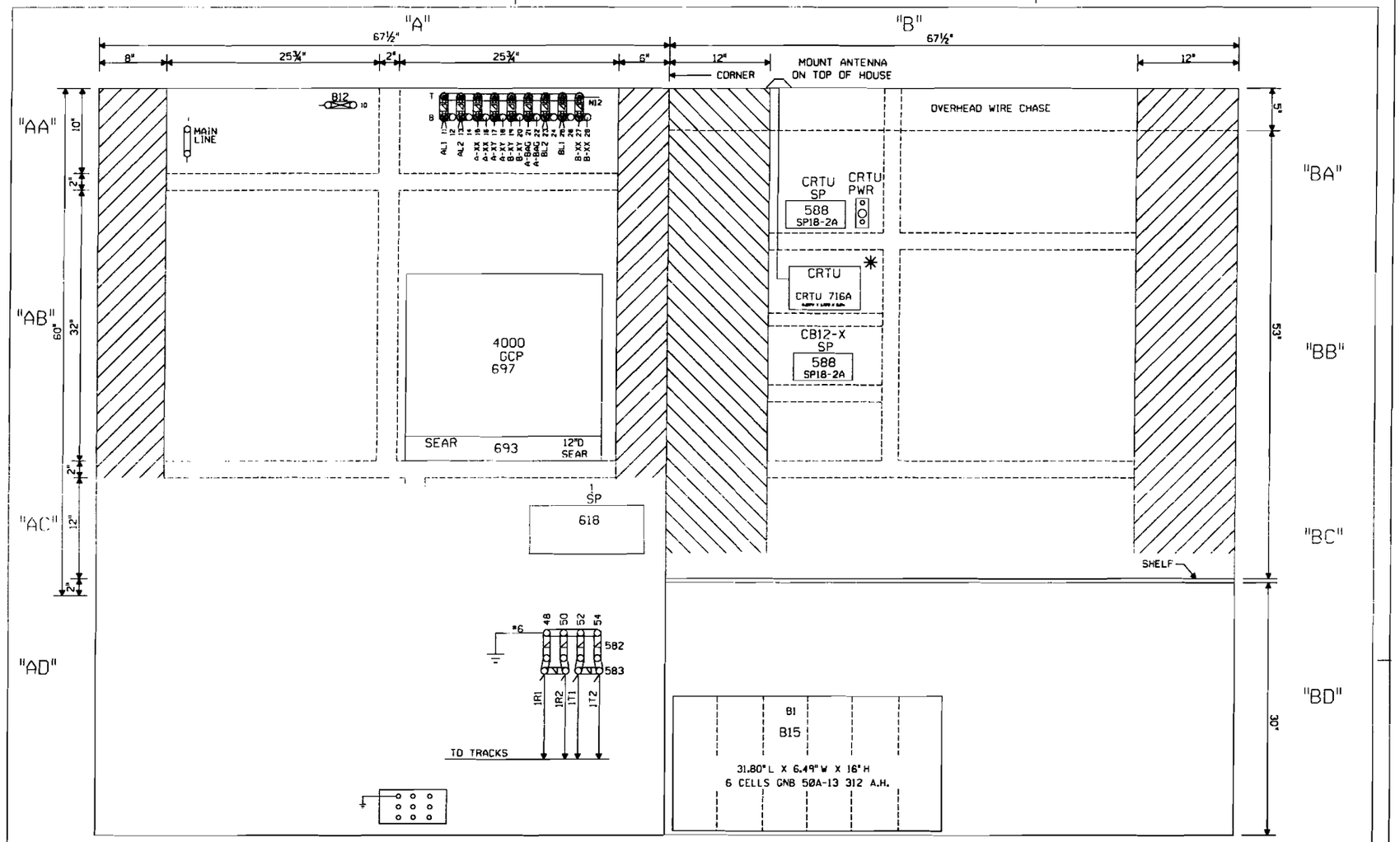

NOTE: ALL DIMENSIONS SHOWN ARE APPROXIMATE.

0 1 2 3 4 FEET

SCALE: 1.5 INCHES = 1 FOOT

✳ = TO BE INSTALLED IN THE FIELD.

NEW SHEET

MARION, ILLINOIS
LAKE ROAD
M.P. 324.45
MARION SUBDIVISION
O.O.T.#167 669L

3-9-07 INSTALL NEW GATES AND A GCP 4000 IN A NEW BUNGALOW @ LAKE ROAD M.P. 324.45 AFE 59669 JTB WITT/JJF	MODIFICATION LEVEL		UNION PACIFIC SIGNAL DESIGN	DES: WITT	UNION PACIFIC RAILROAD	DATE 3-9-07	
	D.A. LAST LEVEL CHECKED	DP		DIG: WITT	MARION, ILLINOIS	SHEET 8	
	LAST LEVEL MOD THIS TYPICAL	DP		CHK: J.T.B.	HIGHWAY CROSSING SIGNALS	DWG 324.45	
	LAST LEVEL BY DESIGNER	DP		A.F.E. 59669	CONTROL CIRCUITS	S-303	
	CHANGED FROM TYPICAL?	Y		ID: 030332445.BX	Office of AVP Engineering - Design Omaha, Nebraska		

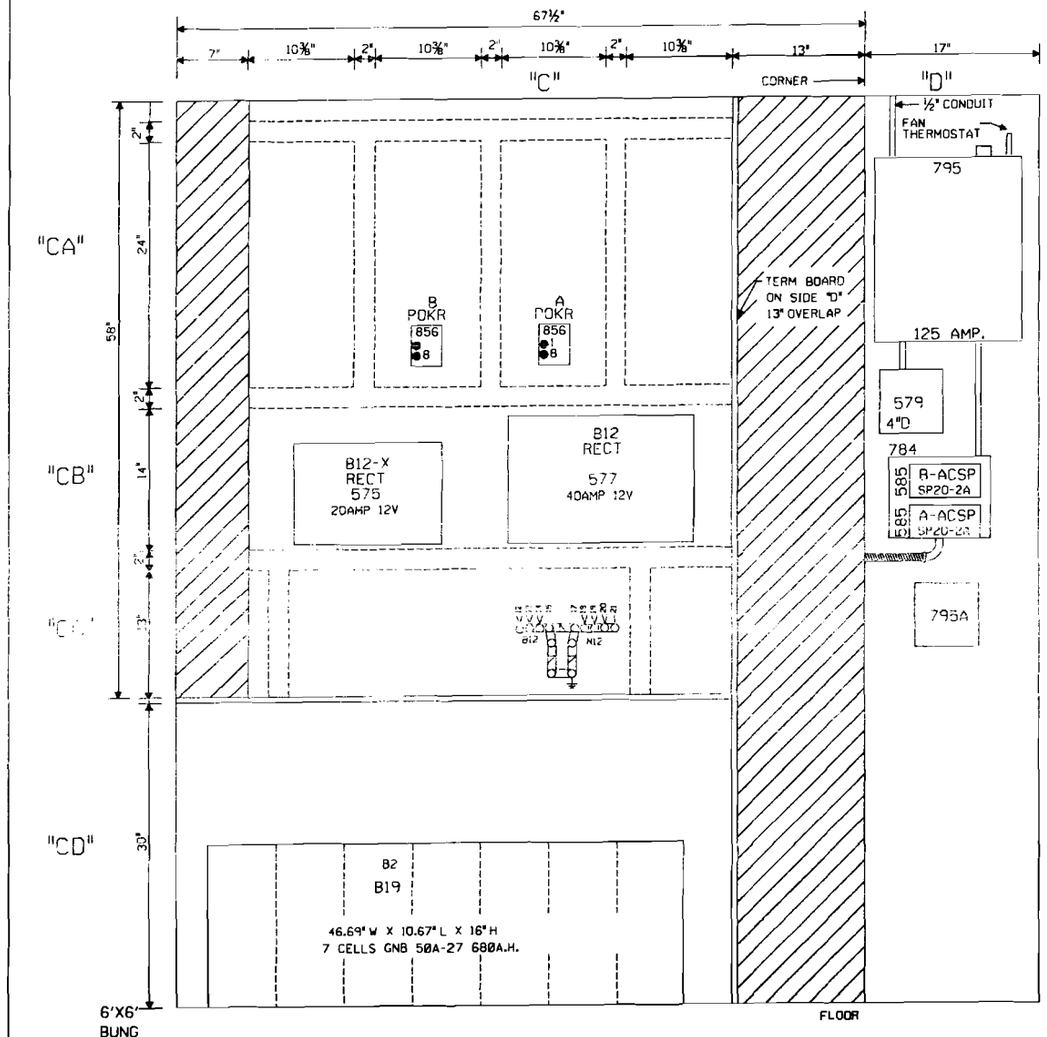

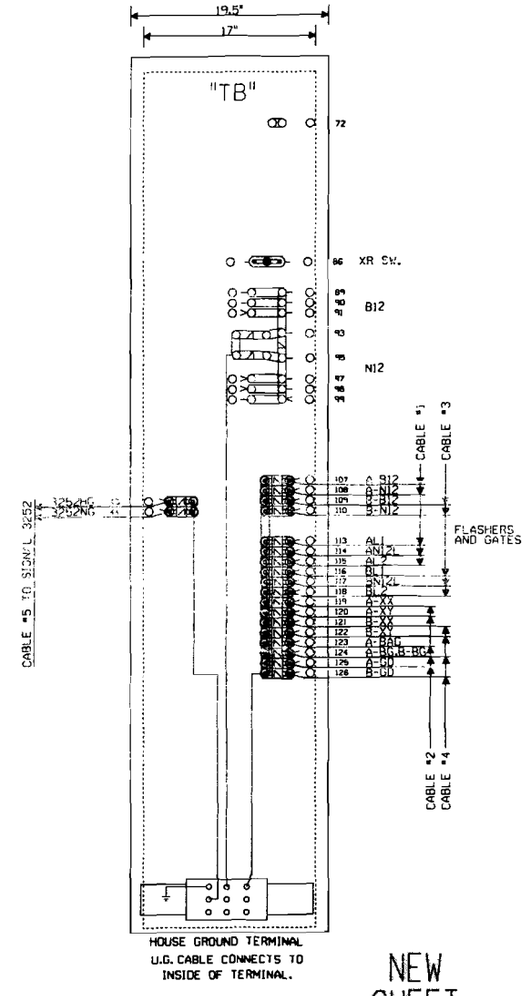

NEW SHEET

NOTE: ALL DIMENSIONS SHOWN ARE APPROXIMATE.

0 1 2 3 4 FEET

SCALE: 1.5 INCHES = 1 FOOT

MARION, ILLINOIS
LAKE ROAD
M.P. 324.45
MARION SUBDIVISION
D.O.T.#167 669L

3-9-07 INSTALL NEW GATES AND A NEW 1000 GAL FUEL TANK. A NEW BUNGALOW W LOCK DOWN. M.P. 324.45 AFE 59669 JTB WITT/JJF	MODIFICATION LEVEL		UNION PACIFIC SAFETY SIGNAL DESIGN	DES: WITT	UNION PACIFIC RAILROAD	DATE 3-9-07
	O.A. LAST LEVEL CHECKED	DP		DIG: WITT	MARION, ILLINOIS	SHEET 9
	LAST LEVEL MOD THIS TYPICAL	DP		CHK: J.T.B.	HIGHWAY CROSSING SIGNALS	DWG 324.45
	LAST LEVEL BY DESIGNER	DP		A.F.E. 59669	CONTROL CIRCUITS	S-303
	CHANGED FROM TYPICAL?	Y		ID: 030332445.9X	Office of AVP Engineering - Design, Omaha, Nebraska	

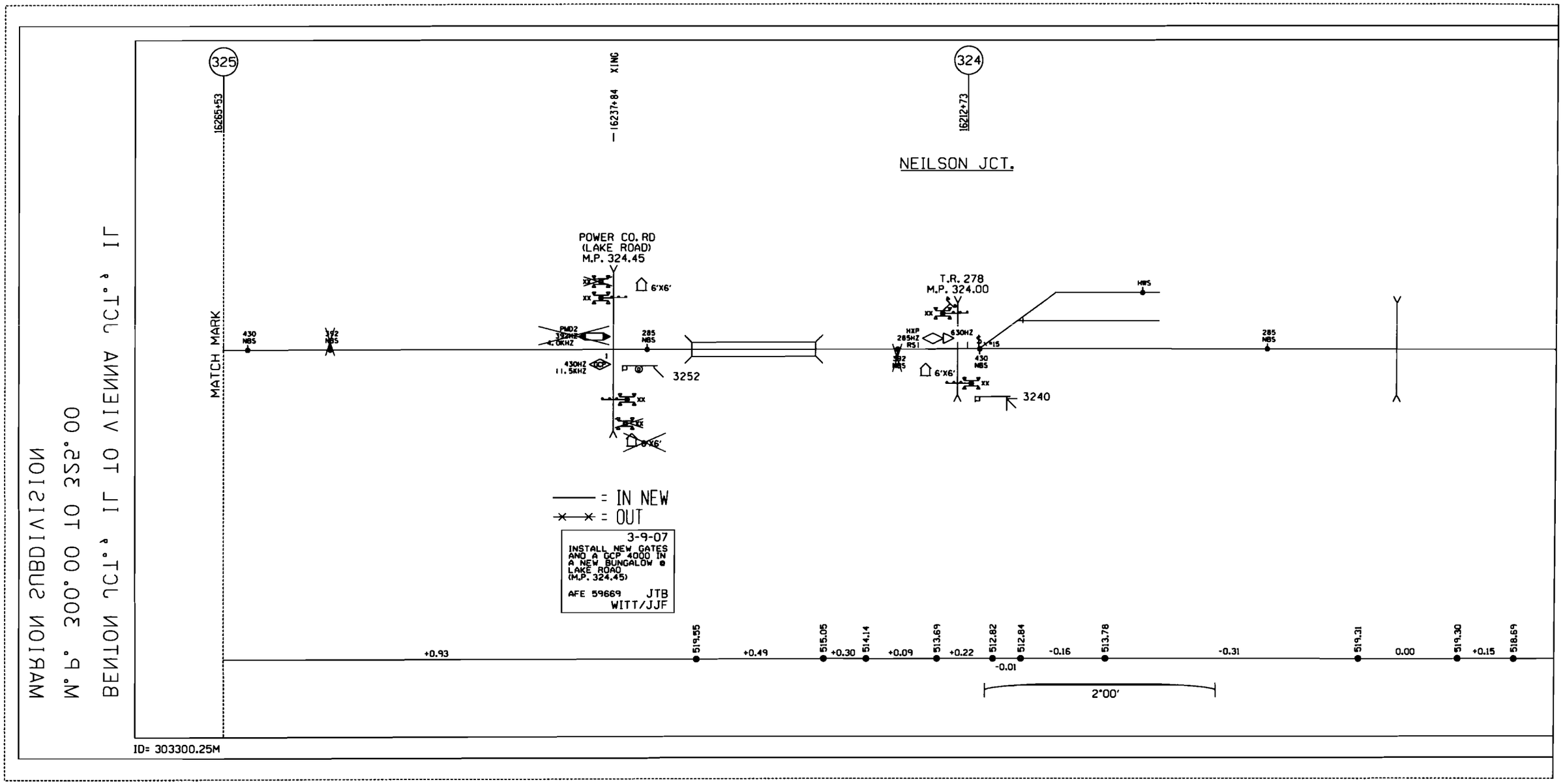
MARION SUBDIVISION
M.P. 300.00 TO 325.00
BENTON JCT. & IJ TO VIENNA JCT. & IJ
325
16265+53
MATCH MARK
16237+84
XING
324
16212+73
NEILSON JCT.
POWER CO. RD
(LAKE ROAD)
M.P. 324.45
6'X6'
PMD2
392HZ
4.0KHZ
430HZ
11.5KHZ
285
NBS
3252
T.R. 278
M.P. 324.00
HXP
285HZ
RS1
630HZ
430
NBS
6'X6'
3240
HWS
285
NBS
= IN NEW
= OUT
3-9-07
INSTALL NEW GATES
AND A GCP 4000 IN
A NEW BUNGALOW @
LAKE ROAD
(M.P. 324.45)
AFE 59669 JTB
WITT/JJF
+0.93
519.55
+0.49
515.05
+0.30
514.14
+0.09
513.69
+0.22
512.82
512.84
-0.01
-0.16
513.78
-0.31
519.31
0.00
519.30
+0.15
518.69
2°00'
ID= 303300.25M