ELGIN, JOLIET & EASTERN RAILWAY COMPANY
HIGHWAY CROSSING WARNING SYSTEM

116TH STREET
FRANKFORT, ILLINOIS

RECEIVED
DEC 1 8 2008
Illinois Commerce Commission
RAIL SAFETY SECTION

DOT 260620E
EJ&E MP 11.49 ESD

This drawing was created using CADD. All field and office changes are to be routed through Main Office in East Joliet. DO NOT make changes to this original copy without notifying the Engineer-Signals, Communications & Electrical

NO	DESCRIPTION	BY	CHK'D	DATE
8				
7				
6				
5				
4				
3				
2				
1				
	AS IN SERVICE	TWH	TWH	XX/XX

REVISIONS

ELGIN, JOLIET & EASTERN RAILWAY COMPANY

HIGHWAY CROSSING WARNING SYSTEM
116TH STREET
FRANKFORT, ILLINOIS

ENGINEERING SERVICES
JOLIET, IL 60432
SCALE NONE

CHECKED BY TWH
IN CHARGE OF TWH

DRAWN BY TWH
DATE 12/16/08
CAD ID 260620E-COV.DWG

FILE NO. 260620E
SHEET NO. COVER
CONT'D ON 0

DESCRIPTION	SHEET NO.	DWG. NO.
COVER	COVER	260620E-COV
INDEX	0	260620E-000
CROSSING DETAIL AND APPROACH TABLES	1	260620E-001
HXP WIRING	2	260620E-002
REMOTE INTERCONNECT CIRCUITS	3	260620E-003
HXP SETUP SHEET	4	260620E-004
GATE & LAMP CONTROL WIRING "A"	5	260620E-005
GATE & LAMP CONTROL WIRING "B"	5A	260620E-05A
CABLE & ARRESTOR PANEL WIRING "A"	6	260620E-006
CABLE & ARRESTOR PANEL WIRING "B"	6A	260620E-06A
CROSSING GATE WIRING "A"	7	260620E-007
CROSSING GATE WIRING "B"	7A	260620E-07A
BATTERY BUS & RECTIFIER WIRING XING	8	260620E-008
HCA WIRING	9	260620E-009
RTU WIRING	9A	260620E-009A
EQUIPMENT RACK DETAIL	10	260620E-010
HOUSE LAYOUT	11	260620E-011
AC POWER DISTRIBUTION	12	260620E-012
TERMINAL BOARD LAYOUT	13	260620E-013
WALL "A" LAYOUT DETAIL	14	260620E-014

This drawing was created using CADD. All field and office changes are to be routed through Main Office in East Joliet DO NOT make changes to this original copy without notifying the Engineer-Signals, Communications & Electrical

NO	DESCRIPTION	BY	CHK'D	DATE
8				
7				
6				
5				
4				
3				
2				
1				
	AS IN SERVICE	TWH	TWH	XX/XX

REVISIONS

ELGIN, JOLIET & EASTERN RAILWAY COMPANY

HIGHWAY CROSSING WARNING SYSTEM
116TH STREET
FRANKFORT, ILLINOIS

ENGINEERING SERVICES
JOLIET, IL 60432
SCALE NONE

CHECKED BY TWH
IN CHARGE OF TWH

DRAWN BY TWH
DATE 12/18/08
CAD ID 260620E-000.DWG

FILE NO. 260620E | SHEET NO. 0 | CONT'D ON 1

HOUSE CABLE ASSIGNMENTS	
DEVICE	CABLE(S)
GATE "A1"	2-7C #6
GATE "B1"	2-7C #6
1R1,1R2	2C #6 TW
1T1, 1T2/1ETB, 1ETN	2C #6 TW
2R1, 2R2	2C #6 TW
2T1, 2T2/1WTB, 1WTN	2C #6 TW
AC POWER	3C #2
PED GATE "B2"	7C #6
PED GATE "A2"	7C #6

DOT: 260620E	EJ&E MP 11.49 ESD	
EQUIPMENT	QUADRANT	
	NW	SE
PED GATES (MODEL)	US&S 95	US&S 95
GATE (MODEL)	US&S 95	US&S 95
GATE (FT')	22	22
ADDITIONAL LIGHTS	–	–
BELL	X	X
X BUCKS	X	X
MULTIPLE TRACK SIGNS	–	–

GUIDELINES FOR CROSSING WARNING TIME AND APPROACH DISTANCE CALCULATIONS	
MAX SPEED IN MPH	45
CT IN SECONDS	0
BUFFER TIME IN SECONDS	5
TOTAL WARNING TIME IN SECONDS	25
ERT IN SECONDS	8
APT IN SECONDS	0
TOTAL APPROACH TIME IN SECONDS	33
APPROACH DISTANCE IN FEET	2183
SPEED IN FPS	66
CLEARANCE TIME CALCULATION	
LONGEST DISTANCE IN FEET (35 FEET MINIMUM)	--
CT IN SECONDS	--
APT – ADVANCED PRE-EMPTION ERT – EQUIPMENT RESPONSE TIME CT – CLEARANCE TIME	

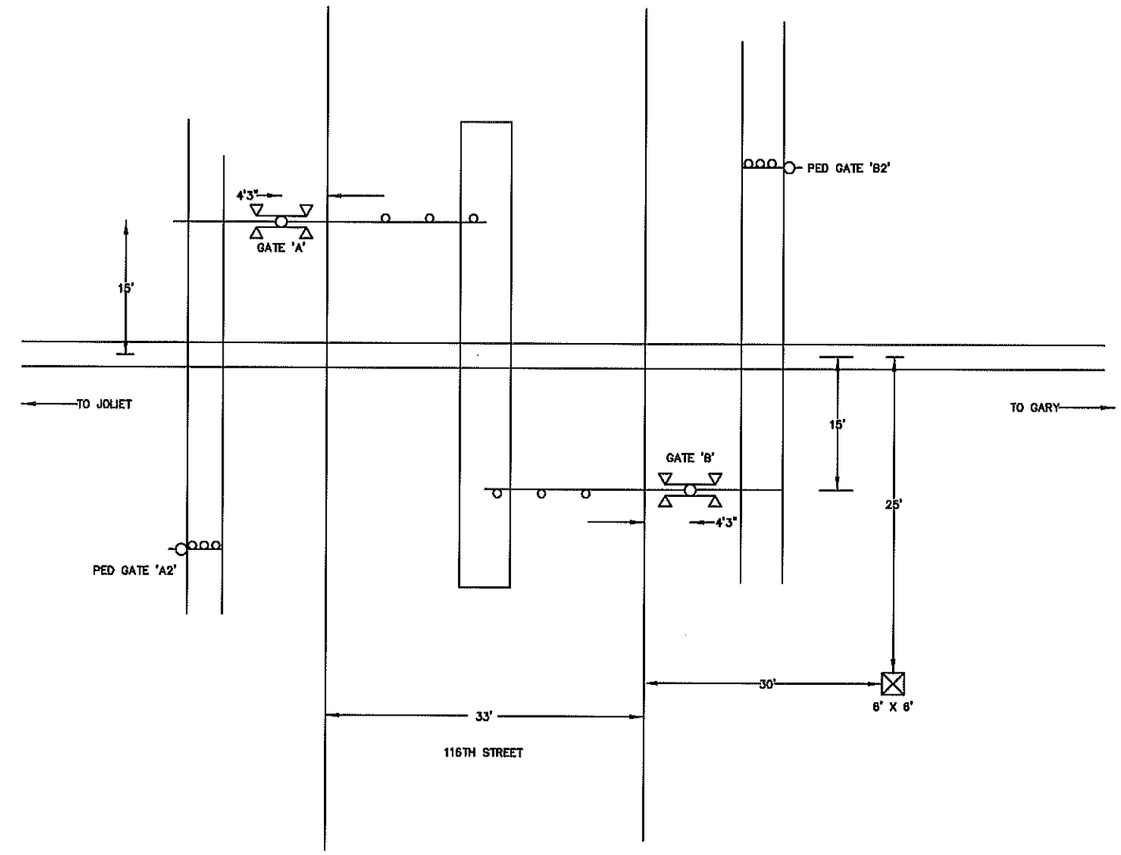

This drawing was created using CADD. All field and office changes are to be routed through Main Office in East Joliet. DO NOT make changes to this original copy without notifying the Engineer-Signals, Communications & Electrical

NO	DESCRIPTION	BY	CHK'D	DATE
8				
7				
6				
5				
4				
3				
2				
1				
	AS IN SERVICE	TWH	TWH	XX/XX

REVISIONS

ELGIN, JOLIET & EASTERN RAILWAY COMPANY

CROSSING DETAIL & CALCULATIONS
116TH STREET
FRANKFORT, ILLINOIS

ENGINEERING SERVICES
JOLIET, IL 60432
SCALE NONE

CHECKED BY TWH
IN CHARGE OF TWH

DRAWN BY TWH
DATE 12/16/08
CAD ID 260620E-001.DWG

FILE NO. 260620E | SHEET NO. 1 | CONT'D ON 2

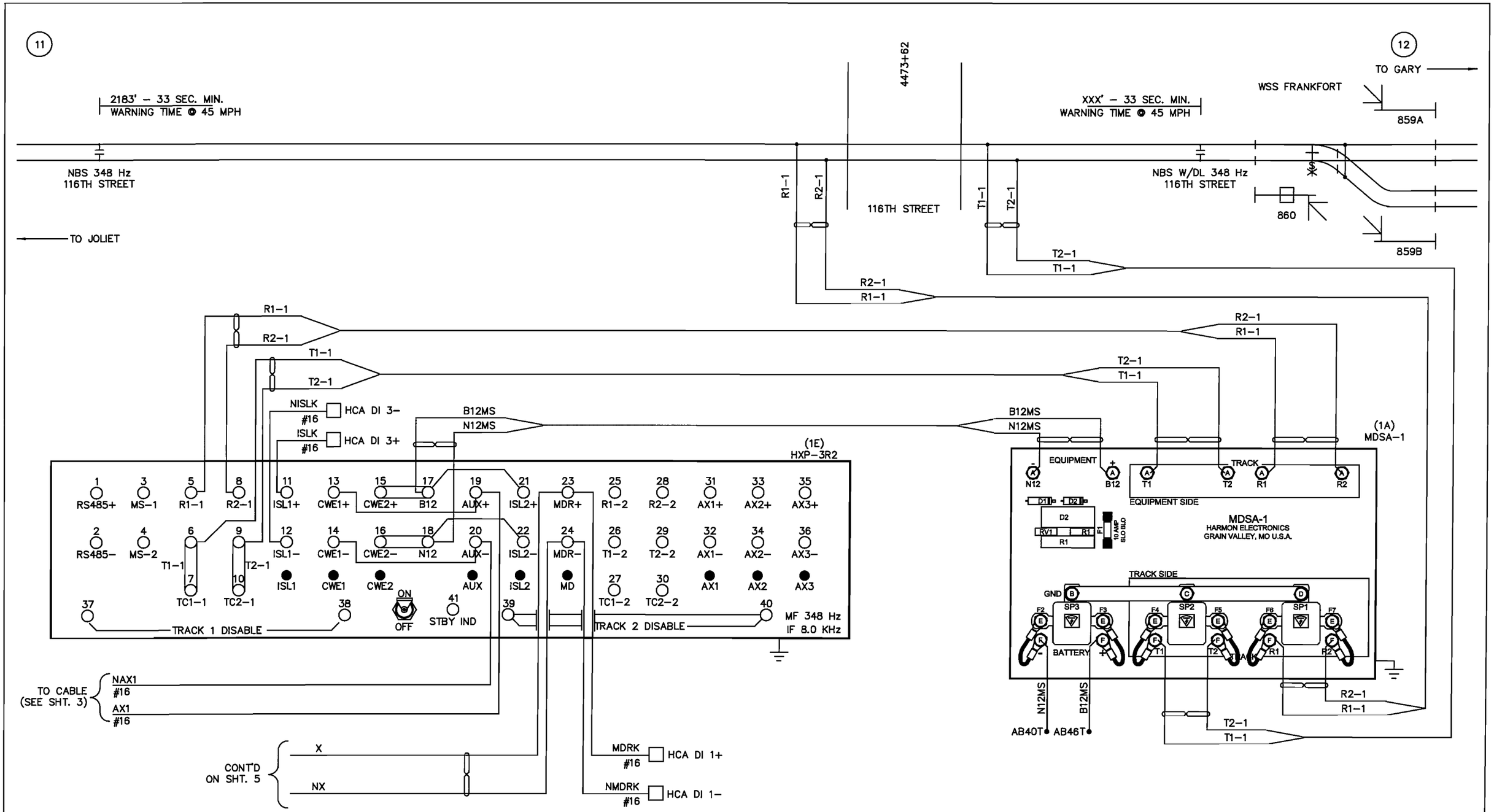

= TWIST TWO TURNS PER FOOT.

NOTES: 1. ALL WIRING THIS PAGE TO BE #10 AWG UNLESS OTHERWISE NOTED.

This drawing was created using CADD. All field and office changes are to be routed through Main Office in East Joliet IQ NOT make changes to this original copy without notifying the Engineer–Signals, Communications & Electrical

NO	DESCRIPTION	BY	CHK'D	DATE
8				
7				
6				
5				
4				
3				
2				
1				
	AS IN SERVICE	TWH	TWH	XX/03

REVISIONS

ELGIN, JOLIET & EASTERN RAILWAY COMPANY

HXP WIRING
116TH STREET
FRANKFORT, ILLINOIS

ENGINEERING SERVICES
JOLIET, IL 60432
SCALE NONE

CHECKED BY TWH
IN CHARGE OF TWH

DRAWN BY TWH
DATE 12/16/08
CAD ID 260620E-002.DWG

FILE NO. 260620E | SHEET NO. 2 | CONT'D ON 3

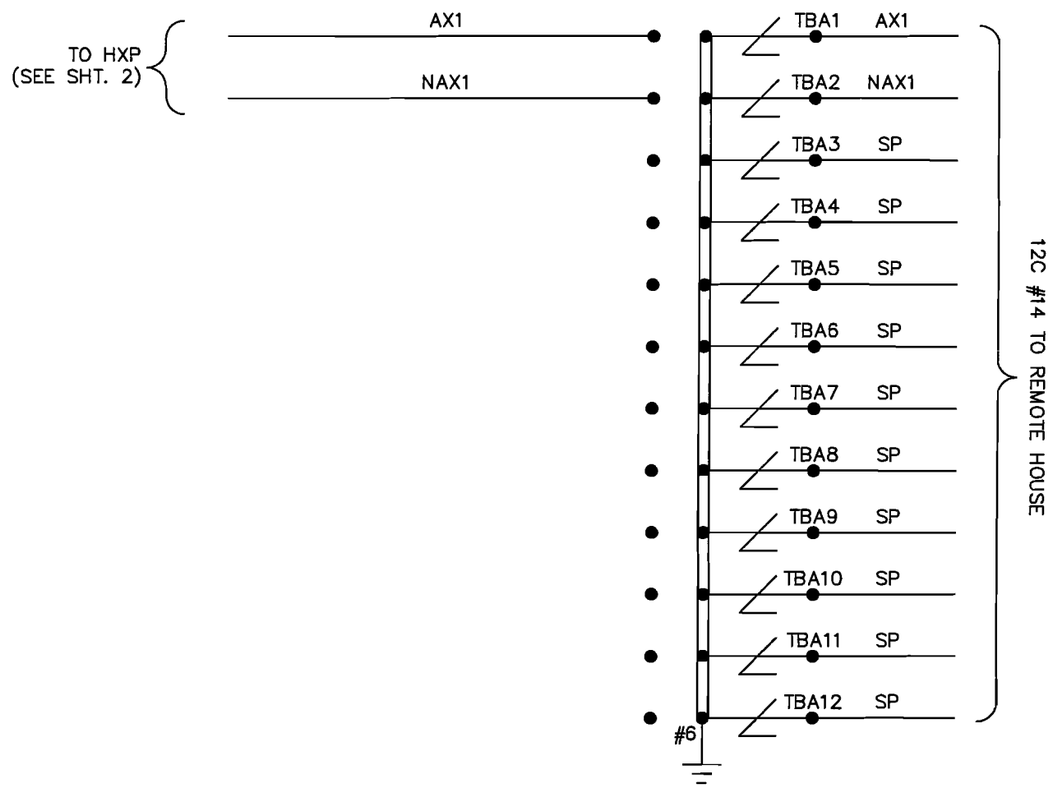

This drawing was created using CADD. All field and office changes are to be routed through Main Office in East Joliet. DO NOT make changes to this original copy without notifying the Engineer - Signals, Communications & Electrical.

NO	DESCRIPTION	BY	CHK'D	DATE
8				
7				
6				
5				
4				
3				
2				
1				
	AS IN SERVICE	TWH	TWH	XX/XX

REVISIONS

ELGIN, JOLIET & EASTERN RAILWAY COMPANY

REMOTE INTERCONNECT CIRCUITS
116th STREET
FRANKFORT, ILLINOIS

ENGINEERING SERVICES
JOLIET, IL 60432
SCALE NONE

CHECKED BY TWH
IN CHARGE OF TWH

DRAWN BY TWH
DATE 12/18/08
CAD ID 260620E-003.DWG

FILE NO. 260620E
SHEET NO. 3
CON'T'D ON 4

Grade Crossing Location Record

Cabinet Number (Option 90) XXXX

Location 116TH STREET Milepost 11.49 DOT 260 620E Date XX / XX / 09

Operating Program HPN _____ Version 42.0

System Monitor Program HPN _____ Version 20.3

Hardware Settings

Track 1 Master ☒ Slave ☐ 4 kHz ☐ 8 kHz ☒

LOS jumper 0 ☐ 1 ☒ 2 ☐ Fault jumper 0 ☒ 1 ☐

Approach configuration switch position: Normal ☒ Short ☐ Very Short ☐

Track 2 Master ☐ Slave ☐ 4 kHz ☐ 8 kHz ☐

LOS jumper 0 ☐ 1 ☐ 2 ☐ Fault jumper 0 ☐ 1 ☐

Approach configuration switch position: Normal ☐ Short ☐ Very Short ☐

Adjust Select Adjustments

No.	Adjustment	Default	Range	Track 1	Track 2
1	Approach Length	9,999	0 - 9,999	2183 feet	feet
2	Warning Time	99	23 - 99	25 seconds	seconds
3	LIA	0	-9 to +9	0 steps	steps
4	TC (1 step = 32)	395	430 - 470	X steps	steps
5	MD Restart	99%	0 - 99%	0 RX	RX

Option Adjustments

No.	Adjustment	Default	Range	Track 1	Track 2
0	RX	0	1-100		
1	TK-ENA	UP	UP or dn	UP ☒ dn ☐	UP ☐ dn ☒
2	TK FO	0	0 - 9999	348 Hz	Hz
3	CW/MD	d	C to d	C ☒ d ☐	C ☐ d ☐
4	UNI-BI	b	U - b	U ☐ b ☒	U ☐ b ☐
5	NBS-C	0	0 - 99	XXX	RX
		9,999	RX dependant	XXXX	feet
6	CWEWT	80	0 - 99	80	seconds
7	LOS	16	4 - 99	16	seconds
8	IJ-LOS	5	3 - 99	5	seconds
9	BC	frequency dependant	50 -250	XXX	
10	P-COMP	0	0 - 10	XX	degrees

HXP-3, HXP-3R, HXP-3R2

AX Adjustment Options

NOTE: NO AX DRIVE IS USED AT THIS LOCATION

	Default	Range	Option 11 - AX1	Option 12 - AX2	Option 13 - AX3
TK-ASN		1, 2, Both	1 ☐ 2 ☐ Both ☐	1 ☐ 2 ☐ Both ☐	1 ☐ 2 ☐ Both ☐
OF-TK1	0	0 - 9,999	feet	feet	feet
OF-TK2	0	0 - 9,999	feet	feet	feet
WT	99	23 - 99	seconds	seconds	seconds
MD-RST	99	0 - 99%	RX	RX	RX
CW/MD	d	C or d	C ☐ d ☐	C ☐ d ☐	C ☐ d ☐
CJ-LOS	0	3 - 99	seconds	seconds	seconds
PJ-DET	15	4 - 15	seconds	seconds	seconds
POS-ST	dn	UP or dn	UP ☐ dn ☐	UP ☐ dn ☐	UP ☐ dn ☐

No.	Adjustment	Default	Range	Track 1	Track 2
17	MDR-AX	n*	n or A	n ☒ A ☐	n ☐ A ☐
	OF-TK1	0	0 - 9,999	feet	
	OF-TK2	0	0 - 9,999		feet
	CJ-LOS	0	3 - 99	seconds	seconds
	PJ-DET	15	4 - 15	seconds	seconds
18	MD-TMR	10	10-99 (0=disable)	10 minutes	minutes
19	MIN-WT	0	23-99 (0=disable)	0 seconds	seconds
20	FS-DET	0	10-30 (0=disable)	0 minutes	minutes
21	POS-RX	0	0 - 74 (0=disable)	0 RX	RX
	POS-TM	0	0 - 99**	0 minutes	minutes
22	AR-TMR	0	0-80 (0=disable)	0 minutes	minutes
47	ATO-RX	dn	UP or dn	UP ☐ dn ☒	UP ☐ dn ☐
48	PF-ENA	UP	UP or dn	UP ☒ dn ☐	UP ☐ dn ☐

***n = not an AX drive (no options available)**

****0 = disable, 99 = continuous**

Shunt Record

West Approach		No Shunt RX	No Shunt Phase	100% Shunt RX	100% Shunt Phase	50% Shunt	50% Shunt RX	50% Shunt Phase	LIA Added ±1 to 9
Track 1	Normal								
	Standby								
Track 2	Normal								
	Standby								
East Approach									
Track 1	Normal	XX	XX	XX			XX		XX
	Standby								
Track 2	Normal								
	Standby								

This drawing was created using CADD. All field and office changes are to be routed through Main Office in East Joliet. DO NOT make changes to this original copy without notifying the Engineer-Signals, Communications & Electrical

NO	DESCRIPTION	BY	CHK'D	DATE
8				
7				
6				
5				
4				
3				
2				
1				
	AS IN SERVICE	TWH	TWH	XX/XX

REVISIONS

ELGIN, JOLIET & EASTERN RAILWAY COMPANY

HXP SETUP SHEET
116TH STREET
FRANKFORT, ILLINOIS

ENGINEERING SERVICES JOLIET, IL 60432 SCALE NONE

CHECKED BY TWH IN CHARGE OF TWH

DRAWN BY TWH DATE 6/8/07 CAD ID 260620E-004.DWG

FILE NO. 260620E SHEET NO. 4 CONT'D ON 5

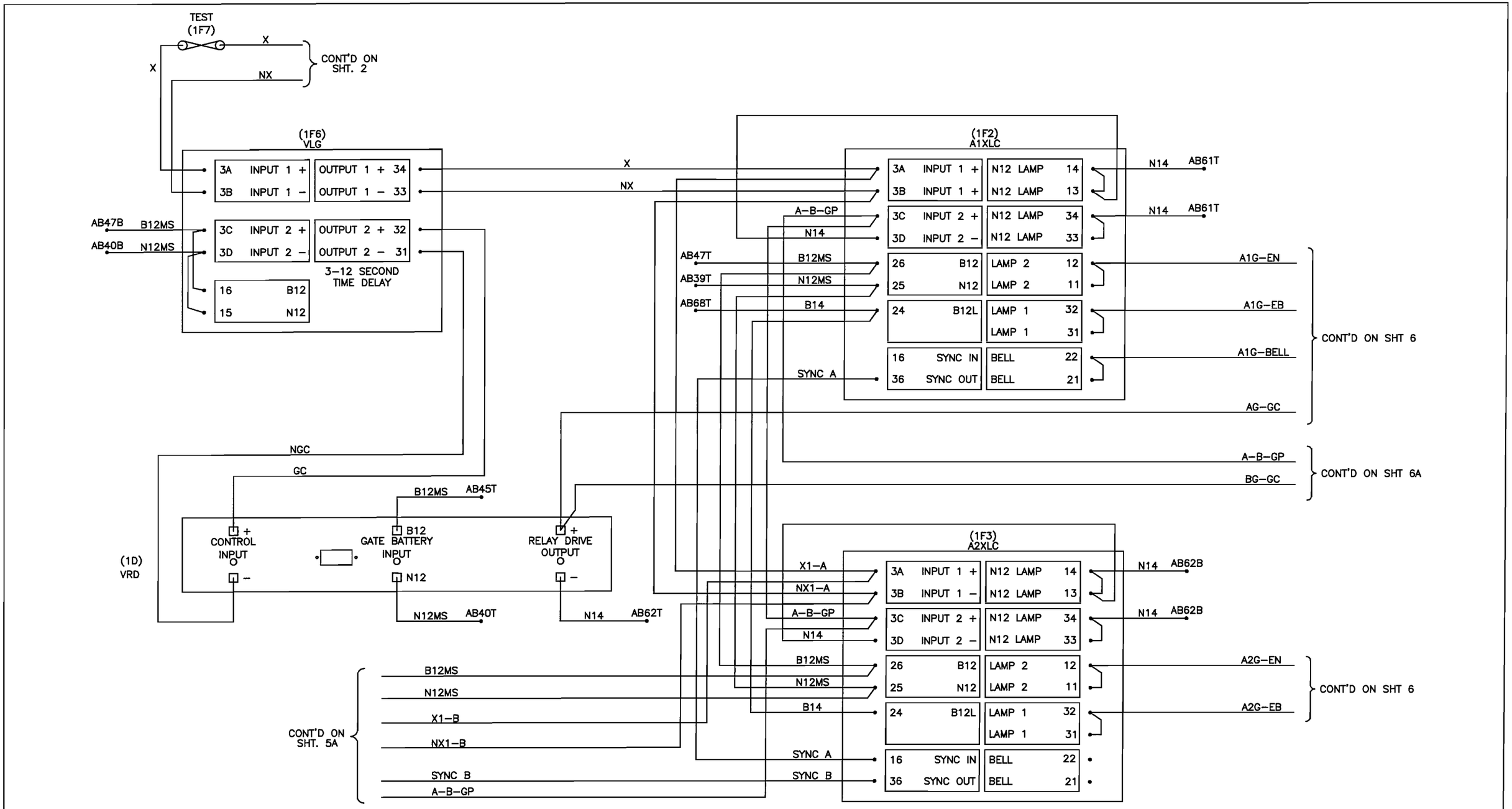

NOTES:
1. ALL WIRING THIS SHEET TO BE #10 UNLESS OTHERWISE SHOWN.
2. BEFORE PLACING IN SERVICE, VERIFY VLG IS SET FOR 3 SECOND DELAY

This drawing was created using CADD. All field and office changes are to be routed through Main Office in East Joliet. DO NOT make changes to this original copy without notifying the Engineer-Signals, Communications & Electrical

NO	DESCRIPTION	BY	CHK'D	DATE
8				
7				
6				
5				
4				
3				
2				
1				
	AS IN SERVICE	TWH	TWH	XX/XX

REVISIONS

ELGIN, JOLIET & EASTERN RAILWAY COMPANY

LOGIC GATE & LAMP CONTROL WIRING
116TH STREET
FRANKFORT, ILLINOIS

ENGINEERING SERVICES
JOLIET, IL 60432
SCALE NONE

CHECKED BY TWH
IN CHARGE OF TWH

DRAWN BY TWH
DATE 12/16/08
CAD ID 260620E-005.DWG

FILE NO. 260620E
SHEET NO. 5
CONT'D ON 5A

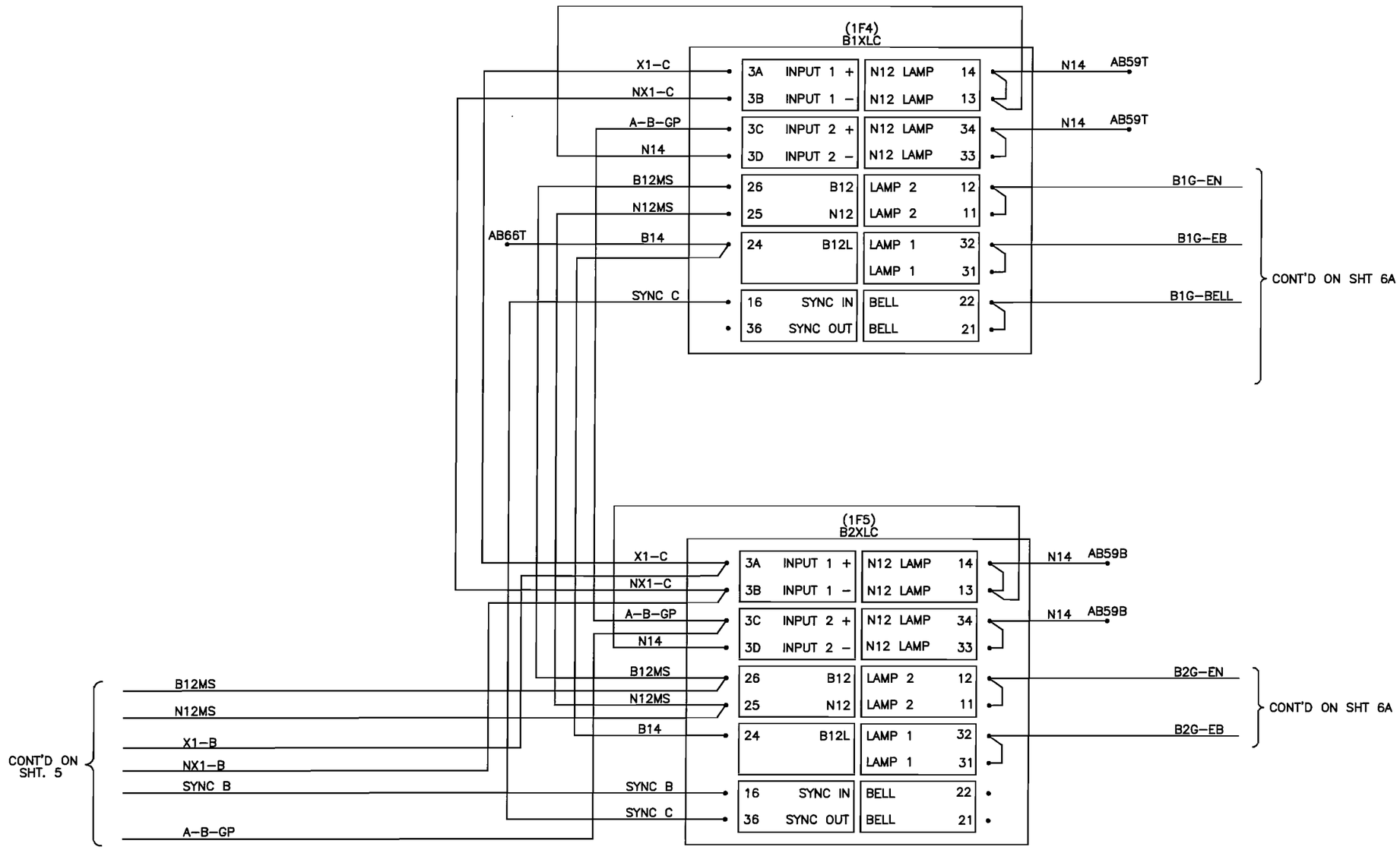

NOTES:
1. ALL WIRING THIS SHEET TO BE #10 UNLESS OTHERWISE SHOWN.
2. BEFORE PLACING IN SERVICE, VERIFY VLG IS SET FOR 3 SECOND DELAY

This drawing was created using CADD. All field and office changes are to be routed through Main Office in East Joliet. DO NOT make changes to this original copy without notifying the Engineer-Signals, Communications & Electrical

NO	DESCRIPTION	BY	CHK'D	DATE
8				
7				
6				
5				
4				
3				
2				
1				
	AS IN SERVICE	TWH	TWH	XX/XX

REVISIONS

ELGIN, JOLIET & EASTERN RAILWAY COMPANY

LOGIC GATE & LAMP CONTROL WIRING B
116TH STREET
FRANKFORT, ILLINOIS

ENGINEERING SERVICES
JOLIET, IL 60432
SCALE NONE

CHECKED BY TWH
IN CHARGE OF TWH

DRAWN BY TWH
DATE 12/16/09
CAD ID 260620E-005.DWG

FILE NO. 260620E | SHEET NO. 5A | CONT'D ON 6

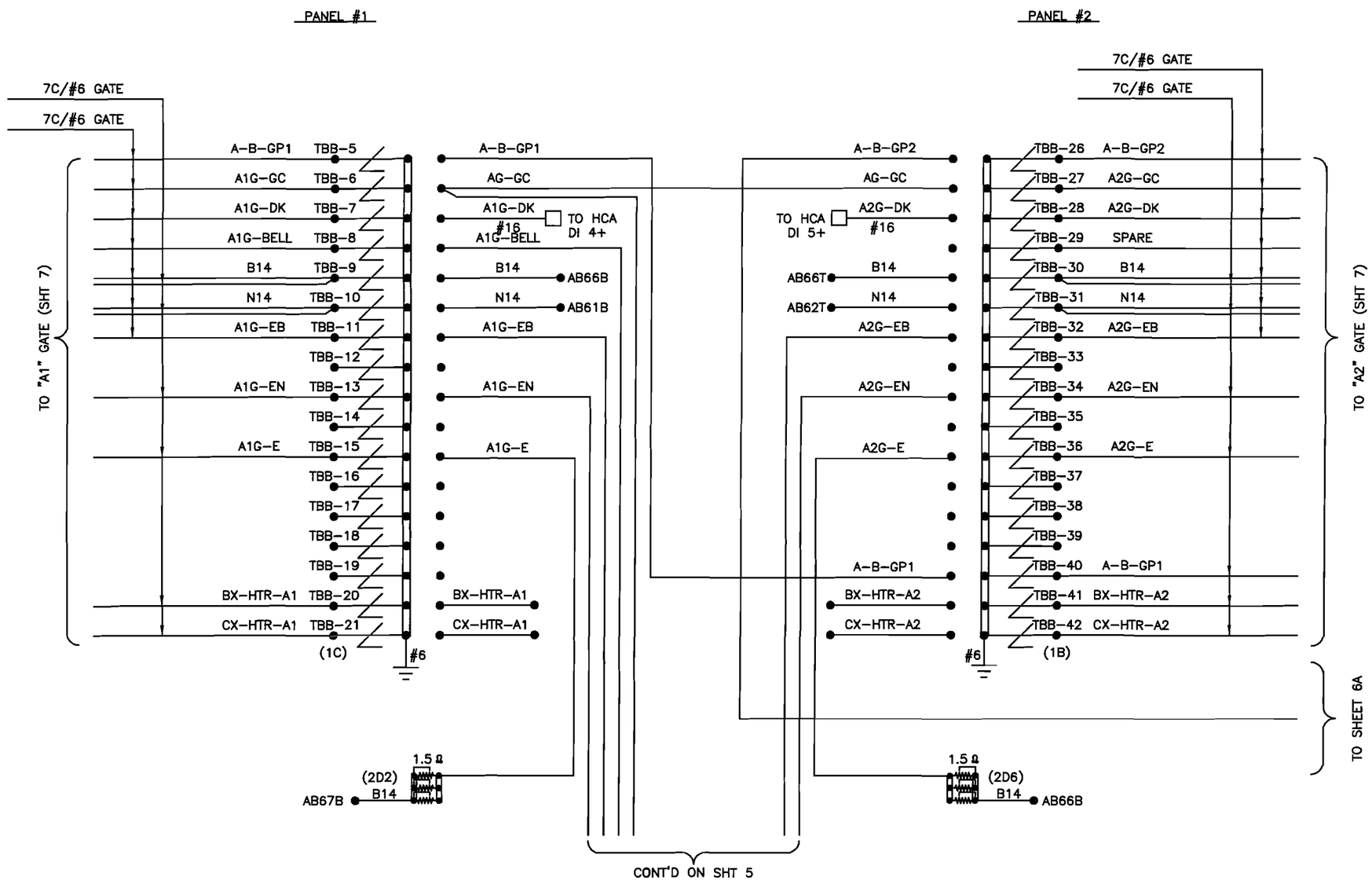

NOTES:

1. ALL WIRING THIS SHEET TO BE #10 UNLESS OTHERWISE SHOWN.
2. ADJUST ALL RESISTORS EVENLY.

This drawing was created using CADD. All field and office changes are to be routed through Main Office in East Joliet. DO NOT make changes to this original copy without notifying the Engineer-Signals, Communications & Electrical

NO	DESCRIPTION	BY	CHK'D	DATE
8				
7				
6				
5				
4				
3				
2				
1				
	AS IN SERVICE	TVH	TVH	XX/XX

REVISIONS

ELGIN, JOLIET & EASTERN RAILWAY COMPANY

CABLE & ARRESTOR PANEL WIRING A
116TH STREET
FRANKFORT, ILLINOIS

ENGINEERING SERVICES
JOLIET, IL 60432
SCALE NONE

CHECKED BY TVH
IN CHARGE OF TVH

DRAWN BY TVH
DATE 12/16/09
CAD ID 260620E-006.DWG

FILE NO. 260620E | SHEET NO. 6 | CONT'D ON 6A

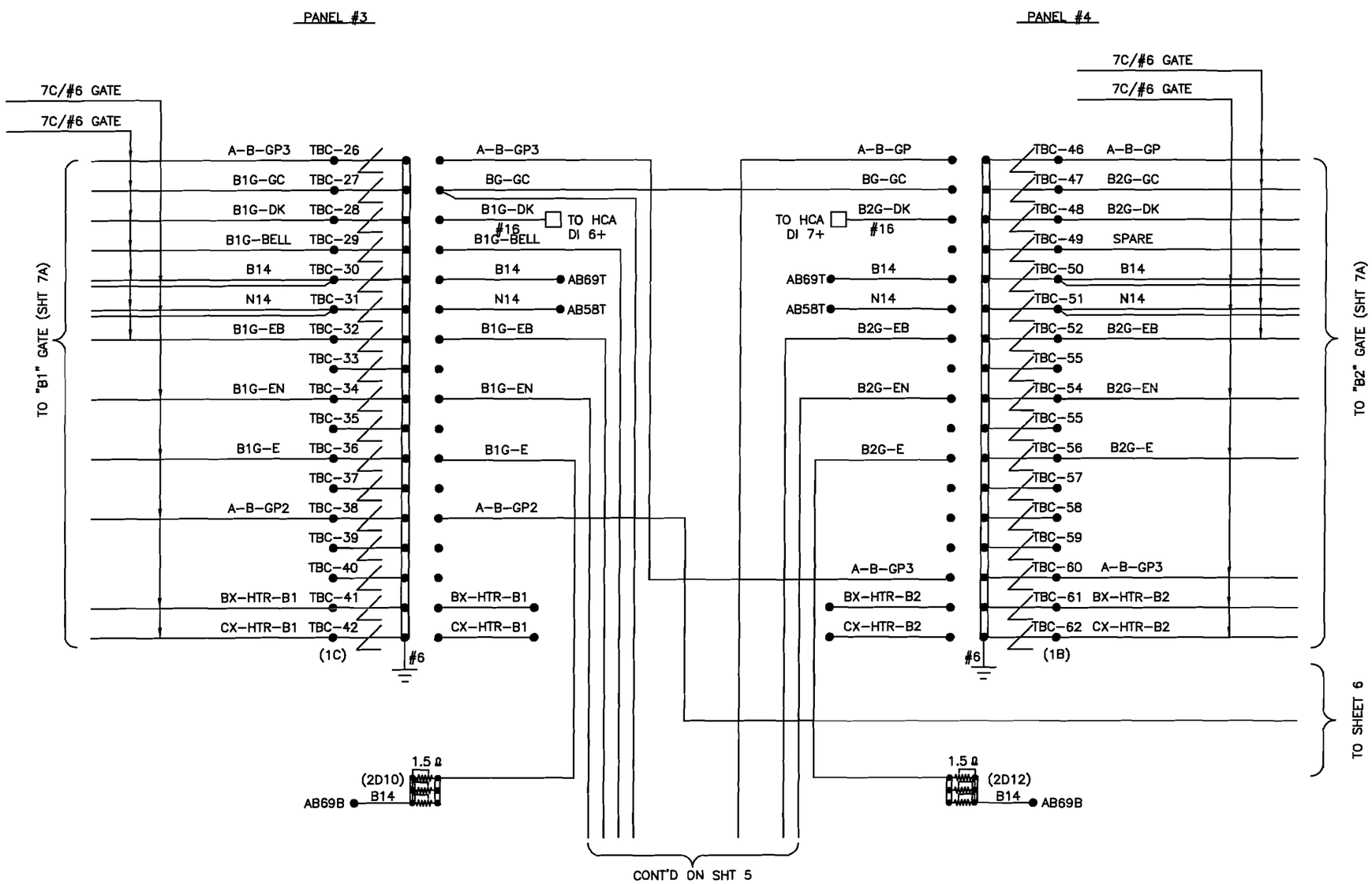

NOTES:

1. ALL WIRING THIS SHEET TO BE #10 UNLESS OTHERWISE SHOWN.
2. ADJUST ALL RESISTORS EVENLY.

This drawing was created using CADD. All field and office changes are to be routed through Main Office in East Joliet. DO NOT make changes to this original copy without notifying the Engineer-Signals, Communications & Electrical.

NO	DESCRIPTION	BY	CHK'D	DATE
8				
7				
6				
5				
4				
3				
2				
1				
	AS IN SERVICE	TWH	TWH	XX/XX

REVISIONS

ELGIN, JOLIET & EASTERN RAILWAY COMPANY

CABLE & ARRESTOR PANEL WIRING B
116TH STREET
FRANKFORT, ILLINOIS

ENGINEERING SERVICES
JOLIET, IL 60432
SCALE NONE

CHECKED BY TWH
IN CHARGE OF TWH

DRAWN BY TWH
DATE 12/16/08
CAD ID 260620E-006.DWG

FILE NO. 260620E | SHEET NO. 6A | CONT'D ON 7

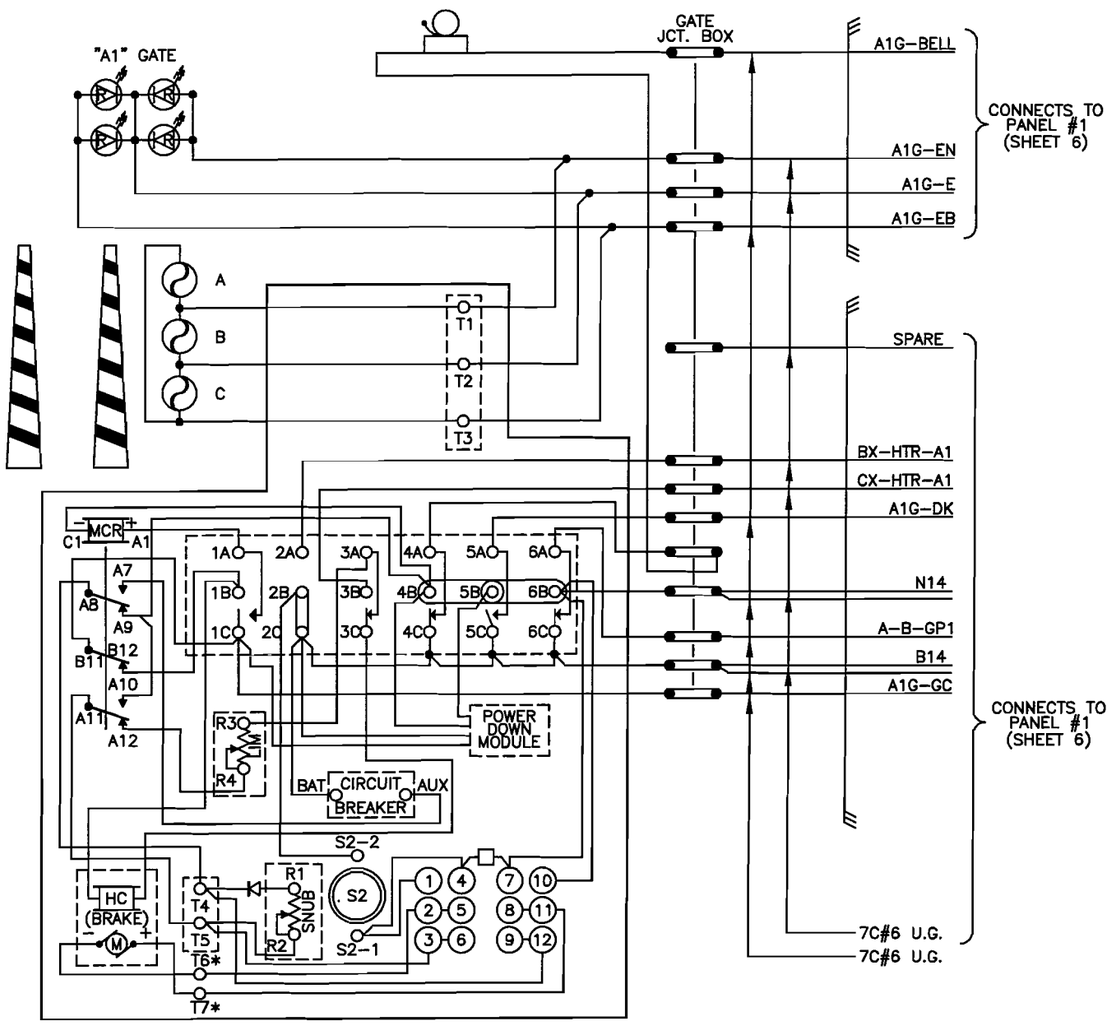

US & S MODEL 95 GATE MECHANISM

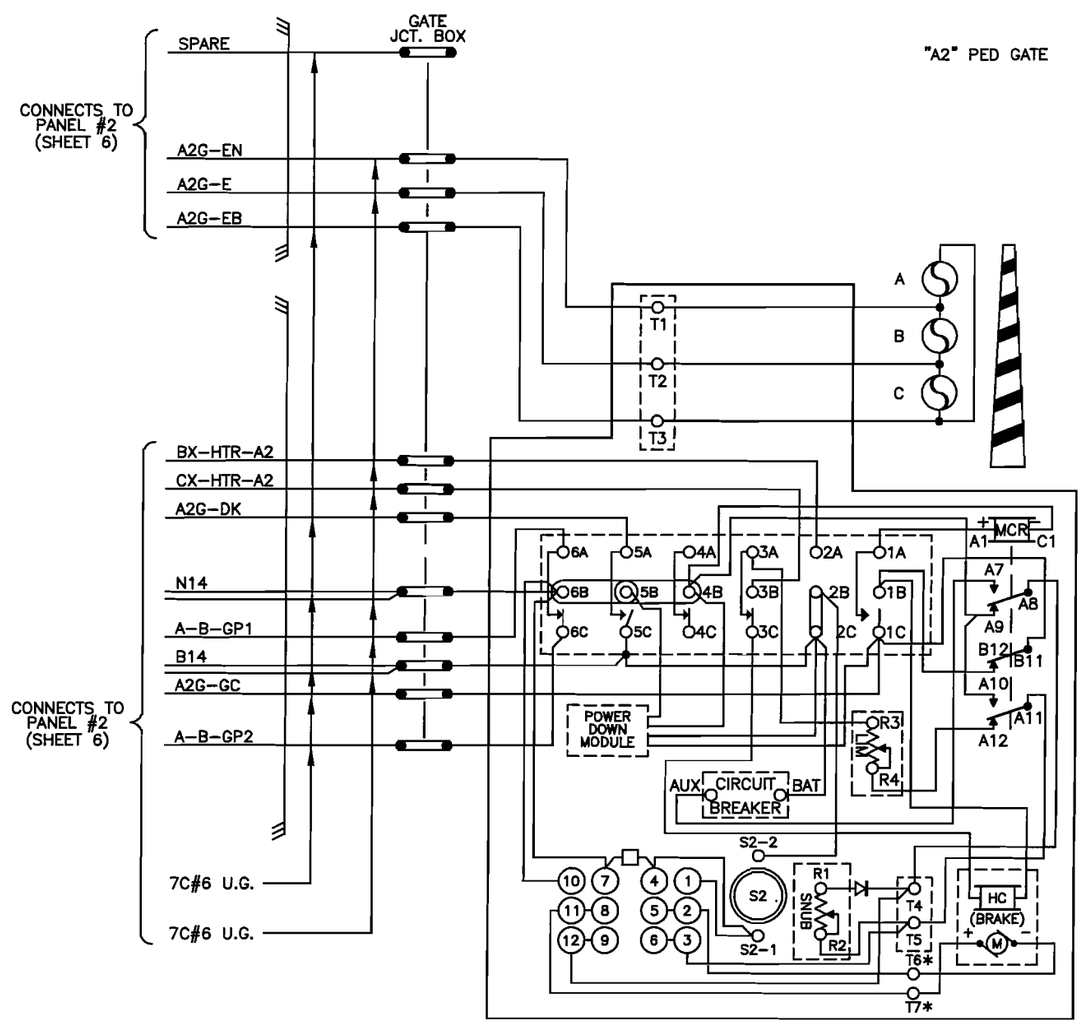

US & S MODEL 95 GATE MECHANISM

(SHOWN WITH MECHANISM IN VERTICAL POS.)

CONTACT	CLOSED	FUNCTION
1	0°–89°	MOTOR UP
2		VACANT SLOT
3	45°–90°	MOTOR DN
4	5°–90°	BELL
5	0° – 5°	GATE DN IND
6	83°–90°	FLASH'G LIGHT

NOTES:

1. JUMPERS MUST BE ADDED TO EACH GATE AS SHOWN.
2. GROUND WIRE OF CABLE SHALL BE GROUNDED AT EACH GATE.
3. ALL LIGHT WIRES THIS PAGE ARE TO BE #10 AWG.
4. * = APPLY ONLY TO RETROFIT KIT
5. GATE 'A1' AND 'A2' B14 & N14 DOUBLED UP TO PREVENT VOLTAGE DROP

THE J

This drawing was created using CADD. All field and office changes are to be routed through Main Office in East Joliet. DO NOT make changes to this original copy without notifying the Engineer-Signals, Communications & Electrical

NO	DESCRIPTION	BY	CHK'D	DATE
8				
7				
6				
5				
4				
3				
2				
1				
	AS IN SERVICE	TWH	TWH	XX/XX

REVISIONS

ELGIN, JOLIET & EASTERN RAILWAY COMPANY

CROSSING GATE WIRING A
116TH STREET
FRANKFORT, ILLINOIS

ENGINEERING SERVICES
JOLIET, IL 60432
SCALE NONE

CHECKED BY TWH
IN CHARGE OF TWH

DRAWN BY TWH
DATE 12/16/08
CAD ID 260620E-007.DWG

FILE NO. 260620E

SHEET NO. 7

CONT'D ON 7A

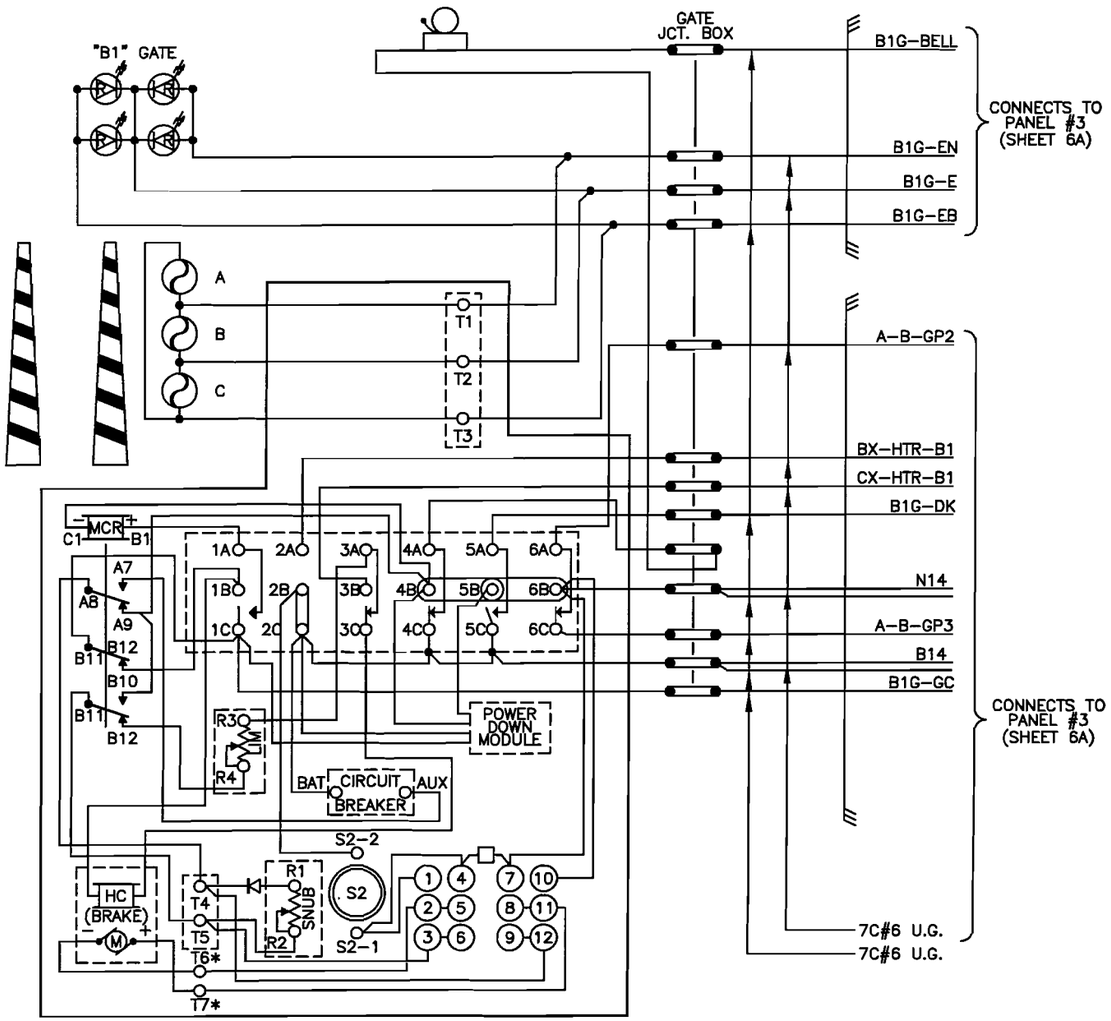

US & S MODEL 95 GATE MECHANISM

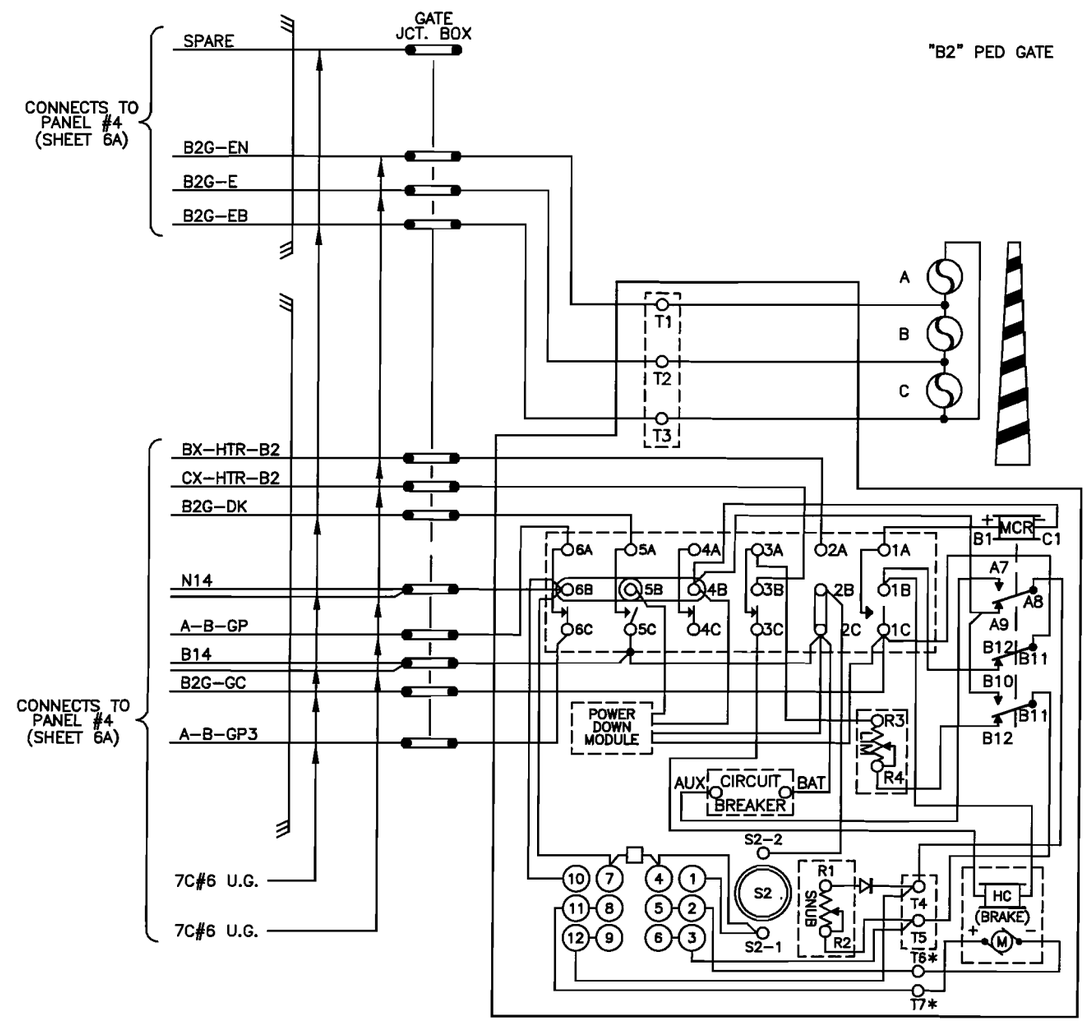

US & S MODEL 95 GATE MECHANISM

(SHOWN WITH MECHANISM IN VERTICAL POS.)

CONTACT	CLOSED	FUNCTION
1	0°–89°	MOTOR UP
2		VACANT SLOT
3	45°–90°	MOTOR DN
4	5°–90°	BELL
5	0° – 5°	GATE DN IND
6	83°–90°	FLASH'G LIGHT

NOTES:

1. JUMPERS MUST BE ADDED TO EACH GATE AS SHOWN.
2. GROUND WIRE OF CABLE SHALL BE GROUNDED AT EACH GATE.
3. ALL LIGHT WIRES THIS PAGE ARE TO BE #10 AWG.
4. * = APPLY ONLY TO RETROFIT KIT
5. GATE 'B' B14 & N14 DOUBLED UP TO PREVENT VOLTAGE DROP

THE J

This drawing was created using CADD. All field and office changes are to be routed through Main Office in East Joliet. DO NOT make changes to this original copy without notifying the Engineer-Signals, Communications & Electrical

NO	DESCRIPTION	BY	CHK'D	DATE
8				
7				
6				
5				
4				
3				
2				
1				
	AS IN SERVICE	TWH	TWH	XX/XX

REVISIONS

ELGIN, JOLIET & EASTERN RAILWAY COMPANY

CROSSING GATE WIRING B
116TH STREET
FRANKFORT, ILLINOIS

ENGINEERING SERVICES
JOLIET, IL 60432
SCALE NONE

CHECKED BY TWH
IN CHARGE OF TWH

DRAWN BY TWH
DATE 12/16/08
CAD ID 260620E-007.DWG

FILE NO. 260620E | SHEET NO. 7A | CONT'D ON 8

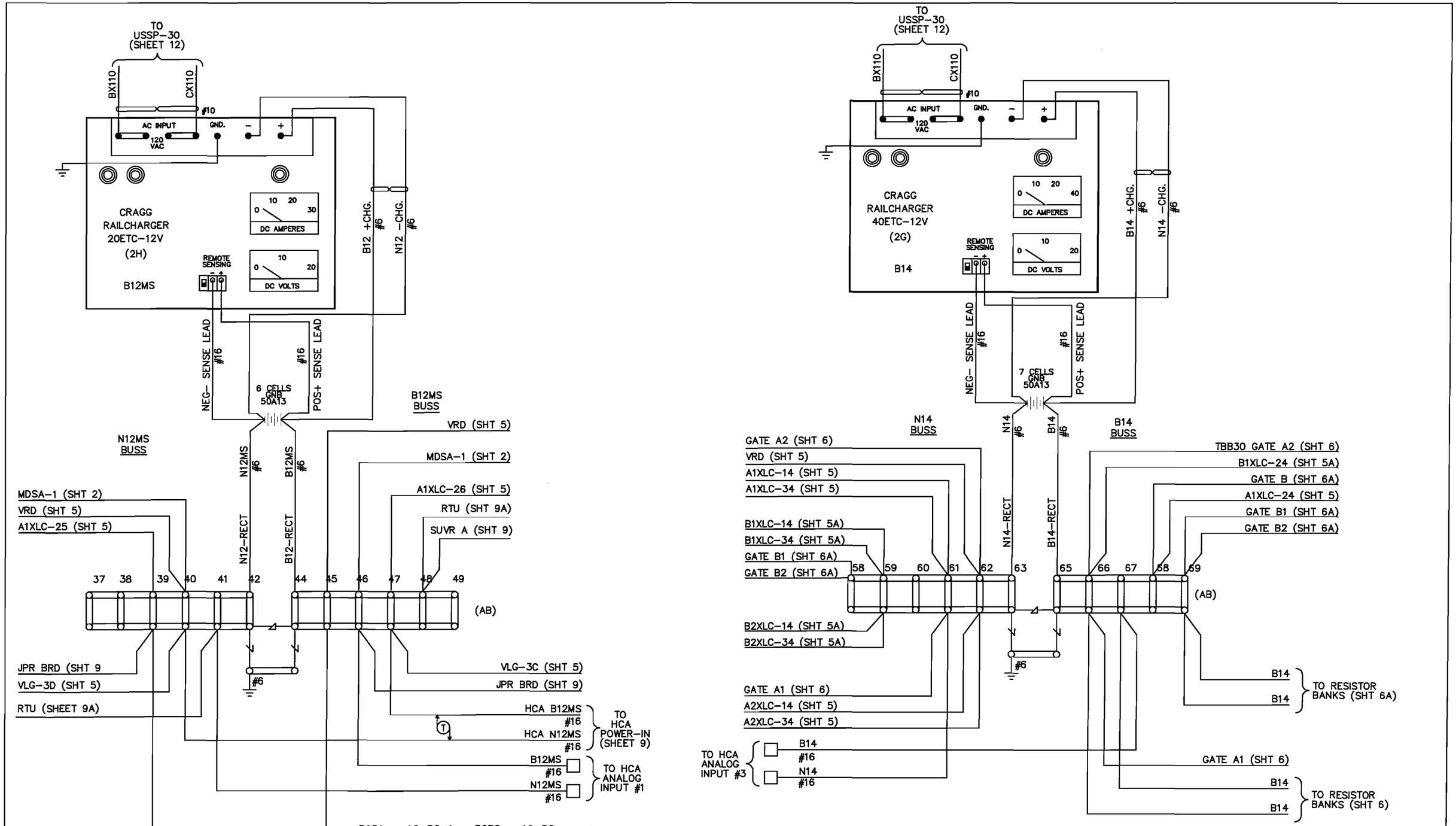

LEGEND:

(T) = TWIST TWO TURNS PER FOOT.

NOTE: ALL WIRING THIS SHEET TO BE #10AWG UNLESS OTHERWISE NOTED.

This drawing was created using CADD. All field and office changes are to be routed through Main Office in East Joliet. DO NOT make changes to this original copy without notifying the Engineer-Signals, Communications & Electrical.

NO	DESCRIPTION	BY	CHK'D	DATE
8				
7				
6				
5				
4				
3				
2				
1				
	AS IN SERVICE	TWH	TWH	XX/XX

REVISIONS

ELGIN, JOLIET & EASTERN RAILWAY COMPANY

BATTERY BUS AND RECTIFIER WIRING
116TH STREET
FRANKFORT, ILLINOIS

ENGINEERING SERVICES
JOLIET, IL 60432
SCALE NONE

CHECKED BY TWH
IN CHARGE OF TWH

DRAWN BY TWH
DATE 12/16/08
CAD ID 260620E-008.DWG

FILE NO. 260620E

SHEET NO. 8

CONT'D ON 9

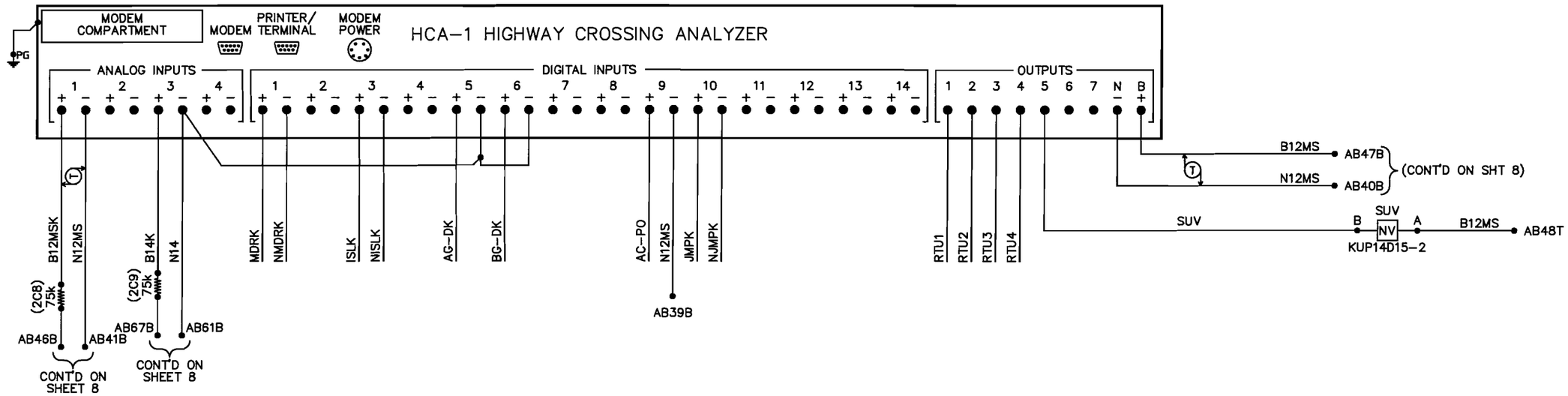

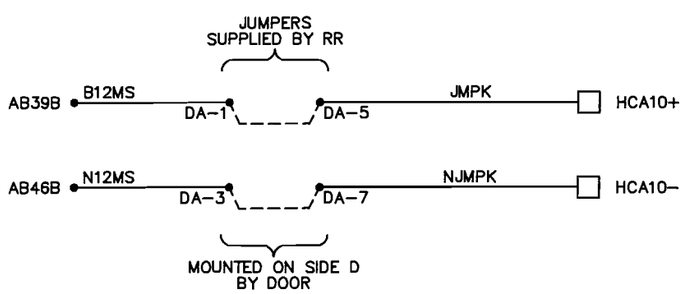

NOTES:

1. ALL WIRING ON THIS SHEET TO BE #16 UNLESS OTHERWISE NOTED.

This drawing was created using CADD. All field and office changes are to be routed through Main Office in East Joliet. DO NOT make changes to this original copy without notifying the Engineer–Signals, Communications & Electrical.

NO	DESCRIPTION	BY	CHK'D	DATE
	AS IN SERVICE	TWH	TWH	XX/XX

REVISIONS

ELGIN, JOLIET & EASTERN RAILWAY COMPANY

HCA WIRING
116TH STREET
FRANKFORT, ILLINOIS

ENGINEERING SERVICES
JOLIET, IL 60432
SCALE NONE

CHECKED BY TWH
IN CHARGE OF TWH

DRAWN BY TWH
DATE 12/16/08
CAD ID 260620E-089.DWG

FILE NO. 260620E | SHEET NO. 9 | CONT'D ON 9A

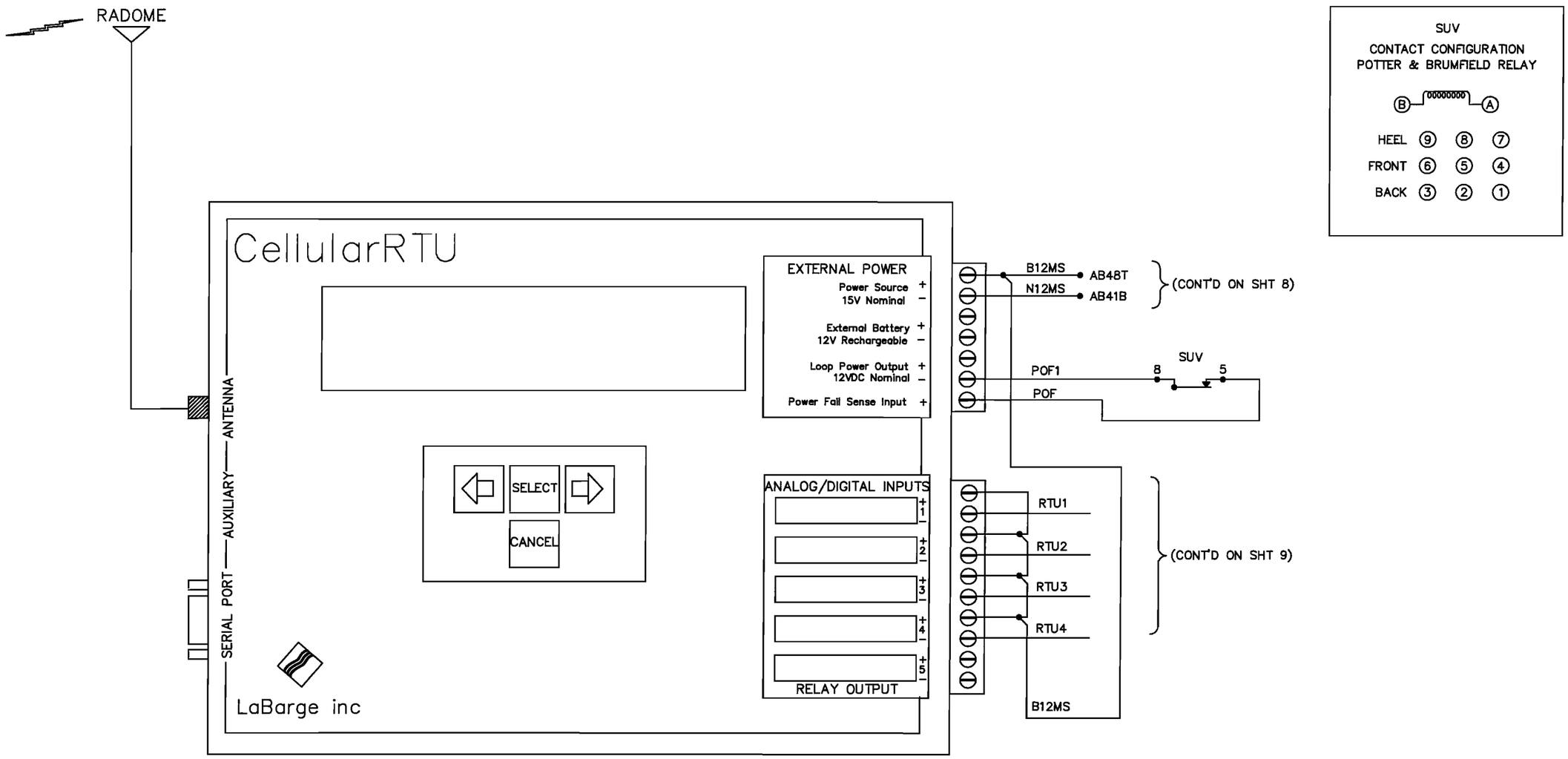

This drawing was created using CADD. All field and office changes are to be routed through Main Office in East Joliet. DO NOT make changes to this original copy without notifying the Engineer-Signals, Communications & Electrical.

NO	DESCRIPTION	BY	CHK'D	DATE
8				
7				
6				
5				
4				
3				
2				
1				
	AS IN SERVICE	TWH	TWH	XX/XX

REVISIONS

ELGIN, JOLIET & EASTERN RAILWAY COMPANY

RTU WIRING
116TH STREET
FRANKFORT, ILLINOIS

ENGINEERING SERVICES
JOLIET, IL 60432
SCALE NONE

CHECKED BY TWH
IN CHARGE OF TWH

DRAWN BY TWH
DATE 12/16/09
CAD ID [illegible]

FILE NO. 260620E
SHEET NO. 9A
CONT'D ON 10

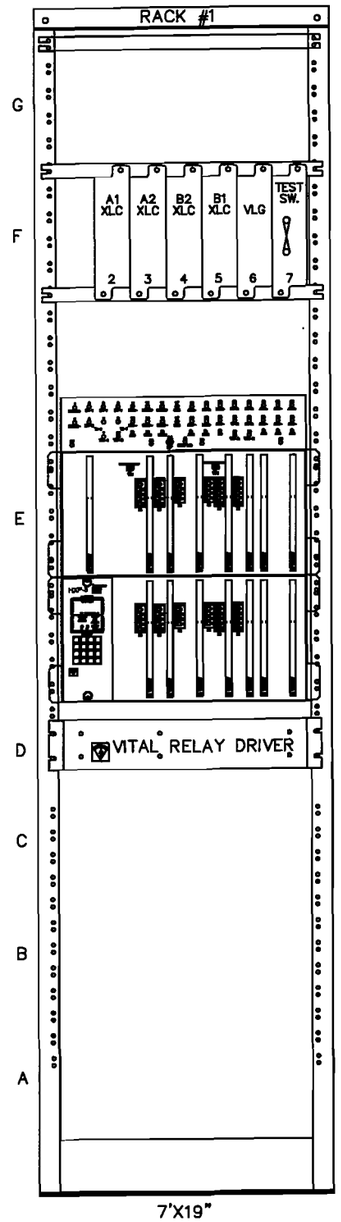

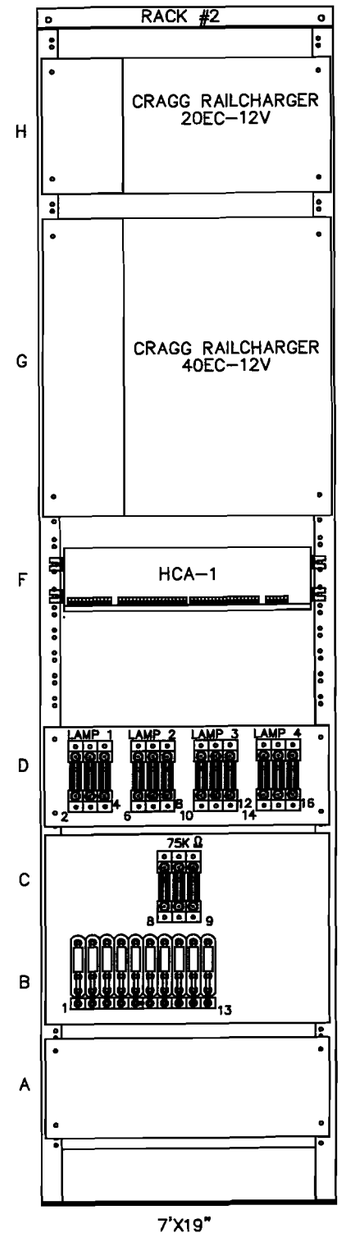

TLM MODULE SETTINGS

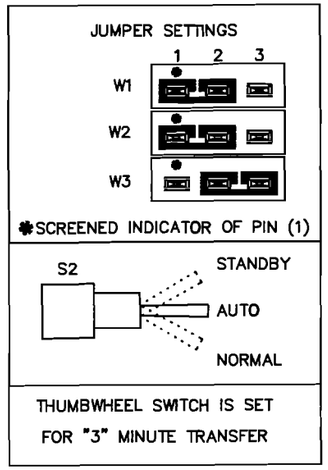

HXP-3R2
FOR WIRING PLAN – SEE SHT 2

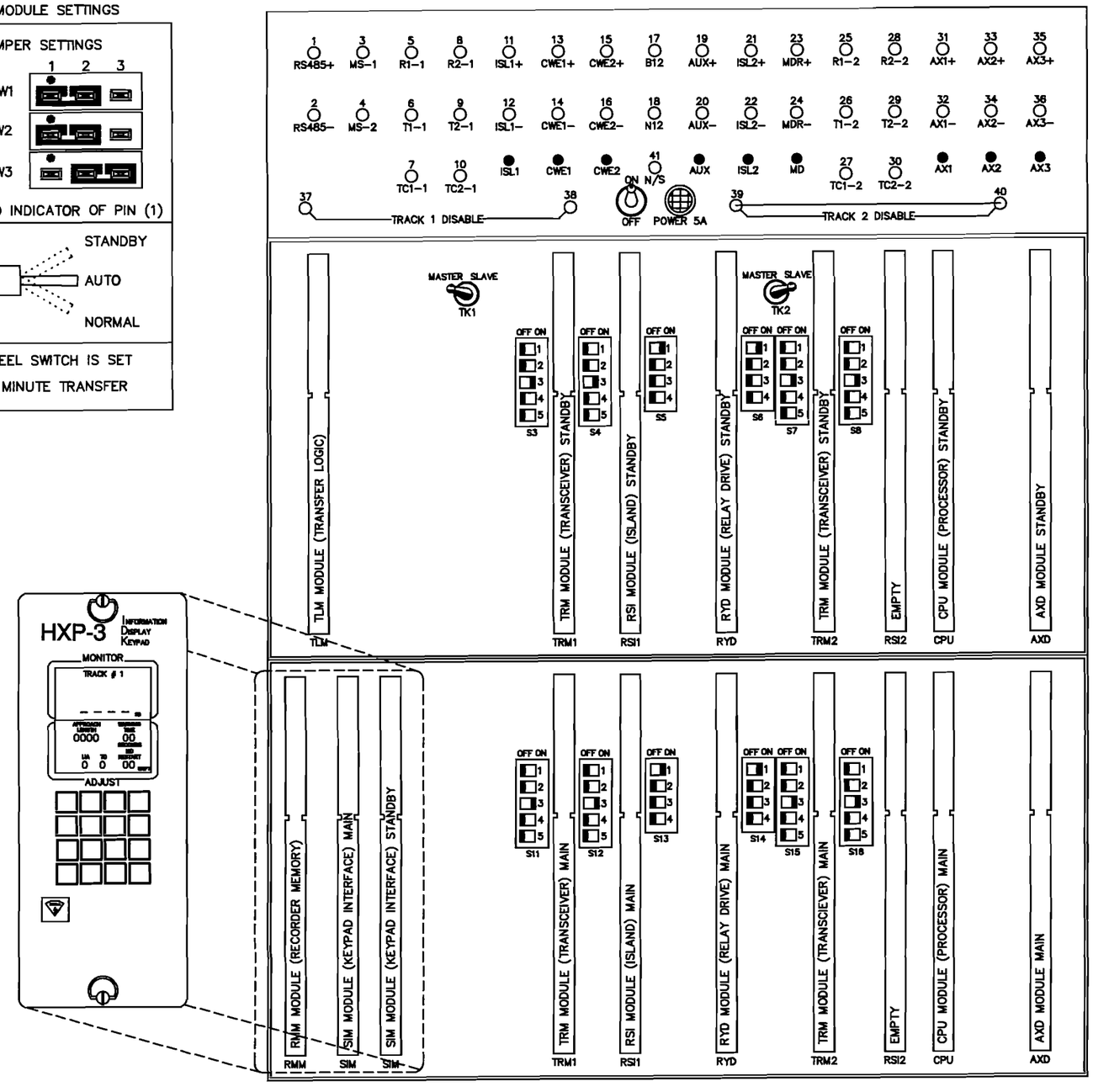

This drawing was created using CADD. All field and office changes are to be routed through Main Office in East Joliet. DO NOT make changes to this original copy without notifying the Engineer-Signals, Communications & Electrical.

NO	DESCRIPTION	BY	CHK'D	DATE
8				
7				
6				
5				
4				
3				
2				
1				
	AS IN SERVICE	TWH	TWH	XX/XX

REVISIONS

ELGIN, JOLIET & EASTERN RAILWAY COMPANY

EQUIPMENT RACK LAYOUT
116TH STREET
FRANKFORT, ILLINOIS

ENGINEERING SERVICES
JOLIET, IL 60432
SCALE NONE

CHECKED BY TWH
IN CHARGE OF TWH

DRAWN BY TWH
DATE 12/16/08
CAD ID 260620E-010.DWG

FILE NO. 260620E

SHEET NO. 10

CONT'D ON 11

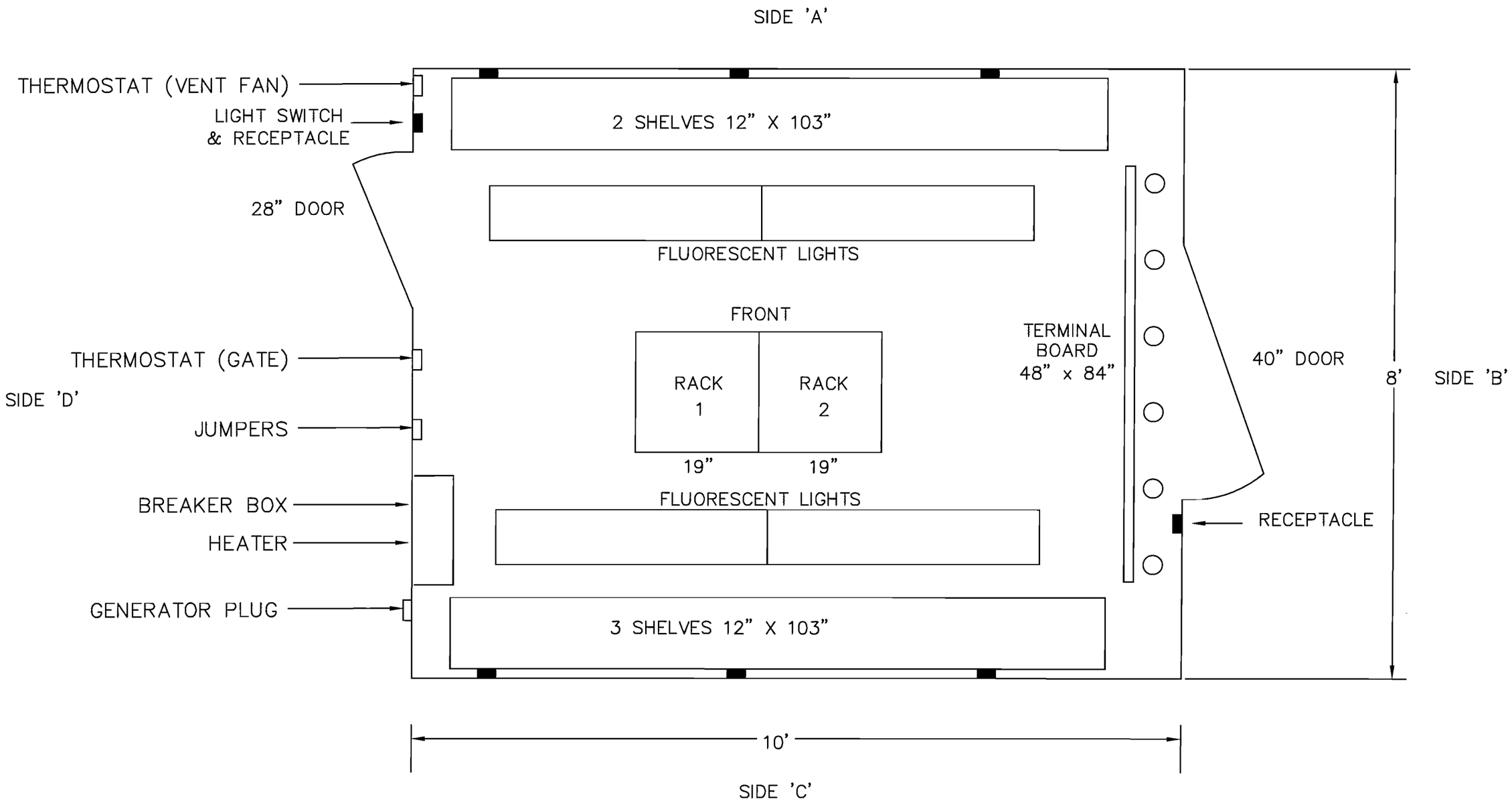

This drawing was created using CADD. All field and office changes are to be routed through Main Office in East Joliet DO NOT make changes to this original copy without notifying the Engineer-Signals, Communications & Electrical

NO	DESCRIPTION	BY	CHK'D	DATE
8				
7				
6				
5				
4				
3				
2				
1				
	AS IN SRVICE	TWH	TWH	XX/XX

REVISIONS

ELGIN, JOLIET & EASTERN RAILWAY COMPANY

HOUSE LAYOUT
116TH STREET
FRANKFORT, ILLINOIS

ENGINEERING SERVICES
JOLIET, IL 60432
SCALE NONE

CHECKED BY TWH
IN CHARGE OF TWH

DRAWN BY TWH
DATE 12/16/08
CAD D:\260620E-011.DWG

FILE NO. 260620E

SHEET NO. 11

CONT'D ON 12

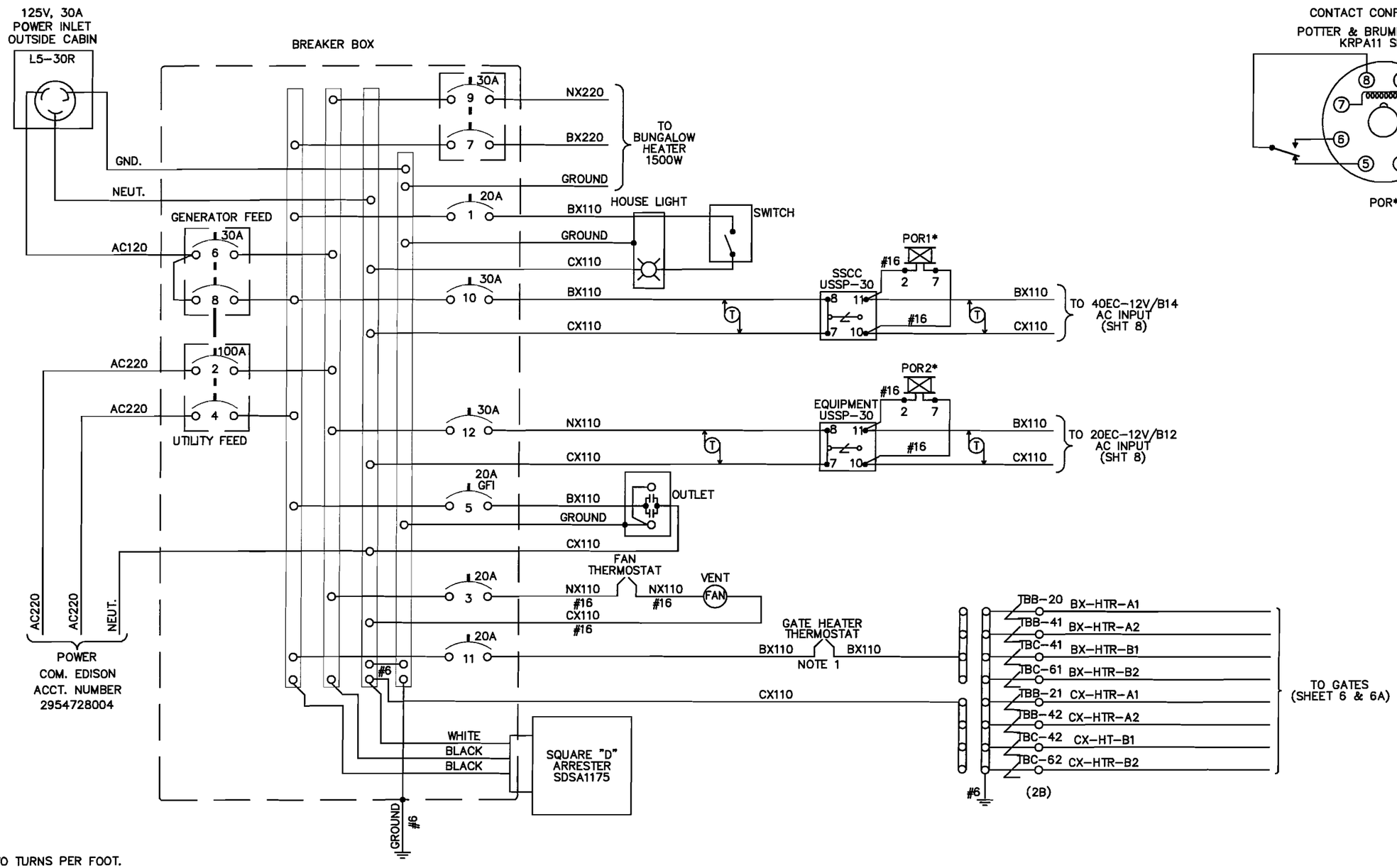

LEGEND:

Ⓣ = TWIST TWO TURNS PER FOOT.

NOTES:

1.) REMOTE TEMPERATURE SENSING BULB TO BE MOUNTED OUTSIDE HOUSE.

2.) * = 120VAC NON-VITAL AC RELAY KRP-11AY-120VAC, 5A. 8 PIN SOCKET. SOCKETS TO BE #27E122, 8 PIN OCTAL OR EQUIVALENT.

3.) ALL WIRING THIS SHEET TO BE #10 AWG. UNLESS OTHERWISE NOTED.

4.) UTILITY FEED AND GENERATOR FEED BREAKERS ARE MECHANICALLY INTERLOCKED TO PROVIDE PROPER OPERATION.

THE J

This drawing was created using CADD. All field and office changes are to be routed through Main Office in East Joliet. DO NOT make changes to this original copy without notifying the Engineer-Signals, Communications & Electrical.

NO	DESCRIPTION	BY	CHK'D	DATE
8				
7				
6				
5				
4				
3				
2				
1				
	AS IN SERVICE	TWH	TWH	XX/XX

REVISIONS

ELGIN, JOLIET & EASTERN RAILWAY COMPANY

AC POWER DISTRIBUTION
116TH STREET
FRANKFORT, ILLINOIS

ENGINEERING SERVICES
JOLIET, IL 60432
SCALE NONE

CHECKED BY TWH
IN CHARGE OF TWH

DRAWN BY TWH
DATE 12/18/08
CAD ID 260620E-012.DWG

FILE NO. 260620E | SHEET NO. 12 | CONT'D ON 13

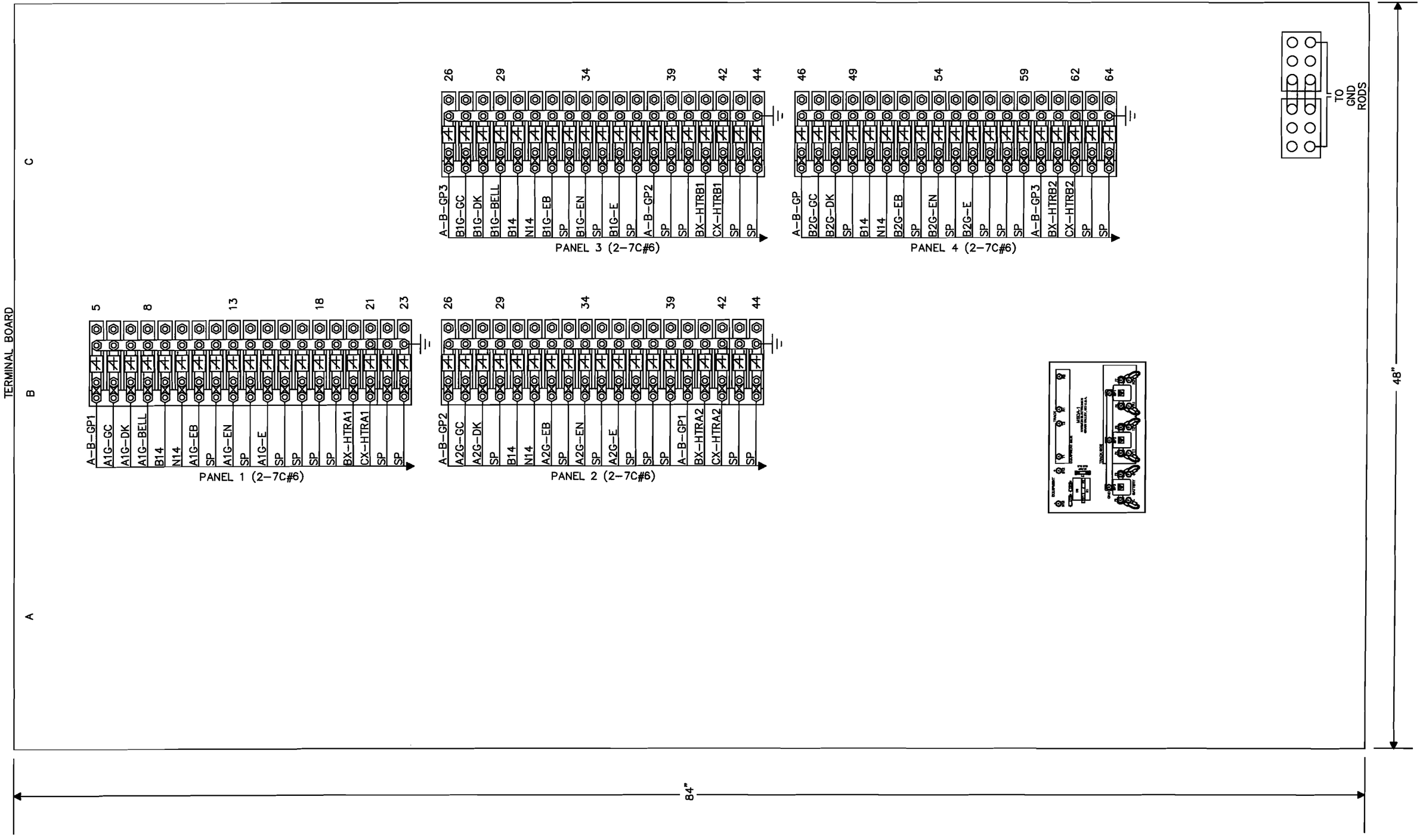

This drawing was created using CADD. All field and office changes are to be routed through Main Office in East Joliet. DO NOT make changes to this original copy without notifying the Engineer-Signals, Communications & Electrical.

NO	DESCRIPTION	BY	CHK'D	DATE
8				
7				
6				
5				
4				
3				
2				
1				
	AS IN SERVICE	TWH	TWH	XX/XX

REVISIONS

ELGIN, JOLIET & EASTERN RAILWAY COMPANY

TERMINAL BOARD LAYOUT
116TH STREET
FRANKFORT, ILLINOIS

ENGINEERING SERVICES
JOLIET, IL 60432
SCALE — NONE —

CHECKED BY TWH
IN CHARGE OF TWH

DRAWN BY TWH
DATE 12/18/08
CAD ID 260620E-013.DWG

FILE NO. 260620E | SHEET NO. 13 | CONT'D ON 14

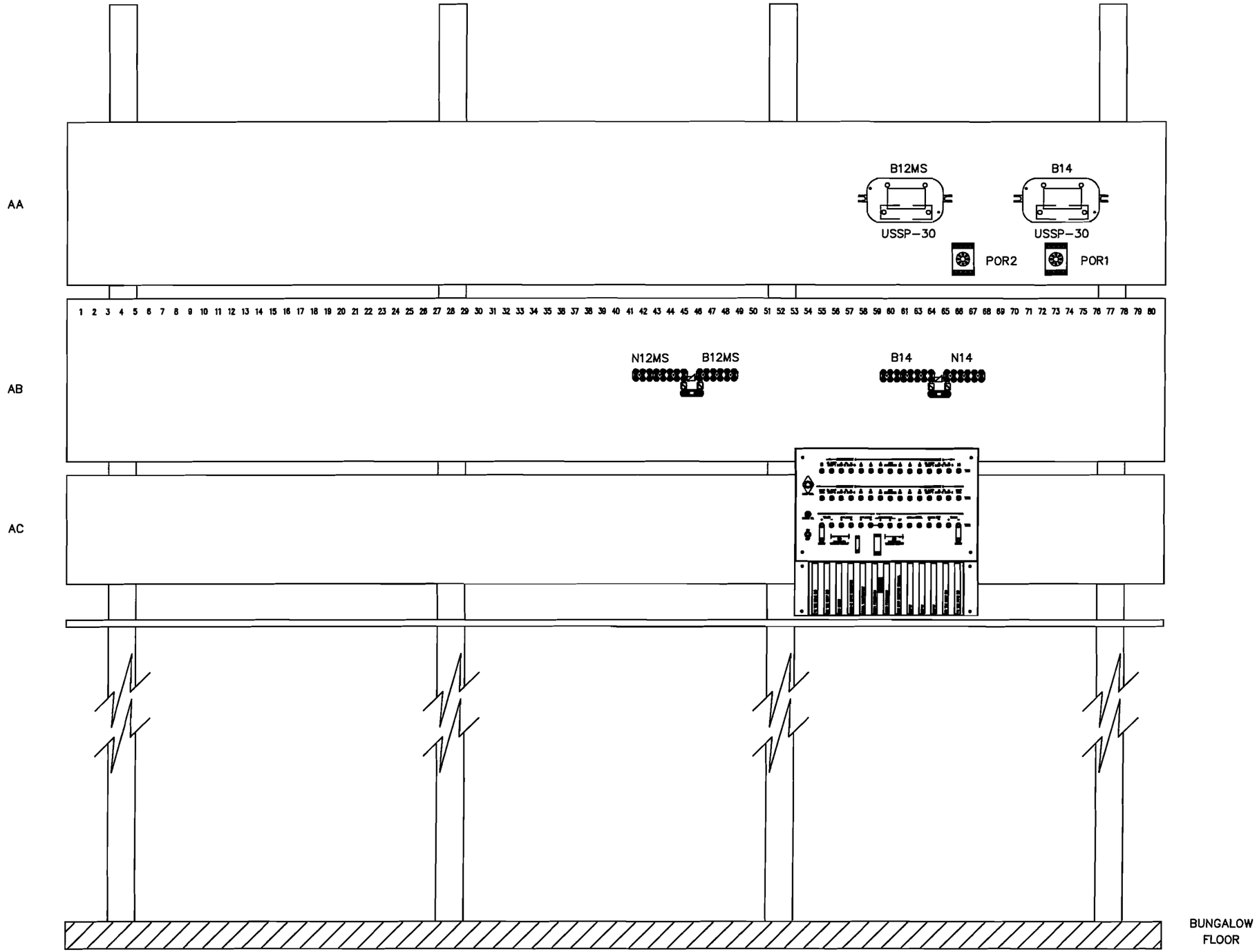

This drawing was created using CADD. All field and office changes are to be routed through Main Office in East Joliet. DO NOT make changes to this original copy without notifying the Engineer—Signals, Communications & Electrical.

NO	DESCRIPTION	BY	CHK'D	DATE
8				
7				
6				
5				
4				
3				
2				
1				
	AS IN SERVICE	TWH	TWH	XX/XX

REVISIONS

ELGIN, JOLIET & EASTERN RAILWAY COMPANY

WALL "A" LAYOUT DETAIL
116TH STREET
FRANKFORT, ILLINOIS

ENGINEERING SERVICES
JOLIET, IL 60432
SCALE NONE

CHECKED BY TWH
IN CHARGE OF TWH

DRAWN BY TWH
DATE 12/18/08
CAD ID 260620E-014.DWG

FILE NO. 260620E | SHEET NO. 14 | CONT'D ON —

ELGIN, JOLIET & EASTERN RAILWAY COMPANY
HIGHWAY CROSSING WARNING SYSTEM

116TH STREET REMOTE
FRANKFORT, ILLINOIS

RECEIVED
DEC 1 8 2008
Illinois Commerce Commission
RAIL SAFETY SECTION

This drawing was created using CADD. All field and office changes are to be routed through Main Office in East Joliet. DO NOT make changes to this original copy without notifying the Engineer-Signals, Communications & Electrical

NO	DESCRIPTION	BY	CHK'D	DATE
8				
7				
6				
5				
4				
3				
2				
1				
	AS IN SERVICE	TWH	TWH	XX/XX

REVISIONS

ELGIN, JOLIET & EASTERN RAILWAY COMPANY

HIGHWAY CROSSING WARNING SYSTEM
116TH STREET REMOTE
FRANKFORT, ILLINOIS

ENGINEERING SERVICES
JOLIET, IL 60432
SCALE NONE

CHECKED BY TWH
IN CHARGE OF TWH

DRAWN BY TWH
DATE 01/23/08
CAD ID 116RCH-COV.DWG

FILE NO. 116REM | SHEET NO. COVER | CONT'D ON 0

DESCRIPTION	SHEET NO.	DWG. NO.
COVER	COVER	116REM-COV
INDEX	0	116REM-000
NOT USED	1	116REM-001
HXP 1 WIRING	2	116REM-002
HXP 2 WIRING	2A	116REM-002A
REMOTE INTERCONNECT CIRCUITS	3	116REM-003
HXP 1 SET UP SHEET	4	116REM-004
HXP 2 SET UP SHEET	4A	116REM-004A
NOT USED	7	116REM-007
BATTERY BUS & RECTIFIER WIRING	8	116REM-008
HCA WIRING	9	116REM-009
RTU WIRING	9A	116REM-009A
HOUSE LAYOUT	10	116REM-010
EQUIPMENT RACK LAYOUT	11	116REM-011
AC POWER DISTRIBUTION	12	116REM-012
WALL"C" LAYOUT DETAIL	13	116REM-013

This drawing was created using CADD. All field and office changes are to be routed through Main Office in East Joliet. DO NOT make changes to this original copy without notifying the Engineer-Signals, Communications & Electrical

NO	DESCRIPTION	BY	CHK'D	DATE
8				
7				
6				
5				
4				
3				
2				
1				
	AS IN SERVICE	TWH	TWH	XX/XX

REVISIONS

ELGIN, JOLIET & EASTERN RAILWAY COMPANY

SIGNAL PRINT INDEX
116TH STREET REMOTE
FRANKFORT, ILLINOIS

ENGINEERING SERVICES
JOLIET, IL 60432
SCALE NONE

CHECKED BY TWH
IN CHARGE OF TWH

DRAWN BY TWH
DATE 01/23/08
CAD ID 116REM-000.DWG

FILE NO. 116REM | SHEET NO. 0 | CONT'D ON 1

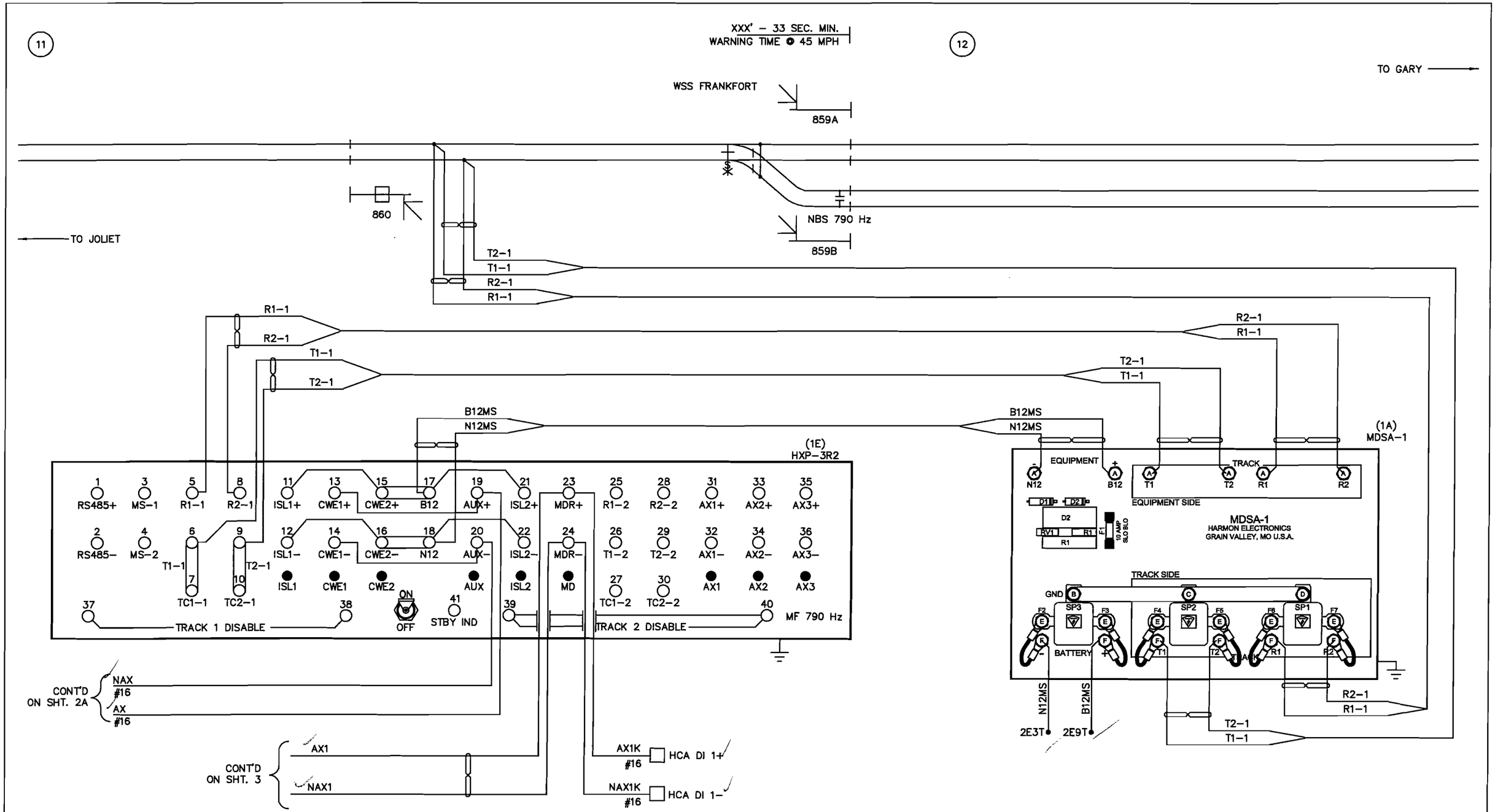

= TWIST TWO TURNS PER FOOT.

NOTES: 1. ALL WIRING THIS PAGE TO BE #10 AWG UNLESS OTHERWISE NOTED.

This drawing was created using CADD. All field and office changes are to be routed through Main Office in East Joliet. DO NOT make changes to this original copy without notifying the Engineer–Signals, Communications & Electrical

NO	DESCRIPTION	BY	CHK'D	DATE
8				
7				
6				
5				
4				
3				
2				
1				
	AS IN SERVICE	TWH	TWH	XX/03

REVISIONS

ELGIN, JOLIET & EASTERN RAILWAY COMPANY

HXP WIRING
116TH STREET REMOTE
FRANKFORT, ILLINOIS

ENGINEERING SERVICES
JOLIET, IL 60432
SCALE NONE

CHECKED BY TWH
IN CHARGE OF TWH

DRAWN BY TWH
DATE 01/23/08
CAD ID 116REM-002.DWG

FILE NO. 116REM | SHEET NO. 2 | CONT'D ON 2A

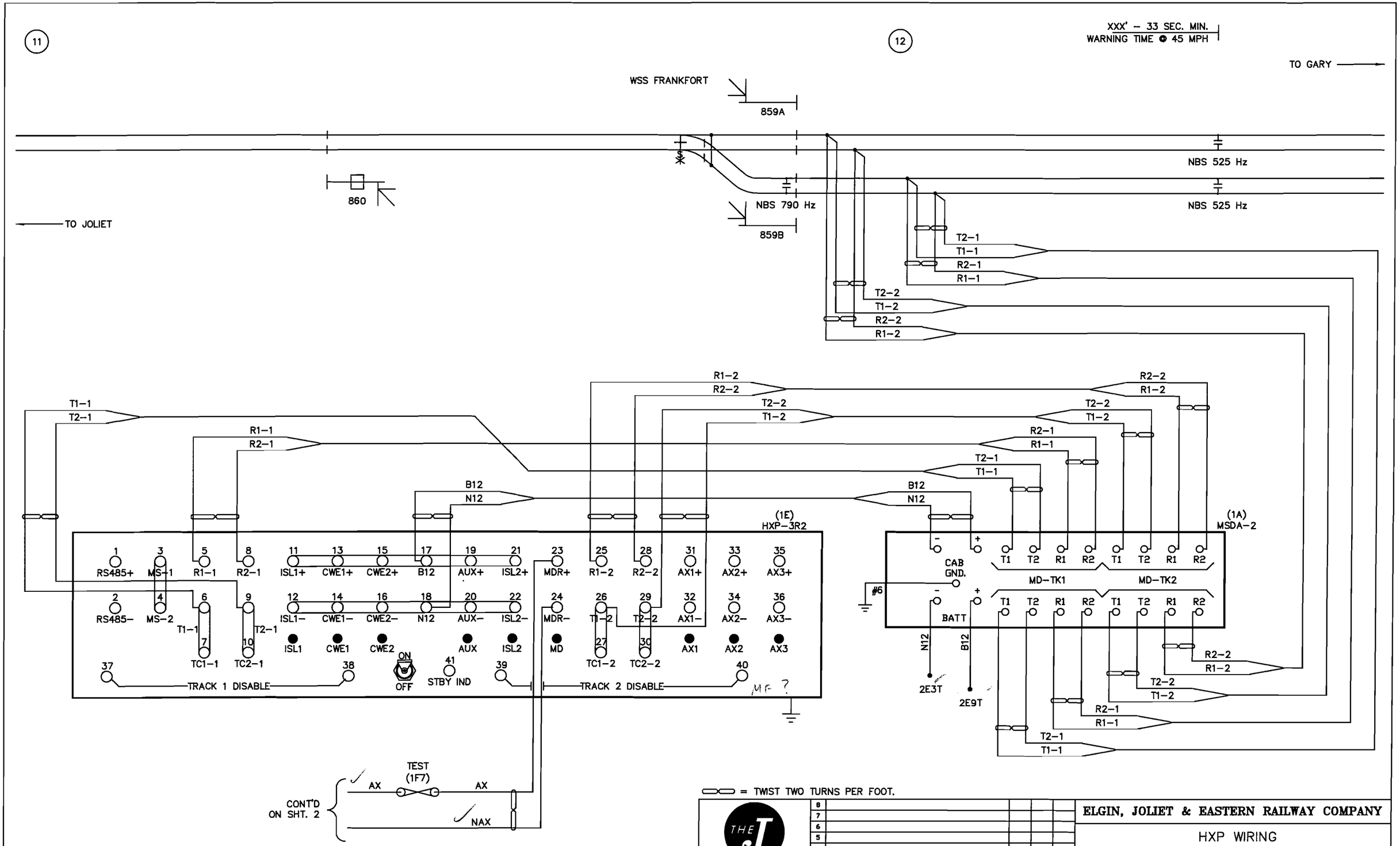

NOTES: 1. ALL WIRING THIS PAGE TO BE #10 AWG UNLESS OTHERWISE NOTED.

This drawing was created using CADD. All field and office changes are to be routed through Main Office in East Joliet. DO NOT make changes to this original copy without notifying the Engineer– Signals, Communications & Electrical.

NO	DESCRIPTION	BY	CHK'D	DATE
	AS IN SERVICE	TWH	TWH	XX/03

REVISIONS

ELGIN, JOLIET & EASTERN RAILWAY COMPANY

HXP WIRING
116TH STREET REMOTE
FRANKFORT, ILLINOIS

ENGINEERING SERVICES
JOLIET, IL 60432
SCALE NONE

CHECKED BY TWH
IN CHARGE OF TWH

DRAWN BY TWH
DATE 01/23/98
CAD ID 116REM-002.DWG

FILE NO. 116REM
SHEET NO. 2A
CONT'D ON 3

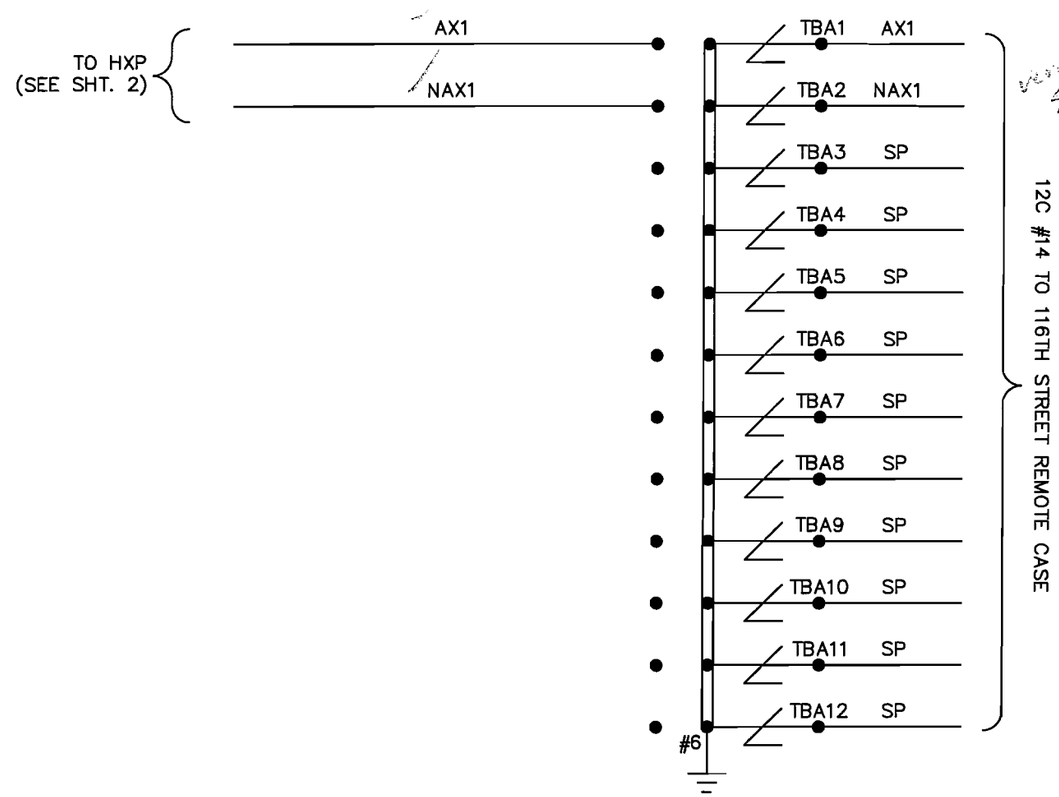

verified on other set of plans.

NO	DESCRIPTION	BY	CHK'D	DATE
8				
7				
6				
5				
4				
3				
2				
1				
	AS IN SERVICE	TWH	TWH	XX/XX

REVISIONS

This drawing was created using CADD. All field and office changes are to be routed through Main Office in East Joliet. DO NOT make changes to this original copy without notifying the Engineer-Signals, Communications & Electrical.

ELGIN, JOLIET & EASTERN RAILWAY COMPANY

REMOTE INTERCONNECT CIRCUITS
116TH STREET REMOTE
FRANKFORT, ILLINOIS

ENGINEERING SERVICES
JOLIET, IL 60432
SCALE NONE

CHECKED BY TWH
IN CHARGE OF TWH

DRAWN BY TWH
DATE 01/23/08
CAD ID 116REM-003.DWG

FILE NO. 116REM | SHEET NO. 3 | CONT'D ON 4

Grade Crossing Location Record

Cabinet Number (Option 90) XXXX

Location 116TH STREET REMOTE Milepost 11.49 DOT 260 620E Date XX / XX / 09

Operating Program HPN _____ Version 42.0

System Monitor Program HPN _____ Version 20.3

Hardware Settings

Track 1 Master ☒ Slave ☐ 4 kHz ☐ 8 kHz ☒

LOS jumper 0 ☐ 1 ☒ 2 ☐ Fault jumper 0 ☒ 1 ☐

Approach configuration switch position: Normal ☒ Short ☐ Very Short ☐

Track 2 Master ☐ Slave ☐ 4 kHz ☐ 8 kHz ☐

LOS jumper 0 ☐ 1 ☐ 2 ☐ Fault jumper 0 ☐ 1 ☐

Approach configuration switch position: Normal ☐ Short ☐ Very Short ☐

Adjust Select Adjustments

No.	Adjustment	Default	Range	Track 1	Track 2
1	Approach Length	9,999	0 - 9,999	XXX feet	feet
2	Warning Time	99	23 - 99	25 seconds	seconds
3	LIA	0	-9 to +9	0 steps	steps
4	TC (1 step = 32)	395	430 - 470	X steps	steps
5	MD Restart	99%	0 - 99%	0 RX	RX

Option Adjustments

No.	Adjustment	Default	Range	Track 1	Track 2
0	RX	0	1-100		
1	TK-ENA	UP	UP or dn	UP ☒ dn ☐	UP ☐ dn ☒
2	TK FO	0	0 - 9999	790 Hz	Hz
3	CW/MD	d	C to d	C ☒ d ☐	C ☐ d ☐
4	UNI-BI	b	U - b	U ☐ b ☒	U ☐ b ☐
5	NBS-C	0	0 - 99	XXX	RX
		9,999	RX dependant	XXXX	feet
6	CWEWT	80	0 - 99	80	seconds
7	LOS	16	4 - 99	16	seconds
8	IJ-LOS	5	3 - 99	5	seconds
9	BC	frequency dependant	50 -250	XXX	
10	P-COMP	0	0 - 10	XX	degrees

HXP-3, HXP-3R, HXP-3R2

AX Adjustment Options

NOTE: NO AX DRIVE IS USED AT THIS LOCATION

	Default	Range	Option 11 - AX1	Option 12 - AX2	Option 13 - AX3
TK-ASN		1, 2, Both	1 ☐ 2 ☐ Both ☐	1 ☐ 2 ☐ Both ☐	1 ☐ 2 ☐ Both ☐
OF-TK1	0	0 - 9,999	feet	feet	feet
OF-TK2	0	0 - 9,999	feet	feet	feet
WT	99	23 - 99	seconds	seconds	seconds
MD-RST	99	0 - 99%	RX	RX	RX
CW/MD	d	C or d	C ☐ d ☐	C ☐ d ☐	C ☐ d ☐
CJ-LOS	0	3 - 99	seconds	seconds	seconds
PJ-DET	15	4 - 15	seconds	seconds	seconds
POS-ST	dn	UP or dn	UP ☐ dn ☐	UP ☐ dn ☐	UP ☐ dn ☐

No.	Adjustment	Default	Range	Track 1	Track 2
17	MDR-AX	n*	n or A	n ☒ A ☐	n ☐ A ☐
	OF-TK1	0	0 - 9,999	feet	
	OF-TK2	0	0 - 9,999		feet
	CJ-LOS	0	3 - 99	seconds	seconds
	PJ-DET	15	4 - 15	seconds	seconds
18	MD-TMR	10	10-99 (0=disable)	10 minutes	minutes
19	MIN-WT	0	23-99 (0=disable)	0 seconds	seconds
20	FS-DET	0	10-30 (0=disable)	0 minutes	minutes
21	POS-RX	0	0 - 74 (0=disable)	0 RX	RX
	POS-TM	0	0 - 99**	0 minutes	minutes
22	AR-TMR	0	0-80 (0=disable)	0 minutes	minutes
47	ATO-RX	dn	UP or dn	UP ☐ dn ☒	UP ☐ dn ☐
48	PF-ENA	UP	UP or dn	UP ☒ dn ☐	UP ☐ dn ☐

***n = not an AX drive (no options available)**

****0 = disable, 99 = continuous**

Shunt Record

West Approach		No Shunt RX	No Shunt Phase	100% Shunt RX	100% Shunt Phase	50% Shunt	50% Shunt RX	50% Shunt Phase	LIA Added ±1 to 9
Track 1	Normal								
	Standby								
Track 2	Normal								
	Standby								
East Approach									
Track 1	Normal	XX	XX	XX			XX		XX
	Standby								
Track 2	Normal								
	Standby								

This drawing was created using CADD. All field and office changes are to be routed through Main Office in East Joliet. DO NOT make changes to this original copy without notifying the Engineer-Signals, Communications & Electrical.

NO	DESCRIPTION	BY	CHK'D	DATE
8				
7				
6				
5				
4				
3				
2				
1				
	AS IN SERVICE	TWH	TWH	XX/XX

REVISIONS

ELGIN, JOLIET & EASTERN RAILWAY COMPANY

HXP 1 SETUP SHEET
116TH STREET REMOTE
FRANKFORT, ILLINOIS

ENGINEERING SERVICES JOLIET, IL 60432 SCALE NONE

CHECKED BY TWH IN CHARGE OF TWH

DRAWN BY TWH DATE 01/23/08 CAD ID 116REM-004JWG

FILE NO. 116REM SHEET NO. 4 CONT'D ON 4A

Grade Crossing Location Record

Cabinet Number (Option 90) XXXX

Location 116TH STREET REMOTE Milepost 11.49 DOT 260 620E Date XX / XX / 09

Operating Program HPN _____ Version 42.0

System Monitor Program HPN _____ Version 20.3

Hardware Settings

Track 1 Master ☒ Slave ☐ 4 kHz ☐ 8 kHz ☒

LOS jumper 0 ☐ 1 ☒ 2 ☐ Fault jumper 0 ☒ 1 ☐

Approach configuration switch position: Normal ☒ Short ☐ Very Short ☐

Track 2 Master ☐ Slave ☐ 4 kHz ☐ 8 kHz ☐

LOS jumper 0 ☐ 1 ☐ 2 ☐ Fault jumper 0 ☐ 1 ☐

Approach configuration switch position: Normal ☐ Short ☐ Very Short ☐

Adjust Select Adjustments

No.	Adjustment	Default	Range	Track 1	Track 2
1	Approach Length	9,999	0 - 9,999	XXX feet	feet
2	Warning Time	99	23 - 99	25 seconds	seconds
3	LIA	0	-9 to +9	0 steps	steps
4	TC (1 step = 32)	395	430 - 470	X steps	steps
5	MD Restart	99%	0 - 99%	0 RX	RX

Option Adjustments

No.	Adjustment	Default	Range	Track 1	Track 2
0	RX	0	1-100		
1	TK-ENA	UP	UP or dn	UP ☒ dn ☐	UP ☐ dn ☒
2	TK FO	0	0 - 9999	525 Hz	Hz
3	CW/MD	d	C to d	C ☒ d ☐	C ☐ d ☐
4	UNI-BI	b	U - b	U ☐ b ☒	U ☐ b ☐
5	NBS-C	0	0 - 99	XXX	RX
		9,999	RX dependant	XXXX	feet
6	CWEWT	80	0 - 99	80	seconds
7	LOS	16	4 - 99	16	seconds
8	IJ-LOS	5	3 - 99	5	seconds
9	BC	frequency dependant	50 -250	XXX	
10	P-COMP	0	0 - 10	XX	degrees

HXP-3, HXP-3R, HXP-3R2

AX Adjustment Options

NOTE: NO AX DRIVE IS USED AT THIS LOCATION

	Default	Range	Option 11 - AX1	Option 12 - AX2	Option 13 - AX3
TK-ASN		1, 2, Both	1 ☐ 2 ☐ Both ☐	1 ☐ 2 ☐ Both ☐	1 ☐ 2 ☐ Both ☐
OF-TK1	0	0 - 9,999	feet	feet	feet
OF-TK2	0	0 - 9,999	feet	feet	feet
WT	99	23 - 99	seconds	seconds	seconds
MD-RST	99	0 - 99%	RX	RX	RX
CW/MD	d	C or d	C ☐ d ☐	C ☐ d ☐	C ☐ d ☐
CJ-LOS	0	3 - 99	seconds	seconds	seconds
PJ-DET	15	4 - 15	seconds	seconds	seconds
POS-ST	dn	UP or dn	UP ☐ dn ☐	UP ☐ dn ☐	UP ☐ dn ☐

No.	Adjustment	Default	Range	Track 1	Track 2
17	MDR-AX	n*	n or A	n ☒ A ☐	n ☐ A ☐
	OF-TK1	0	0 - 9,999	feet	
	OF-TK2	0	0 - 9,999		feet
	CJ-LOS	0	3 - 99	seconds	seconds
	PJ-DET	15	4 - 15	seconds	seconds
18	MD-TMR	10	10-99 (0=disable)	10 minutes	minutes
19	MIN-WT	0	23-99 (0=disable)	0 seconds	seconds
20	FS-DET	0	10-30 (0=disable)	0 minutes	minutes
21	POS-RX	0	0 - 74 (0=disable)	0 RX	RX
	POS-TM	0	0 - 99**	0 minutes	minutes
22	AR-TMR	0	0-80 (0=disable)	0 minutes	minutes
47	ATO-RX	dn	UP or dn	UP ☐ dn ☒	UP ☐ dn ☐
48	PF-ENA	UP	UP or dn	UP ☒ dn ☐	UP ☐ dn ☐

***n = not an AX drive (no options available)**

****0 = disable, 99 = continuous**

Shunt Record

West Approach		No Shunt RX	No Shunt Phase	100% Shunt RX	100% Shunt Phase	50% Shunt	50% Shunt RX	50% Shunt Phase	LIA Added ±1 to 9
Track 1	Normal								
	Standby								
Track 2	Normal								
	Standby								
East Approach									
Track 1	Normal	XX	XX	XX			XX		XX
	Standby								
Track 2	Normal								
	Standby								

This drawing was created using CADD. All field and office changes are to be routed through Main Office in East Joliet. DO NOT make changes to this original copy without notifying the Engineer-Signals, Communications & Electrical

NO	DESCRIPTION	BY	CHK'D	DATE
8				
7				
6				
5				
4				
3				
2				
1				
	AS IN SERVICE	TWH	TWH	XX/XX

REVISIONS

ELGIN, JOLIET & EASTERN RAILWAY COMPANY

HXP 2 SETUP SHEET
116TH STREET REMOTE
FRANKFORT, ILLINOIS

ENGINEERING SERVICES
JOLIET, IL 60432
SCALE NONE

CHECKED BY TWH
IN CHARGE OF TWH

DRAWN BY TWH
DATE 01/23/09
CAD ID 116REM-004.DWG

FILE NO. 116REM | SHEET NO. 4A | CONT'D ON 5

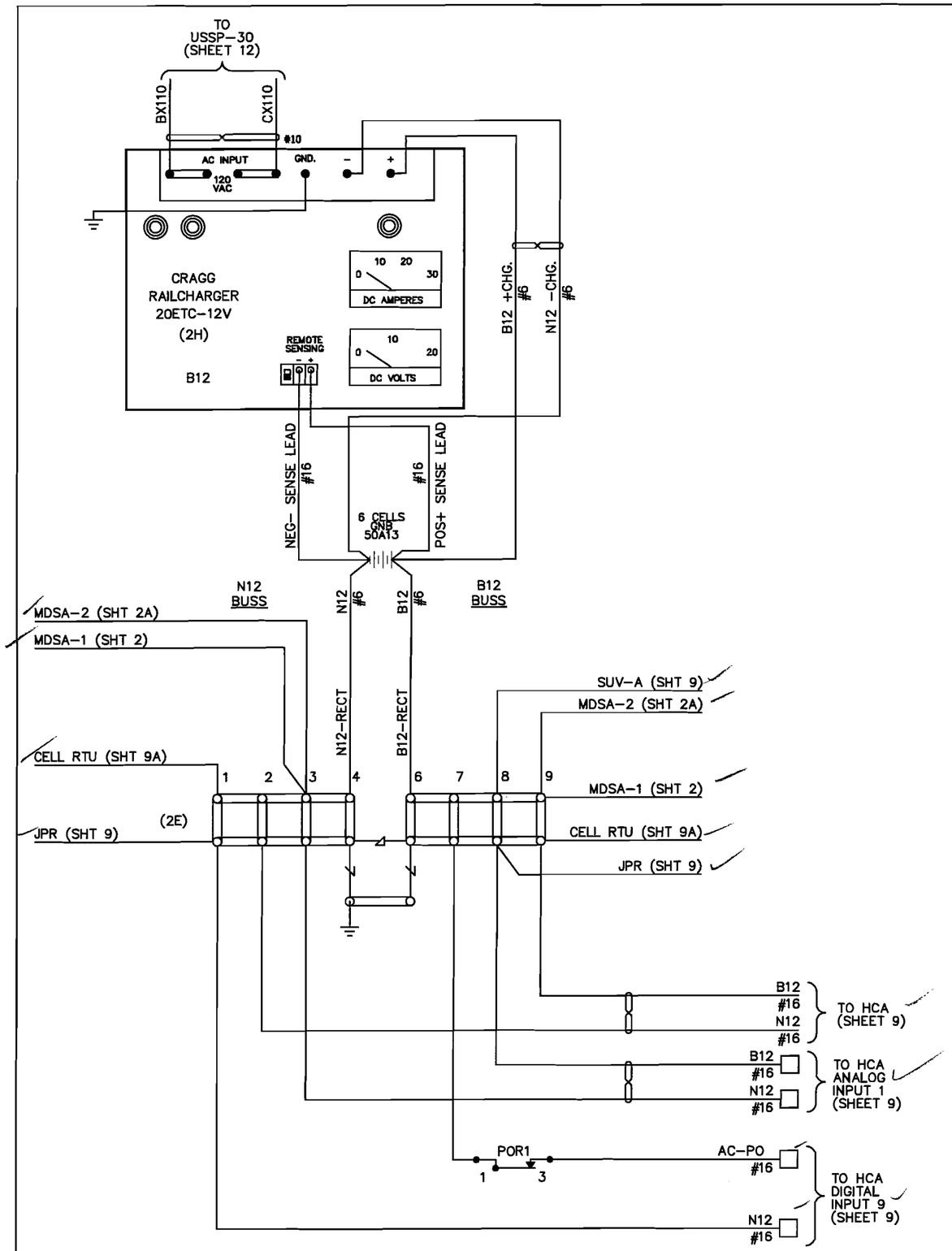

NOTE: ALL WIRING THIS SHEET TO BE #10AWG UNLESS OTHERWISE NOTED.

= TWIST TWO TURNS PER FOOT.

This drawing was created using CADD. All field and office changes are to be routed through Main Office in East Joliet. DO NOT make changes to this original copy without notifying the Engineer-Signals, Communications & Electrical

NO	DESCRIPTION	BY	CHK'D	DATE
8				
7				
6				
5				
4				
3				
2				
1				
	AS IN SERVICE	TWH	TWH	XX/XX

REVISIONS

ELGIN, JOLIET & EASTERN RAILWAY COMPANY

BATTERY BUS & RECTIFIER WIRING
116TH STREET REMOTE
FRANKFORT, ILLINOIS

ENGINEERING SERVICES
JOLIET, IL 60432
SCALE NONE

CHECKED BY TVH
IN CHARGE OF TVH

DRAWN BY TVH
DATE 01/23/08
CAD ID 116REM-008.DWG

FILE NO. 116REM | SHEET NO. 8 | CONT'D ON 9

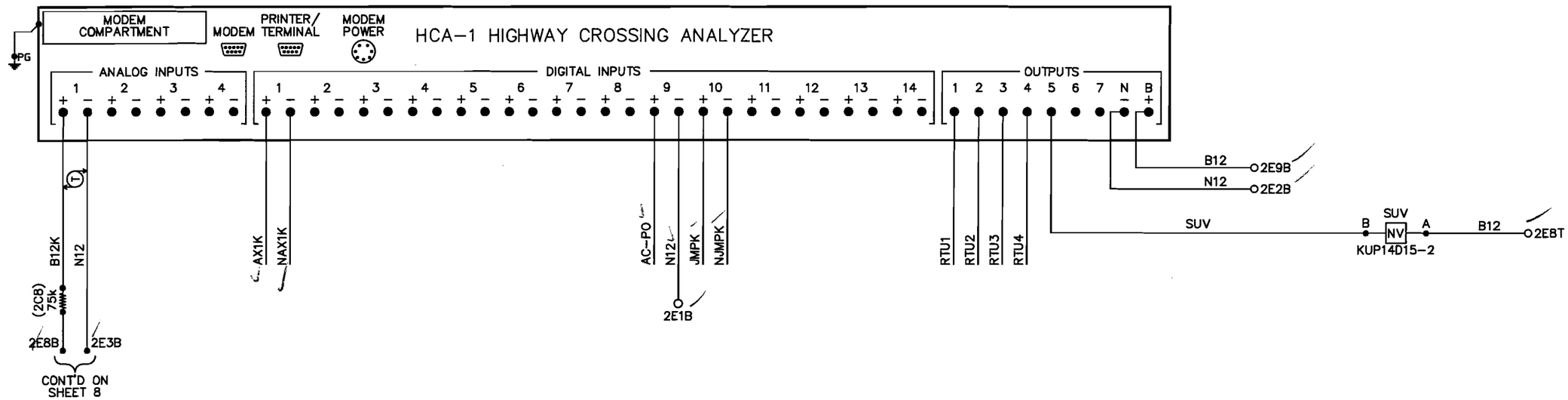

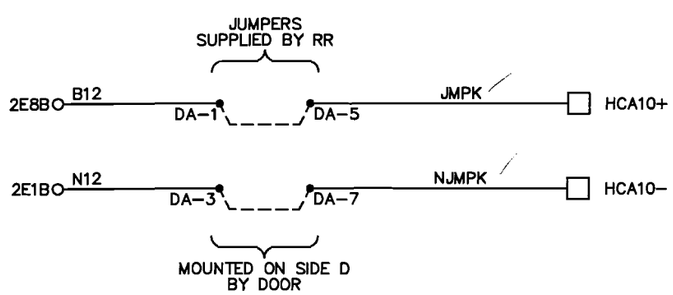

NOTES:

1. ALL WIRING ON THIS SHEET TO BE #16 UNLESS OTHERWISE NOTED.

This drawing was created using CADD. All field and office changes are to be routed through Main Office in East Joliet. DO NOT make changes to this original copy without notifying the Engineer-Signals, Communications & Electrical.

NO	DESCRIPTION	BY	CHK'D	DATE
8				
7				
6				
5				
4				
3				
2				
1				
	AS IN SERVICE	TVH	TVH	XX/XX

REVISIONS

ELGIN, JOLIET & EASTERN RAILWAY COMPANY

HCA WIRING
116TH STREET REMOTE
FRANKFORT, ILLINOIS

ENGINEERING SERVICES
JOLIET, IL 60432
SCALE NONE

CHECKED BY TVH
IN CHARGE OF TVH

DRAWN BY TVH
DATE 01/23/08
CAD ID 116REM-009.DWG

FILE NO. 116REM | SHEET NO. 9 | CONT'D ON 9A

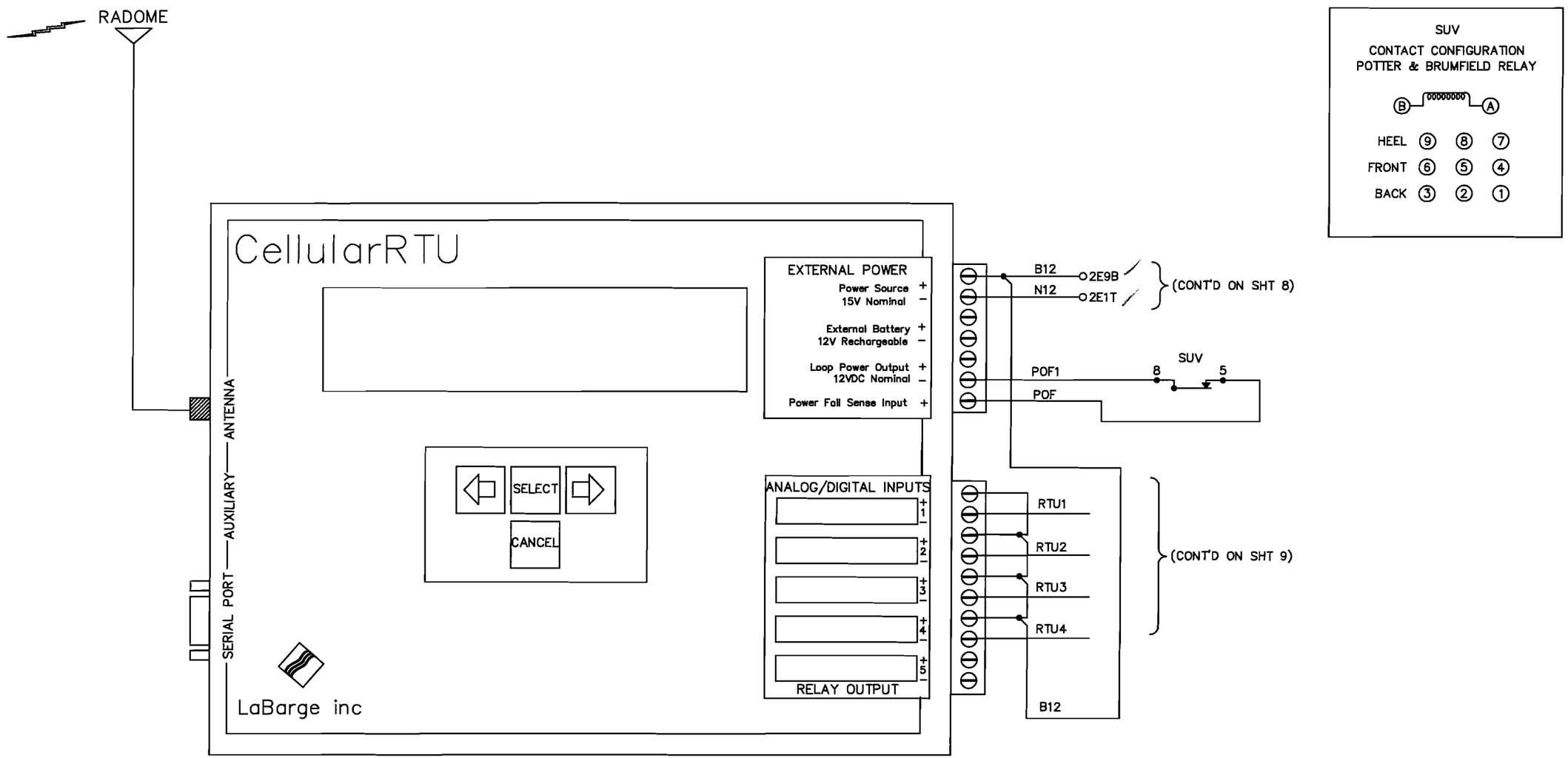

THE J

This drawing was created using CADD. All field and office changes are to be routed through Main Office in East Joliet. DO NOT make changes to this original copy without notifying the Engineer-Signals, Communications & Electrical

NO	DESCRIPTION	BY	CHK'D	DATE
8				
7				
6				
5				
4				
3				
2				
1				
	AS IN SERVICE	TWH	TWH	XX/XX

REVISIONS

ELGIN, JOLIET & EASTERN RAILWAY COMPANY

RTU WIRING
116TH STREET REMOTE
FRANKFORT, ILLINOIS

ENGINEERING SERVICES
JOLIET, IL 60432
SCALE NONE

CHECKED BY TWH
IN CHARGE OF TWH

DRAWN BY TWH
DATE 01/23/08
CAD ID [illegible]

FILE NO. 116REM | SHEET NO. 9A | CONT'D ON 10

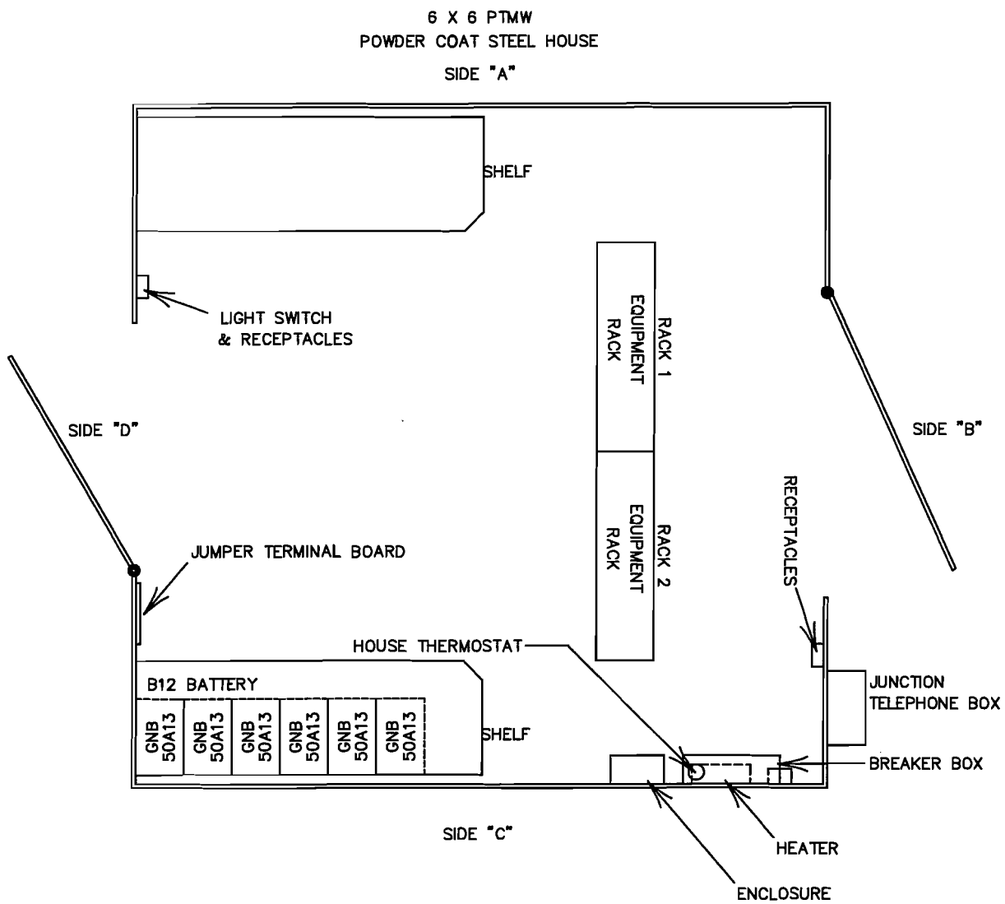

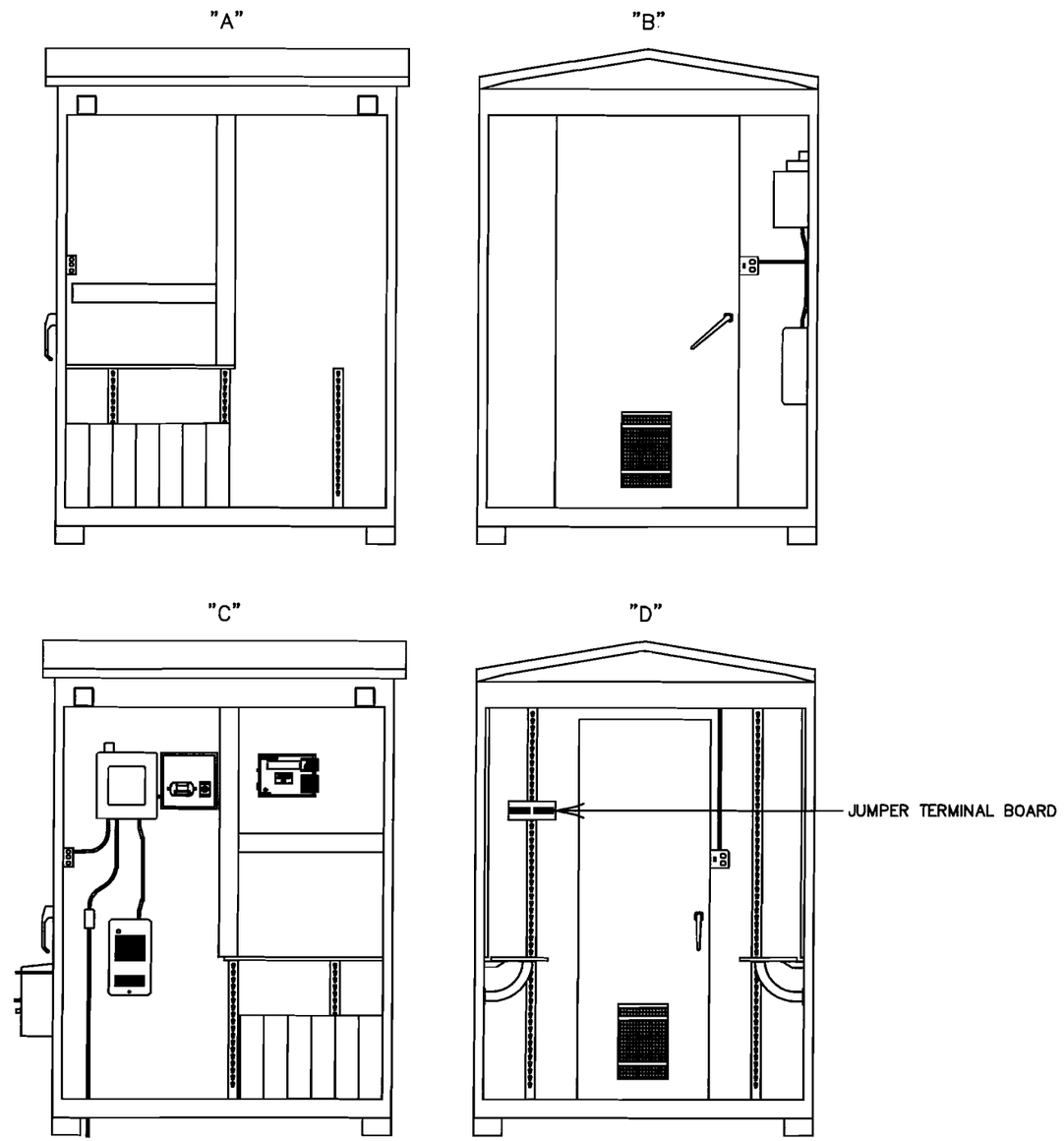

This drawing was created using CADD. All field and office changes are to be routed through Main Office in East Joliet. DO NOT make changes to this original copy without notifying the Engineer-Signals, Communications & Electrical

NO	DESCRIPTION	BY	CHK'D	DATE
8				
7				
6				
5				
4				
3				
2				
1				
	AS IN SERVICE	TWH	TWH	XX/XX

REVISIONS

ELGIN, JOLIET & EASTERN RAILWAY COMPANY

HOUSE LAYOUT
116TH STREET REMOTE
FRANKFORT, ILLINOIS

ENGINEERING SERVICES
JOLIET, IL 60432
SCALE NONE

CHECKED BY TWH
IN CHARGE OF TWH

DRAWN BY TWH
DATE 01/23/09
CAD ID 116REM-010.DWG

FILE NO. 116REM | SHEET NO. 10 | CONT'D ON 11

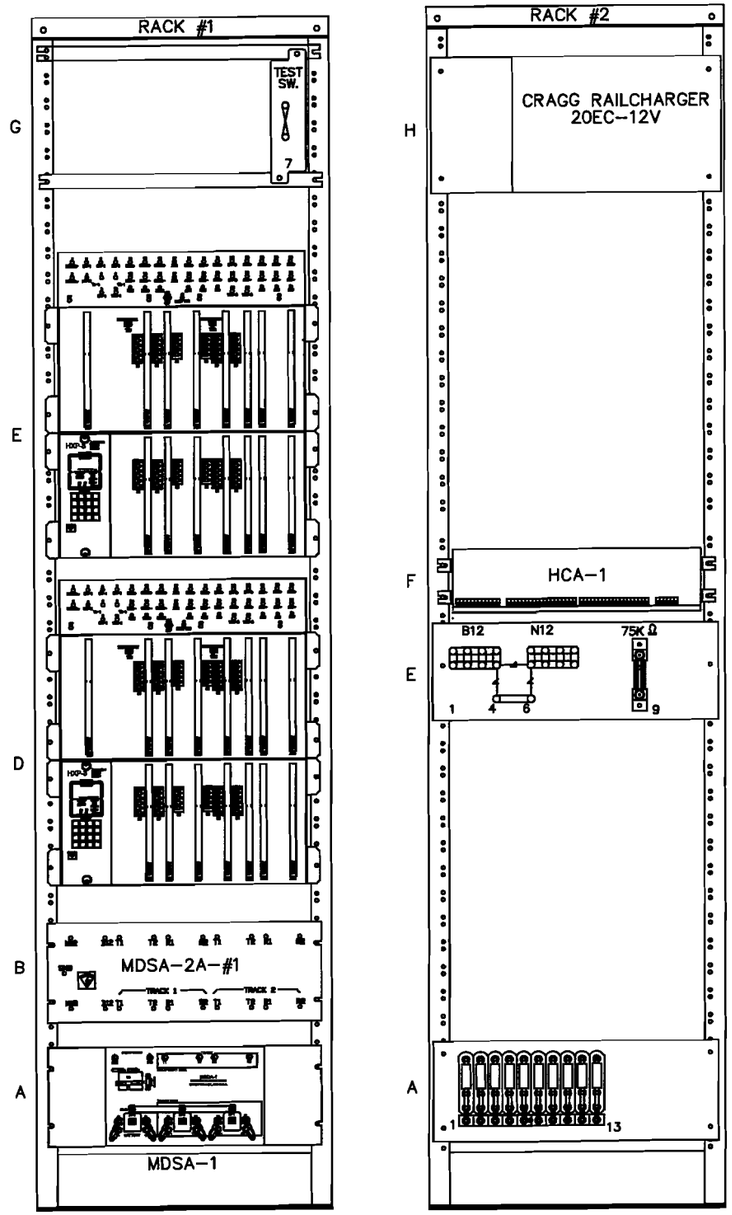

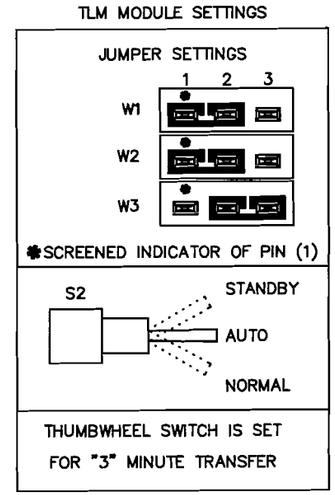

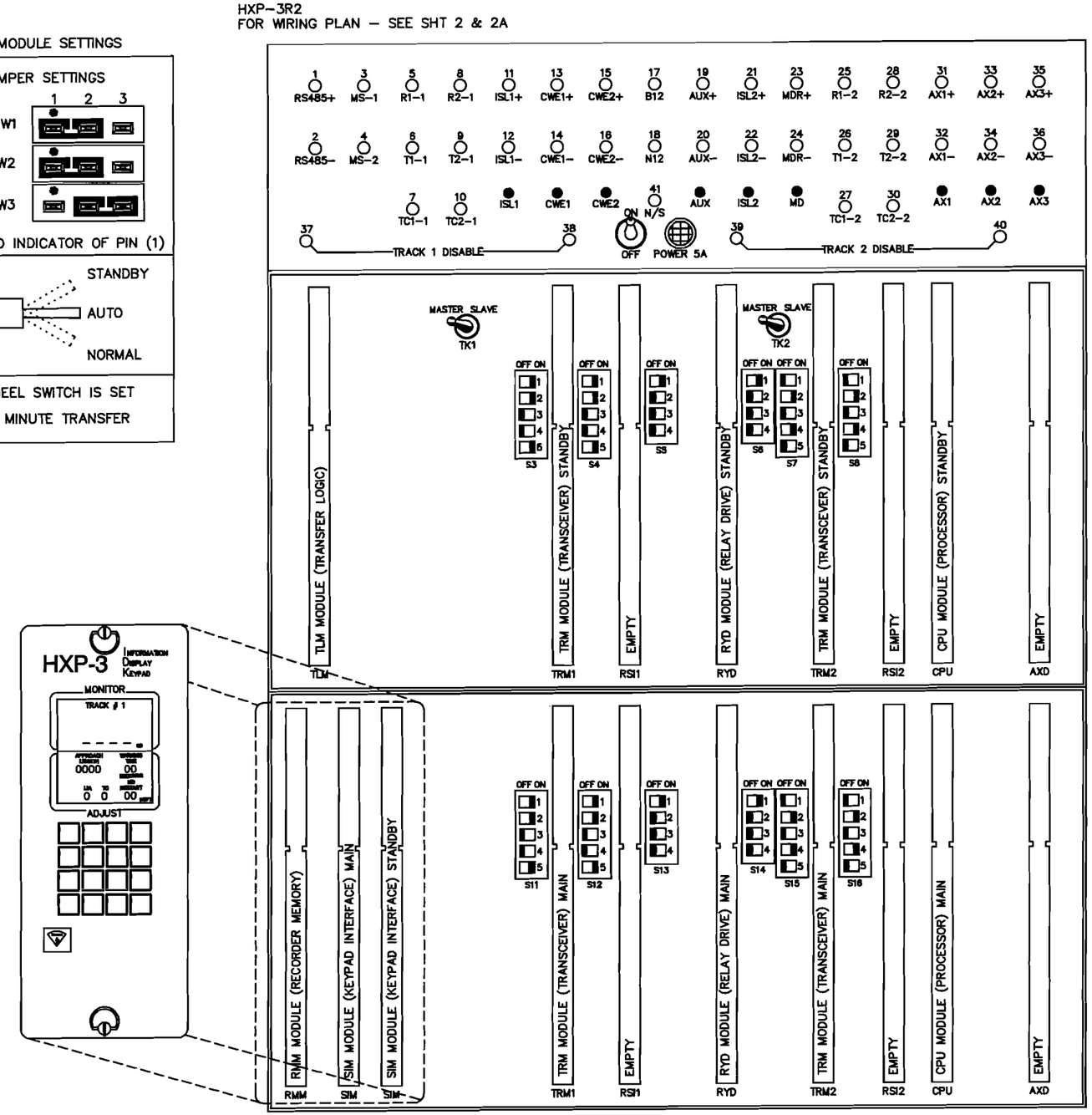

This drawing was created using CADD. All field and office changes are to be routed through Main Office in East Joliet. DO NOT make changes to this original copy without notifying the Engineer-Signals, Communications & Electrical.

NO	DESCRIPTION	BY	CHK'D	DATE
8				
7				
6				
5				
4				
3				
2				
1				
	AS IN SERVICE	TWH	TWH	XX/XX

REVISIONS

ELGIN, JOLIET & EASTERN RAILWAY COMPANY

EQUIPMENT RACK LAYOUT
116TH STREET REMOTE
FRANKFORT, ILLINOIS

ENGINEERING SERVICES
JOLIET, IL 60432
SCALE NONE

CHECKED BY TWH
IN CHARGE OF TWH

DRAWN BY TWH
DATE 01/23/08
CAD ID 116REM-01.DWG

FILE NO. 116REM | SHEET NO. 11 | CONT'D ON 12

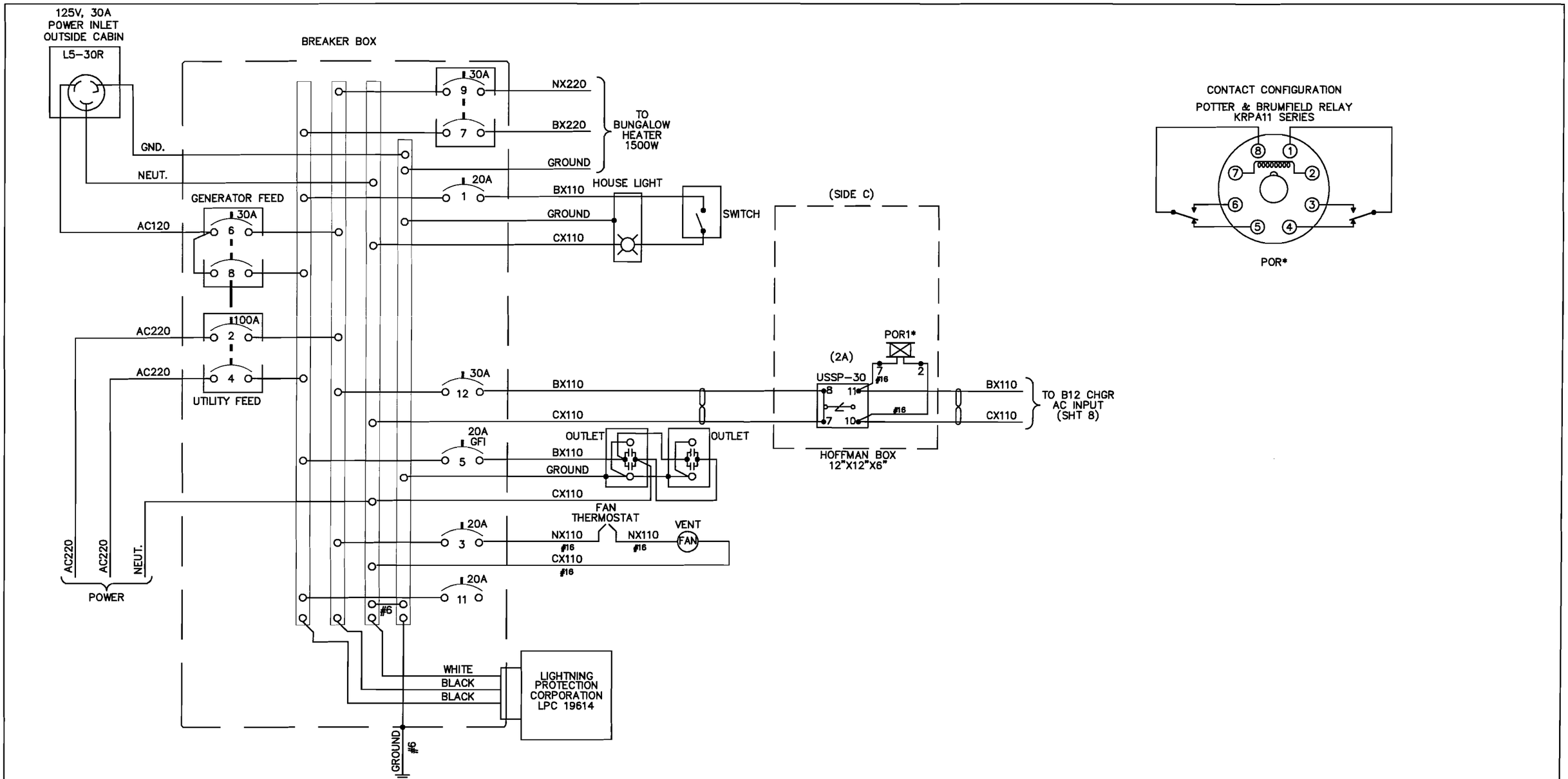

LEGEND:

= TWIST TWO TURNS PER FOOT.

NOTES:

1.) REMOTE TEMPERATURE SENSING BULB TO BE MOUNTED OUTSIDE OF HOUSE.

2.) * = 120VAC NON-VITAL AC RELAY KUP-14A15-120, 5A.

3.) ALL WIRING THIS SHEET TO BE #10 AWG. UNLESS OTHERWISE NOTED.

This drawing was created using CADD. All field and office changes are to be routed through Main Office in East Joliet. DO NOT make changes to this original copy without notifying the Engineer-Signals, Communications & Electrical

NO	DESCRIPTION	BY	CHK'D	DATE
8				
7				
6				
5				
4				
3				
2				
1				
	AS IN SERVICE	TWH	TWH	XX/XX

REVISIONS

ELGIN, JOLIET & EASTERN RAILWAY COMPANY

AC POWER DISTRIBUTION
116TH STREET REMOTE
FRANKFORT, ILLINOIS

ENGINEERING SERVICES
JOLIET, IL 60432
SCALE NONE

CHECKED BY TVH
IN CHARGE OF TVH

DRAWN BY TVH
DATE 01/23/08
CAD ID 116REM-012.DWG

FILE NO. 116REM

SHEET NO. 12

CONT'D ON 13

WALL "C"

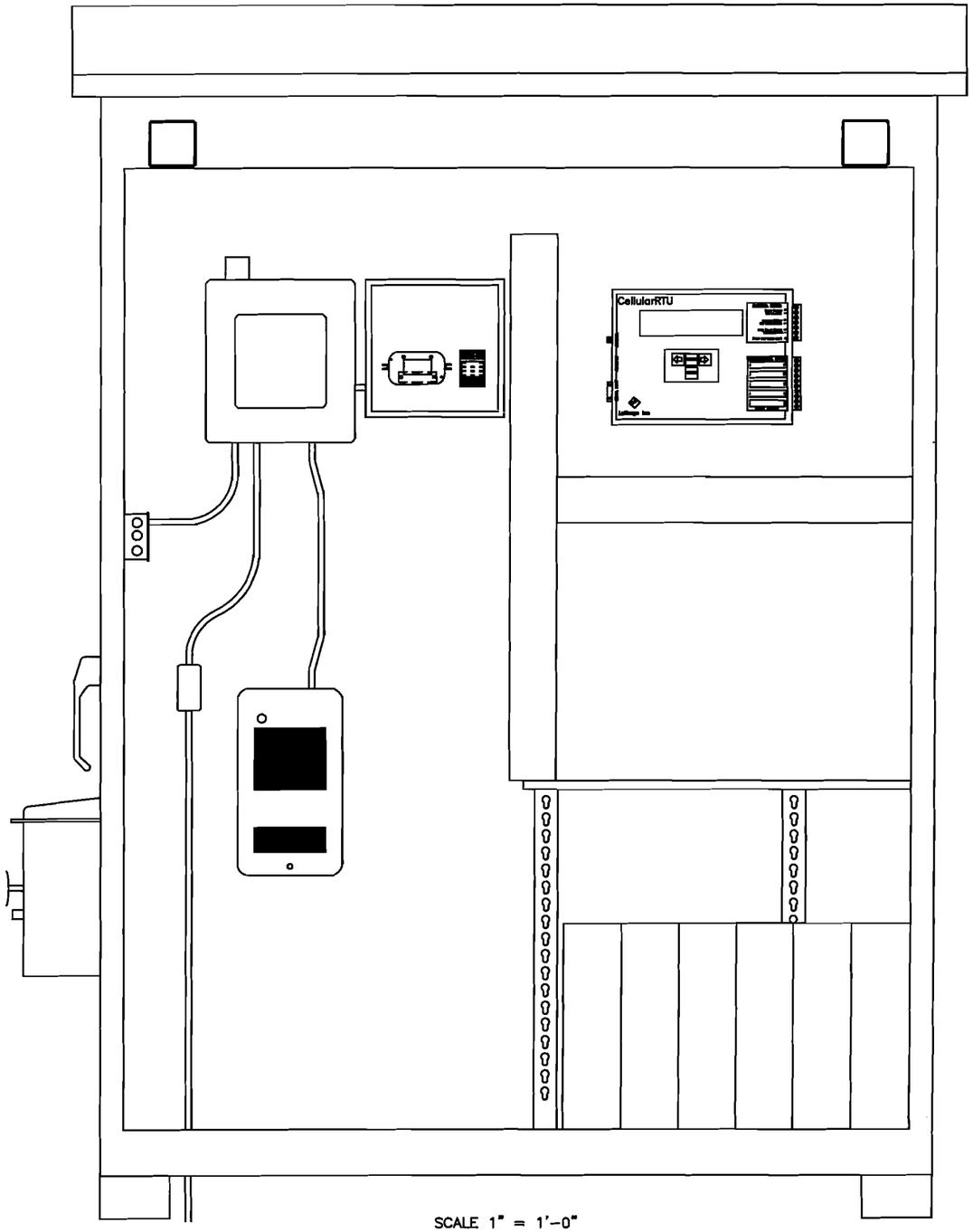

SCALE 1" = 1'-0"

HOFFMAN BOX DETAIL

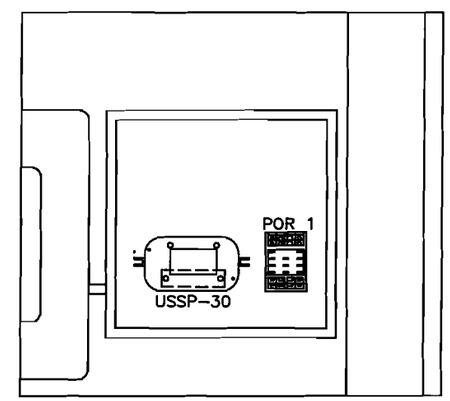

SCALE 3"=1'-0"

This drawing was created using CADD. All field and office changes are to be routed through Main Office in East Joliet. DO NOT make changes to this original copy without notifying the Engineer-Signals, Communications & Electrical

NO	DESCRIPTION	BY	CHK'D	DATE
8				
7				
6				
5				
4				
3				
2				
1				
	AS IN SERVICE	TWH	TWH	XX/XX

REVISIONS

ELGIN, JOLIET & EASTERN RAILWAY COMPANY

WALL "C" LAYOUT DETAIL
116TH STREET REMOTE
FRANKFORT, ILLINOIS

ENGINEERING SERVICES
JOLIET, IL 60432
SCALE NONE

CHECKED BY TWH
IN CHARGE OF TWH

DRAWN BY TWH
DATE 01/23/08
CAD ID 116REM-013.DWG

FILE NO. 116REM | SHEET NO. 13 | CONT'D ON --