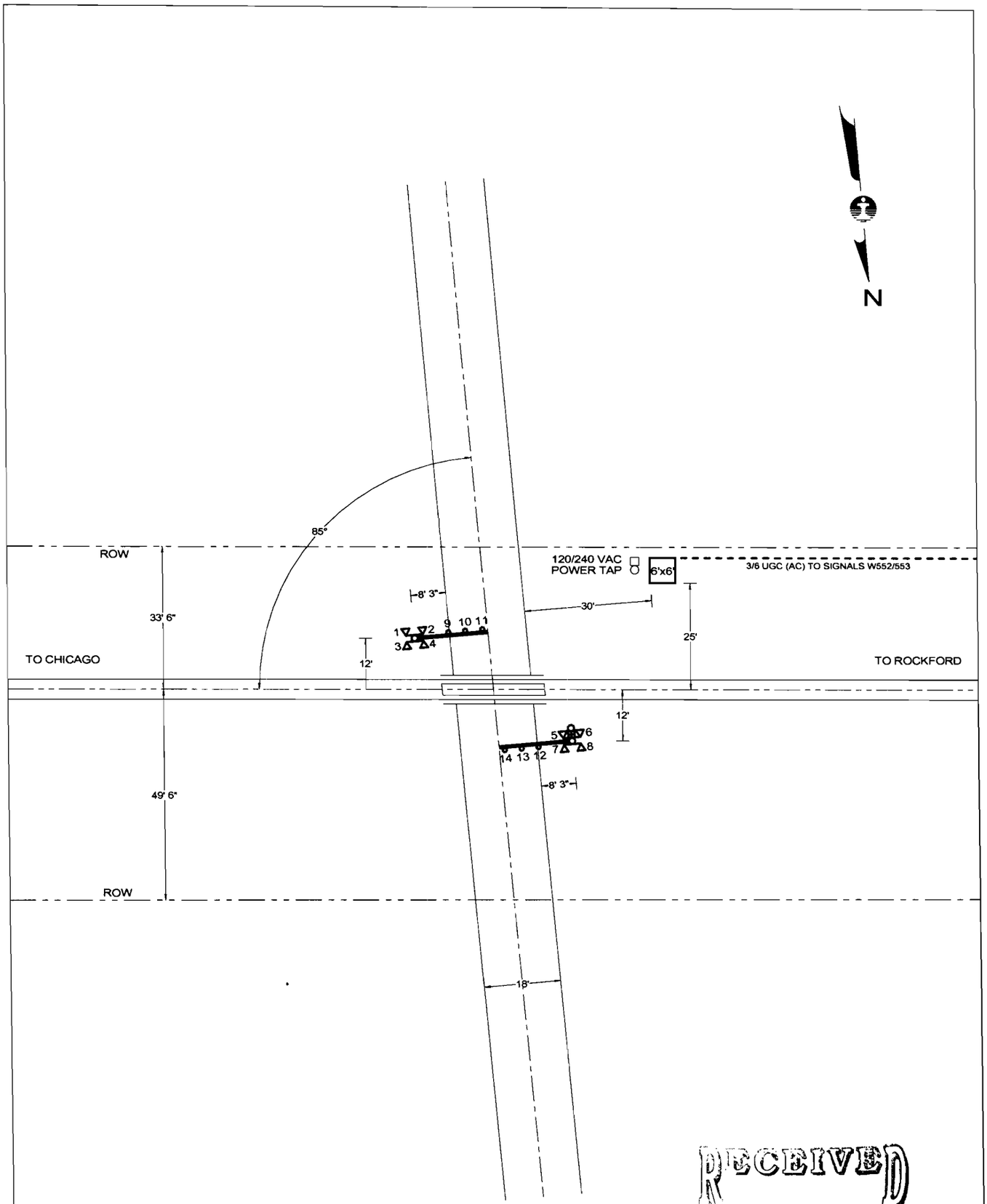

RECEIVED
DEC 1 2 2008
Illinois Commerce Commission
RAIL SAFETY SECTION

PROPOSED
FEB 28, 2006

QUADRANT	SE	NW
STANDARD AFLS	LED	LED
CANTILEVER, FT.	-	-
GATE, FT.	17	17
ADDED LIGHTS	-	-
BARRICADE	-	-
MULTI-TK SIGN	-	-
BELL	-	X
REVISIONS		

E:\DWG\FRE\05482X.CAD

CN

SIGNALS & COMMUNICATIONS, ENGINEERING DEPARTMENT

CITY & STATE: BURLINGTON, IL	SD 1015 X
CROSSING: ENGEL ROAD	DATE: FEB 28, 2006
CCP - 54.82-W	DOT - 289 939V
MIDWEST DIVISION	FREEPORT SUBDIVISION
IN SERVICE	SCALE: 1"=30' / DRAWN BY: AVS

SD 1015 - MP 54 TO 55

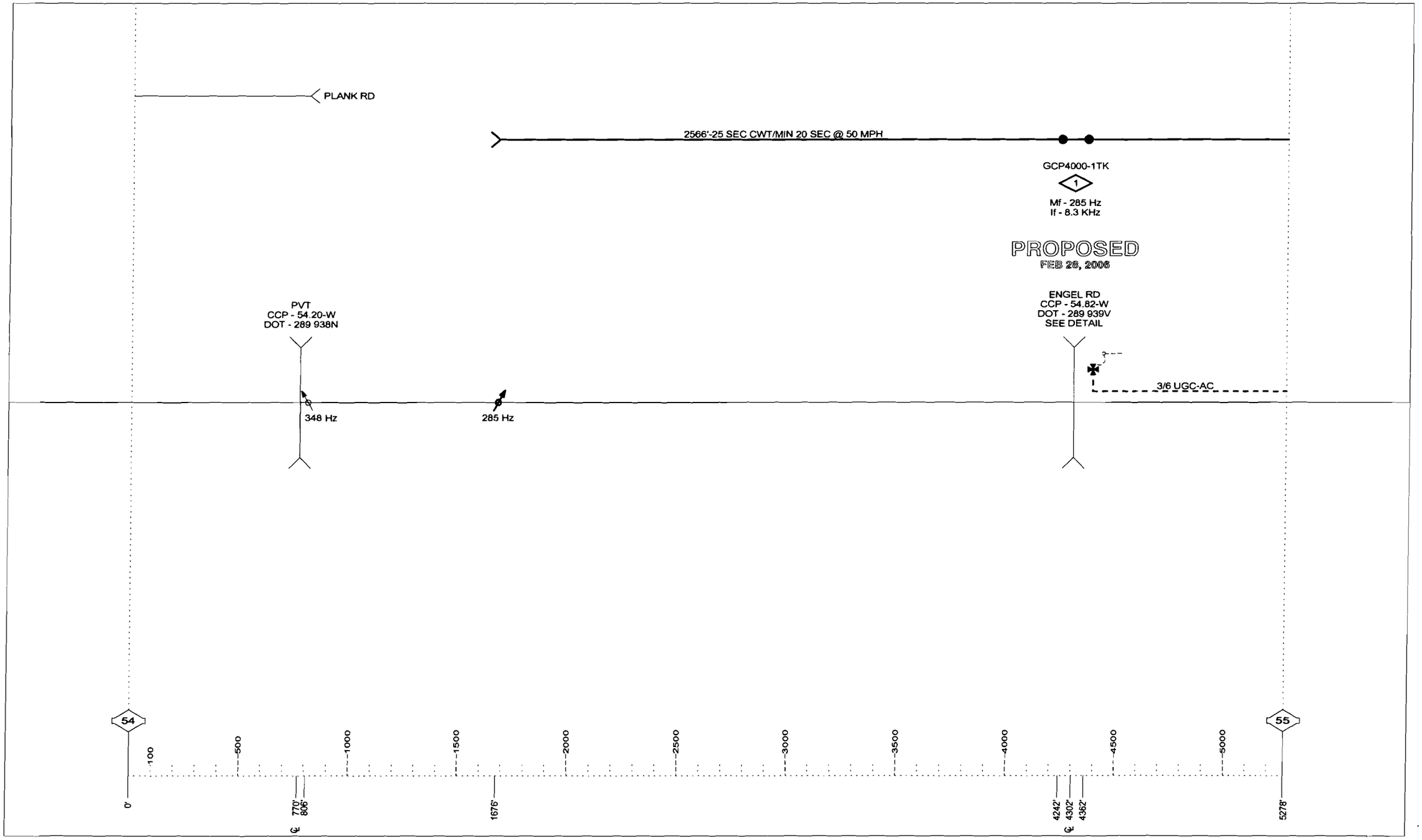

SD 1015 - MP 55 TO 56

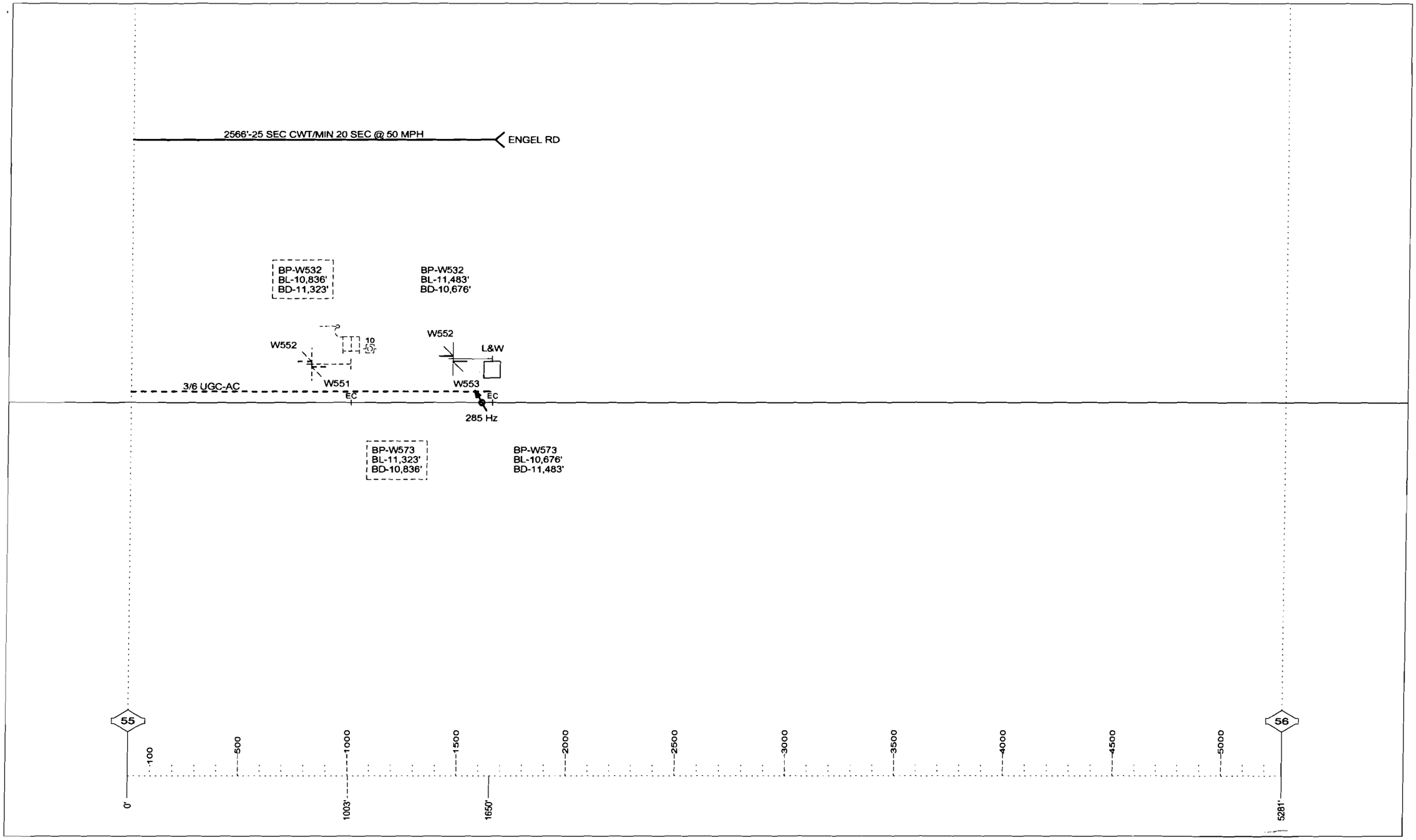

DRAWING SCALE 1" = 500'

WATERMARK

REVISIONS				
REVISIONS DESCRIPTION	BY	DATE		APP. BY
1				
2				
3				
4				
5				

Program Report

Location and SIN

DOT Number: 289939V
Milepost Number: 54.82
Site Name: ENGEL ROAD

SIN: 762010010016

MCF and Template Selection

MCF Name: GCP-T6X-02-1.mcf
MCF Revision: 021
MCFCRC: 6076E435

Template = 1A:6 Trk BI

Check Numbers

Office Check No. (DT 4.6.0): 0D05F093
Office Check Number: 0D05F093
Config. Check Number: 082C3AD9
(Based on MCF Revision 021)

Program

BASIC: module configuration
Track 1 Slot = Track
Track 2/RIO 1 Slot = Not Used
Track 3 Slot = Not Used
Track 4 Slot = Not Used
Track 5/RIO 2 Slot = Not Used
Track 6/RIO 3 Slot = Not Used
SSCC-1 Slot = SSCC31
SSCC-2 Slot = SSCC31
SEAR Used = Yes

BASIC: MS/GCP operation
Track 1 : MS/GCP Operation = Yes

BASIC: Island operation
Track 1 : Island Used = Internal

BASIC: preemption
Preempt Logic = No

BASIC: radio Dax links
Radio DAX link A Used = No
Radio DAX link B Used = No

BASIC: Vital Comms links
Vital Comms link 1 Used = No
Vital Comms link 2 Used = No

PREDICTORS: track 1
Track 1 : Prime Used = Yes
Track 1 : Dax A Used = No
Track 1 : Dax B Used = No
Track 1 : Dax C Used = No
Track 1 : Dax D Used = No
Track 1 : Dax E Used = No
Track 1 : Dax F Used = No
Track 1 : Dax G Used = No

GCP: track 1
Track 1 : GCP Freq Category = Standard
Track 1 : GCP Frequency = 285 Hz
Track 1 : Approach Distance = 2566 ft
Track 1 : Uni/BI/Sim-Bidirni = Bidirni
Track 1 : GCP Transmit Level = High
Track 1 : Island Connection = Isl 1
Track 1 : Island Distance = 120 ft
Track 1 : Computed Distance = 9999 ft
Track 1 : Linearization Steps = 100

GCP: track 1 enhanced det
Track 1 : Inbound PS Sensitivity = High
Track 1 : Speed Limiting Used = Yes
Track 1 : Outbound False Act Lvl = Normal
Track 1 : Outbound PS Timer = 20 sec
Track 1 : Trailing Switch Logic = On
Track 1 : Post Joint Detn Time = 15 sec
Track 1 : Adv Appr Predn = No
Track 1 : Cancel Pickup Delay = This Isl

GCP: track 1 prime
Track 1 : Prime Warning Time = 25 sec
Track 1 : Prime Offset Distance = 0 ft
Track 1 : Switch MS EZ Level = 11
Track 1 : Prime MS/GCP Mode = Pred
Track 1 : Prime Pickup Delay = 30 sec
Track 1 : Prime UAX = Not Used

GCP: track 1 pos start
Track 1 : Positive Start = Off
Track 1 : Sudden Shnt Det Used = No
Track 1 : Low EZ Detection Used = No

GCP: track 1 MS Control
Track 1 : MS/GCP CtrlIP Used = No
Track 1 : MS Sensitivity Level = 0
Track 1 : Compensation Level = 1300
Track 1 : Warn Time-Ballast Comp = High
Track 1 : Low EX Adjustment = 39
Track 1 : Bidirn Dax Passthru = No
Track 1 : False Act on Train Stop = No
Track 1 : EX Limiting Used = Yes
Track 1 : EZ Correction Used = Yes

ISLAND: track 1
Track 1 : IslFrequency = 8.3 kHz
Track 1 : Pickup Delay (2s +) = 0 sec
Track 1 : IslEnable IP Used = No

AND: track Anding
AND 1 XR Used = Yes
AND 2 Used = No
AND 3 Used = No
AND 4 Used = No
AND 5 Used = No
AND 6 Used = No
AND 7 Used = No
AND 8 Used = No

AND: AND 1 XR
AND 1 XR Track 1 = Prime
AND 1 Enable Used = Yes
And 1 Enable Pickup = 0 sec
AND 1 Enable Drop = 0 sec
AND 1 Wrap Used = No

ADVANCED: MS restart
MS/GCP Restart Used = No

ADVANCED: out of service
OOS Control = OOS IPs

ADVANCED: out of service 2
T1 OOS Control = OOS Input 1
T1 OOS Controls = GCP and Island

ADVANCED: track wrap circuits
Wrap LOS Timer = 5 sec
Track 1 Wrap Used = No

ADVANCED: trk 1 overrides
Track 1 : All Predictors Override Used = No

ADVANCED: OR logic
OR 1 Used = No
OR 2 Used = No
OR 3 Used = No
OR 4 Used = No

ADVANCED: Internal I/O 1
Pass Thrus = No
Int.1 Sets = Not Used
Int.1 Set by = Not Used
Int.2 Sets = Not Used
Int.2 Set by = Not Used
Int.3 Sets = Not Used
Int.3 Set by = Not Used
Int.4 Sets = Not Used
Int.4 Set by = Not Used

ADVANCED: Internal I/O 2
Int.5 Sets = Not Used
Int.5 Set by = Not Used
Int.6 Sets = Not Used
Int.6 Set by = Not Used
Int.7 Sets = Not Used
Int.7 Set by = Not Used
Int.8 Sets = Not Used
Int.8 Set by = Not Used

ADVANCED: Internal I/O 3
Int.9 Sets = Not Used
Int.9 Set by = Not Used
Int.10 Sets = Not Used
Int.10 Set by = Not Used
Int.11 Sets = Not Used
Int.11 Set by = Not Used
Int.12 Sets = Not Used
Int.12 Set by = Not Used

ADVANCED: Internal I/O 4
Int.13 Sets = Not Used
Int.13 Set by = Not Used
Int.14 Sets = Not Used
Int.14 Set by = Not Used
Int.15 Sets = Not Used
Int.15 Set by = Not Used
Int.16 Sets = Not Used
Int.16 Set by = Not Used

ADVANCED: site options
Daylight Sevings = On
Units = Standard
Maint Call Rpt IP Used = No
Emergency Activate IP = No
EZ/EX Logging = Change
EZ/EX Point Change = 3

SSCC
Gates Used = Yes
SSCC1+2 GPs Coupled = Yes
Min Activation = 20 sec
Rmt Activation Cancel = 3 min
Bell On Gate Rising = No
Auto Bell On Gate Down = No
SSCCIV Controller Used = No

SSCC: 1
SSCC-1 Activation = AND 1 XR
SSCC-1 Gate Delay = 3 sec
SSCC-1 Number of GPs = 1
SSCC-1 Number of GDs = 1
SSCC 1 : Flash Rate = 60
SSCC 1 : Low Battery Detection = No
SSCC 1 : Flash Sync = master
SSCC 1 : Invert Gate Output = No
SSCC 1 : Lamp Neutral Test = Off
Aux-1 Xng Ctrl Used = No

SSCC: 2
SSCC-2 Activation = AND 1 XR
SSCC-2 Gate Delay = 3 sec
SSCC-2 Number of GPs = 0
SSCC-2 Number of GDs = 1
SSCC 2 : Flash Rate = 60
SSCC 2 : Low Battery Detection = No
SSCC 2 : Flash Sync = slave
SSCC 2 : Invert Gate Output = No
SSCC 2 : Lamp Neutral Test = Off
Aux-2 Xng Ctrl Used = No

OUTPUT: assignment page 1
OUT 1.1 = Not Used
OUT 1.2 = Not Used

INPUT: assignment page 1
IN 1.1 = Not Used
IN 1.2 = Not Used

IO: assignment SSCC
OUT GC 1 = Gate Output 1
OUT GC 2 = Gate Output 2
IN 7.1 = AND 1 XR Enable
IN 7.2 = Not Used
IN 7.3 = Not Used
IN 7.4 = GD 1.1
IN 7.5 = GP 1.1
IN 8.1 = Out Of Service IP 1
IN 8.2 = Not Used
IN 8.3 = Not Used
IN 8.4 = GD 2.1
IN 8.5 = Not Used

SEAR
SEAR Subnode = 99
DI 1 = General
DI 2 = Gnd Flt Tester 1
Rly 1 = Ground Fault Test
Rly 2 = AC Control

SEAR: inputs
SP 2.1 = POK 1
SP 3.1 = Not Used
SP 4.1 = Not Used
SP 5.1 = Not Used
SP 6.1 = Not Used

SEAR: slot 1-4 inputs
IN 1.1 = Not Used
IN 1.2 = Not Used
IN 2.1 = Not Used
IN 2.2 = POK 2
IN 3.1 = Not Used
IN 3.2 = Not Used
IN 4.1 = Not Used
IN 4.2 = Not Used

SEAR: inputs slot 5
IN 5.1 = Not Used
IN 5.2 = Not Used

SEAR: inputs slot 6
IN 6.1 = Not Used
IN 6.2 = Not Used

SEAR: slot 7-8 inputs
IN 7.2 = Not Used
IN 7.3 = TSS 1
IN 8.2 = Not Used
IN 8.3 = TSS 2
IN 8.5 = General2

SITE: programming
Radio Subnode = 1
Field Password = Off
Low Battery Enabled = Off

Configuration Package File

Filename: 289939V.pac

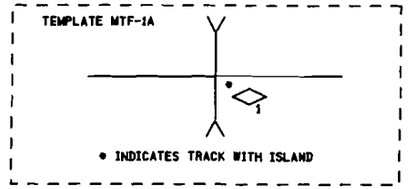

NOTES:

1) DISTANCE(S) TO BE VERIFIED AT INSTALLATION.
INDICATE SELECTED PROGRAMMED VALUE IF DIFFERENT THAN SHOWN.
REFER TO 4000 GCP INSTRUCTION/INSTALLATION MANUAL
FOR PROGRAMMING PARAMETERS.

2) PROGRAM TEXT HIGHLITED IN RED INDICATES 4000 PROGRAM
MODIFICATIONS TO DEFAULT PROGRAM VALUES.

3) EACH CONSTANT WARNING DEVICE SYSTEM TO BE PROGRAMMED TO
CONVERT TO A MOTION SENSOR 300 FEET FROM EDGE OF ROAD
TRAVELLED WAY.
SHUNT TRACK 300 FEET FROM EDGE OF ROAD TRAVELLED WAY
AND NOTE "EZ" VALUE.
PROGRAM EACH SYSTEM WITH THE INDICATED "EZ" VALUE +2.

4) VERIFY SET TIMER VALUE TO MATCH ACTUAL TRAIN MOVEMENT
WITHIN THE CROSSING APPROACH CIRCUITS.

PROPOSED
DES. No. _____
RED-IN YELLOW-OUT
AS INSTALLED
DATE _____
BY _____

PROPOSED D	M	Y	REVISIONS	D	C	COMPLETED D	M	Y	C

REGION SOUTHERN
SUB. FREEPORT 362
CN

SIGNALS AND COMMUNICATIONS HOMEWOOD
28 OCTOBER 2006
DES. PEA
CH. PWW

GCP 4000
PROGRAM INFORMATION
ENGEL ROAD
BURLINGTON, IL

FR-054, 82-13

SAFETRAN SYSTEM CORP.
LOUISVILLE DIVISION, LOUISVILLE, KY

FR-054, 82-13.DGN
21-NOV-2008

SAFETRAN SYSTEMS CORPORATION

DES. : PEA	DATE: 10/28/08	JOB NO. : PICA10159	
CKD. : PWW	ISSUE DATE: N/A	EST. NO. : N/A	
DRN. : PEA	PLAN NO. : N/A	SHEET 13 OF 15	
P TIME: 13:15	P DATE: 21-NOV-2008	CAD ID. : FR-054, 82-13	

WATERMARK

FR-054.82-01.DGN
21-NOV-2008

REVISIONS				
NO.	DATE	BY	DESCRIPTION	APP. BY
1				
2				
3				
4				
5				

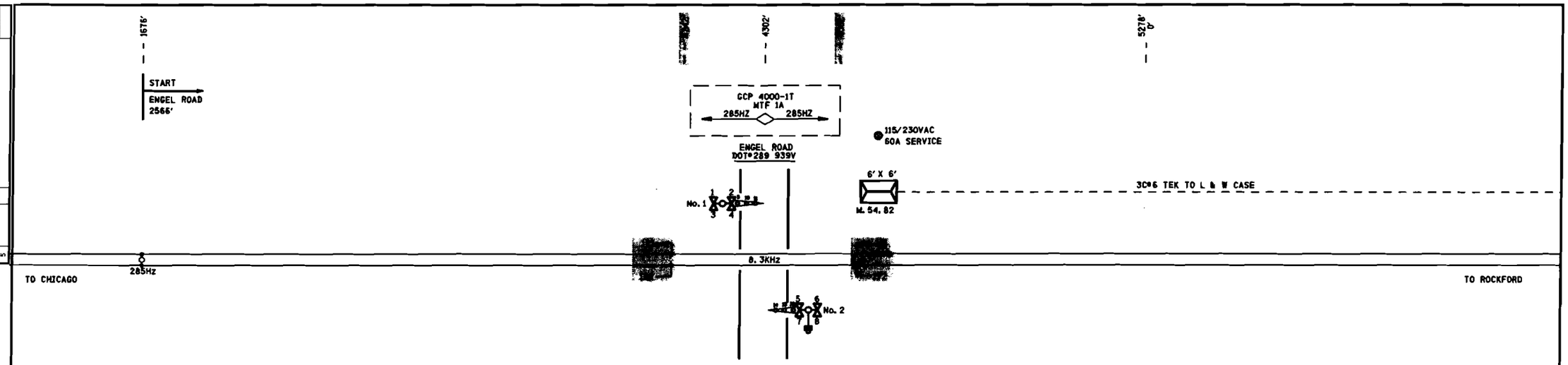

RECEIVED
DEC 12 2008
Illinois Commerce Commission
RAIL SAFETY SECTION

NOTES:

1) DENOTES MULTI-FREQ. NARROW BAND SHUNT 62775-1543.

PROPOSED
DES. No. _____
YELLOW-OUT
AS INSTALLED
DATE _____
BY _____

6' X 6' BUNGALOW

PROPOSED D	M	Y	REVISIONS	D	C	COMPLETED D	M	Y	C

REGION SOUTHERN
SUB. FREEPORT 382
SIGNALS AND COMMUNICATIONS HOMEWOOD
DES. PEA
28 OCTOBER 2008
CH. PWW
TRACK LAYOUT
ENGEL ROAD
BURLINGTON, IL
FR-054.82-01
15
SAFETRAN SYSTEM CORP.
LOUISVILLE DIVISION, LOUISVILLE, KY

SAFETRAN SYSTEMS CORPORATION

DES.: PEA	DATE: 10/28/08	JOB NO.: PICA10159	
CKD.: PWW	ISSUE DATE: N/A	EST. NO. N/A	
DRN.: PEA	PLAN NO. N/A	SHEET 1 OF 15	
P TIME: 13:14	P DATE: 21-NOV-2008	CAD ID.: FR-054.82-01	

WATERMARK

FR-054.82-02.DGN
21-NOV-2008

NO.	DATE	BY	DESCRIPTION	APP.	BY
1					
2					
3					
4					
5					

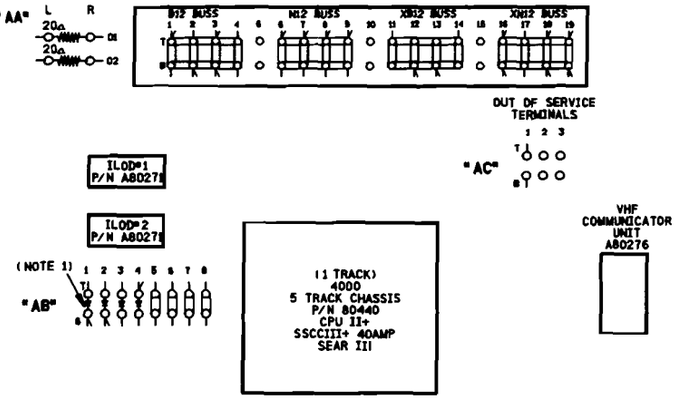

NOTE:

1) ⊸ DENOTES RECTIFIER : (SAFETRAN# 8008A299006)

SIDE "A"

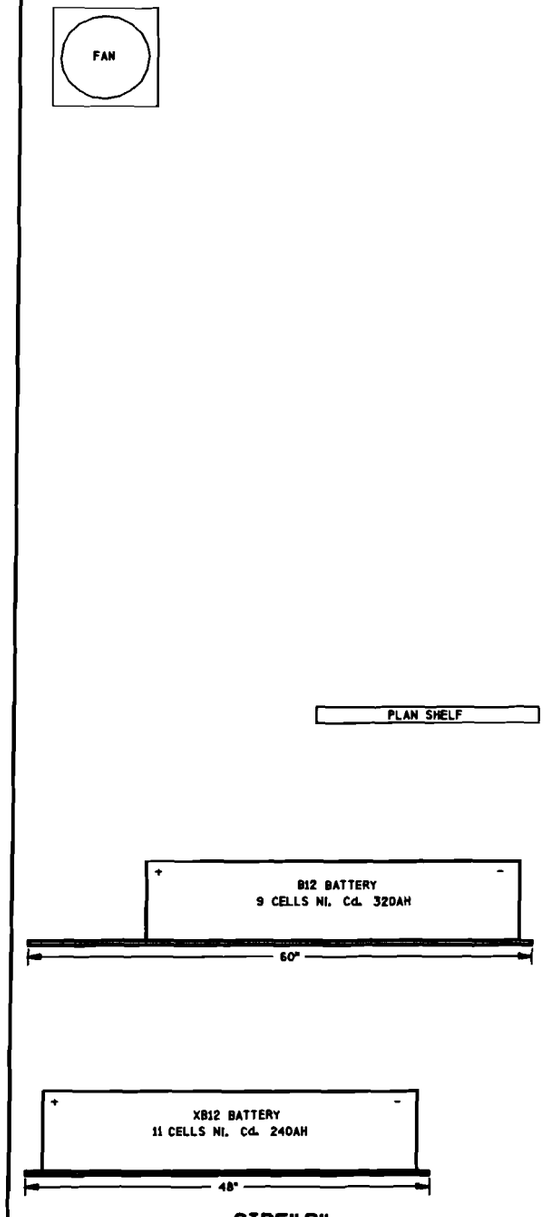

SIDE "B"

PROPOSED
DES. No. _____
RED-IN YELLOW-OUT
AS INSTALLED
DATE _____
BY _____

6' X 6' BUNGALOW

PROPOSED D	M	Y	REVISIONS	D	C	COMPLETED D	M	Y	C

REGION SOUTHERN
SUB. FREEPORT 382
CN

SIGNALS AND COMMUNICATIONS HOMEWOOD	DES. PEA
28 OCTOBER 2008	CH. PWW

BUNGALOW LAYOUT
SIDE "A" & "B"
ENGEL ROAD
BURLINGTON, IL

FR-054.82-02

SAFETRAN SYSTEM CORP.
LOUISVILLE DIVISION, LOUISVILLE, KY

SAFETRAN SYSTEMS CORPORATION

DES.: PEA	DATE: 10/28/08	JOB NO.: P1CA10159	
CKD.: PWW	ISSUE DATE: N/A	EST. NO.: N/A	
DRN.: PEA	PLAN NO.: N/A	SHEET 2 OF 15	
P TIME: 13:14	P DATE: 21-NOV-2008	CAD ID.: FR-054.82-02	

WATERMARK

FR-054.82-03.DGN
21-NOV-2008

NO.	DATE	BY	DESCRIPTION	APP. BY
1				
2				
3				
4				
5				

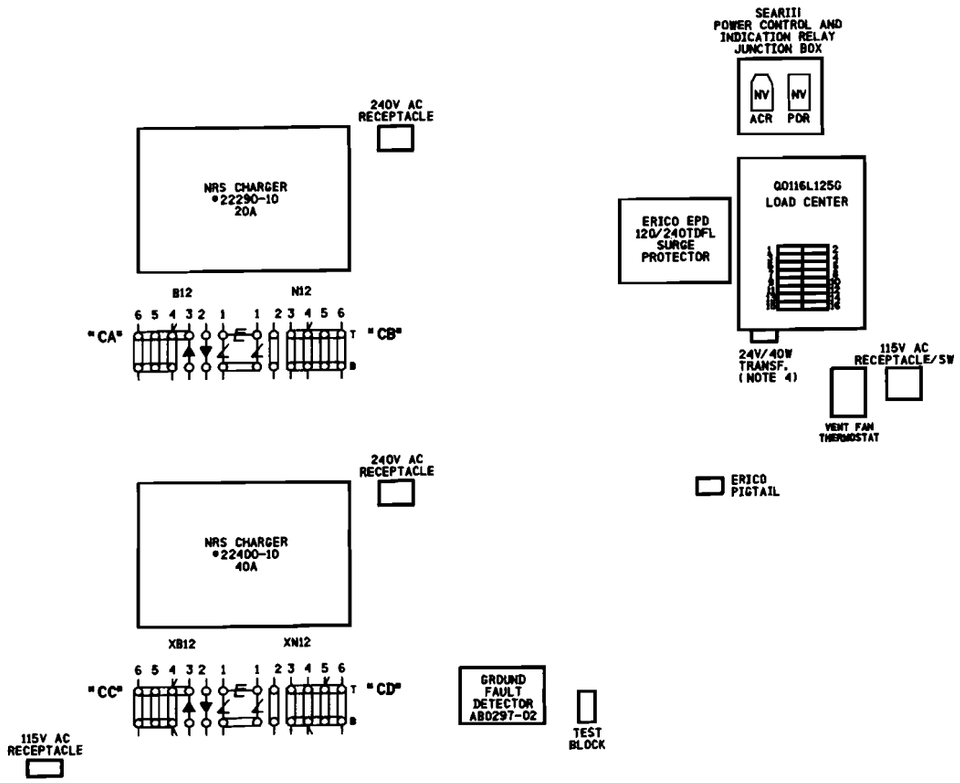

NOTES:

1) ⋕ DENOTES EQUALIZER TYPE:(SAFETRAN #022700-1X)
2) ⊸ DENOTES LIGHTNING ARRESTER TYPE:(SAFETRAN #022585-1X)
3) SURGE PROTECTION SHOULD BE BONDED TO BUNGALOW.
4) 24V-40W TRANSFORMER (CN STOCK #02-45-367)

SIDE "C"

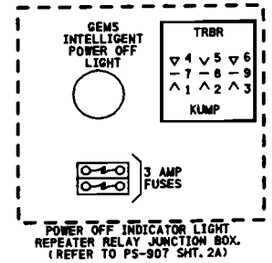

SIDE "D"
ABOVE ENTRY DOOR

PROPOSED
DES. No. _____
RED-IN YELLOW-OUT
AS INSTALLED
DATE _____
BY _____

6' X 6' BUNGALOW

PROPOSED D	M	Y	REVISIONS	D	C	COMPLETED D	M	Y	C

REGION SOUTHERN
SUB. FREEPORT 382
CN

SIGNALS AND COMMUNICATIONS HOMEWOOD | DES. PEA
28 OCTOBER 2008 | CH. PWW

BUNGALOW LAYOUT
SIDE "C" & OVER DOOR SIDE "D"
ENGEL ROAD
BURLINGTON, IL

FR-054.82-03

SAFETRAN SYSTEM CORP.
LOUISVILLE DIVISION, LOUISVILLE, KY

SAFETRAN SYSTEMS CORPORATION	
DES.: PEA	DATE: 10/28/08
CKD.: PWW	ISSUE DATE: N/A
DRN.: PEA	PLAN NO.: N/A
P TIME: 13:14	P DATE: 21-NOV-2008
JOB NO.: PICA10159	
EST. NO.: N/A	
SHEET 3 OF 15	
CAD ID.: FR-054.82-03	

WATERMARK

FR-054. 82-04. DGN
21-NOV-2008

NO.	DATE	BY	DESCRIPTION	APP. BY
1				
2				
3				
4				
5				

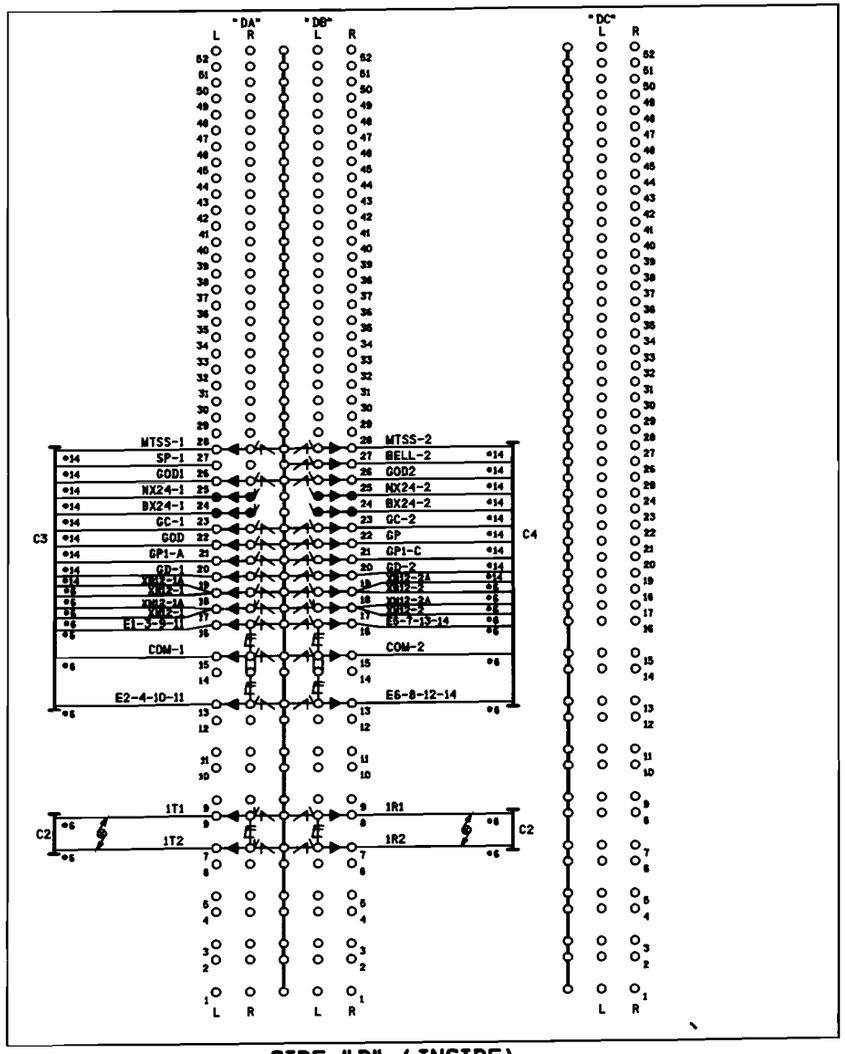

SIDE "D" (INSIDE)

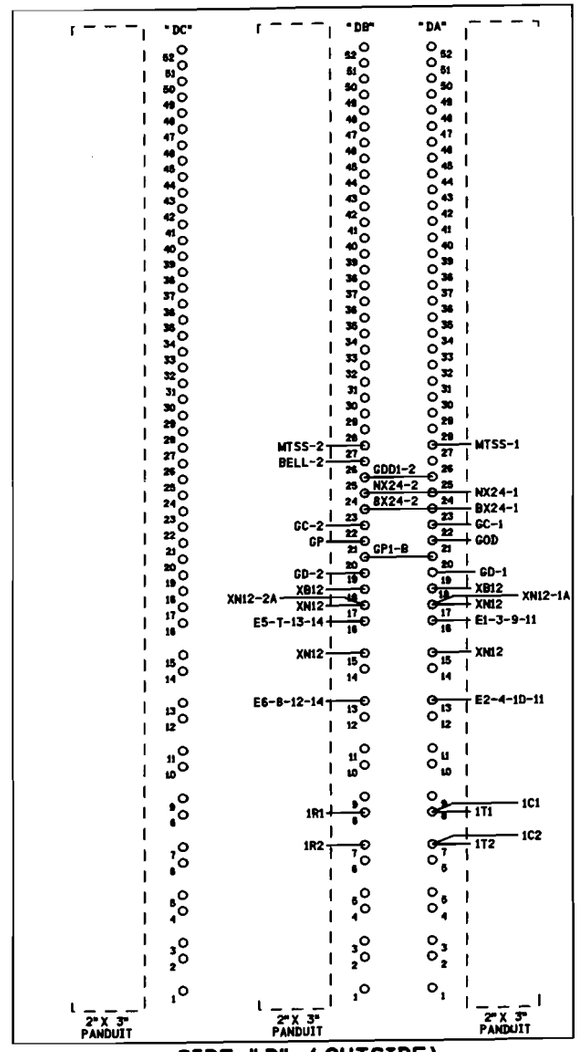

SIDE "D" (OUTSIDE)

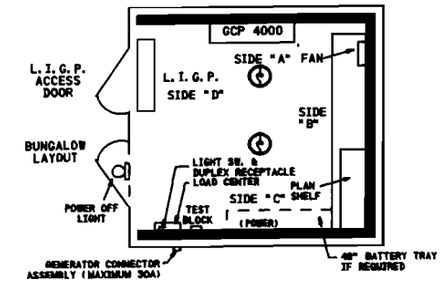

ROOF MOUNTED AC/HEATING UNIT

CABLE CONSIST:

C1-3C*6 U/G TO SIGNAL CASE
C2-(2)-25C*6 TW. TO TRACK
C3-16C (7*6, 9*14) TO GATE (SIG.#1)
C4-16C (7*6, 9*14) TO GATE (SIG.#2)

NOTES:

1) DENOTES LIGHTNING ARRESTER TYPE:(SAFETRAN #022585-1X)
2) DENOTES EQUALIZER TYPE:(SAFETRAN #022700-1X)
3) DENOTES TWISTED PAIR.
4) ENSURE DOUBLE NUTTING OF ALL TERMINALS.
5) DENOTES INSULATED TERMINAL

PROPOSED
DES. No. _____
RED-IN YELLOW-OUT
AS INSTALLED
DATE _____
BY _____

6' X 6' BUNGALOW

PROPOSED D	M	Y	REVISIONS	D	C	COMPLETED D	M	Y	C

REGION SOUTHERN
SUB. FREEPORT 382
CN
SIGNALS AND COMMUNICATIONS HOMEWOOD
DES. PEA
28 OCTOBER 2008
CH. PWW
BUNGALOW LAYOUT SIDE "D"
LOW IMPEDANCE GROUND PLANE
ENGEL ROAD
BURLINGTON, IL
FR-054. 82-04

SAFETRAN SYSTEM CORP.
LOUISVILLE DIVISION, LOUISVILLE, KY

SAFETRAN SYSTEMS CORPORATION		
DES. : PEA	DATE: 10/28/08	JOB NO. : PICA10159
CKD. : PWW	ISSUE DATE: N/A	EST. NO. : N/A
DRW. : PEA	PLAN NO. : N/A	SHEET 4 OF 15
P TIME: 13:14	P DATE: 21-NOV-2008	CAD ID. : FR-054. 82-04

WATERMARK

FR-054.82-05.DGN
21-NOV-2008

REV. NO.	DATE	BY	DESCRIPTION	APP. BY
1				
2				
3				
4				
5				

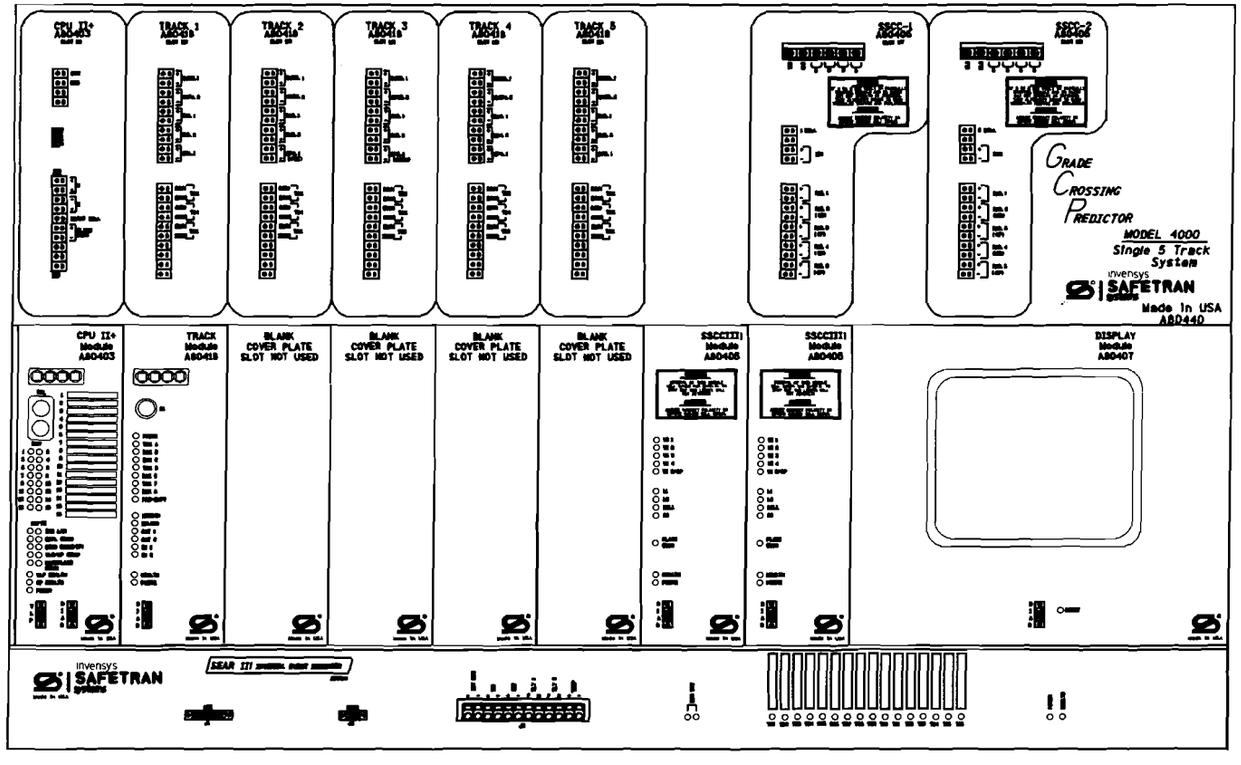

NOTE:

1) DISABLE THE DISPLAY HEATER BY REMOVING JUMPER J-22 (LOCATED AT THE EDGE OF THE DISPLAY MODULE CARD THAT PLUGS INTO THE CHASSIS).

ATTENTION!

ENSURE THE DISPLAY MODULE HEATER IS DISABLED, LEAVING THE DISPLAY HEATER ENABLE WILL REDUCE THE AMOUNT OF BATTERY STANDBY TIME IN THE EVENT OF AN AC POWER FAILURE.

HEATER FUNCTION IS
JUMPER SELECTABLE ON
THE DISPLAY MODULE BOARD.
THREE OPTIONS ARE AVAILABLE.
NORMAL LCD HTR (DEFAULT)
HI CURRENT
NO JUMPER (HEATER DISABLED)

PROPOSED
DES. No. _____
RED-IN YELLOW-OUT
AS INSTALLED
DATE _____
BY _____

6' X 6' BUNGALOW

PROPOSED D	M	Y	REVISIONS	D	C	COMPLETED D	M	Y	C

REGION SOUTHERN
SUB. FREEPORT 382
CN

SIGNALS AND COMMUNICATIONS HOMEWOOD | DES. PEA
28 OCTOBER 2008 | CH. PWW

GCP 4000
5 TRK CHASSIS & MODULE LAYOUT
ENGEL ROAD
BURLINGTON, IL

FR-054.82-05

SAFETRAN SYSTEM CORP.
LOUISVILLE DIVISION, LOUISVILLE, KY

SAFETRAN SYSTEMS CORPORATION

DES. : PEA	DATE: 10/28/08	JOB NO. : PICA10159	
CKD. : PWW	ISSUE DATE: N/A	EST. NO. : N/A	
DRN. : PEA	PLAN NO. : N/A	SHEET 5 OF 15	
P TIME: 13:14	P DATE: 21-NOV-2008	CAD ID. : FR-054.82-05	

WATERMARK

FR-054, 82-06, DGN
21-NOV-2008

NO.	DATE	BY	DESCRIPTION	APP. BY
1				
2				
3				
4				
5				

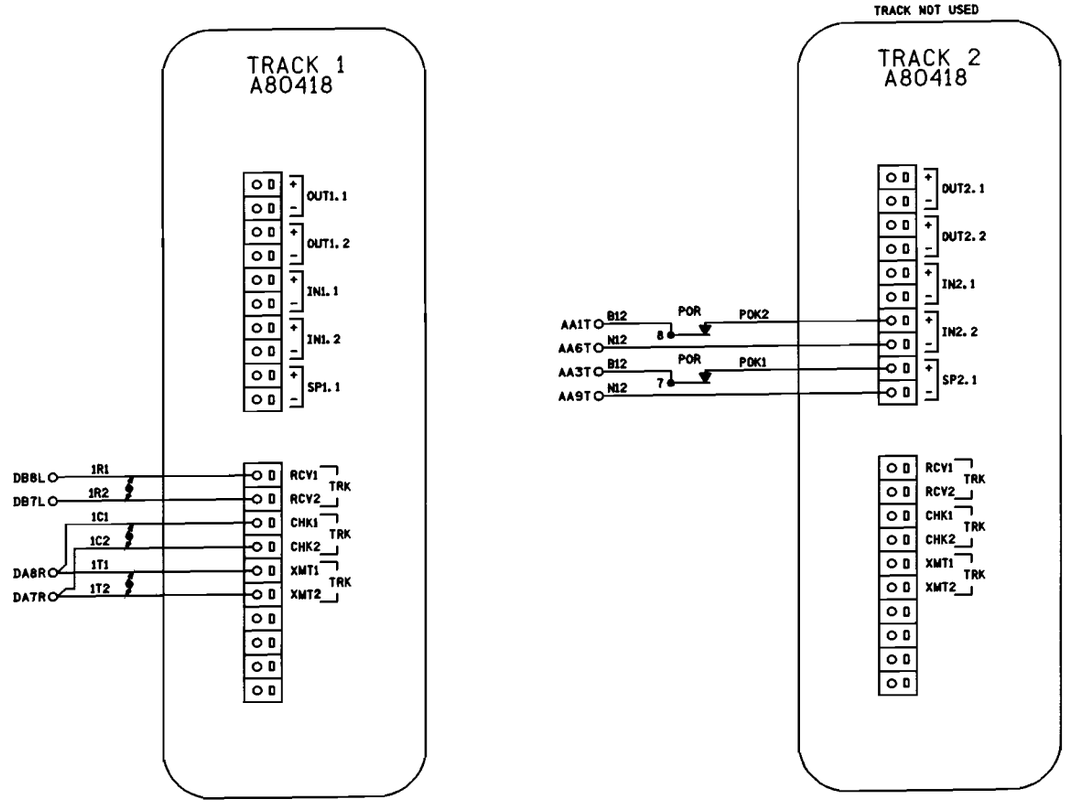

NOTES:

1) ALL WIRING #16 AWG UNLESS OTHERWISE NOTED.

2) DENOTES TWISTED PAIR.

PROPOSED
DES. No. _____
RED-IN YELLOW-OUT
AS INSTALLED
DATE _____
BY _____

6' X 6' BUNGALOW

PROPOSED D	M	Y	REVISIONS	D	C	COMPLETED D	M	Y	C

REGION SOUTHERN
SUB. FREEPORT 382

SIGNALS AND COMMUNICATIONS HOMEWOOD | DES. PEA
28 OCTOBER 2008 | CH. PWW

GCP 4000
TRACKS 1 & 2 CONNECTIONS
ENGEL ROAD
BURLINGTON, IL

FR-054. 82-06

SAFETRAN SYSTEM CORP.
LOUISVILLE DIVISION, LOUISVILLE, KY

SAFETRAN SYSTEMS CORPORATION	
DES. : PEA	DATE: 10/28/08
CKD. : PWW	ISSUE DATE: N/A
DRN. : PEA	PLAN NO. :N/A
P TIME:13:14	P DATE: 21-NOV-2008
JOB NO. : PICA10159	
EST. NO. :N/A	
SHEET 6 OF 15	
CAD ID. :FR-054. 82-06	

WATERMARK

FR-054. 82-07. DGH
21-NOV-2008

NO.	DATE	BY	REVISIONS DESCRIPTION	APP. BY
1				
2				
3				
4				
5				

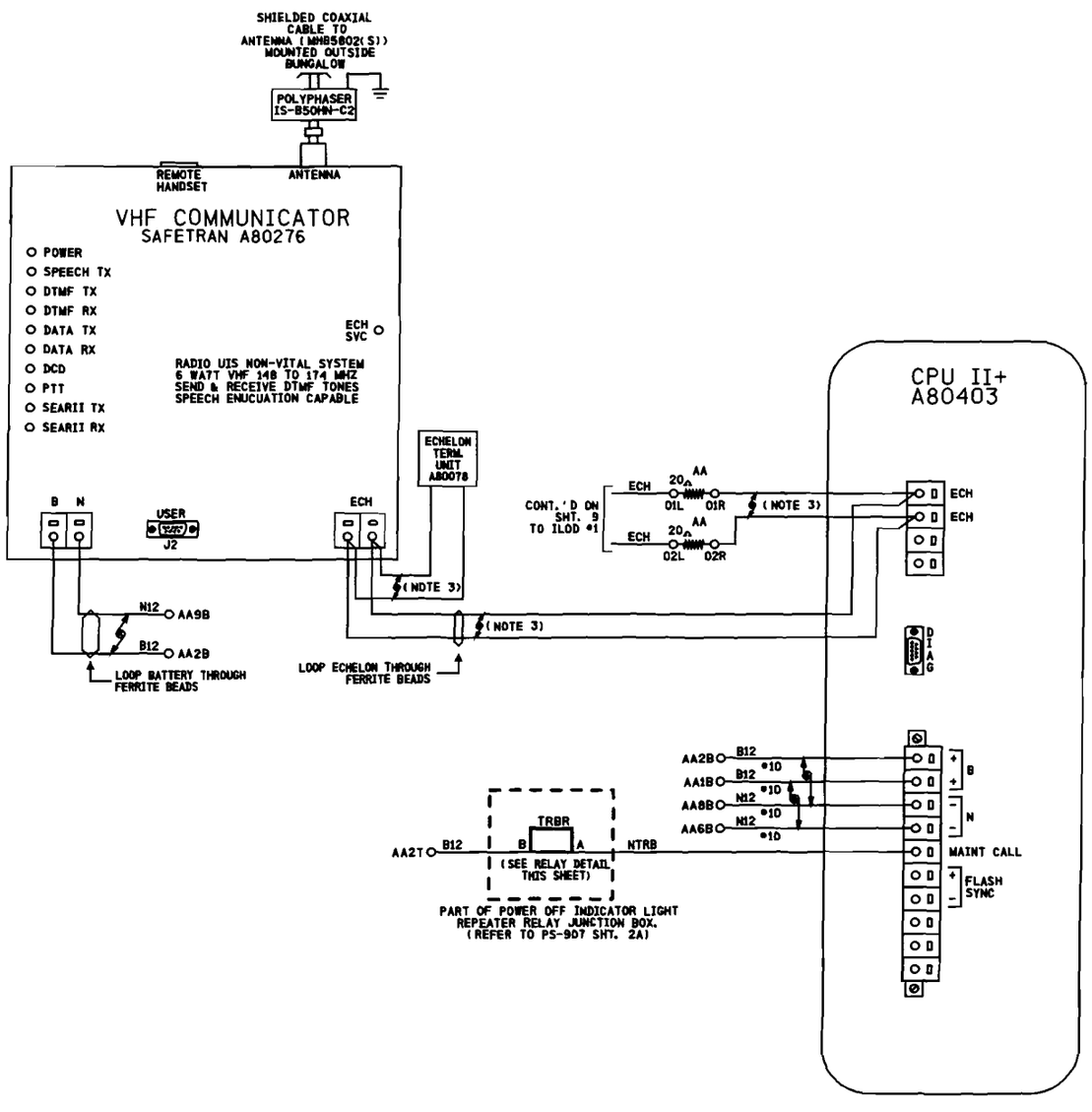

RELAY DETAIL

RELAY - POTTER & BRUMFIELD
MODEL KUMP-14D18-12 SOCKET MOUNTABLE
12 VDC W/ 3 FORM C CONTACTS.

SOCKET - SCREW TERMINAL
MODEL 27E121.

RELAY WIRING DIAGRAM (REAR VIEW)

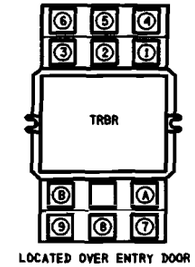

LOCATED OVER ENTRY DOOR

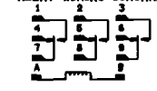

NOTE:
SOCKET NUMBERING CORRESPONDS DIRECTLY WITH RELAY NUMBERING. (COIL SHOWN ENERGIZED)

NOTES:
1) ALL WIRING #16 AWG UNLESS OTHERWISE NOTED.
2) DENOTES TWISTED PAIR.
3) USE BELDEN CABLE, PART #8461-1500-60 FOR ALL ECHELON AND LAN WIRING.

PROPOSED
DES. No. _____
RED-IN YELLOW-OUT
AS INSTALLED
DATE _____
BY _____

6' X 6' BUNGALOW

PROPOSED D	M	Y	REVISIONS	D	C	COMPLETED D	M	Y	C

REGION SOUTHERN
SUB. FREEPORT 382

SIGNALS AND COMMUNICATIONS HOMEWOOD — DES. PEA
28 OCTOBER 2008 — CH. PWW

GCP 4000
CPUII+ & VHF COMMUNICATOR
ENGEL ROAD
BURLINGTON, IL

FR-054. 82-07

SAFETRAN SYSTEM CORP.
LOUISVILLE DIVISION, LOUISVILLE, KY

SAFETRAN SYSTEMS CORPORATION

DES.: PEA	DATE: 10/28/08	JOB NO.: PICA10159
CKD.: PWW	ISSUE DATE: N/A	EST. NO.: N/A
DRN.: PEA	PLAN NO.: N/A	SHEET 7 OF 15
P. TIME: 13:14	P. DATE: 21-NOV-2008	CAD ID.: FR-054. 82-07

WATERMARK

FR-054.82-08.DGN
21-NOV-2008

REVISIONS				
NO.	DATE	BY	DESCRIPTION	APP. BY
1				
2				
3				
4				
5				

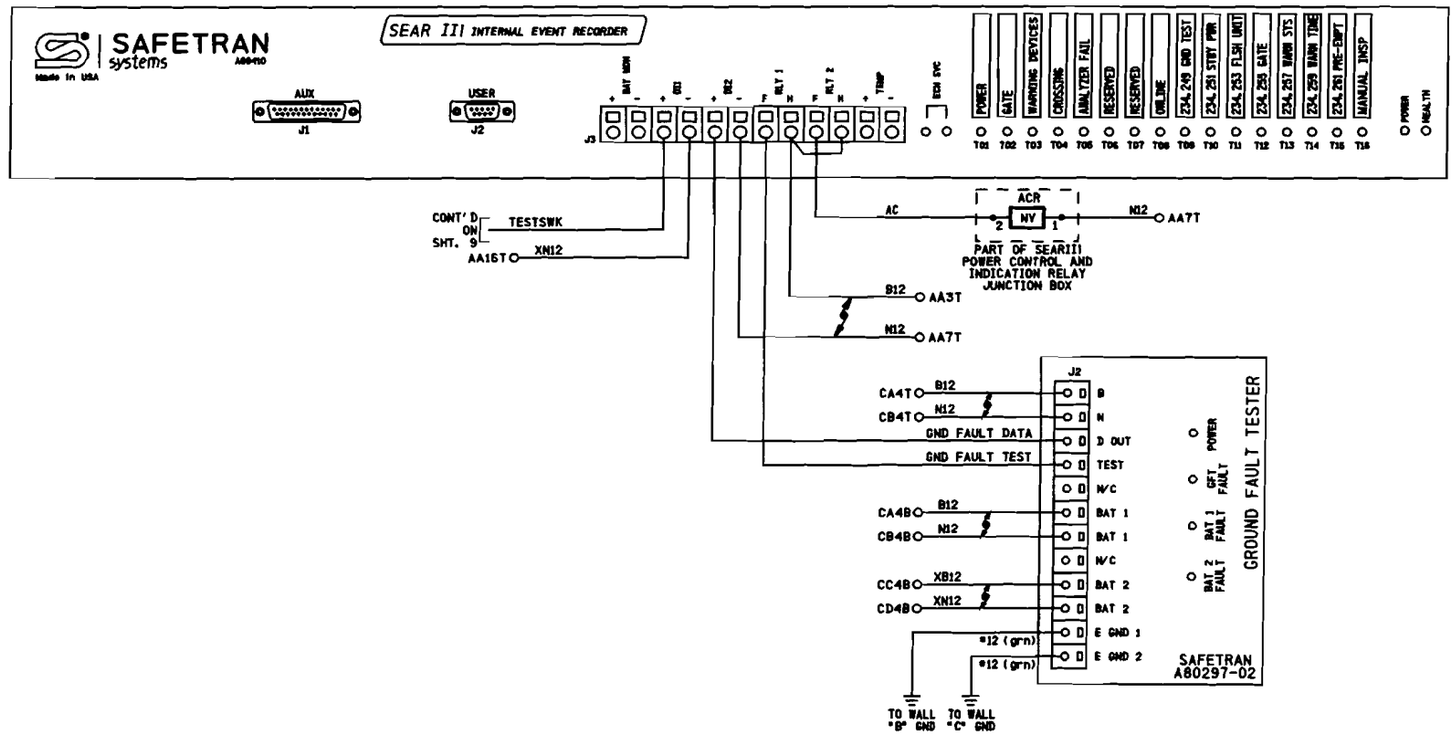

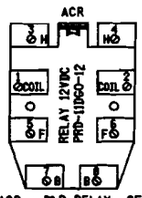

ACR - P&B RELAY, 2FB
(WITH TWO 30A CONTACTS @ 240VAC)
RELAY PART #PRD-11DGO-12

NOTES:
1) ALL WIRING #16 AWG UNLESS OTHERWISE NOTED.
2) ⚡ DENOTES TWISTED PAIR.

PROPOSED
DES. No. _____
RED-IN YELLOW-OUT
AS INSTALLED
DATE _____
BY _____

6' X 6' BUNGALOW

PROPOSED D	M	Y	REVISIONS	D	C	COMPLETED D	M	Y	C

REGION SOUTHERN
SUB. FREEPORT 382
CN
SIGNALS AND COMMUNICATIONS HOMEWOOD
DES. PEA
28 OCTOBER 2008
CH. PWW
GCP 4000/SEAR III
INTERNAL EVENT ANALYZER WITH GFT
ENGEL ROAD
BURLINGTON, IL
FR-054.82-08

SAFETRAN SYSTEM CORP.
LOUISVILLE DIVISION, LOUISVILLE, KY

SAFETRAN SYSTEMS CORPORATION		
DES.: PEA	DATE: 10/28/08	JOB NO.: PICA10159
CKD.: PWW	ISSUE DATE: N/A	EST. NO.: N/A
DRN.: PEA	PLAN NO.: N/A	SHEET 8 OF 15
P TIME: 13:14	P DATE: 21-NOV-2008	CAD ID.: FR-054.82-08

WATERMARK

FR-054, 82-09, DGN
21-NOV-2008

REVISIONS				
NO.	DATE	BY	DESCRIPTION	APP. BY
1				
2				
3				
4				
5				

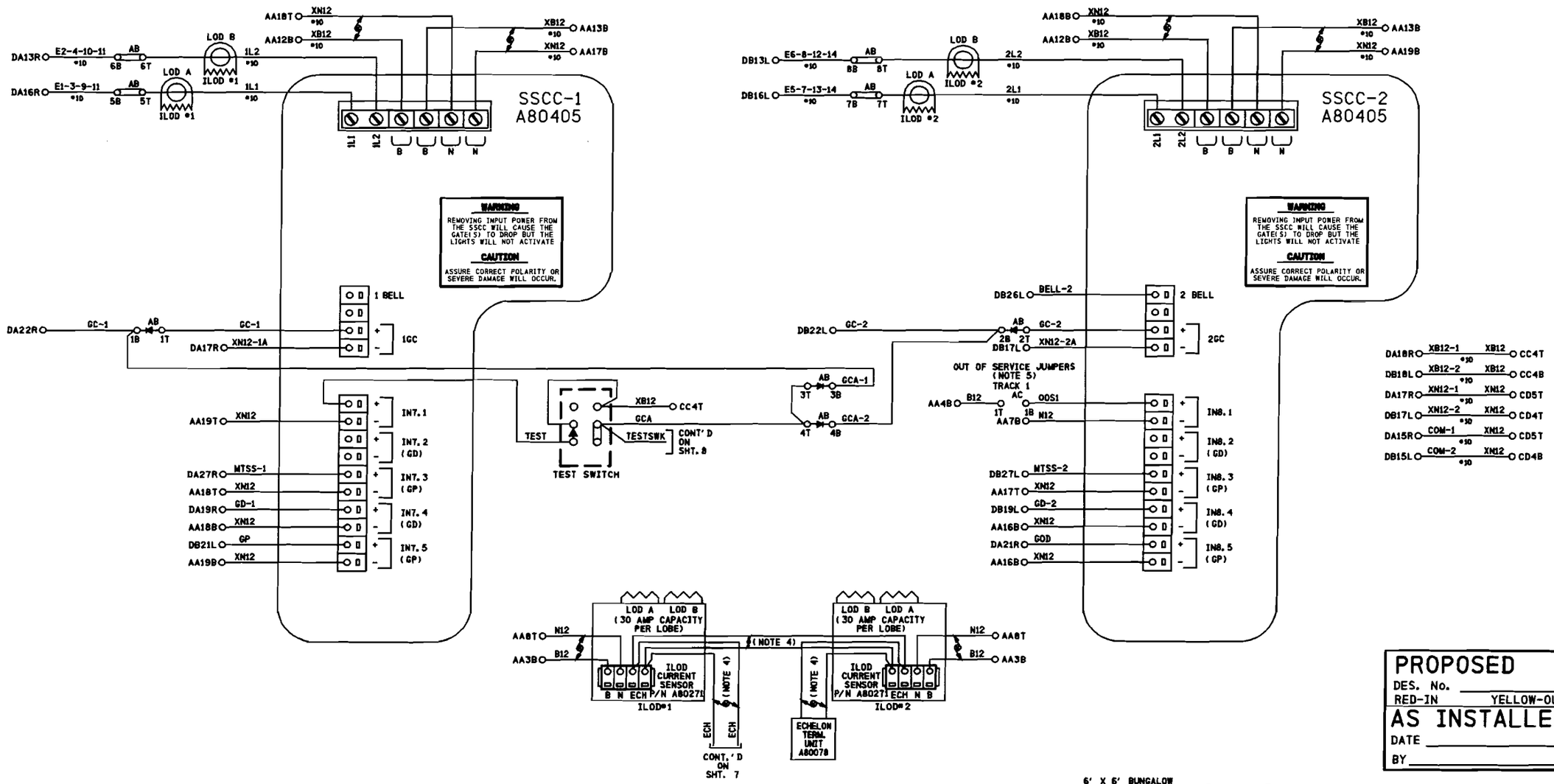

NOTES:

1) DENOTES RECTIFIER : (SAFETRAN #8008A299006)

2) DENOTES TWISTED PAIR.

3) ALL WIRING TO BE #16 AWG MINIMUM UNLESS OTHERWISE NOTED.

4) USE BELDEN CABLE, PART #8461-u500-60 FOR ALL ECHELON AND LAN WIRING.

5) TO TAKE TRACK 1 (T1) OUT OF SERVICE, JUMPER AC1T TO AC1B

PROPOSED
DES. No. _____
RED-IN YELLOW-OUT
AS INSTALLED
DATE _____
BY _____

6' X 6' BUNGALOW

PROPOSED D	M	Y	REVISIONS	D	C	COMPLETED D	M	Y	C

REGION SOUTHERN
SUB. FREEPORT 382

SIGNALS AND COMMUNICATIONS HOMEWOOD — DES. PEA
28 OCTOBER 2008 — CH. PWW

GCP 4000/SSCCIII
2-20 AMP CONTROLLERS W/ 2 ILODS
ENGEL ROAD
BURLINGTON, IL

FR-054. 82-09

SAFETRAN SYSTEM CORP.
LOUISVILLE DIVISION, LOUISVILLE, KY

SAFETRAN SYSTEMS CORPORATION

DES.: PEA	DATE: 10/28/08	JOB NO.: PTCA10159
CKD.: PWW	ISSUE DATE: N/A	EST. NO.: IN/A
DRN.: PEA	PLAN NO.: IN/A	SHEET 9 OF 15
P TIME: 13:15	P DATE: 21-NOV-2008	CAD ID.: FR-054. 82-09

WATERMARK

FR-054. 82-10. DGN
21-NOV-2008

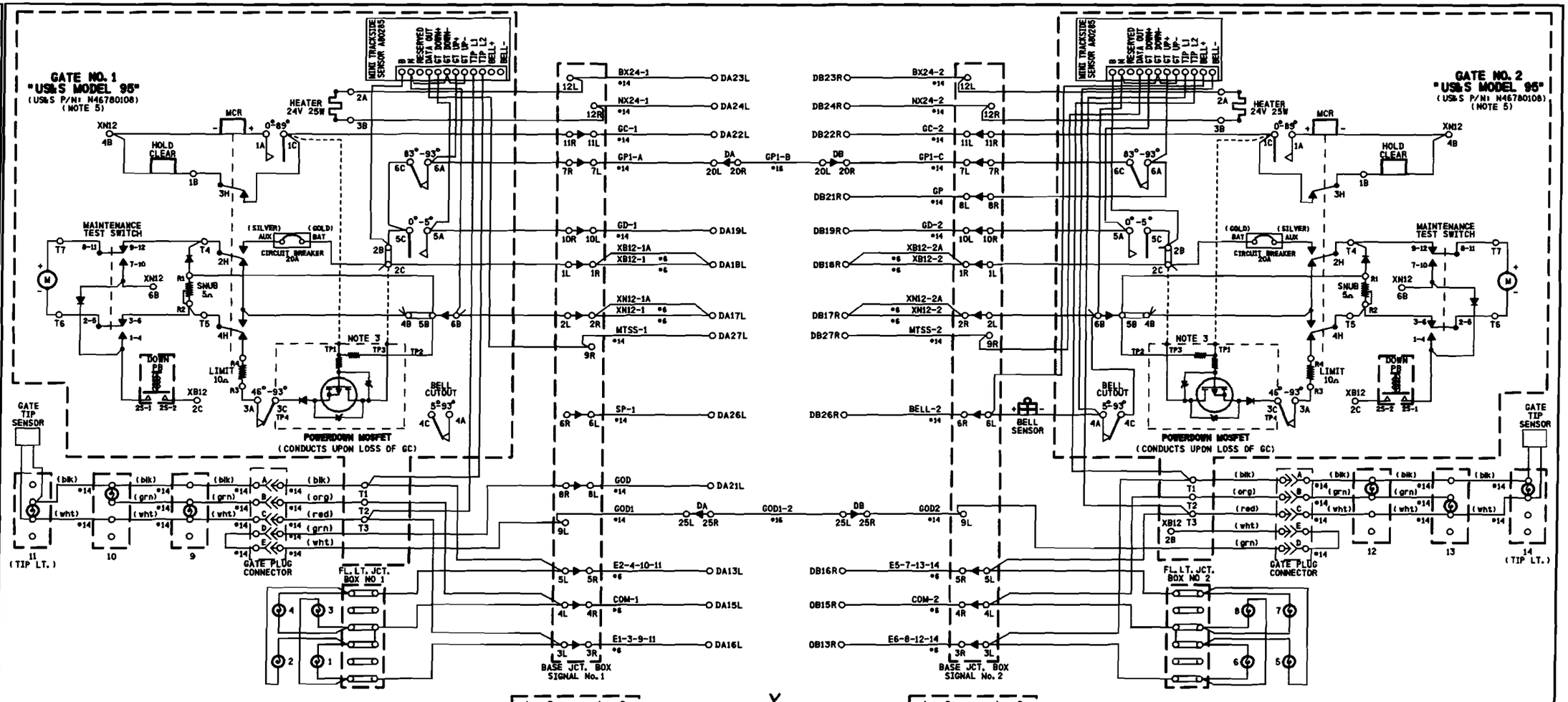

NOTES:

1) ON GATE No. 1 ADD STRAP BETWEEN TERMINAL 2B & 2C, ADD JUMPER BETWEEN TERMINAL 2B & 5C, BETWEEN TERMINAL 5C & 6C
2) ON GATE No. 2 ADD STRAP BETWEEN TERMINAL 2B & 2C ADD JUMPER BETWEEN TERMINAL 2B & 5C AND CONNECT GP AS SHOWN
3) POWERDOWN PCB TERMINALS TP1, TP3 & TP4 FIT OVER TERMINALS 1C, 2C & 3C RESPECTIVELY
4) ALL WIRING #10 AWG MINIMUM UNLESS OTHERWISE NOTED. WIRE SIZES SHOWN ARE MINIMUM GAUGE.
5) GATE DESCENT TIME (RELEASE FROM VERTICAL TO FULLY HORIZONTAL) TO BE WITHIN 11 SECONDS.
6) ENSURE ALL TERMINALS HAVE TWO SHOULDER NUTS.
7) FOR GATE(S) THAT HAS BELL, ADD JUMPER BETWEEN 4C AND 5B.

PROPOSED
DES. No. _____
RED-IN YELLOW-OUT
AS INSTALLED
DATE _____
BY _____

SAFETRAN SYSTEMS CORPORATION		
DES. : PEA	DATE: 10/28/08	JOB NO. : PICA0159
CKD. : PWW	ISSUE DATE: N/A	EST. NO. : N/A
DRN. : PEA	PLAN NO. : N/A	SHEET 10 OF 15
P TIME: 13:15	P DATE: 21-NOV-2008	CAD ID. : FR-054. 82-10

NO.	DATE	BY	REVISIONS DESCRIPTION	APP. BY
1				
2				
3				
4				
5				

6' X 6' BUNGALOW

PROPOSED			REVISIONS	D	C	COMPLETED			C
D	M	Y				D	M	Y	

REGION SOUTHERN
SUB. FREEPORT 382

SIGNALS AND COMMUNICATIONS HOMEWOOD — DES. PEA
28 OCTOBER 2008 — CH. PWW

GATE MECHANISM CONTROL CIRCUITS
USS MODEL 95
ENGEL ROAD
BURLINGTON, IL

FR-054. 82-10

SAFETRAN SYSTEM CORP.
LOUISVILLE DIVISION, LOUISVILLE, KY

WATERMARK

FR-054, 82-11, DGN
21-NOV-2008

NO.	DATE	BY	REVISIONS DESCRIPTION	APP. BY
1				
2				
3				
4				
5				

NOTES:

1) CIRCUIT BREAKER NOT TO EXCEED 60 AMPERES. RETAINING KIT PK4WB2LA MUST BE USED WITH 60A BREAKER.
2) FEEDER CIRCUIT BREAKER, AT STUB POLE SERVICE PANEL, NOT TO EXCEED 60 AMPERES.
3) A SWITCH TRANSFER KIT MUST BE INSTALLED BETWEEN THE SERVICE DISCONNECT BREAKER AND THE GENERATOR HOOK UP.
4) WHERE SEPARATE GROUND WIRE EXISTS BETWEEN THE SERVICE AND THE LOAD CENTER, REMOVE THE BRASS COLORED BONDING SCREW. (REFER TO SCHEMATIC ON BOX COVER FOR EXACT LOCATION)
5) S.C. #6 STRANDED, CSA TYPE R90 (X-LINK)
6) KEEP LEADS AS SHORT AS POSSIBLE
7) THE WHITE CONDUCTOR MUST BE MADE PERMANENTLY UNIDENTIFIABLE BY TAPING THIS CONDUCTOR RED. TAPING MUST BE CONTINUOUS WHERE THE SEPARATE CONDUCTORS HAVE BEEN MADE ACCESSIBLE AND VISIBLE.
8) « DENOTES WAGO TERMINAL
9) 24 VOLT - 40 WATT TRANSFORMER (CN STOCK #02-45-367)

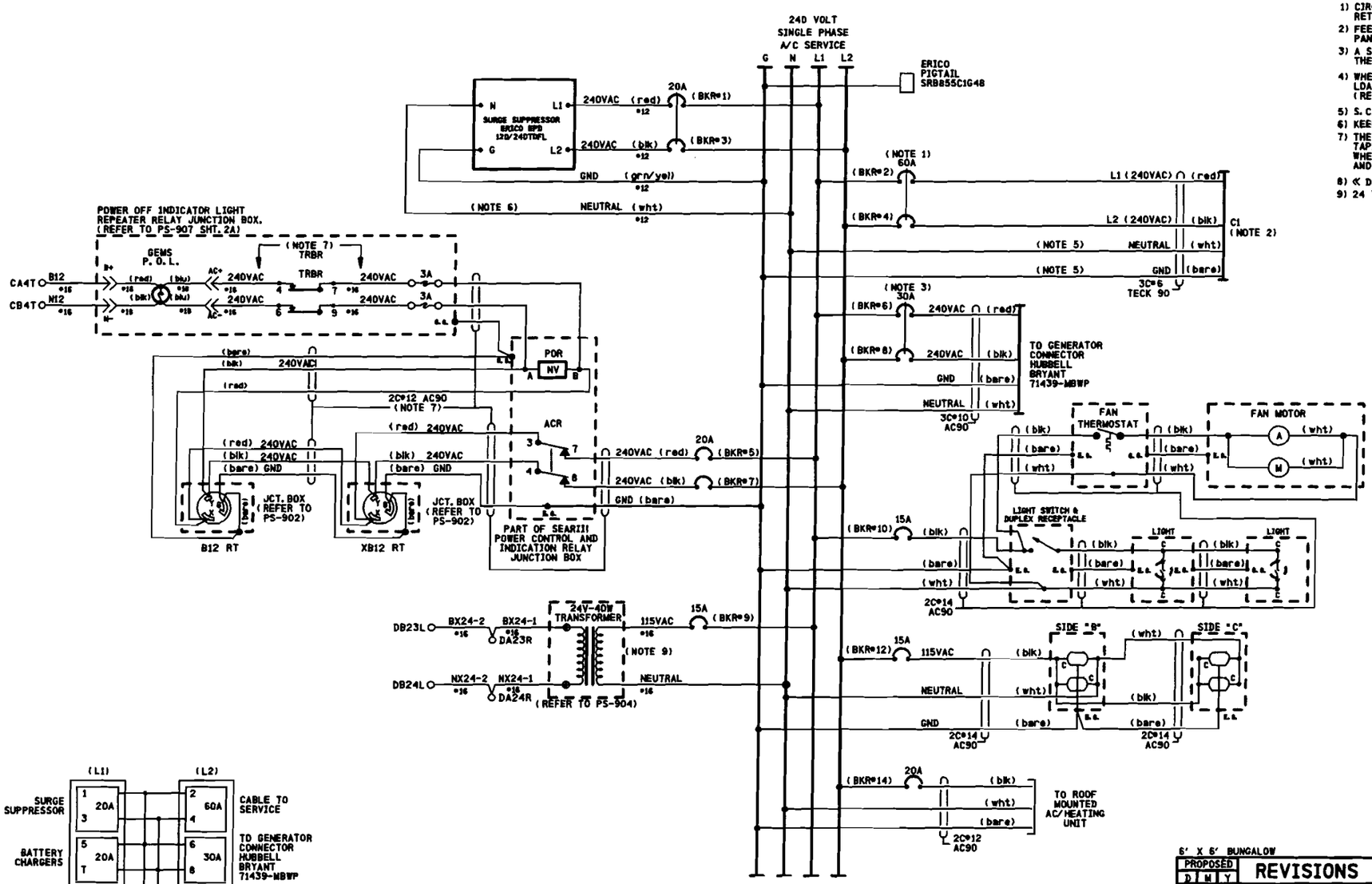

RELAY DETAIL

RELAY - POTTER & BRUMFIELD MODEL KUP-14A15-240 SOCKET MOUNTABLE 240 VDC W/ 3 FORM C CONTACTS.

SOCKET - SCREW TERMINAL MODEL 27E121.

RELAY WIRING DIAGRAM (REAR VIEW)

NOTE:
SOCKET NUMBERING CORRESPONDS DIRECTLY WITH RELAY NUMBERING. (COIL SHOWN ENERGIZED)

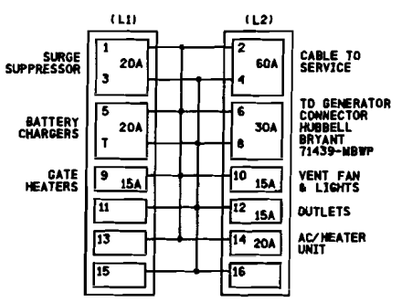

PROPOSED
DES. No. _____
RED-IN YELLOW-OUT
AS INSTALLED
DATE _____
BY _____

6' X 6' BUNGALOW

PROPOSED D	M	Y	REVISIONS	D	C	COMPLETED D	M	Y	C

REGION SOUTHERN
SUB. FREEPORT 382

SIGNALS AND COMMUNICATIONS HOMEWOOD — DES. PEA
28 OCTOBER 2008 — CH. PWW

POWER DISTRIBUTION
AC
ENGEL ROAD
BURLINGTON, IL

FR-054. 82-11

SAFETRAN SYSTEM CORP.
LOUISVILLE DIVISION, LOUISVILLE, KY

SAFETRAN SYSTEMS CORPORATION

DES.: PEA	DATE: 10/28/08	JOB NO.: PICA10159	
CKD.: PWW	ISSUE DATE: N/A	EST. NO.: N/A	
DRN.: PEA	PLAN NO. N/A	SHEET 11 OF 15	
P TIME: 13:15	P DATE: 21-NOV-2008	CAD ID.: FR-054, 82-11	

WATERMARK

FR-054. 82-12. DGN
21-NOV-2008

NO.	DATE	BY	DESCRIPTION	APP.	BY
1					
2					
3					
4					
5					

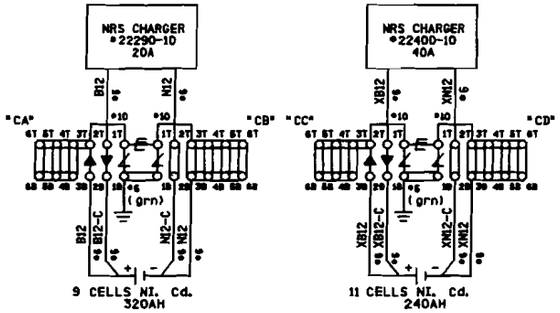

PROPOSED
DES. No. _____
RED-IN YELLOW-OUT
AS INSTALLED
DATE _____
BY _____

6' X 6' BUNGALOW

PROPOSED D	M	Y	REVISIONS	D	C	COMPLETED D	M	Y	C

REGION SOUTHERN
SUB. FREEPORT 382
SIGNALS AND COMMUNICATIONS HOMEWOOD
28 OCTOBER 2008
DES. PEA
CH. PWW
POWER DISTRIBUTION
DC
ENGEL ROAD
BURLINGTON, IL
FR-054. 82-12

SAFETRAN SYSTEM CORP.
LOUISVILLE DIVISION, LOUISVILLE, KY

SAFETRAN SYSTEMS CORPORATION

DES. : PEA	DATE: 10/28/08	JOB NO.: PICA10159	
CKD. : PWW	ISSUE DATE: N/A	EST. NO. :N/A	
DRN. : PEA	PLAN NO. :N/A	SHEET 12 OF 15	
P TIME:13:15	P DATE: 21-NOV-2008	CAD ID.: FR-054. 82-12	

WATERMARK

FR-054. 82-13. DGN
21-NOV-2008

Program Report

Location and SIN

DOT Number: 289939V
Milepost Number: 54.82
Site Name: ENGEL RDAD

SIN: 762010010016

MCF and Template Selection

MCF Name: GCP-T6X-02-1.mcf
MCF Revision: 021
MCFCRC: 6076E435

Template = 1A:6 Trk BI

Check Numbers

Office Check No. (DT 4.6.0): 0D05F093
Office Check Number: 0D05F093
Config. Check Number: 082C3AD9
(Based on MCF Revision 021)

Program

BASIC: module configuration
Track 1 Slot = Track
Track 2/RIO 1 Slot = Not Used
Track 3 Slot = Not Used
Track 4 Slot = Not Used
Track 5/RIO 2 Slot = Not Used
Track 6/RIO 3 Slot = Not Used
SSCC-1 Slot = SSCC31
SSCC-2 Slot = SSCC31
SEAR Used = Yes

BASIC: MS/GCP operation
Track 1 : MS/GCP Operation = Yes

BASIC: Island operation
Track 1 : Island Used = Internal

BASIC: preemption
Preempt Logic = No

BASIC: radio Dax links
Radio DAX link A Used = No
Radio DAX link B Used = No

BASIC: Vital Comms links
Vital Comms link 1 Used = No
Vital Comms link 2 Used = No

PREDICTORS: track 1
Track 1 : Prime Used = Yes
Track 1 : Dax A Used = No
Track 1 : Dax B Used = No
Track 1 : Dax C Used = No
Track 1 : Dax D Used = No
Track 1 : Dax E Used = No
Track 1 : Dax F Used = No
Track 1 : Dax G Used = No

GCP: track 1
Track 1 : GCP Freq Category = Standard
Track 1 : GCP Frequency = 285 Hz
Track 1 : Approach Distance = 2566 ft
Track 1 : Uni/Bi/Sim-Bidirnl = Bidirnl
Track 1 : GCP Transmit Level = High
Track 1 : Island Connection = Isl1
Track 1 : Island Distance = 120 ft
Track 1 : Computed Distance = 9999 ft
Track 1 : Linearization Steps = 100

GCP: track 1 enhanced det
Track 1 : Inbound PS Sensitivity = High
Track 1 : Speed Limiting Used = Yes
Track 1 : Outbound False Act Lvl = Normal
Track 1 : Outbound PS Timer = 20 sec
Track 1 : Trailing Switch Logic = On
Track 1 : Post Joint Detr Time = 15 sec
Track 1 : Adv Appr Predn = No
Track 1 : Cancel Pickup Delay = This Isl

GCP: track 1 prime
Track 1 : Prime Warning Time = 25 sec
Track 1 : Prime Offset Distance = 0 ft
Track 1 : Switch MS EZ Level = 11
Track 1 : Prime MS/GCP Mode = Prad
Track 1 : Prime Pickup Delay = 30 sec
Track 1 : Prime UAX = Not Used

GCP: track 1 pos start
Track 1 : Positive Start = Off
Track 1 : Sudden Shnt Det Used = No
Track 1 : Low EZ Detection Used = No

GCP: track 1 MS Control
Track 1 : MS/GCP CtrlIP Used = No
Track 1 : MS Sensitivity Level = 0
Track 1 : Compensation Level = 1300
Track 1 : Warn Time-Bamast Comp = High
Track 1 : Low EX Adjustment = 39
Track 1 : Bidirn Dax Passthru = No
Track 1 : False Act on Train Stop = No
Track 1 : EX Limiting Used = Yes
Track 1 : EZ Correction Used = Yes

ISLAND: track 1
Track 1 : IslFrequency = 8.3 kHz
Track 1 : Pickup Delay (2s +) = 0 sec
Track 1 : IslEnable IP Used = No

AND: track Anding
AND 1 XR Used = Yes
AND 2 Used = No
AND 3 Used = No
AND 4 Used = No
AND 5 Used = No
AND 6 Used = No
AND 7 Used = No
AND 8 Used = No

AND: AND 1 XR
AND 1 XR Track 1 = Prime
AND 1 Enable Used = Yes
And 1 Enable Pickup = 0 sec
AND 1 Enable Drop = 0 sec
AND 1 Wrap Used = No

ADVANCED: MS restart
MS/GCP Restart Used = No

ADVANCED: out of service
OOS Control = OOS IPs

ADVANCED: out of service 2
T1 OOS Control = OOS Input 1
T1 OOS Controls = GCP and Island

ADVANCED: track wrap circuits
Wrap LOS Timer = 5 sec
Track 1 Wrap Used = No

ADVANCED: trk 1 overrides
Track 1 : AllPredictors Override Used = No

ADVANCED: OR logic
OR 1 Used = No
OR 2 Used = No
OR 3 Used = No
OR 4 Used = No

ADVANCED: Internal I/O 1
Pass Thrus = No
Int.1 Sets = Not Used
Int.1 Set by = Not Used
Int.2 Sets = Not Used
Int.2 Set by = Not Used
Int.3 Sets = Not Used
Int.3 Set by = Not Used
Int.4 Sets = Not Used
Int.4 Set by = Not Used

ADVANCED: Internal I/O 2
Int.5 Sets = Not Used
Int.5 Set by = Not Used
Int.6 Sets = Not Used
Int.6 Set by = Not Used
Int.7 Sets = Not Used
Int.7 Set by = Not Used
Int.8 Sets = Not Used
Int.8 Set by = Not Used

ADVANCED: Internal I/O 3
Int.9 Sets = Not Used
Int.9 Set by = Not Used
Int.10 Sets = Not Used
Int.10 Set by = Not Used
Int.11 Sets = Not Used
Int.11 Set by = Not Used
Int.12 Sets = Not Used
Int.12 Set by = Not Used

ADVANCED: Internal I/O 4
Int.13 Sets = Not Used
Int.13 Set by = Not Used
Int.14 Sets = Not Used
Int.14 Set by = Not Used
Int.15 Sets = Not Used
Int.15 Set by = Not Used
Int.16 Sets = Not Used
Int.16 Set by = Not Used

ADVANCED: site options
Daylight Savings = On
Units = Standard
Maint Call Rpt IP Used = No
Emergency Activate IP = No
EZ/EX Logging = Change
EZ/EX Point Change = 3

SSCC
Gates Used = Yes
SSCC1+2 GPs Coupled = Yes
Min Activation = 20 sec
Rmt Activation Cancel = 3 min
Bell On Gate Rising = No
Mute Bell On Gate Down = No
SSCCIV Controller Used = No

SSCC: 1
SSCC-1 Activation = AND 1 XR
SSCC-1 Gate Delay = 3 sec
SSCC-1 Number of GPs = 1
SSCC-1 Number of GDs = 1
SSCC 1 : Flash Rate = 60
SSCC 1 : Low Battery Detection = No
SSCC 1 : Flash Sync = master
SSCC 1 : Invert Gate Output = No
SSCC 1 : Lamp Neutral Test = Off
Aux-1 Xng CtrlUsed = No

SSCC: 2
SSCC-2 Activation = AND 1 XR
SSCC-2 Gate Delay = 3 sec
SSCC-2 Number of GPs = 0
SSCC-2 Number of GDs = 1
SSCC 2 : Flash Rate = 60
SSCC 2 : Low Battery Detection = No
SSCC 2 : Flash Sync = slave
SSCC 2 : Invert Gate Output = No
SSCC 2 : Lamp Neutral Test = Off
Aux-2 Xng CtrlUsed = No

OUTPUT: assignment page 1
OUT 1.1 = Not Used
OUT 1.2 = Not Used

INPUT: assignment page 1
IN 1.1 = Not Used
IN 1.2 = Not Used

IO: assignment SSCC
OUT GC 1 = Gate Output 1
OUT GC 2 = Gate Output 2
IN 7.1 = AND 1 XR Enable
IN 7.2 = Not Used
IN 7.3 = Not Used
IN 7.4 = GD 1.1
IN 7.5 = GP 1.1
IN 8.1 = Out Of Service IP 1
IN 8.2 = Not Used
IN 8.3 = Not Used
IN 8.4 = GD 2.1
IN 8.5 = Not Used

SEAR
SEAR Subnode = 99
DI 1 = General1
DI 2 = Gnd Flt Tester 1
Rly 1 = Ground Fault Test
Rly 2 = AC Control

SEAR: inputs
SP 2.1 = POK 1
SP 3.1 = Not Used
SP 4.1 = Not Used
SP 5.1 = Not Used
SP 6.1 = Not Used

SEAR: slot 1-4 inputs
IN 1.1 = Not Used
IN 1.2 = Not Used
IN 2.1 = Not Used
IN 2.2 = POK 2
IN 3.1 = Not Used
IN 3.2 = Not Used
IN 4.1 = Not Used
IN 4.2 = Not Used

SEAR: inputs slot 5
IN 5.1 = Not Used
IN 5.2 = Not Used

SEAR: inputs slot 6
IN 6.1 = Not Used
IN 6.2 = Not Used

SEAR: slot 7-8 inputs
IN 7.2 = Not Used
IN 7.3 = TSS 1
IN 8.2 = Not Used
IN 8.3 = TSS 2
IN 8.5 = General2

SITE: programming
Radio Subnode = 1
Field Password = Off
Low Battery Enabled = Off

Configuration Package File

Filename: 289939V.pac

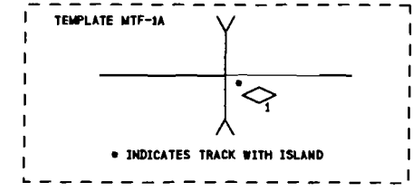

NOTES:

1) DISTANCE(S) TO BE VERIFIED AT INSTALLATION. INDICATE SELECTED PROGRAMMED VALUE IF DIFFERENT THAN SHOWN. REFER TO 4000 GCP INSTRUCTION/INSTALLATION MANUAL FOR PROGRAMMING PARAMETERS.

2) PROGRAM TEXT HIGHLITED IN RED INDICATES 4000 PROGRAM MODIFICATIONS TO DEFAULT PROGRAM VALUES.

3) EACH CONSTANT WARNING DEVICE SYSTEM TO BE PROGRAMMED TO CONVERT TO A MOTION SENSOR 300 FEET FROM EDGE OF ROAD TRAVELLED WAY.
SHUNT TRACK 300 FEET FROM EDGE OF ROAD TRAVELLED WAY AND NOTE "EZ" VALUE.
PROGRAM EACH SYSTEM WITH THE INDICATED "EZ" VALUE +2.

4) VERIFY SET TIMER VALUE TO MATCH ACTUAL TRAIN MOVEMENT WITHIN THE CROSSING APPROACH CIRCUITS.

PROPOSED
DES. No. _____
RED-IN YELLOW-OUT
AS INSTALLED
DATE _____
BY _____

PROPOSED D	M	Y	REVISIONS	D	C	COMPLETED D	M	Y	C

REGION SOUTHERN
SUB. FREEPORT 382
CN
SIGNALS AND COMMUNICATIONS HOMEWOOD — DES. PEA
28 OCTOBER 2008 — CH. PWW
GCP 4000
PROGRAM INFORMATION
ENGEL ROAD
BURLINGTON, IL
FR-054. 82-13
SAFETRAN SYSTEM CORP.
LOUISVILLE DIVISION, LOUISVILLE, KY

REVISIONS NO.	DATE	BY	DESCRIPTION	APP. BY
1				
2				
3				
4				
5				

SAFETRAN SYSTEMS CORPORATION
DES. : PEA — DATE: 10/28/08 — JOB NO. : PICAIO159
CKD. : PWW — ISSUE DATE: N/A — EST. NO. : N/A
DRN. : PEA — PLAN NO. : N/A — SHEET 13 OF 15
P. TIME: 13:15 — P DATE: 21-NOV-2008 — CAD ID. : FR-054. 82-13

WATERMARK

REVISIONS			
NO.	DATE	BY	DESCRIPTION	APP. BY
1				
2				
3				
4				
5				

TO CONFIGURE SEARII & SEARIII PRESS SITE SETUP KEY. USE ARROW KEYS TO MAKE SELECTION, PRESS ENTER AFTER SELECTION HAS BEEN MADE.

STAGE 1

PROGRAM MENU QUESTIONS	PROGRAM	OPTIONS/RANGE
DATE/TIME?	CURRENT DATE/TIME	CURRENT DATE/TIME
AUTOMATIC DST ADJUSTMENT?	YES	YES, NO
TIME ZONE?	CENTRAL	EASTERN, CENTRAL, MOUNTAIN, PACIFIC, ALASKA, HAWAII, ATLANTIC, SASKATCHEWAN, NEW FOUNLAND
SITE NAME?	ENGEL ROAD	STREET NAME
MILE POST?	54.82	MILEAGE
DOT/CROSSING IS #?	289 939V	
TESTER TYPE?	CROSSING	CROSSING, WAYSIDE
DATE FORMAT?	dd-mm-yyyy	mm-dd-yyyy, dd-mm-yyyy
TEMPERATURE FORMAT?	FAHRENHEIT	FAHRENHEIT, CELSIUS
SITE TYPE?	NO COM	NO COM, BULLHORN, DIALUP, NODE, COLLECTOR
SITE ATCS ADDRESS?	7.620.100.100.99.01	7.RRR.LLL.GGG.99.01
OFFICE ATCS ADDRESS?		2.RRR.NN.DDDD
(FOR NODE USE) PRIMARY HOP ADDR?		7.RRR.LLL.GGG.00.01
(FOR NODE USE) BACKUP HOP ADDR1?		7.RRR.LLL.GGG.00.01
(FOR NODE USE) BACKUP HOP ADDR2?		7.RRR.LLL.GGG.00.01
(FOR COLLECTOR USE) POLL ID?		1-99
(FOR COLLECTOR USE) MODE?		GEN/ATCS, GENISYS
(FOR COLLECTOR USE) WAMS/XID?		ENABLED, DISABLE
(FOR COLLECTOR USE) OFFICE COMM. DEVICE?		DIRECT (RS232) MCM (RS232) MCM (ECHELON) SREAD SPEC (ECHELON) DIAL MODEM (RS232) S200 RADIO (RS422)
(FOR COLLECTOR USE) OFFICE PHONE NUMBER?		PHONE NUMBER OF WAMS
(FOR COLLECTOR USE) INIT STRING?		OPTIONAL HAYES MODEM INITIALIZATION STRING
FIELD COMM. DEVICE?		VHF COMM. (ECHELON) VHF COMM. (RS232) SPREAD SPEC (ECHELON) SPREAD SPEC (RS232)
USER PORT?	5T600, 8, N, 1, N	BAUD, DATA BITS, PARITY, STOP BITS, FLOW CONTROL
AUX PORT?	9600, 8, N, 1, N	BAUD, DATA BITS, PARITY, STOP BITS, FLOW CONTROL

YOU WILL NOW SEE A MESSAGE "PLEASE WAIT COMPILING STAGE 1"
CONTINUE TO NEXT PROGRAM MENU QUESTIONS.

STAGE 2

QUESTION	PROGRAM	SELECTION 1 (MINIMUM)	SELECTION 2 (MAXIMUM)	CONDITION FOR MENU DISPLAY
RESET NAMES / MODULES ?	NO	YES	NO	ALWAYS
RAILROAD NUMBER ?	360	1	999	ALWAYS
CROSSING CONFIGURATION	NORMAL	NORMAL	SPLIT GATE (NOTE 2)	ALWAYS
ENTRANCE GATES ?	2	0	8	ALWAYS
GATE POSTION FAIL TIME (SECONDS) ?	N/A	10	60	GATES > 0
BATTERY BANKS ?	2	1	3	ALWAYS
BATT MON USED ?	NO	NO	YES	ALWAYS
INTERNAL CROSSING CONTROLLERS ?	2	0	2	ALWAYS
EXTERNAL CROSSING CONTROLLERS ?	0	0	2	CROSSING CONTROLLER = YES
VHF COMMUNICATOR ?	YES	YES	NO	ALWAYS
DTMF ACTIVATION?	NO	NO	YES	RAILROAD = 360
ACTIVATION CODE ?	N/A	1	999	VHF COMMUNICATOR = YES
ACTIVATION TIMEOUT ?	N/A	1	600	VHF COMMUNICATOR = YES
ILOD MODULES ?	2	0	4	ALWAYS
ANY LED BULBS USED ?	YES	NO	YES	ILOD MODULES > 0
AUTO INSPECTION ?	NO	YES	NO	ALWAYS
BELL SENSORS ?	1	0	8	ALWAYS
BELL SENSORS TSS1 ?	YES	NO	YES	BELL SENSORS > 0
BELL SENSORS TSS2 ?	YES	NO	YES	BELL SENSORS > 0
BELL SENSORS TSS3 ?	N/A	NO	YES	BELL SENSORS > 0
BELL SENSORS TSS4 ?	N/A	NO	YES	BELL SENSORS > 0
BELL SENSORS TSS5 ?	N/A	NO	YES	BELL SENSORS > 0
BELL SENSORS TSS6 ?	N/A	NO	YES	BELL SENSORS > 0
BELL SENSORS TSS7 ?	N/A	NO	YES	BELL SENSORS > 0
BELL SENSORS TSS8 ?	N/A	NO	YES	BELL SENSORS > 0
BELL ON ?	GATES LOWERING	GATES LOWERING	GATES MOVING	BELL SENSORS > 0
GFT'S ?	YES	YES	NO	ALWAYS
BATTERIES ON GFT1 ?	2	1	2	GFT'S = YES
GATE TIP SENSORS ?	YES	YES	NO	GATES > 0
RTU ?	NO	NO	YES	ALWAYS
VHF VOICE CHANNEL ?	1 (NOTE 1)	1	8	VHF COMMUNICATOR = YES
VHF DATA CHANNEL ?	1 (NOTE 1)	1	8	VHF COMMUNICATOR = YES
USE CELL MODEM NON-CRITICAL FEATURE ?	NO	NO	YES	ALWAYS
FULL APPROACH MOVE ALARMS ?	ACTIVATE	ACTIVATE	DO NOT ACTIVATE	ALWAYS

YOU WILL NOW SEE A MESSAGE "PLEASE WAIT COMPILING STAGE 2"
CONTINUE TO NEXT PROGRAM MENU QUESTIONS.

STAGE 3

PROGRAM MENU QUESTIONS	PROGRAM
EDIT DIGITAL INPUTS	NO
EDIT BATTERIES	NO
EDIT RELAYS	NO
EDIT TEST LEDS	NO
EDIT ILOD SENSORS	NO
EDIT VHF SETTINGS	NO
GCP4K ATCS SUBNODE?	16

SAVE CONFIGURATION

NOTES:
1) INDICATE SELECTION IN SPACE PROVIDED.
2) ADDITIONAL OPTIONS: DUAL CROSSING, EXTERNAL ENTRANCE GATE CONTROLLERS.

PROPOSED
DES. No. _____
RED-IN YELLOW-OUT
AS INSTALLED
DATE _____
BY _____

SEARII EXECUTIVE 9V725 REV. A01U, SEARII APPLICATION 9V864 REV. A01J

PROPOSED D	PROPOSED M	PROPOSED Y	REVISIONS	D	C	COMPLETED D	COMPLETED M	COMPLETED Y	C

REGION SOUTHERN
SUB. FREEPORT 382
SIGNALS AND COMMUNICATIONS HOMEWOOD
DES. PEA
28 OCTOBER 2008
CH. PWW
GCP 4000/SEAR III
SETUP AND PROGRAM
ENGEL ROAD
BURLINGTON, IL
FR-054.82-14

SAFETRAN SYSTEM CORP.
LOUISVILLE DIVISION, LOUISVILLE, KY

SAFETRAN SYSTEMS CORPORATION
DES.: PEA | DATE: 10/28/08 | JOB NO.: PTCA10159
CKD.: PWW | ISSUE DATE: N/A | EST. NO.: N/A
DRN.: PEA | PLAN NO.: N/A | SHEET 14 OF 15
P TIME: 13:15 | P DATE: 21-NOV-2008 | CAD ID.: FR-054.82-14

FR-054.82-14.DGN
21-NOV-2008

WATERMARK

FR-054, 82-15, DCH
21-NOV-2008

REVISIONS				
NO.	DATE	BY	DESCRIPTION	APP. BY
1				
2				
3				
4				
5				

CALIBRATION HISTORY

INITIAL SET UP BY: _____ DATE: _____

DC VOLTAGE READINGS AFTER CALIBRATION				CALIBRATION HISTORY										LINEARIZATION HISTORY (NOTE 1)							
				EZ/EX VALUES (TRACK UNOCCUPIED)				HARD WIRE SHUNT AT TERMINATION SHUNT						HARD WIRE SHUNT AT 50 PERCENT POINT OF SHUNT							
				EZ		EX		EZ		EX		50 PERCENT OF EZ VALUE		NO LINEARIZATION				LINEARIZATION COMPLETE			
														EZ		EX		STEP±		EZ	
				NRML	STBY	NRML	STBY	NRML	STBY	NRML	STBY	NRML	STBY	NRML	STBY	NRML	STBY	NRML	STBY	NRML	STBY
T1	Z1=	WEST	TRACK 1																		
	Z2=	EAST	TRACK 1																		

CALIBRATION HISTORY

INITIAL SET UP BY: _____ DATE: _____

DC VOLTAGE READINGS AFTER CALIBRATION				CALIBRATION HISTORY										LINEARIZATION HISTORY (NOTE 1)							
				EZ/EX VALUES (TRACK UNOCCUPIED)				HARD WIRE SHUNT AT TERMINATION SHUNT						HARD WIRE SHUNT AT 50 PERCENT POINT OF SHUNT							
				EZ		EX		EZ		EX		50 PERCENT OF EZ VALUE		NO LINEARIZATION				LINEARIZATION COMPLETE			
														EZ		EX		STEP±		EZ	
				NRML	STBY	NRML	STBY	NRML	STBY	NRML	STBY	NRML	STBY	NRML	STBY	NRML	STBY	NRML	STBY	NRML	STBY
T1	Z1=	WEST	TRACK 1																		
	Z2=	EAST	TRACK 1																		

CALIBRATION HISTORY

INITIAL SET UP BY: _____ DATE: _____

DC VOLTAGE READINGS AFTER CALIBRATION				CALIBRATION HISTORY										LINEARIZATION HISTORY (NOTE 1)							
				EZ/EX VALUES (TRACK UNOCCUPIED)				HARD WIRE SHUNT AT TERMINATION SHUNT						HARD WIRE SHUNT AT 50 PERCENT POINT OF SHUNT							
				EZ		EX		EZ		EX		50 PERCENT OF EZ VALUE		NO LINEARIZATION				LINEARIZATION COMPLETE			
														EZ		EX		STEP±		EZ	
				NRML	STBY	NRML	STBY	NRML	STBY	NRML	STBY	NRML	STBY	NRML	STBY	NRML	STBY	NRML	STBY	NRML	STBY
T1	Z1=	WEST	TRACK 1																		
	Z2=	EAST	TRACK 1																		

NOTE:

1) **SET UP APPROACH LENGTH AND LINEARIZATION CALIBRATION**
VERIFY THAT "ENHANCED DETECTION" MODE IS PROGRAMMED "OFF" BEFORE ATTEMPTING LINEARIZATION PROCEDURES.

PROPOSED
DES. No. _____
RED-IN YELLOW-OUT
AS INSTALLED
DATE _____
BY _____

PROPOSED D	M	Y	REVISIONS	D	C	COMPLETED D	M	Y	C

REGION SOUTHERN
SUB. FREEPORT 382
CN

SIGNALS AND COMMUNICATIONS HOMEWOOD
DES. PEA
28 OCTOBER 2008
CH. PWW

GCP 4000
CALIBRATION HISTORY
ENGEL ROAD
BURLINGTON, IL

FR-054, 82-15

SAFETRAN SYSTEM CORP.
LOUISVILLE DIVISION, LOUISVILLE, KY

15

SAFETRAN SYSTEMS CORPORATION

DES. : PEA	DATE: 10/28/08	JOB NO. : PICA10159	
CKD. : PWW	ISSUE DATE: N/A	EST. NO. :N/A	
DRN. : PEA	PLAN NO. :N/A	SHEET 15 OF 15	
P TIME:13:15	P DATE: 21-NOV-2008	CAD ID. : FR-054, 82-15	

WATERMARK

fre-055.20-01.dgn
25-NOV-2008

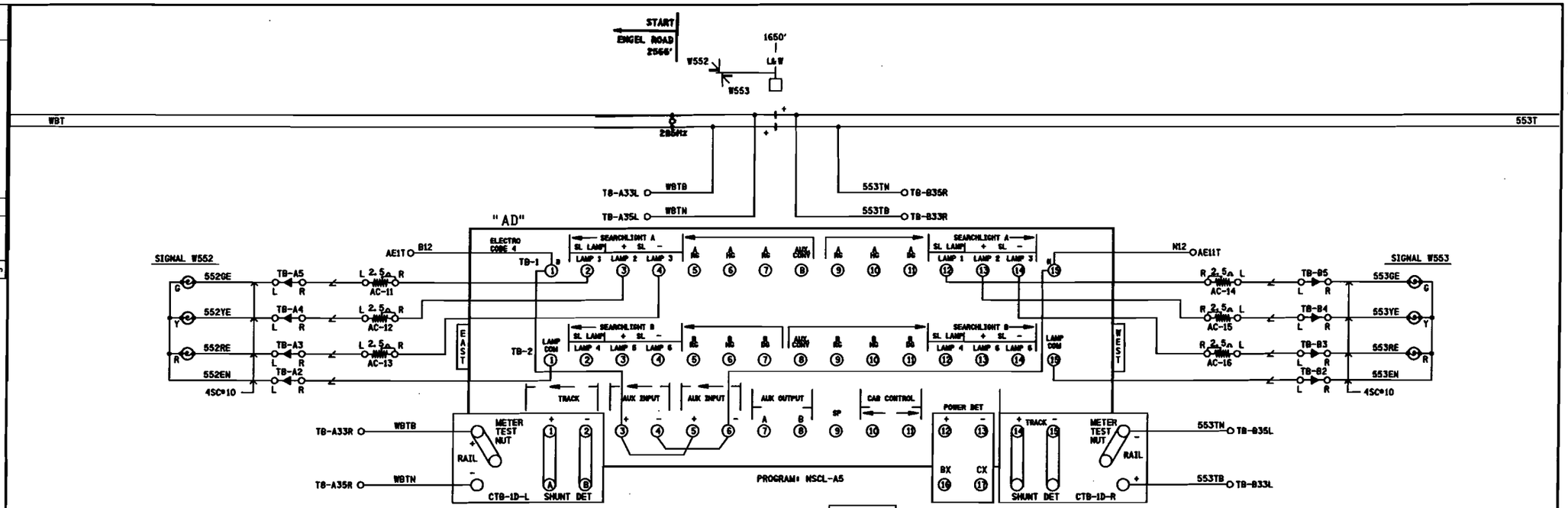

NOTES:
1) ALL WIRING #10 AWG UNLESS OTHERWISE NOTED.

◊ DENOTES MULTI-FREQ. NARROW BAND SHUNT 62775-1543.

PROPOSED
DES. No. _____
RED-IN YELLOW-OUT
AS INSTALLED
DATE _____
BY _____

6' X 6' BUNGALOW

PROPOSED D	M	Y	REVISIONS	D	C	COMPLETED D	M	Y	C

REGION SOUTHERN
SUB. FREEPORT 382
SIGNALS AND COMMUNICATIONS HOMEWOOD
DES. PEA
11 NOVEMBER 2008
CH. DTB
L & W CASE
TRACK AND ECODE 4
SIGNALS W553/W552
BURLINGTON, IL
FRE-055.20-01

SAFETRAN SYSTEM CORP.
LOUISVILLE DIVISION, LOUISVILLE, KY

REVISIONS					
NO.	DATE	BY	DESCRIPTION	BY	APP.
1					
2					
3					
4					
5					

SAFETRAN SYSTEMS CORPORATION

DES. : PEA	DATE: 11/11/08	JOB NO. : PTCA10159	
CKD. : DTB	ISSUE DATE: N/A	EST. NO. :	
DRN. : PEA	PLAN NO. :N/A	SHEET 1 OF 4	
P. TIME:15:11	P. DATE: 25-NOV-2008	CAD ID. : FRE-055. 20-01	

WATERMARK

NO.	DATE	BY	REVISIONS DESCRIPTION	APP. BY
1				
2				
3				
4				
5				

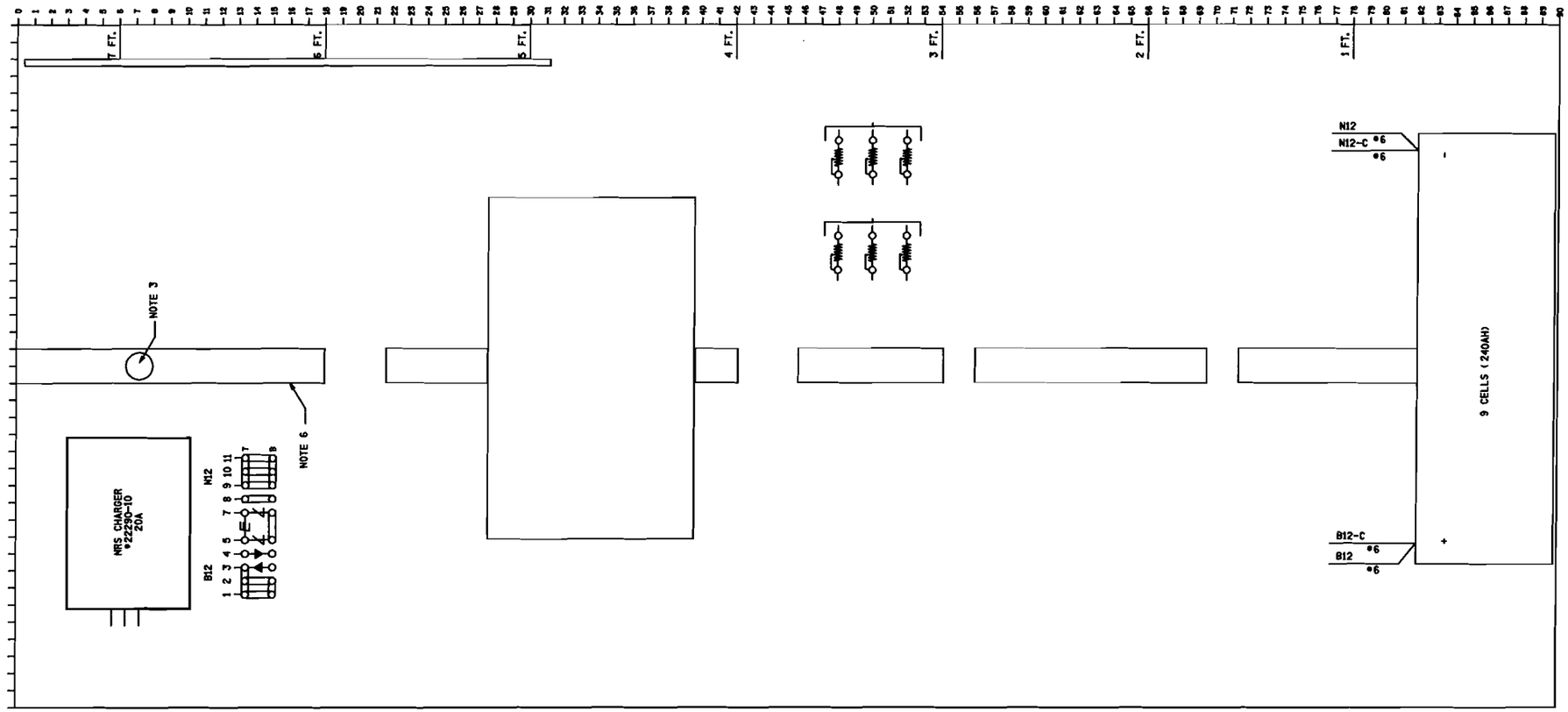

NOTES:

1-SAFETRAN-HEAVY DUTY CLEARVIEW ARRESTER ON 3 POST BASE #022585-5X, HEAVY DUTY EQUALIZER #022700-1X OR EQUIVALENTS

2-HARMON EC4

3-WAYSIDE SIGNAL HEAD WIRING ACCESS HOLE.

4-CENTER ALUMINUM HOUSE SECTION 2" WIDE. REMAINING WALL SPACE IS MDO PLYWOOD PAINTED WHITE.

5-GROUND STUD 1/4" - 24 X 2" NICKEL PLATED.

PROPOSED
DES. No. _____
RED-IN YELLOW-OUT
AS INSTALLED
DATE _____
BY _____

6' X 6' BUNGALOW

PROPOSED D	M	Y	REVISIONS	D	C	COMPLETED D	M	Y	C

REGION SOUTHERN
SUB. FREEPORT 382
CN

SIGNALS AND COMMUNICATIONS HOMEWOOD | DES. PEA
11 NOVEMBER 2008 | CH. DTB

L & W CASE
SIDE "A"
SIGNALS W553/W552
BURLINGTON, IL

FRE-055.20-02

SAFETRAN SYSTEM CORP.
LOUISVILLE DIVISION, LOUISVILLE, KY

SAFETRAN SYSTEMS CORPORATION

DES. : PEA	DATE: 12/11/08	JOB NO. : PGTA10056	
CKD. : DTB	ISSUE DATE: N/A	EST. NO. :	
DRN. : PEA	PLAN NO. N/A	SHEET 2 OF 4	
P TIME: 15:11	P DATE: 25-NOV-2008	CAD ID. : FRE-055.20-02	

fre-055.20-02.dgn
25-NOV-2008

$WATERMARK

fre-055.20-03.dgn
25-NOV-2008

NO.	DATE	BY	DESCRIPTION	APP. BY
1				
2				
3				
4				
5				

REVISIONS

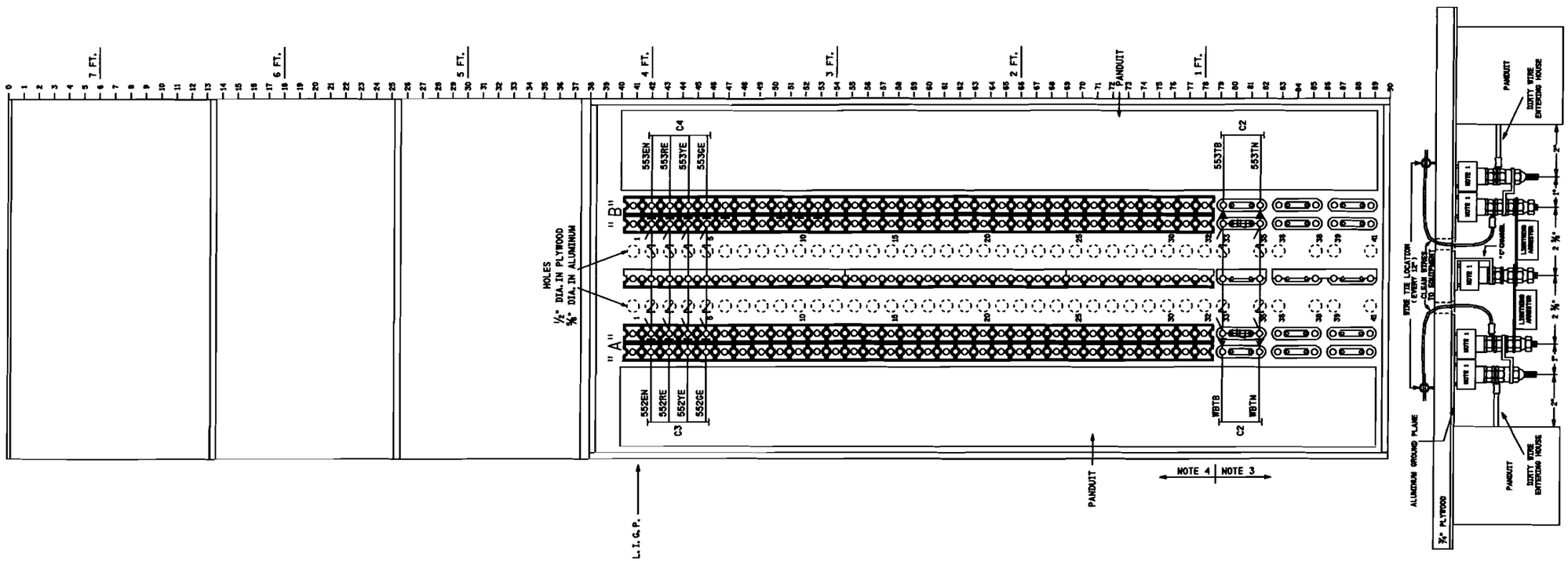

CABLE CONSIST:

C1- 3C#6 TECK TO SERVICE
C2- 2C#6 TW. TO TRACK
C3- 4SC#10 TO SIGNAL 552
C4- 4SC#10 TO SIGNAL 553

NOTES:

1- BAKELIGHT TERMINAL BLOCK SAFETRAN 023390-11X OR EQUIVALENT

2- BAKELIGHT TERMINAL BLOCK SAFETRAN 023612-5X OR EQUIVALENT

3-SAFETRAN-HEAVY DUTY CLEARVIEW ARRESTER #022585-1X, HEAVY DUTY EQUALIZER #022700-1X OR EQUIVALENTS

4-SAFETRAN-CLEARVIEW ARRESTER #022485-28X EQUIVALENT

PROPOSED
DES. No. _____
RED-IN YELLOW-OUT
AS INSTALLED
DATE _____
BY _____

6' X 6' BUNGALOW

PROPOSED D	M	Y	REVISIONS	D	C	COMPLETED D	M	Y	C

REGION SOUTHERN
SUB. FREEPORT 382
CN

SIGNALS AND COMMUNICATIONS HOMEWOOD
11 NOVEMBER 2008
DES. PEA
CH. DTB

L & W CASE
TERMINAL BOARD
SIGNALS W553/W552

BURLINGTON, IL

FRE-055.20-03

SAFETRAN SYSTEM CORP
LOUISVILLE DIVISION, LOUISVILLE, KY

SAFETRAN SYSTEMS CORPORATION			
DES.: PEA	DATE: 11/11/08	JOB NO.: PGTA10056	
CKD.: DTB	ISSUE DATE: N/A	EST. NO.:	
DRN.: PEA	PLAN NO.: N/A	SHEET 3 OF 4	
P TIME: 15:11	P DATE: 25-NOV-2008	CAD ID.: FRE-055.20-03	

WATERMARK

NO.	DATE	BY	REVISIONS DESCRIPTION	APP. BY
1				
2				
3				
4				
5				

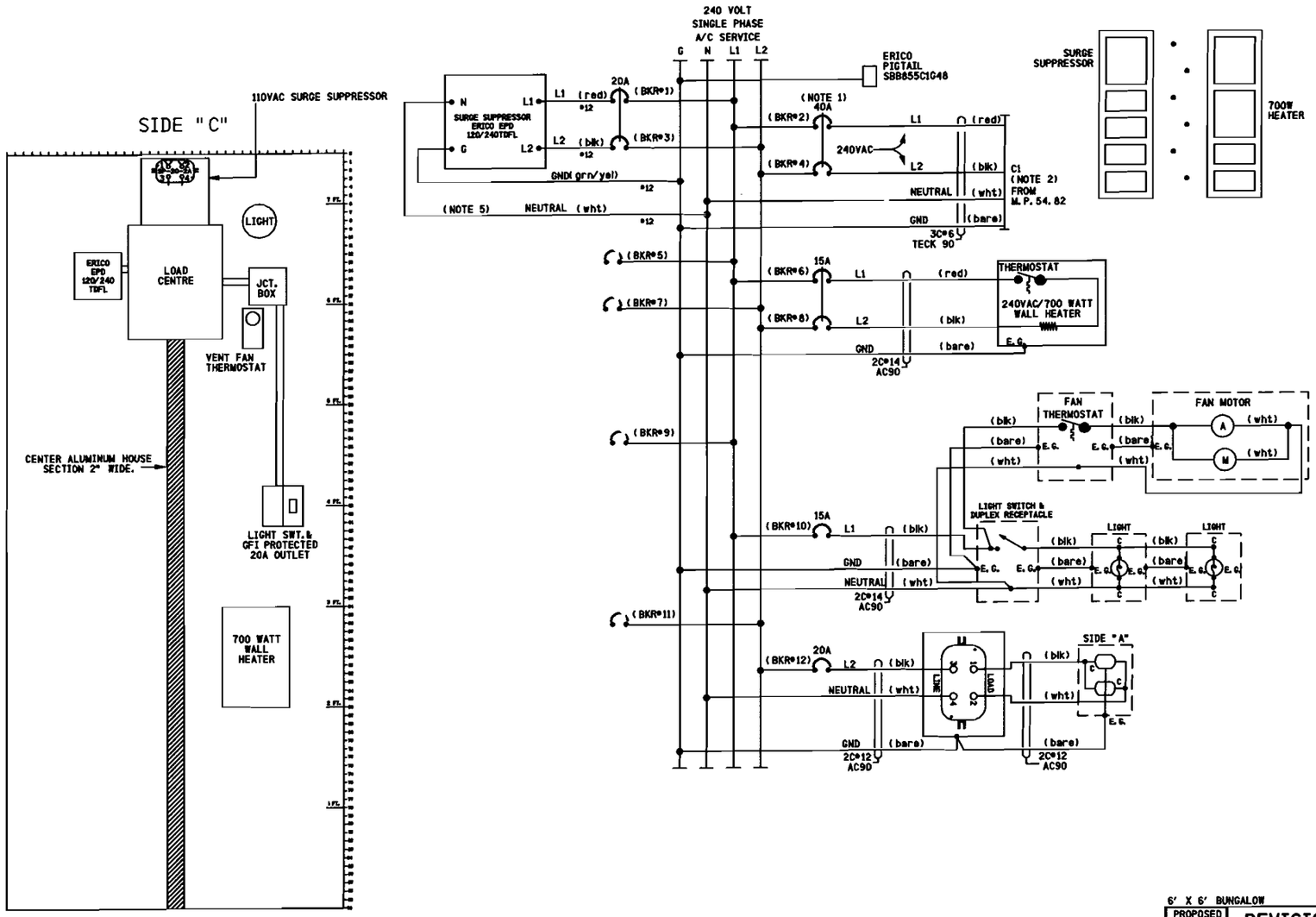

NOTES:

1) CIRCUIT BREAKER NOT TO EXCEED 40 AMPERES. RETAINING KIT PK4MB2LA MUST BE USED WITH 60A BREAKER.
2) FEEDER CIRCUIT BREAKER, AT STUB POLE SERVICE PANEL, NOT TO EXCEED 40 AMPERES.
3) ERICO PIGTAIL CONNECTED TO STUD ON METAL HOUSING
4) WHERE SEPARATE GROUND WIRE EXISTS BETWEEN THE SERVICE AND THE LOAD CENTER, REMOVE THE BRASS COLORED BONDING SCREW. (REFER TO SCHEMATIC ON BOX COVER FOR EXACT LOCATION)
5) KEEP LEADS AS SHORT AS POSSIBLE

PROPOSED
DES. No. _____
RED-IN YELLOW-OUT
AS INSTALLED
DATE _____
BY _____

6' X 6' BUNGALOW

PROPOSED D	M	Y	REVISIONS	D	C	COMPLETED D	M	Y	C

REGION SOUTHERN
SUB. FREEPORT 382
SIGNALS AND COMMUNICATIONS HOMEWOOD
11 NOVEMBER 2008
DES. PEA
CH. DTB
L & W CASE
POWER DISTRIBUTION
SIGNALS W553/W552
BURLINGTON, IL
FRE-055.20-04
4

SAFETRAN SYSTEM CORP.
LOUISVILLE DIVISION, LOUISVILLE, KY

SAFETRAN SYSTEMS CORPORATION		
DES.: PEA	DATE: 11/1/08	JOB NO.: PGTA10056
CKD.: DTB	ISSUE DATE: N/A	EST. NO.: 1
DRN.: PEA	PLAN NO.: N/A	SHEET 4 OF 4
P. TIME: 15:11	P. DATE: 25-NOV-2008	CAD ID.: FRE-055.20-04

fre-055.20-04.dgn
25-NOV-2008