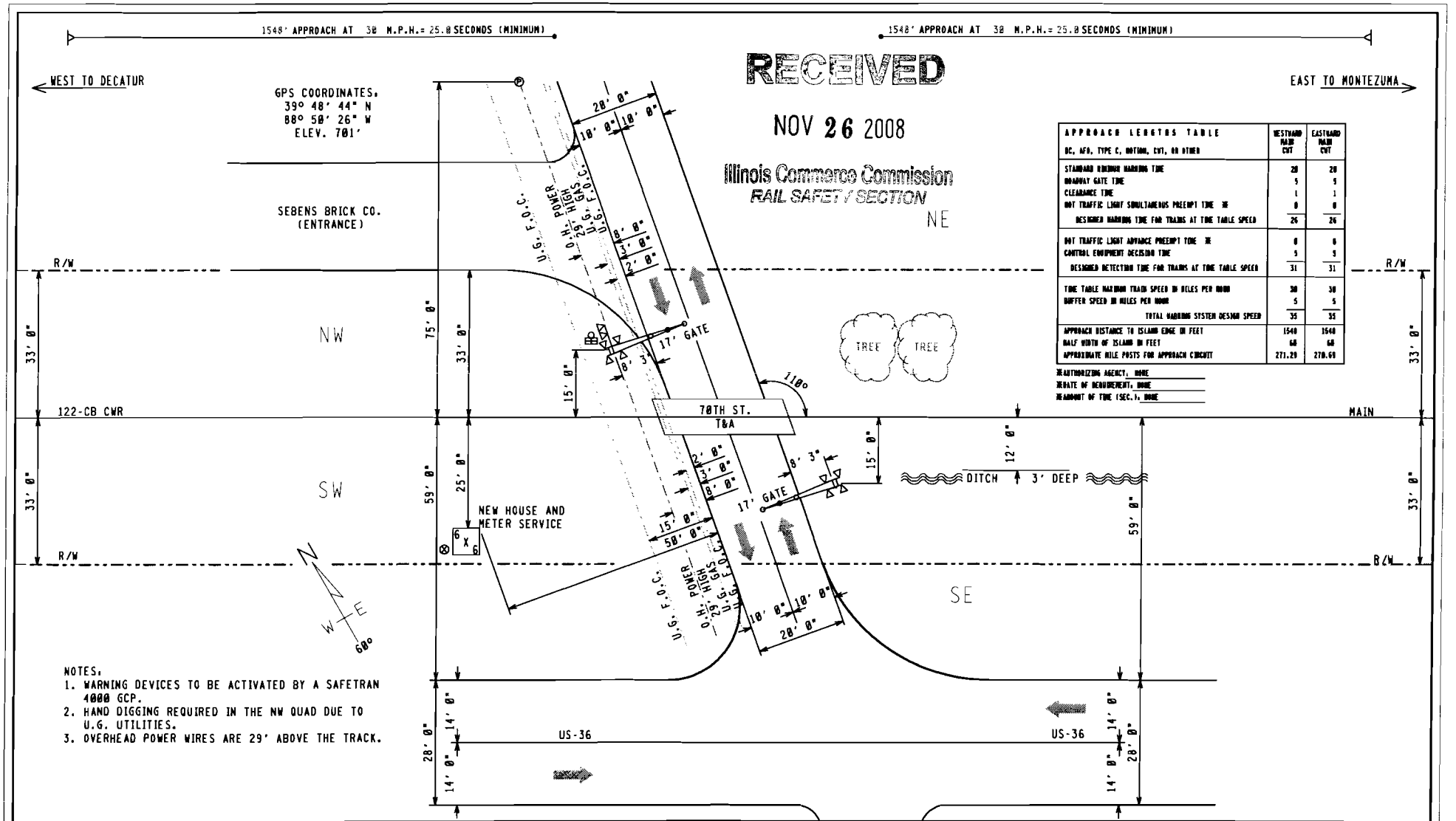

NOTES.
1. WARNING DEVICES TO BE ACTIVATED BY A SAFETRAN 4000 GCP.
2. HAND DIGGING REQUIRED IN THE NW QUAD DUE TO U.G. UTILITIES.
3. OVERHEAD POWER WIRES ARE 29' ABOVE THE TRACK.

RECEIVED
NOV 26 2008
Illinois Commerce Commission
RAIL SAFETY SECTION

APPROACH LENGTHS TABLE DC, AFB, TYPE C, MOTION, CVT, OR OTHER	WESTBOUND MAIN CVT	EASTBOUND MAIN CVT
STANDARD MINIMUM WARNING TIME	20	20
ROADWAY GATE TIME	5	5
CLEARANCE TIME	1	1
DOT TRAFFIC LIGHT SIMULTANEOUS PREEMPT TIME *	0	0
DESIGNED WARNING TIME FOR TRAINS AT TIME TABLE SPEED	26	26
DOT TRAFFIC LIGHT ADVANCE PREEMPT TIME *	0	0
CONTROL EQUIPMENT DECISION TIME	5	5
DESIGNED DETECTION TIME FOR TRAINS AT TIME TABLE SPEED	31	31
TIME TABLE MAXIMUM TRAIN SPEED IN MILES PER HOUR	30	30
BUFFER SPEED IN MILES PER HOUR	5	5
TOTAL WARNING SYSTEM DESIGN SPEED	35	35
APPROACH DISTANCE TO ISLAND EDGE IN FEET	1540	1540
HALF WIDTH OF ISLAND IN FEET	68	68
APPROXIMATE MILE POSTS FOR APPROACH CIRCUIT	271.29	270.68

*AUTHORIZING AGENCY: NONE
*DATE OF REQUIREMENT: NONE
*AMOUNT OF TIME (SEC.): NONE

FILE NAME. BD27099.H01	REVISION DATES	PRODUCED FOR.	PRODUCED BY.	LEGEND	GUARD RAIL	METER SERVICE	STREET NAME. 70TH. STREET
DATE DRAWN. 06-05-2008	- -	CSX TRANSPORTATION	SAFETRAN systems	CSX ROW	O.H. POWER	POLE	CITY & STATE. DECATUR, IL
DRAWN BY. GARY CARLEE	- -	RAIL TRANSPORT GROUP ENGINEERING	7775 BAYMEADOWS WAY	R/R POLELINE	FENCE	FIRE PLUG	PROJECT #. IL2008018
CHECKED BY. ERNESTO PROSPERO	- -	COMMUNICATIONS AND SIGNALS	SUITE 250	GAS	WATER	SEWER CAP	OP #. IL0249
SSC #. JXXD00660	- -		JACKSONVILLE, FL 32256	FIBER OPTIC	SEWER	GAS VENT	DOT. 154630V

PROPOSED CROSSING LAYOUT
SCALE = 20.1

INDEX

CONTENTS

SH. NO.		REVISION NO. 1	2	3	4	5	6	T	8	9
I01	INDEX AND REVISIONS	✓								
S01	TRACK AND SIGNAL PLAN	✓								
P01	MINIMUM PROGRAM STEPS REPORT CWE-99	✓								
E01	POWER DISTRIBUTION	✓								
C01	DETECTION DEVICE CONSIST CWE-99	✓								
C02	DETECTION CIRCUITRY CWE-99	✓								
C03	DETECTTON CIRCUITRY CWE-99	✓								
C04	CROSSING WARNING DEVICE GATE CIRCUITRY	✓								
C05	CROSSING WARNING DEVICE LIGHT CIRCUITRY	✓								
C06	CROSSING WARNING DEVICE CIRCUITRY	✓								
C07	SEAR II: CONFIGURATION & FUNCTIONS	✓								

✓ = PLANS SENT TO FIELD (DISTRIBUTED)

✓ = PLANS AS-IN-SERVICED (UP TO DATE)

NEW WORK

SAFETRAN systems

PROJECT #. IL2000010
DES/CHKD BY. MLS/SWS
DATE. 06-23-00

= NOTE

4X.101
REV. 02-29-00

DESIGN DATE	REV. NO.
06-23-00	1

REVISIONS

REV. NO.	PROJECT NO.	DESIGN DATE	IN SERVICE DATE	REVISION DATE
1	IL2000010	06-23-00		

TO BE COMPLETED ON A.I.S.

CSX TRANSPORTATION
RAIL TRANSPORT GROUP ENGINEERING
COMMUNICATIONS AND SIGNALS

DECATUR TO MONTEZUMA
70TH STREET 154630V
INDEX AND REVISIONS
DECATUR, IL M.P. 80-270.99

DESIGNED	DIGITIZED	CHECKED	DATE
SAF/MLS	SAF/MLS	SAF/SWS	06-23-00

DRAWING	SHEET NO	FILE	SHEET
-----	-----	80270099	I01

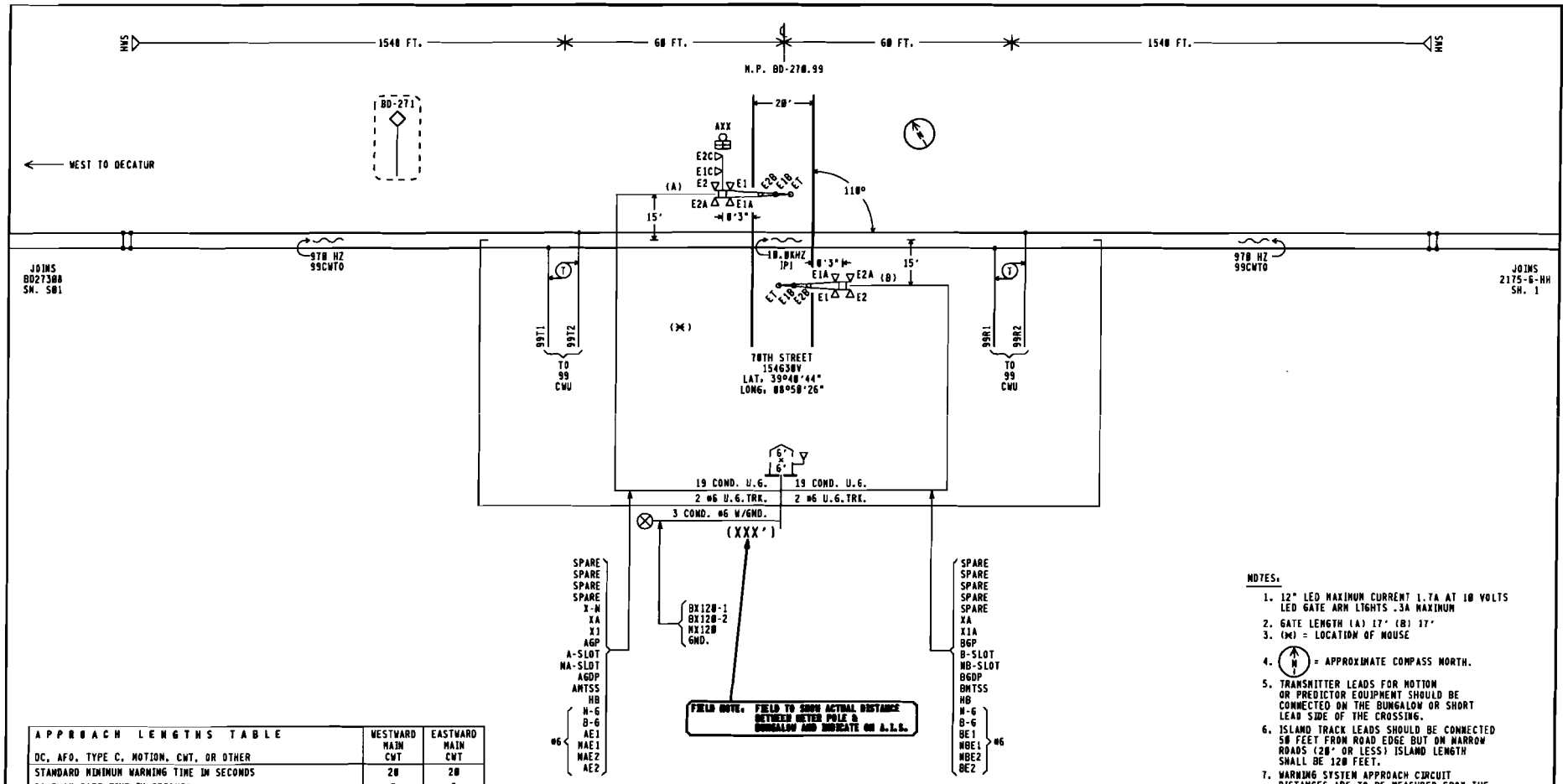

APPROACH LENGTHS TABLE DC, AFO, TYPE C, MOTION, CWT, OR OTHER	WESTWARD MAIN CWT	EASTWARD MAIN CWT
STANDARD MINIMUM WARNING TIME IN SECONDS	20	20
ROADWAY GATE TIME IN SECONDS	5	5
CLEARANCE TIME IN SECONDS	1	1
DOT TRAFFIC LIGHT SIMULTANEOUS PREEMPT TIME IN SECONDS ✱	0	0
DESIGNED WARNING TIME FOR TRAINS AT TIME TABLE SPEED	26 SEC.	26 SEC.
DOT TRAFFIC LIGHT ADVANCE PREEMPT TIME IN SECONDS ✱	0	0
CONTROL EQUIPMENT DECISION TIME IN SECONDS	5	5
DESIGNED DETECTION TIME FOR TRAINS AT TIME TABLE SPEED	31 SEC.	31 SEC.
TIME TABLE MAXIMUM TRAIN SPEED IN MILES PER HOUR	30	30
BUFFER SPEED IN MILES PER HOUR	5	5
TOTAL WARNING SYSTEM DESIGN SPEED IN MILES PER HOUR	35	35
APPROACH DISTANCE TO ISLAND EDGE IN FEET	1540	1540
HALF WIDTH OF ISLAND IN FEET	60	60
APPROXIMATE MILE POSTS FOR APPROACH CIRCUIT	271.29	270.69

✱AUTHORIZING AGENCY. NONE
✱DATE OF REQUIREMENT. NONE
✱AMOUNT OF TIME (SEC.). NONE

NOTES.

1. 12" LED MAXIMUM CURRENT 1.7A AT 10 VOLTS
   LED GATE ARM LIGHTS .3A MAXIMUM
2. GATE LENGTH (A) 17' (B) 17'
3. (✱) = LOCATION OF MOUSE
4. (N) = APPROXIMATE COMPASS NORTH.
5. TRANSMITTER LEADS FOR MOTION OR PREDICTOR EQUIPMENT SHOULD BE CONNECTED ON THE BUNGALOW OR SHORT LEAD SIDE OF THE CROSSING.
6. ISLAND TRACK LEADS SHOULD BE CONNECTED 50 FEET FROM ROAD EDGE BUT ON NARROW ROADS (20' OR LESS) ISLAND LENGTH SHALL BE 120 FEET.
7. WARNING SYSTEM APPROACH CIRCUIT DISTANCES ARE TO BE MEASURED FROM THE ISLAND TRACK CONNECTIONS.

NEW WORK EXCEPT
= EXISTING

SAFETRAN systems

PROJECT #. IL2000010
DES/CHKD BY. NLS/SWS
DATE. 06-23-00

= NOTE

4K.501
REV. 12-22-06

CSX TRANSPORTATION
RAIL TRANSPORT GROUP ENGINEERING
COMMUNICATIONS AND SIGNALS

DECATUR TO MONTEZUMA
70TH STREET 154630V
TRACK AND SIGNAL PLAN
DECATUR, IL N.P. BD-270.99

DESIGNED	DIGITIZED	CHECKED	DATE
SAF/NLS	SAF/NLS	SAF/SWS	06-23-00

DESIGN DATE	REV. NO.	DRAWING	SHEET NO	FILE	SHEET
06-23-00	1	-----	-----	BD27099	501

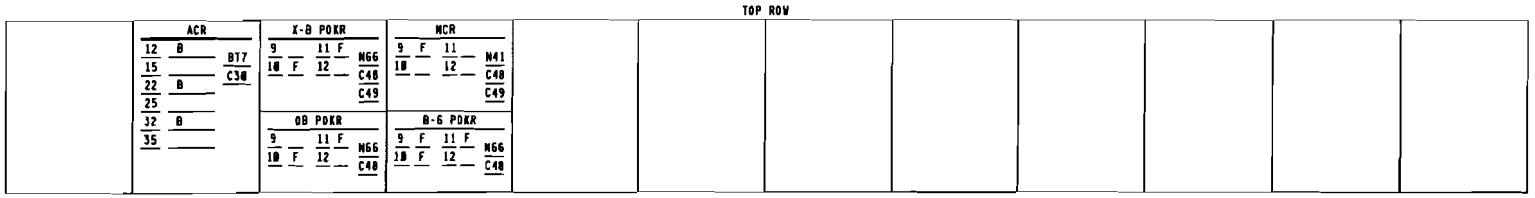

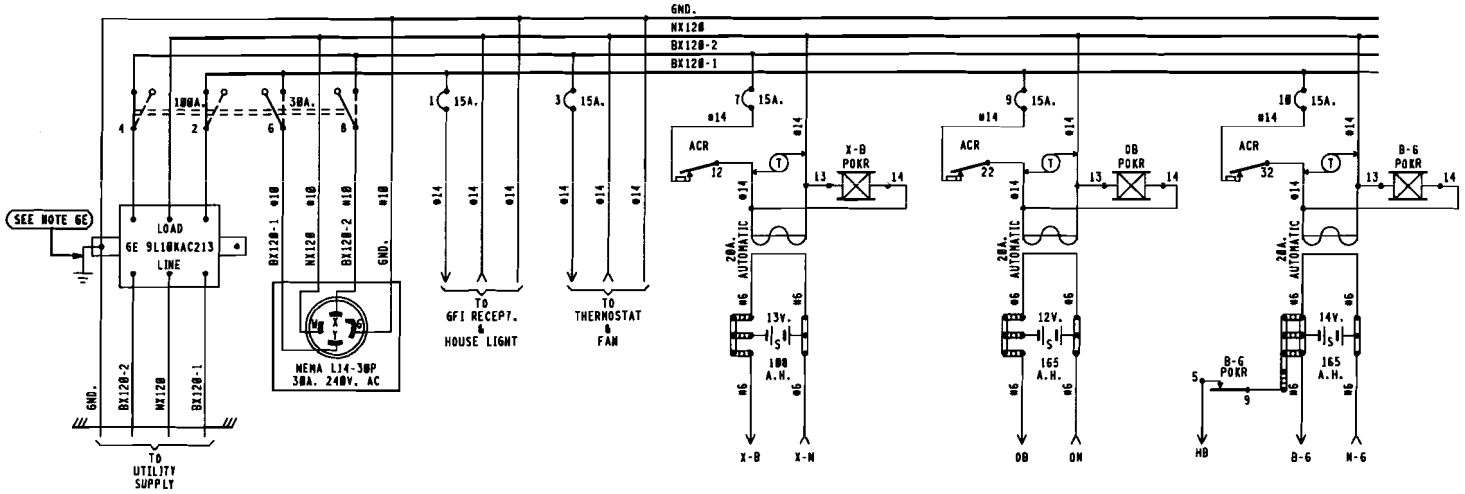

BX120-1	BX120-2
16.0 AMPS	8.0 AMPS

MAXIMUM LOAD
CALCULATED PER SS360

NOTES:

1 - REFERENCES ARE PER SCMS-13.
2 - ARRESTERS ARE PER SS302.
3 - SHELF RELAY PLACEMENT ON CONSIST CHART HAS NO SIGNIFICANCE.
4 - PLUG-IN RELAYS ARE VIEWED FROM THE FRONT OF RACK.
5 - BATTERY A.H. CAPACITY SHOWN IS THE MINIMUM REQUIREMENT.
6 - WIRING
  A - FEED TO ALL BUSSES, LIGHT CIRCUITS,MOTOR CIRCUITS TO BE #10 FLEX.
  B - 120-VOLT FEED FROM ENTRANCE TO POWER BUSS TO BE #10 FLEX.
  C - ALL TRACK WIRES TO BE #10 FLEX.
  D - ALL OTHERS TO BE #16 FLEX UNLESS NOTED.
  E - GROUND WIRE NOT NECESSARY WHEN 6E ARRESTER IS MOUNTED ON GROUND PLANE OR METAL ENCLOSURE AFFIXED DIRECTLY TO BUNGALOW METALLIC STRUCTURAL MEMBER.
7 - CIRCUIT INTERRUPTERS 2 & 4 ARE MECHANICALLY INTERLOCKED WITH CIRCUIT INTERRUPTERS 6 & 8.

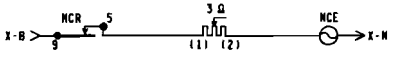

NEW WORK

SAFETRAN systems

PROJECT #: IL2000018
DES/CHKD BY: NLS/SWS
DATE: 06-23-00

= NOTE

4000GCP.E01
REV. 02-29-00

6'X 6' RELAY HOUSE W/FARADAY SHIELD

CSX TRANSPORTATION
RAIL TRANSPORT GROUP ENGINEERING
COMMUNICATIONS AND SIGNALS

DECATUR TO MONTEZUMA
70TH STREET 154630V
POWER DISTRIBUTION
DECATUR, IL N.P. 80-270.99

DESIGNED	DIGITIZED	CHECKED	DATE
SAF/NLS	SAF/NLS	SAF/SWS	06-23-00

DESIGN DATE	REV. NO.	DRAWING	SHEET NO	FILE	SHEET
06-23-00	1	-----	-----	80270.99	E01

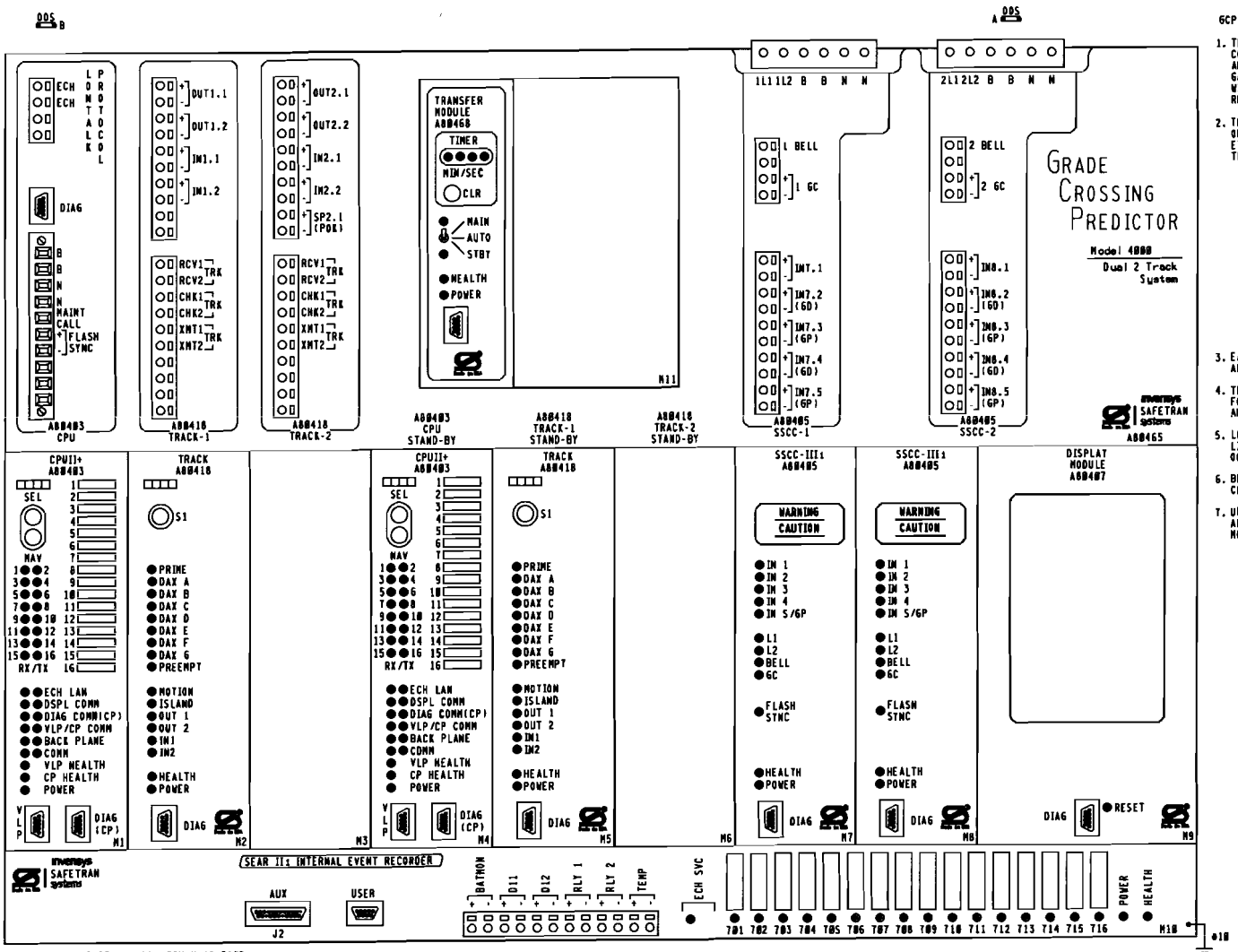

GCP 4000 APPLICATION NOTES.

1. THE GRADE CROSSING PREDICTOR (GCP) IS A MODULAR MICROPROCESSOR CONTROLLED SYSTEM THAT IS DEPLOYED TO CONTINUALLY MONITOR THE APPROACHES TO RAILROAD GRADE CROSSINGS AND TO CONTROL THE LAMPS, GATES AND BELLS ASSOCIATED WITH THOSE CROSSINGS. WHEN EQUIPPED WITH THE SEAR II1 MODULE THE GCP 4000 WILL RECORD EVENTS AND REPORT ALARMS WHEN CONNECTED TO AN OFFICE SYSTEM.

2. THE GCP 4000 GCP (A80465) IS A TWO TRACK REDUNDANT UNIT CAPABLE OF DRIVING 4 INDEPENDENT FLASHER AND GATE SIGNALS AND RECORDING EVENTS AND REPORTING ALARMS. THE STANDARD A80465 INCLUDES THE FOLLOWING MODULES.

SLOT	MODULE	FUNCTION	PART NO.
M1	CPU-II+	MAIN	A80403
M2	TRACK-1	MAIN	A80418
M3	PANEL	NONE	D39325
M4	CPU-II+	STANDBY	A80403
M5	TRACK-1	STANDBY	A80418
M6	PANEL	NONE	D39325
M7	SSCC-III1	A SIGNAL	A80405
M8	SSCC-III1	B SIGNAL	A80405
M9	DISPLAT MODULE		A80407
TOP CENTER	TRANSFER UNIT		A80468
LOWER BAY	SEAR II1	RECORDER	A80418
OPTIONAL MODULES.			A80413
RIO MODULE			

3. EACH TRACK MODULE HAS TWO PROGRAMMABLE INPUTS AND TWO PROGRAMMABLE OUTPUTS.

4. THE SEAR II1 INTERNAL EVENT RECORDER HAS INPUTS FOR ONE BATTERY MONITOR, TWO NON-VITAL INPUTS AND TWO PROGRAMMABLE RELAY DRIVES (HEEL/FRONT).

5. LOCATED ON THE FRONT OF EACH MODULE THERE ARE LED LIGHTS TO INDICATE THE ACTIVITY OF CERTAIN FUNCTIONS OCCURRING INSIDE THE GCP.

6. BETWEEN SLOT 1 & 2 THERE IS A CHASSIS IDENTIFICATION CHIP (CIC) SOCKET AND AN ECD CONNECTOR (DB-25 FEMALE).

7. UPON THE FAILURE OF A MODULE IN SLOTS M1-M3 THE AUTOMATIC TRANSFER UNIT SWITCHES TO THE STANDBY MODULES IN SLOTS M4-M6.

NEW WORK

SAFETRAN systems

PROJECT #. IL2000010
DES/CHKD BY. MLS/SWS
DATE. 06-23-00

CSX TRANSPORTATION

RAIL TRANSPORT GROUP ENGINEERING
COMMUNICATIONS AND SIGNALS

DECATUR TO MONTEZUMA

70TH STREET 154630V

DETECTION DEVICE CONSIST CWE-99
DECATUR, IL M.P. BD-270.99

4K-CHASSIS.DGN
REV. 12-22-06

DESIGNED	DIGITIZED	CHECKED	DATE
SAF/MLS	SAF/MLS	SAF/SWS	06-23-00

DESIGN DATE	REV. NO.	DRAWING	SHEET NO	FILE	SHEET
06-23-00	1	-----	-----	BD27099	C01

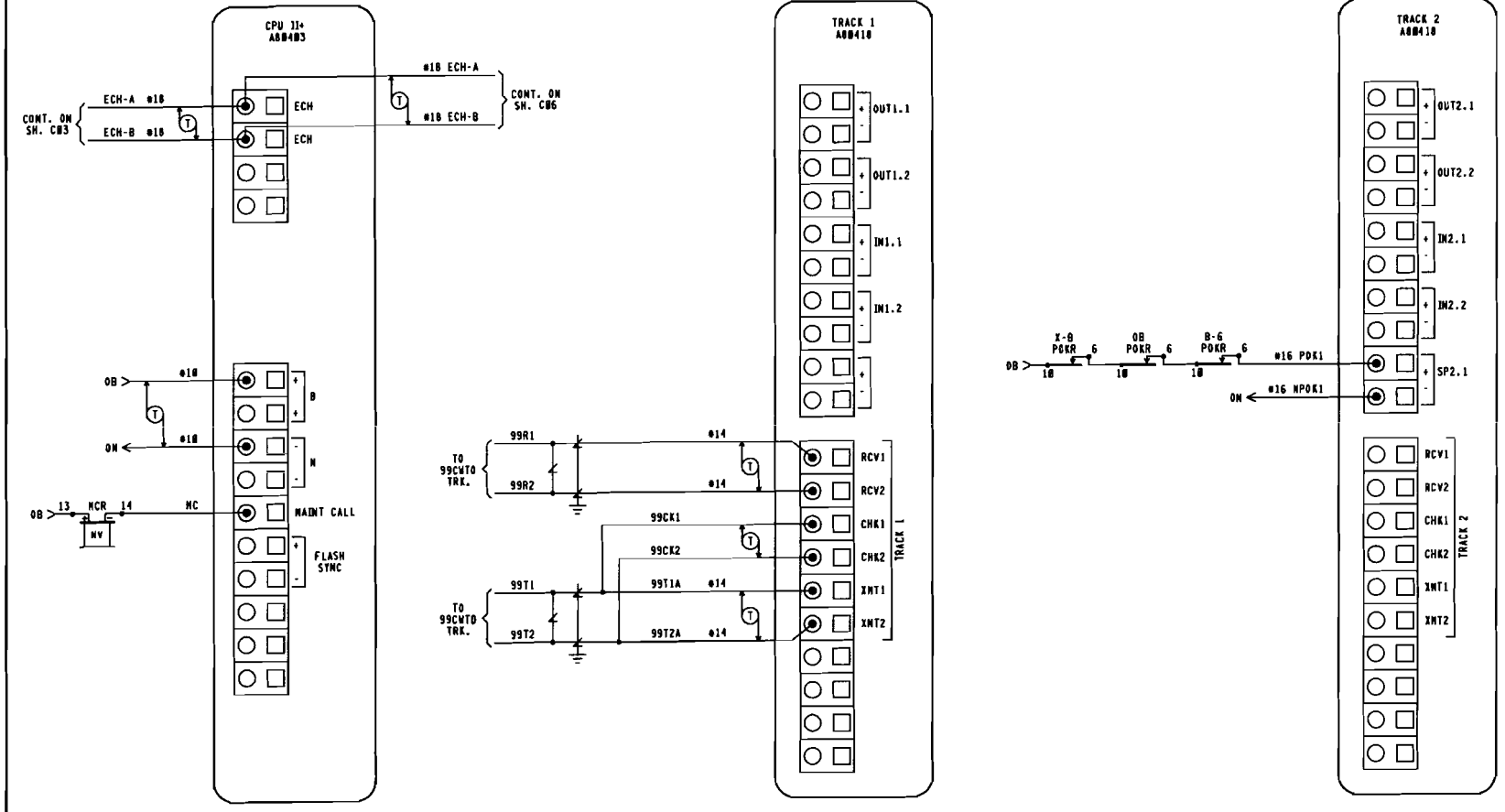

NOTE:

ECHELON CONNECTIONS NOT TO EXCEED 53' IN LENGTH AND TOTAL LENGTH COMBINED NOT TO EXCEED 430' WITH A MAXIMUM OF 8 NODES. RECOMMEND USE BELDEN WIRE CABLE #8461 OR EQUIVALENT.

NEW WORK

SAFETRAN systems

PROJECT #: IL2004818
DES/CHKD BY: NLS/SWS
DATE: 06-23-08

4K-TERMINALS.DGN
REV. 02-29-08

CSX TRANSPORTATION

RAIL TRANSPORT GROUP ENGINEERING
COMMUNICATIONS AND SIGNALS

DECATUR TO MONTEZUMA

70TH STREET LS4038V

DETECTION CIRCUITRY CWE-99

DECATUR, IL N.P. 80-27M.99

DESIGNED	DIGITIZED	CHECKED	DATE
SAF/NLS	SAF/NLS	SAF/SWS	06-23-08

DESIGN DATE	REV. NO.	DRAWING	SHEET NO	FILE	SHEET
06-23-08	1	-----	-----	BD27M99	CB2

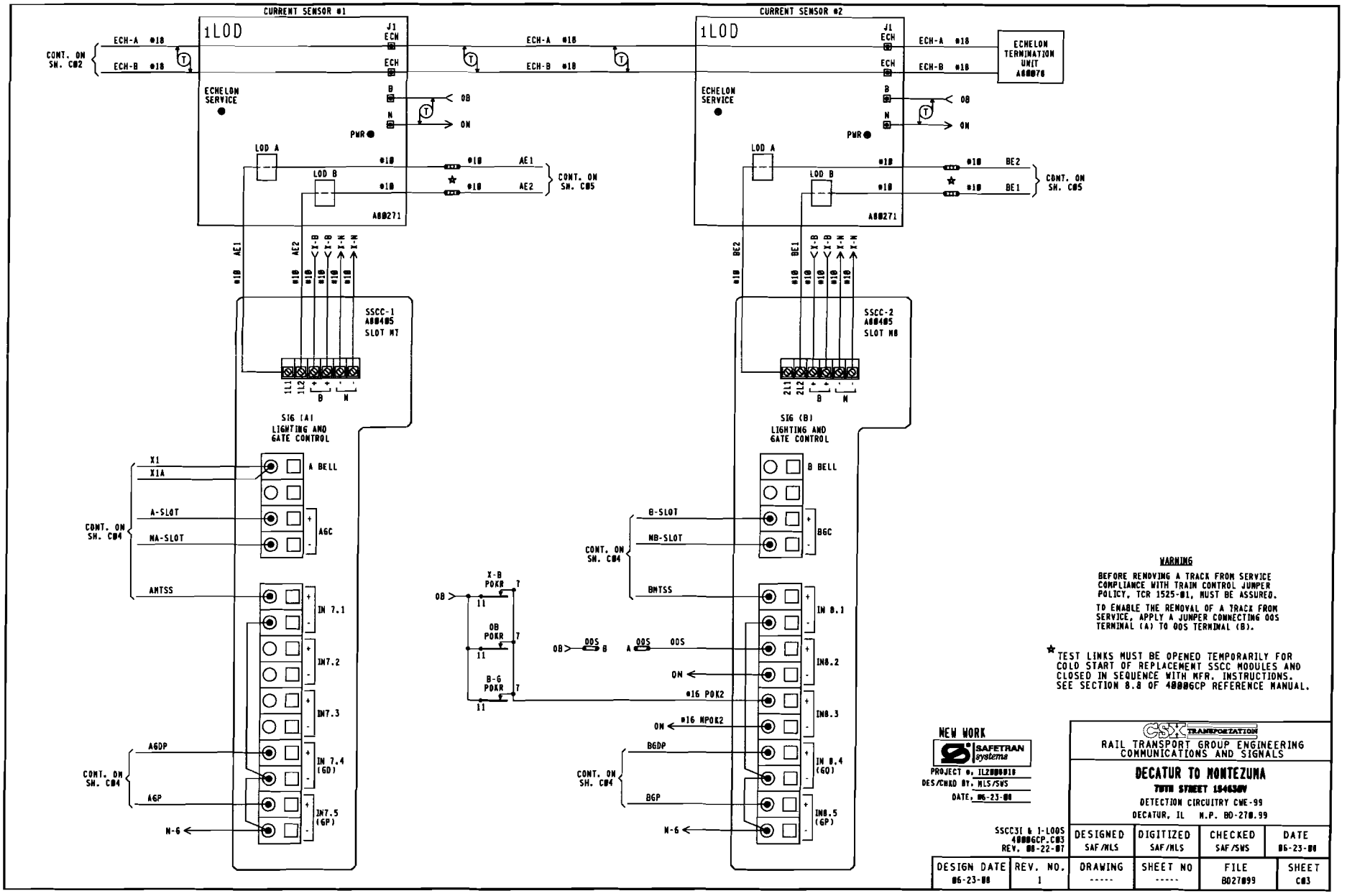

WARNING

BEFORE RENOVING A TRACK FROM SERVICE COMPLIANCE WITH TRAIN CONTROL JUNPER POLICY, TCR 1525-01, NUST BE ASSURED.

TO ENABLE THE RENOVAL OF A TRACK FROM SERVICE, APPLY A JUNPER CONNECTING OOS TERMINAL (A) TO OOS TERMINAL (B).

★ TEST LINKS MUST BE OPENED TEMPORARILY FOR COLD START OF REPLACEMENT SSCC MODULES AND CLOSED IN SEQUENCE WITH MFR. INSTRUCTIONS. SEE SECTION 8.8 OF 40006CP REFERENCE MANUAL.

NEW WORK

SAFETRAN systems

PROJECT #. ILZ000010
DES/CHKD BY. NLS/SWS
DATE. 06-23-00

CSX TRANSPORTATION
RAIL TRANSPORT GROUP ENGINEERING
COMMUNICATIONS AND SIGNALS

DECATUR TO MONTEZUMA

70TH STREET 194636V

DETECTION CIRCUITRY CWE-99

DECATUR, IL M.P. B0-270.99

SSCC3I & 1-LOOS
40006CP.C03
REV. 00-22-07

DESIGNED	DIGITIZED	CHECKED	DATE
SAF/NLS	SAF/NLS	SAF/SWS	06-23-00

DESIGN DATE	REV. NO.	DRAWING	SHEET NO	FILE	SHEET
06-23-00	1	-----	-----	B027099	C03

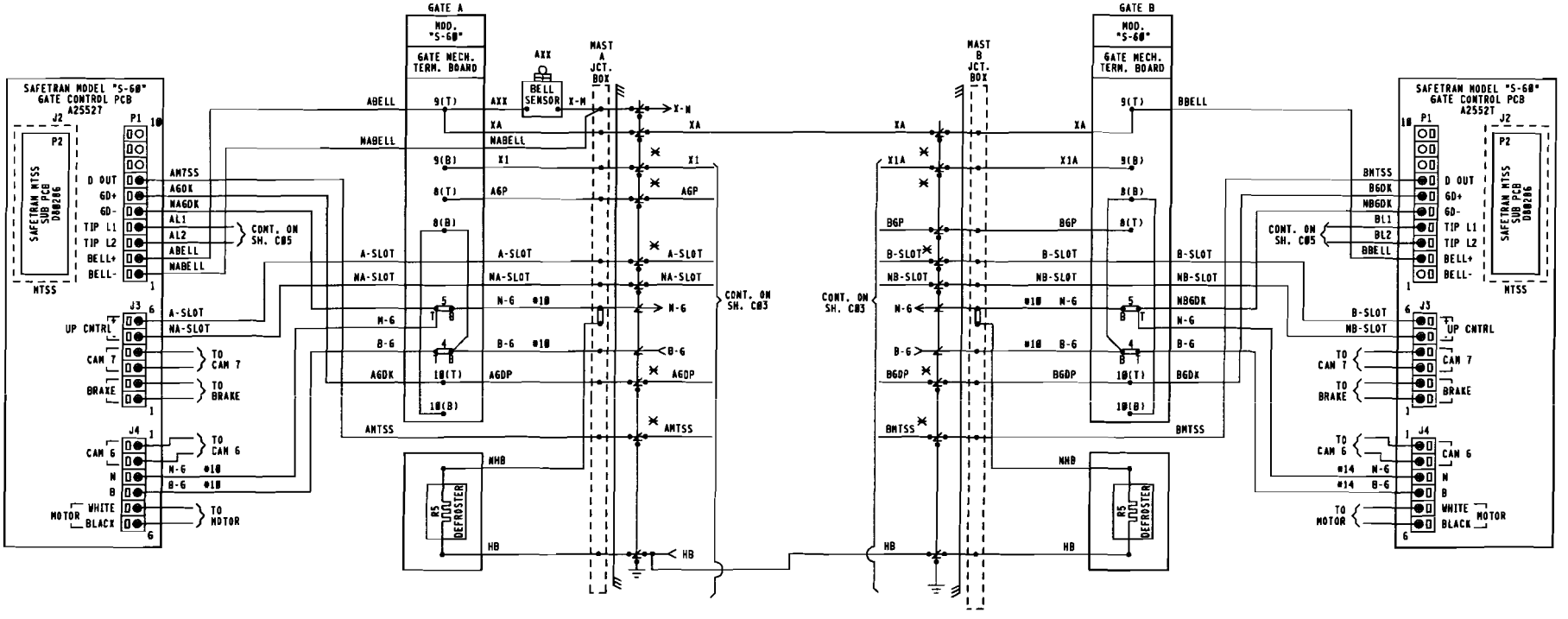

NOTES:
1. ✕ = TEST LINKS MUST BE OPEN TEMPORARILY FOR COLD START OF REPLACEMENT SSCC MODULES AND AND CLOSED IN SEQUENCE WITH MFR. INSTRUCTIONS. SEE SECTION 8.8 OF 4000GCP REFERENCE MANUAL.
2. = TERMINAL IN JCT. BOX BASE
3. ALL WIRING #16 UNLESS NOTED OTHERWISE.

NEW WORK

SAFETRAN systems

PROJECT #: IL2000010
DES/CHKD BY: NLS/SWS
DATE: 06-23-00

CSX TRANSPORTATION
RAIL TRANSPORT GROUP ENGINEERING
COMMUNICATIONS AND SIGNALS

DECATUR TO MONTEZUMA

70TH STREET 154630V

CROSSING WARNING DEVICE GATE CIRCUITRY
DECATUR, IL N.P. BD-270.99

560 GATE WIRING.C04A
REV 09-05-07

DESIGNED	DIGITIZED	CHECKED	DATE
SAF/NLS	SAF/NLS	SAF/SWS	06-23-00

DESIGN DATE	REV. NO.	DRAWING	SHEET NO	FILE	SHEET
06-23-00	1	-----	-----	BD27099	C04

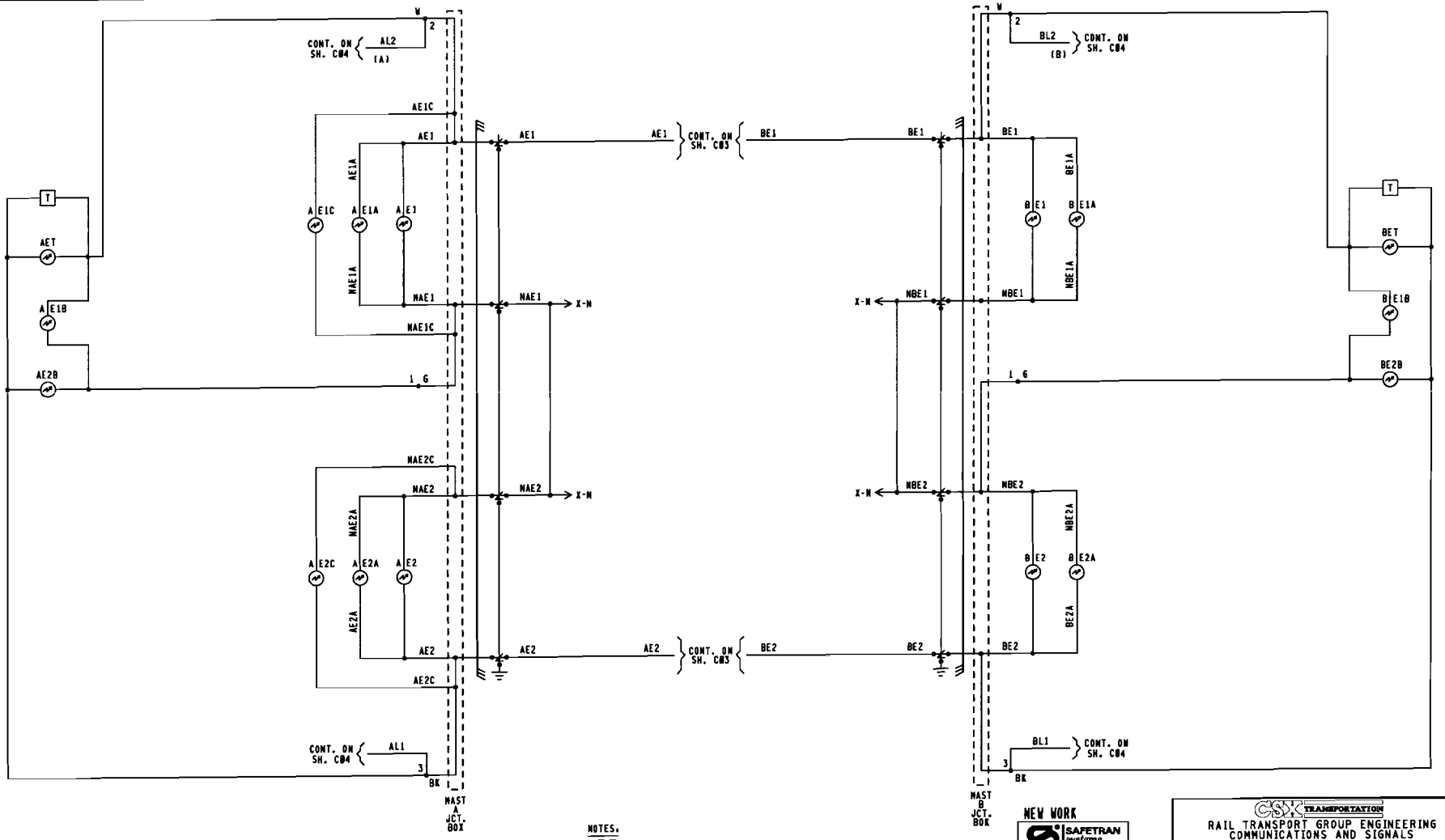

NOTES:

1. [ ] = TERMINAL IN JUNCTION BOX
2. WHEN 7 OR MORE LIGHTS ON A SINGLE STRUCTURE REFER TO SS302 FOR REQUIRED ARRESTERING
3. FEEDS TO ALL BUSSES AND LIGHT CIRCUITS ARE #10 FLEX
4. UNLESS NOTED ALL OTHER WIRING #16
5. CABLING SPECIFICATIONS SHOWN ON SH. S01
6. [T] = TIP SENSOR

NEW WORK

SAFETRAN systems

PROJECT #. IL2000018
DES/CHKD BY. MLS/SWS
DATE. 06-23-00

CSX TRANSPORTATION
RAIL TRANSPORT GROUP ENGINEERING
COMMUNICATIONS AND SIGNALS

DECATUR TO MONTEZUMA

70TH STREET 154630V

CROSSING WARNING DEVICE LIGHT CIRCUITRY
DECATUR, IL M.P. BD-270.99

4K-LAMP WIRING.DGN
REV. 02-29-00

DESIGNED	DIGITIZED	CHECKED	DATE
SAF/MLS	SAF/MLS	SAF/SWS	06-23-00

DESIGN DATE	REV. NO.	DRAWING	SHEET NO	FILE	SHEET
06-23-00	1	-----	-----	BD27099	C05

WAYSIDE ACCESS GATEWAY CONFIGURATION	
SITE ATCS ADDRESS	7.125.472.002.07.01 T.125.LLL.666.SS.00
SERIAL INTERFACE	38,400,NONE,8,1/NOFLOW
SERIAL FORMAT	RAW
WAG TEST MODE	DISABLED
ECHELON ADDRESS	01.07
UDP PORTS	5000, 5001, 5002, 5003
ROUTE TABLE EXPIRY	5400 SEC
BROADCAST MEDIUM	IP ETHERNET
TCP PORTS	23, 10023, 6001, 6002
DHCP SERVER	DISABLED
IP ADDRESS	192.168.13.1
TYPE T ROUTE LENGTH	12--7RRLLL666SS
IP NETWORK MASK	255.255.255.0
WAG CIRCUIT ID	DISABLE
ROUTING REGION DOMAIN 1	OC6SERVER1.JAX.COM
ATCS SERVER UDP PORT NUMBER	6001
TELNET NUMBERS	WAG 6002, SERIAL 10023
DEFAULT GATEWAY IP	192.168.013.031

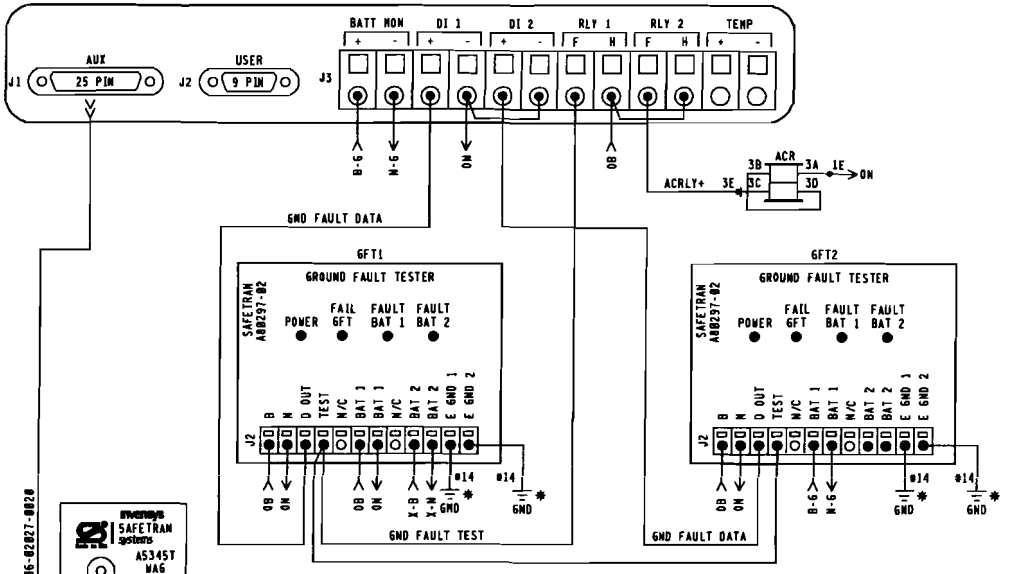

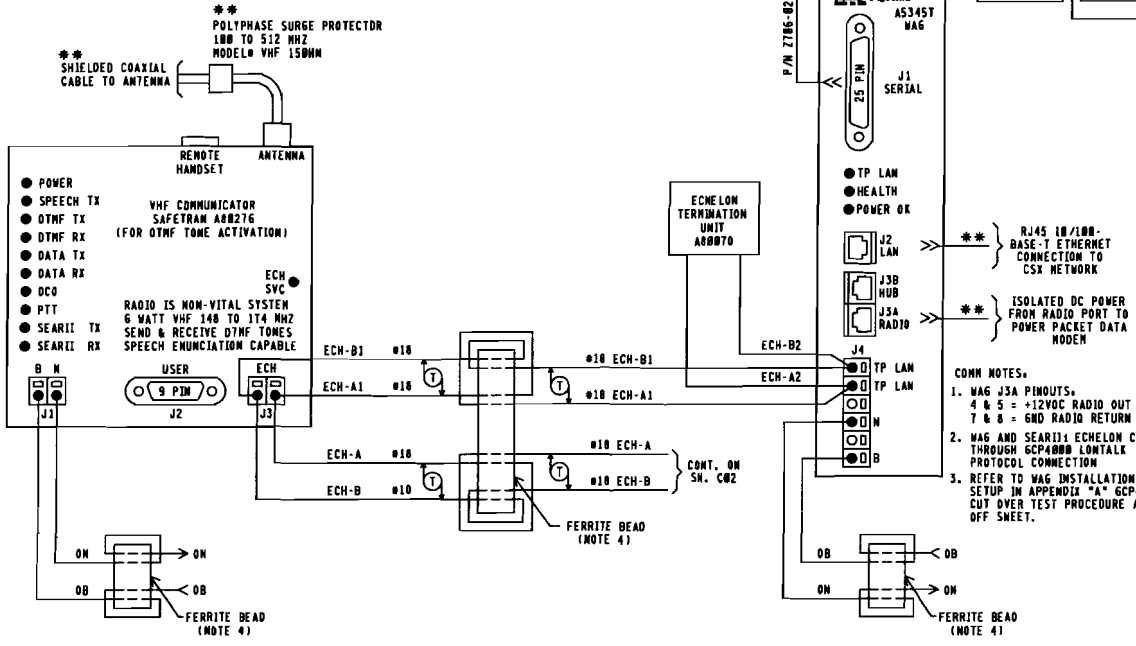

COMM NOTES:

1. WAG J3A PINOUTS:
   4 & 5 = +12VDC RADIO OUT
   7 & 8 = GND RADIO RETURN
2. WAG AND SEARII: ECHELON COMM THROUGH GCP4000 LONTALK PROTOCOL CONNECTION
3. REFER TO WAG INSTALLATION AND SETUP IN APPENDIX "A" GCP4000 SYSTEM CUT OVER TEST PROCEDURE AND CHECK OFF SHEET.

GCP PROGRAMMING FOR VHF RADIO

REMOTE DTMF CROSSING ACTIVATION (ACTIVATES ENTIRE CROSSING)	
TO ACTIVATE PRESS:	6300
TO DE-ACTIVATE PRESS:	6300+
(ACTIVATION WILL TIME OUT AFTER 60 SEC.)	
REMOTE DTMF LIGHTING ACTIVATION (ACTIVATES FLASHING LIGHTS ONLY)	
TO ACTIVATE PRESS:	6301
TO DE-ACTIVATE PRESS:	6301+
(ACTIVATION WILL TIME OUT AFTER 60 SEC.)	

NOTES:

1. ALL WIRING #16 UNLESS NOTED OTHERWISE.
2. * = EARTH GROUND REF. TERMINALS REQUIRED FOR DETECTION. DO NOT JUMPER TERMINALS. MUST BE CONNECTED TO DIFFERENT POINTS OF BUNGALOW.
3. ** = TO BE PROVIDED BY COMMUNICATIONS
4. LOOP WIRE THROUGH FERRITE BEAD TWICE.

NEW WORK

SAFETRAN systems

PROJECT #: IL2006010
DES/CHKD BY: MLS/SWS
DATE: 06-23-00

CSX TRANSPORTATION

RAIL TRANSPORT GROUP ENGINEERING
COMMUNICATIONS AND SIGNALS

DECATUR TO MONTEZUMA

70TH STREET 154630V

CROSSING WARNING DEVICE CIRCUITRY

DECATUR, IL M.P. BD-270.99

4000GCP.C06
REV. 02-29-00

DESIGN DATE	REV. NO.	DRAWING	SHEET NO	FILE	SHEET
06-23-06	1	-----	-----	BD27099	C06

DESIGNED	DIGITIZED	CHECKED	DATE
SAF/MLS	SAF/MLS	SAF/SWS	06-23-00

	DEFAULTS AND/OR STYLE	FIELD RECORD
SEAR II: EXECUTIVE PROGRAM	VERSION: 9V725A01	VERSION: _____
APPLICATION PROGRAM (IF LOADED)	VERSION: 9V864A01	VERSION: _____

NOTE TO INSPECTOR: AT IN SERVICE OF SEAR II: OR UPDATE OF ITS INTERNAL EXECUTIVE PROGRAM OR ITS CSXT APPLICATION PROGRAM, THE VERSION NUMBER OF EACH PROGRAM MUST BE INSERTED IN THE BLANK FIELDS.

SITE SET UP PROCEDURE	
FUNCTION	LED DISPLAY
DATE/TIME	XX-XX-XXXX XX:XX:XX
AUTOMACTIC DST ADJUSTMENT	YES
TIME ZONE	EASTERN
SITE NAME	70TH STREET
MILEPOST	BD-270.99
DOT NUMBER	154630V
TESTER TYPE	CROSSING
DATE FORMAT	MM-DD-YYYY
TEMP FORMAT	FAHRENHEIT
INDICATE HOLD (SEC)	0
SITE TYPE	COLLECTOR
SITE ATCS ADDRESS	7.125.472.002.99.01 (7.RRR.LLL.666.99.01)
POLL ID	1
OFFICE ADDRESS	2.125.00.0000 (2.RRR.NN.DDDD)
FIELD COMM. DEVICE	VHF COMM. (ECHELON)
MODE	GEN/ATCS
WANS XID	ENABLED
OFFICE COMM. DEVICE	WAG (ECHELON)
USER PORT BAUD	9600
USER PORT DATA BITS	8
USER PORY PARITY	NONE
USER PORT STOP BITS	1
USER PORT FLOW CONTROL	NONE
AUX PORT BAUD	38,400
AUX PORT DATA BITS	8
AUX PORT PARITY	NONE
AUX PORT STOP BITS	1
AUX PORT FLOW CONTROL	NONE
COMM PORT BAUD	9600
COMM PORT DATA BITS	8
COMM PORT PARITY	NONE
COMM PORT STOP BITS	1
COMM PORT FLOW CONTROL	NONE

INSPECTOR NOTE.
CURRENT VALUES MAY VARY DEPENDANT ON FIELD CONDITIONS. MARK UP PER ACTUAL READINGS FOR IN-SERVICE REVISION.

LIT BULB COUNT ON EACH CIRCUIT	NO.	TYPE OF BULB	CURRENT READING IN AMP. AT APPROX. 10.0 V ARRAY VOLTAGE
CURRENT SENSOR (1) AE1, LAMP SET UP	5	☐BULBS ■LED	5.7
CURRENT SENSOR (1) AE2, LAMP SET UP	5	☐BULBS ■LED	5.7
CURRENT SENSOR (2) BE1, LAMP SET UP	4	☐BULBS ■LED	4.0
CURRENT SENSOR (2) BE2, LAMP SET UP	4	☐BULBS ■LED	4.0

VHF RADIO CHANNELS			
1	161.130	5	161.550
2	160.730	6	160.705
3	160.560	7	160.705
4	160.060	8	160.705

NOTE 9

MENU → CONFIGURATION	
MODULE TYPE	WAG
MODULE NAME	DEFAULT
WAG ECHELON MODE	7

MEASURE BATTERY VOLTAGE AT INPUT		
BATTERY VOLTAGE	0B	_____ VOLTS
BATTERY VOLTAGE	X-B	_____ VOLTS
BATTERY VOLTAGE	B-G	_____ VOLTS

NOTE.
REFER TO WAG INSTALLATION AND SETUP IN APPENDIX "A" GCP4000 SYTEM CUT OVER, TEST PROCEDURE AND CHECK OFF SHEET.

	CONTROL SYSTEM CONFIGURATION MENU QUESTIONS	
	OPTION	SELECTION
NOTE 1	RESET NAMES AND MODULES*	YES ☐ NO ☐
	RAILROAD NUMBER	125
	ENTRANCE GATES*	0 ☐ 1 ☐ 2 ■ 3 ☐ 4 ☐ 5 ☐ 6 ☐ 7 ☐ 8 ☐
NOTE 2	EXIT GATES*	0 ■ 1 ☐ 2 ☐ 3 ☐ 4 ☐
	GATE POSITION FAIL*	20 SECS.
	BATTERY BANKS*	1 ☐ 2 ■ 3 ☐
	BATT MON USED*	NO ☐ YES ■
	INTERNAL CROSSING CONTROLLERS*	0 ☐ 1 ☐ 2 ■
	EXTERNAL CROSSING CONTROLLERS*	0 ■ 1 ☐ 2 ☐
NOTE 3	VHF COMMUNICATOR*	YES ■ NO ☐
	ACTIVATION CODE	630
	ACTIVATION TIMEOUT	(60 SEC)
	iLOD MODULES*	0 ☐ 1 ☐ 2 ■ 3 ☐ 4 ☐
NOTE 4	ANY LED BULBS USED*	NO ☐ YES ■
	AUTO INSPECTIONS*	YES ■ NO ☐
NOTE 5	BELL SENSOR*	0 ☐ 1 ■ 2 ☐ 3 ☐ 4 ☐
	BELL SENSOR TSS 1*	NO ☐ YES ■
	BELL SENSOR TSS 2*	NO ■ YES ☐
	BELL SENSOR TSS 3*	NO ■ YES ☐
	BELL SENSOR TSS 4*	NO ■ YES ☐
	BELL SENSOR TSS 5*	NO ■ YES ☐
	BELL SENSOR TSS 6*	NO ■ YES ☐
	BELL SENSOR TSS 7*	NO ■ YES ☐
	BELL SENSOR TSS 8*	NO ■ YES ☐
	BELL ON*	GATES LOWERING ■ GATES MOVING ☐ ALWAYS ☐
	GFT'S	YES ■ NO ☐
	BATTERIES ON GFT1	1 ☐ 2 ■
NOTE 6	GATE TIP SENSORS*	YES ■ NO ☐
	RTU	NO ■ YES ☐
NOTE 7	VHF VOICE CHANNEL	1 ☐ 2 ☐ 3 ☐ 4 ☐ 5 ☐ 6 ☐ 7 ☐ 8 ☐
	DATA CHANNEL	1 ☐ 2 ☐ 3 ☐ 4 ☐ 5 ☐ 6 ☐ 7 ☐ 8 ☐
	FULL APPROACH MOVE ALARMS*	ACTIVATED ■ DO NOT ACTIVATE ☐

NOTE 8

EDIT DIGITAL INPUTS	■ NO	☐ YES
EDIT BATTERIES	■ NO	☐ YES
EDIT RELAYS	■ NO	☐ YES
EDIT INDICATOR LEDS	■ NO	☐ YES
EDIT TEST LED'S	■ NO	☐ YES
EDIT TLOD SENSOR	■ NO	☐ YES
EDIT VHF SETTINGS	■ NO	☐ YES

NOTES.

1. SELECT YES ON INITIAL SET-UP.
2. OPTION AVAILABLE IF GATES = YES
3. OPTION AVAILABLE IF VHF COMMUNICATOR = YES LAST 3 DIGITS OF DOT NUMBER.
4. OPTION AVAILABLE IF iLODS.
5. OPTION AVAILABLE IF BELL SENSORS.
6. OPTION AVAILABLE IF GATES.
7. OPTION AVAILABLE IF VHF RADIO.
8. ONLY YES IN SPECIAL CIRCUMSTANCES.
9. SELECT "MENU" THEN "CONFIGURATION" FROM SEAR II INTERFACE KEYPAD TO ACCESS MODULE CONFIGURATION MENU.

NEW WORK

SAFETRAN systems

PROJECT #: IL2000010
DES/CHKD BY: NLS/SWS
DATE: 06-23-00

◯ = NOTE

4000GCP.CDT
REV. 10-26-06

CSX TRANSPORTATION
RAIL TRANSPORT GROUP ENGINEERING
COMMUNICATIONS AND SIGNALS

DECATUR TO MONTEZUMA
70TH STREET 154630V
SEAR II: CONFIGURATION & FUNCTIONS
DECATUR, IL M.P. BD-270.99

DESIGNED	DIGITIZED	CHECKED	DATE
SAF/NLS	SAF/NLS	SAF/SWS	06-23-00

DESIGN DATE	REV. NO.	DRAWING	SHEET NO	FILE	SHEET
06-23-00	1	-----	-----	BD27099	C07

Minimum Program Steps Report

Location and SIN

DOT Number: 154630V
Milepost Number: BD-270.99
Site Name: 70th Street

SIN: 712547200216 *

* Parameter is part of office check number calculation.

MCF and Template Selection

MCF Name: GCP-T6X-01-2.mcf
MCF Revision: 012
MCFCRC: 0DFE7A0C

Template = 1A.6 Trk B1 *

* Parameter is part of office check number calculation.

Minimum Program Steps

TEMPLATE: track 1-B1, Island
Track 1 : GCP Frequency = 970 Hz
Track 1 : Approach Distance = 1540 ft (See Plans)
Track 1 : Prime Warning Time = 26 sec *
Track 1 : GCP Transmit Level = Medium (Set in Field)
Track 1 : Isl Frequency = 10.0 kHz

TEMPLATE: SSCC
SSCC-1 Number of GDs = 1 *
SSCC-2 Number of GPs = 1 *
SSCC-2 Number of GDs = 1 *

TEMPLATE: IP assignment SSCC
IN 7.2 = Not Used *
IN 8.2 = Out Of Service IP 1 *
IN 8.4 = GD 2.1 *
IN 8.5 = GP 2.1 *

TEMPLATE: SEAR
SP 3.1 = Not Used *

GCP: track 1
Track 1 : Island Distance = 120 ft *

ADVANCED: out of service
OOS Control = Display+OOS IPs *

ADVANCED: site options
Daylight Savings = On *

SSCC: 1
SSCC-1 Gate Delay = 5 sec *
SSCC 1 : Flash Rate = 55 *
SSCC 1 : Lamp Neutral Test = Off *

SSCC: 2
SSCC-2 Gate Delay = 5 sec *
SSCC 2 : Flash Rate = 55 *
SSCC 2 : Lamp Neutral Test = Off *

SEAR
DI 1 = Gnd Flt Tester 1 *
DI 2 = Gnd Flt Tester 2 *
Rly 1 = Ground Fault Test *
Rly 2 = AC Control *

SEAR: slot 7-8 inputs
IN 7.1 = TSS 1 *
IN 8.1 = TSS 2 *
IN 8.3 = POK 2 *

* Parameter is part of office check number calculation.

Check Numbers

Office Check No. (DT 4.6.0): 1D4397E3
Office Check Number: 1D4397E3
Config. Check Number: 3140085E
(Based on MCF Revision 012)

Parameters not part of office check number calculation:

Track 1 : GCP Frequency = 970 Hz
Track 1 : Approach Distance = 1540 ft (See Plans)
Track 1 : GCP Transmit Level = Medium (Set in Field)
Track 1 : Isl Frequency = 10.0 kHz

NEW WORK
SAFETRAN systems
PROJECT #: 1L2000010
DES/CHKD BY: MLS/SWS
DATE: 06-23-00

4000GCP.P01
REV. 01-28-00

CSX TRANSPORTATION
RAIL TRANSPORT GROUP ENGINEERING
COMMUNICATIONS AND SIGNALS

DECATUR TO MONTEZUMA
70TH STREET 154630V
MINIMUM PROGRAM STEPS REPORT CWE-99
DECATUR, IL M.P. BD-270.99

DESIGN DATE	REV. NO.	DRAWING	SHEET NO	FILE	SHEET
06-23-00	1	-----	-----	BD27099	P01

DESIGNED	DIGITIZED	CHECKED	DATE
SAF/MLS	SAF/MLS	SAF/SWS	06-23-00

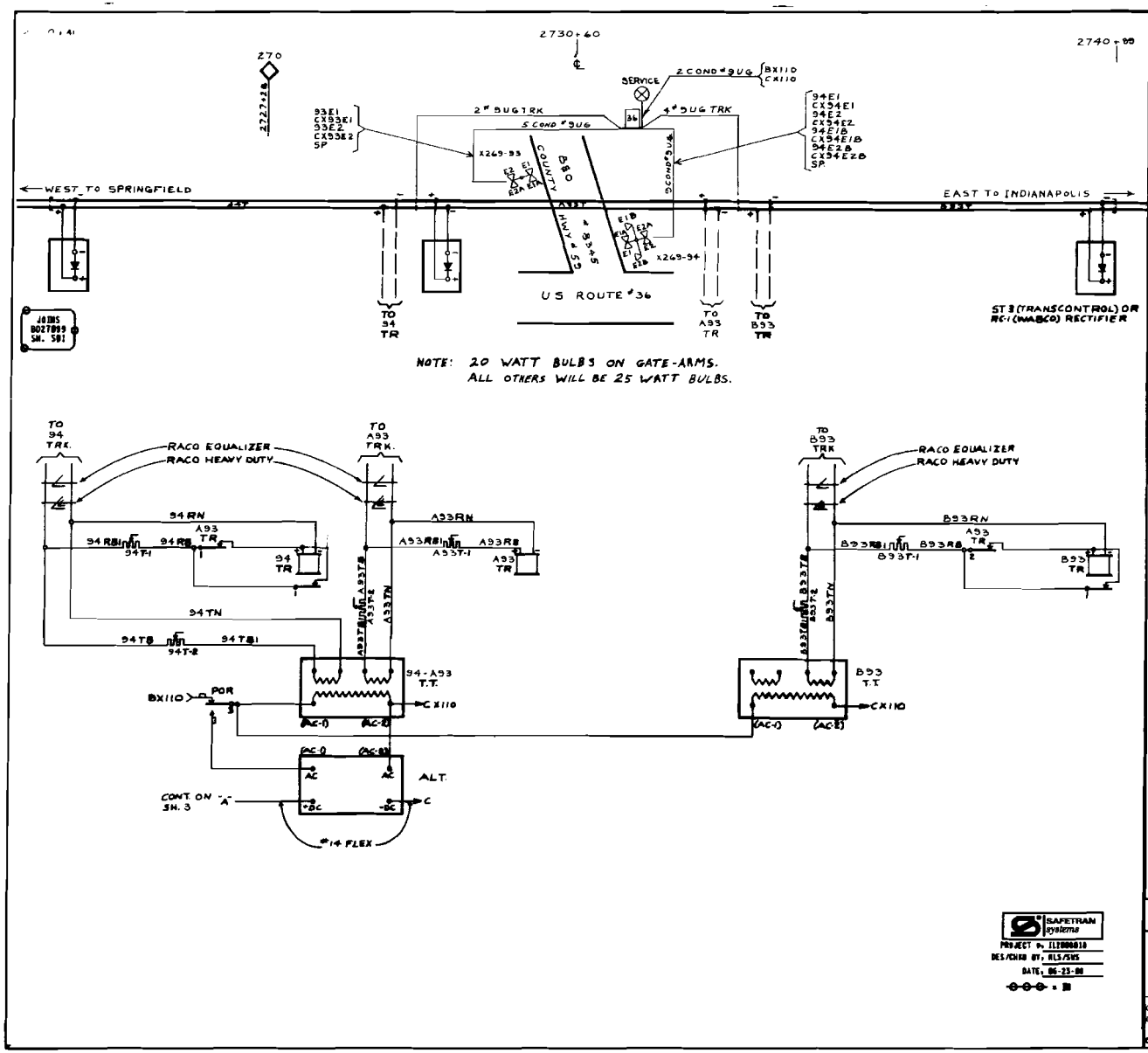

REVISIONS

1-17-74 REF. ... JEW 9-7-73

5-31-90 SAFE.

THE CHESAPEAKE AND OHIO RAILWAY CO
THE BALTIMORE AND OHIO RAILROAD CO

CASNER, ILL.
FLASHING LIGHT SIGNALS
AT COUNTY HWY
BEO CROSSING

DATE 12-5-72
DRAWN PDF
SHEET NO. 1
CHECKED WHP
NEXT SH. 2
2175-6-HH

S2011040✓

INDEX

CONTENTS

SH. NO.		REVISION NO. 1	2	3	4	5	6	7	8	9
IN1	INDEX AND REVISIONS	X	Ø							
S01	TRACK PLAN	X	Ø							
E01	POWER DISTRIBUTION	X								
C01	CROSSING DETECTION CIRCUITRY	X								
C02	CROSSING WARNING DEVICE CIRCUITRY	X								
C03	RECORDER CIRCUITS	X	Ø							

/ = PLANS SENT TO FIELD (DISTRIBUTED)

X = PLANS AS-IN-SERVICED (UP TO DATE)

REVISIONS

1	03-15-03 SWE		IL2001026
2	IL2000018	06-23-00	

TO BE COMPLETED ON A.I.S.

SAFETRAN systems

PROJECT #: IL2000018

DES/CHKD BY: HLS/SVS

DATE: 06-23-00

= IN

= NOTE

CSX TRANSPORTATION

RAIL TRANSPORT GROUP ENGINEERING
COMMUNICATIONS AND SIGNALS

MONTEZUMA TO DECATUR

DECATUR, IL

INDEX AND REVISIONS

AIRPORT RD. (CR 33), 154 635E, MP. BD-273.00

DESIGNED	DIGITIZED	CHECKED	DATE
SWE/JLB	SWE/DRC	SWE/MJH	09-21-01

DRAWING	SHEET NO	NEXT SH	NEXT FILE	NEXT SH	FILE	SHEET
2175-6-Q	1	1-1	BD27300	S01	BD27300	IN1

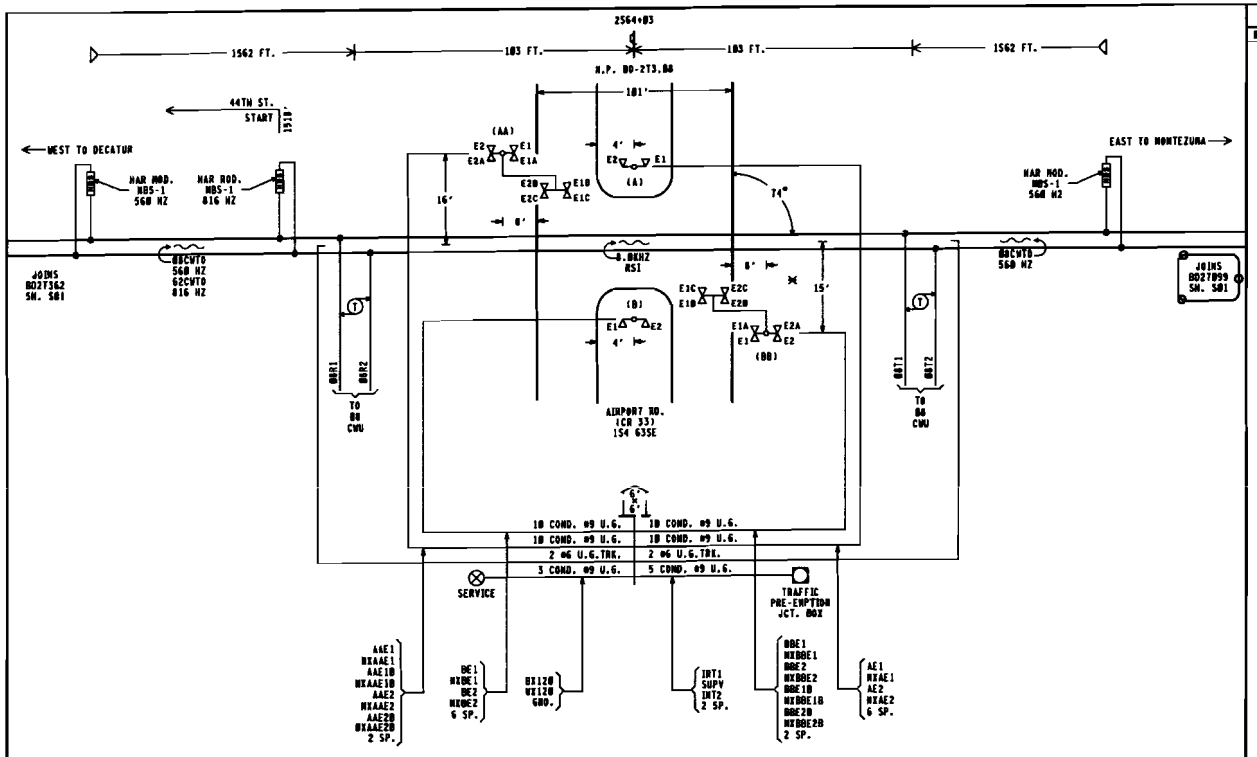

APPROACH LENGTHS TABLE DC, AFO, TYPE C, MOTION, CWT, OR OTHER	WESTWARD TRACK 1 MOT	EASTWARD TRACK 1 MOT
STANDARD MINIMUM WARNING TIME	20	20
ROADWAY GATE TIME	0	0
CLEARANCE TIME	1	1
DOT TRAFFIC LIGHT SIMULTANEOUS PREEMPT TIME *	7	7
DESIGNED WARNING TIME FOR TRAINS AT TIME TABLE SPEED	27	27
DOT TRAFFIC LIGHT ADVANCE PREEMPT TIME *	0	0
CONTROL EQUIPMENT DECISION TIME	3	3
DESIGNED DETECTION TIME FOR TRAINS AT TIME TABLE SPEED	30	30
TIME TABLE MAXIMUM TRAIN SPEED IN MILES PER HOUR	30	30
BUFFER SPEED IN MILES PER HOUR	5	5
TOTAL WARNING SYSTEM DESIGN SPEED	35	35
APPROACH DISTANCE TO ISLAND EDGE IN FEET	1562	1562
HALF WIDTH OF ISLAND IN FEET	$50 + \frac{105}{2}$	$50 + \frac{105}{2}$
APPROXIMATE MILE POSTS FOR APPROACH CIRCUIT	272.70	273.37

*AUTHORIZING AGENCY, IL.CC
*DATE OF REQUIREMENT, 09-19-01
*AMOUNT OF TIME (SEC.), 7 SEC.

NOTE: 1. 20 WATT BULBS ON GATE ARMS.
ALL OTHERS TO BE 25 WATT BULBS.
2. CANT LENGTH (AA) 20' (BB) 20'
3. ⊠ = LOCATION OF HOUSE
4. (N) = APPROXIMATE COMPASS NORTH.
5. THE TRANSMITTER LEADS FOR MOTION OR PREDICTOR EQUIPMENT SHOULD BE CONNECTED ON THE BUNGALOW OR SHORT LEAD SIDE OF THE CROSSING.
6. ISLAND TRACK LEADS SHOULD BE CONNECTED 50 FEET FROM ROAD EDGE BUT ON NARROW ROADS (20' OR LESS) ISLAND LENGTH SHALL BE 120 FEET.
7. WARNING SYSTEM APPROACH CIRCUIT DISTANCES ARE TO BE MEASURED FROM THE ISLAND TRACK CONNECTIONS.

SAFETRAN systems
PROJECT #. IL2000010
DES/CHKD BY. MLS/SWS
DATE. 06-23-00

REVISIONS

03-19-03 SWE	IL2001026

CSX TRANSPORTATION
RAIL TRANSPORT GROUP ENGINEERING
COMMUNICATIONS AND SIGNALS

MONTEZUMA TO DECATUR

DECATUR, IL
TRACK PLAN
AIRPORT RD. (CR 33), 154 635E, MP. BD-273.86

DESIGNED	DIGITIZED	CHECKED	DATE
SWE/JLB	SWE/DRC	SWE/MJH	09-21-01

DRAWING	SHEET NO	NEXT SH	NEXT FILE	NEXT SH	FILE	SHEET
2175-6-Q	1-1	1-2	BD27386	E01	BD27386	S01

RECORDER TERMINAL BOARD

SMART EVENT RECORDER HARMON MODEL DMER2-CSX2

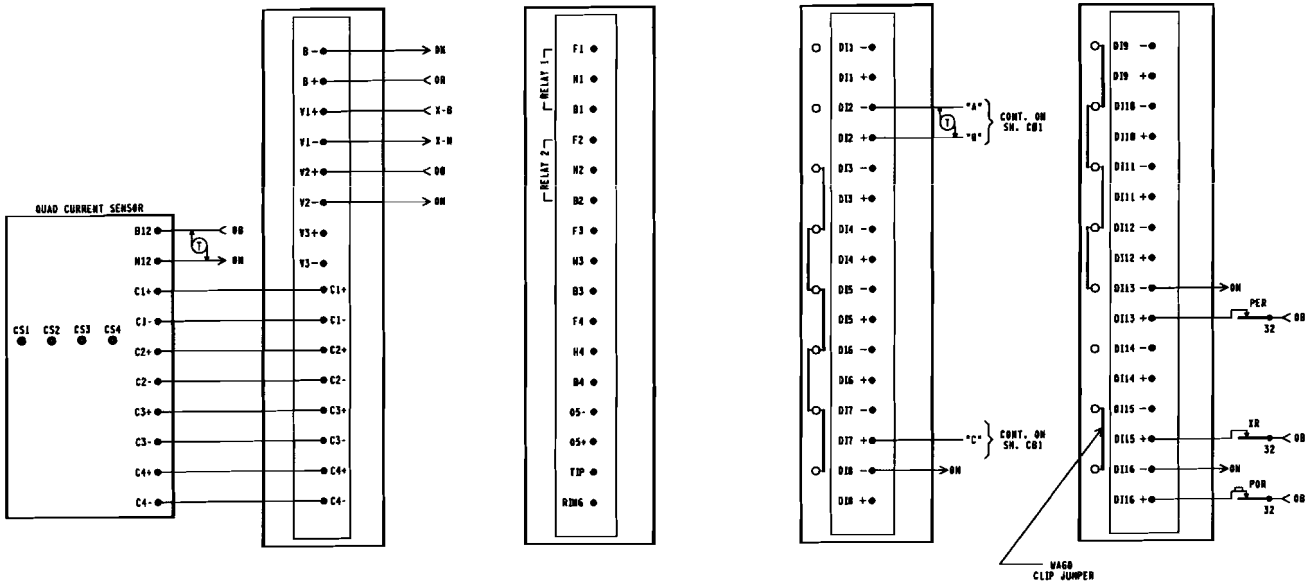

NOTE: DATA RECORDER CURRENT SENSOR PROGRAM
CS1 - 5 LAMPS
CS2 - 5 LAMPS
CS3 - 5 LAMPS
CS4 - 5 LAMPS

REVISIONS	
03-19-03 SWE	IL2001026

SAFETRAN systems

PROJECT #: IL2000010
DES/CHKD BY: NLS/SWS
DATE: 06-23-00
= IN
= OUT

CSX TRANSPORTATION
RAIL TRANSPORT GROUP ENGINEERING
COMMUNICATIONS AND SIGNALS

MONTEZUMA TO DECATUR
DECATUR, IL
RECORDER CIRCUITS
AIRPORT RD. (CR 33), 154 635E, NP. BD-273.00

DESIGNED	DIGITIZED	CHECKED	DATE
SWE/JLB	SWE/DRC	SWE/MJH	09-21-01

DRAWING	SHEET NO	NEXT SH	NEXT FILE	NEXT SH	FILE	SHEET
2175-6-Q	1-5		BD27362 BD27899	S01 I01	BD27300	C03