16 REV

ELGIN, JOLIET & EASTERN RAILWAY COMPANY
HIGHWAY CROSSING WARNING SYSTEM

OAKWOOD ROAD
LAKE ZURICH, ILLINOIS

RECEIVED
DEC 3 2008
Illinois Commerce Commission
RAIL SAFETY SECTION

DOT 260794B
EJ&E MP 54.73 WSD

This drawing was created using CADD. All field and office changes are to be routed through Main Office in East Joliet. DO NOT make changes to this original copy without notifying the Engineer-Signals, Communications & Electrical

NO	DESCRIPTION	BY	CHK'D	DATE
8				
7				
6				
5				
4				
3				
2				
1				
	AS IN SERVICE	TVH	TVH	11/07

REVISIONS

ELGIN, JOLIET & EASTERN RAILWAY COMPANY

HIGHWAY CROSSING WARNING SYSTEM
OAKWOOD ROAD
LAKE ZURICH, ILLINOIS

ENGINEERING SERVICES
JOLIET, IL 60432
SCALE NONE

CHECKED BY TVH
IN CHARGE OF TVH

DRAWN BY TVH
DATE 2/15/07
CAD ID 260794B-COV.DWG

FILE NO. 260794B
SHEET NO. COVER
CONT'D ON 0

DESCRIPTION	SHEET NO.	DWG. NO.
COVER	COVER	260794B-COV
INDEX	0	260794B-000
CROSSING DETAIL & APPROACH CALCULATIONS	1	260794B-001
HXP WIRING	2	260794B-002
NOT USED	3	260794B-003
HXP SETUP SHEET	4	260794B-004
GATE & LAMP CONTROL WIRING	5	260794B-005
CABLE & ARRESTOR PANEL WIRING	6	260794B-006
CROSSING GATE WIRING	7	260794B-007
BATTERY BUS & RECTIFIER WIRING	8	260794B-008
HCA & LOD WIRING	9	260794B-009
RTU WIRING	9A	260794B-009A
HOUSE LAYOUT	10	260794B-010
EQUIPMENT RACK LAYOUT	11	260794B-011
AC POWER DISTRIBUTION	12	260794B-012
WALL"C" LAYOUT DETAIL	13	260794B-013

THE J

This drawing was created using CADD. All field and office changes are to be routed through Main Office in East Joliet. DO NOT make changes to this original copy without notifying the Engineer-Signals, Communications & Electrical

NO	DESCRIPTION	BY	CHK'D	DATE
8				
7				
6				
5				
4				
3				
2				
1				
	AS IN SERVICE	TWH	TWH	11/07

REVISIONS

ELGIN, JOLIET & EASTERN RAILWAY COMPANY

SIGNAL PRINT INDEX
OAKWOOD ROAD
LAKE ZURICH, ILLINOIS

ENGINEERING SERVICES
JOLIET, IL 60432
SCALE NONE

CHECKED BY TWH
IN CHARGE OF TWH

DRAWN BY TWH
DATE 2/16/07
CAD ID 260794B-000.DWG

FILE NO. 260794B | SHEET NO. 0 | CONT'D ON 1

HOUSE CABLE ASSIGNMENTS	
DEVICE	CABLE(S)
GATE A	2–7C #6
GATE B	2–7C #6
CANT A	5C #6
T1–1, T2–1	2C #6 TW
R1–1, R2–1	2C #6 TW
AC POWER	3C #2

GUIDELINES FOR CROSSING WARNING TIME AND APPROACH DISTANCE CALCULATIONS	
MAX SPEED IN MPH	45
CT IN SECONDS	0
BUFFER TIME IN SECONDS	5
TOTAL WARNING TIME IN SECONDS	25
ERT IN SECONDS	8
APT IN SECONDS	0
TOTAL APPROACH TIME IN SECONDS	33
APPROACH DISTANCE IN FEET	2183
SPEED IN FPS	66
CLEARANCE TIME CALCULATION	
LONGEST DISTANCE IN FEET (35 FEET MINIMUM)	--
CT IN SECONDS	--

APT – ADVANCED PRE–EMPTION
ERT – EQUIPMENT RESPONSE TIME
CT – CLEARANCE TIME

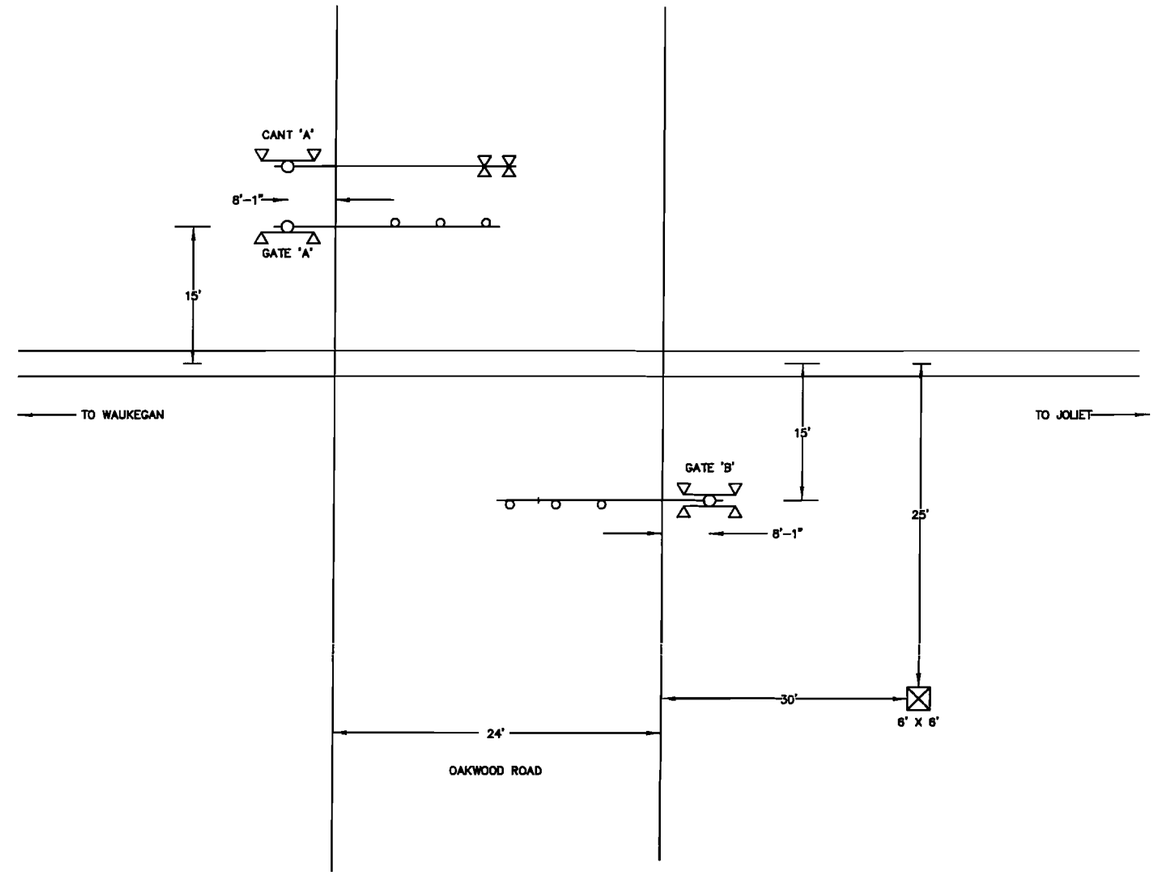

DOT: 260794B	EJ&E MP 54.73 WSD	
EQUIPMENT	QUADRANT	
	NW	SE
FLS	–	–
GATE (MODEL)	US&S 95	US&S 95
GATE (FT')	16	20 ART.
CANTILEVER (FT')	16	–
ADDITIONAL LIGHTS	–	–
BELL	X	X
X BUCKS	X	X
MULTIPLE TRACK SIGNS	–	–

THE J

This drawing was created using CADD. All field and office changes are to be routed through Main Office in East Joliet. DO NOT make changes to this original copy without notifying the Engineer–Signals, Communications & Electrical

NO	DESCRIPTION	BY	CHK'D	DATE
8				
7				
6				
5				
4				
3				
2				
1				
	AS IN SERVICE	TWH	TWH	11/07

REVISIONS

ELGIN, JOLIET & EASTERN RAILWAY COMPANY

CROSSING DETAIL & CALCULATIONS
OAKWOOD ROAD
LAKE ZURICH, ILLINOIS

ENGINEERING SERVICES
JOLIET, IL 60432
SCALE NONE

CHECKED BY TWH
IN CHARGE OF TWH

DRAWN BY TWH
DATE 2/16/07
CAD ID 260794B-001.DWG

FILE NO. 260794B | SHEET NO. 1 | CONT'D ON 2

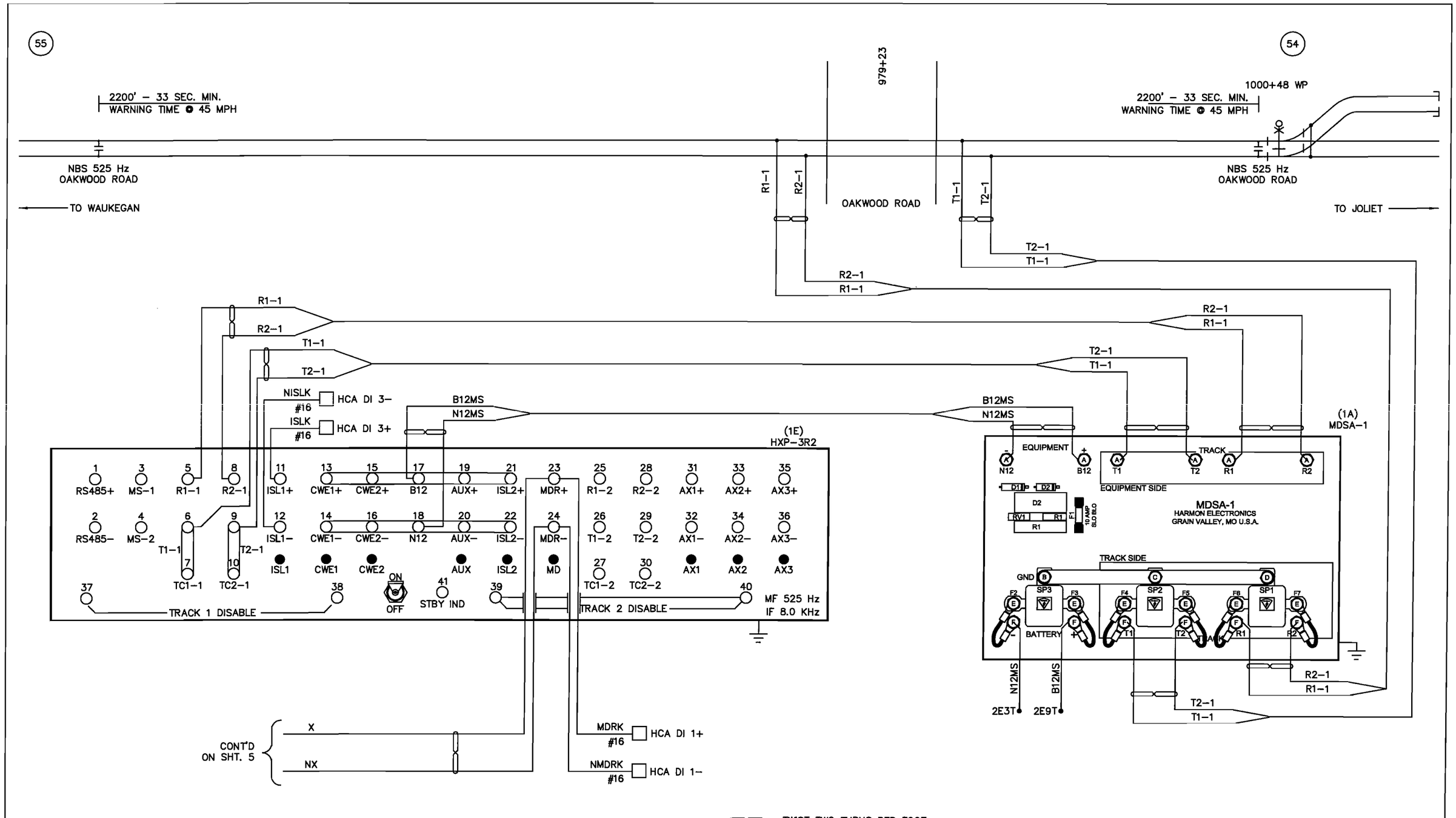

= TWIST TWO TURNS PER FOOT.

NOTES: 1. ALL WIRING THIS PAGE TO BE #10 AWG UNLESS OTHERWISE NOTED.

This drawing was created using CADD. All field and office changes are to be routed through Main Office in East Joliet. DO NOT make changes to this original copy without notifying the Engineer–Signals, Communications & Electrical.

NO	DESCRIPTION	BY	CHK'D	DATE
8				
7				
6				
5				
4				
3				
2				
1				
	AS IN SERVICE	TWH	TWH	11/07

REVISIONS

ELGIN, JOLIET & EASTERN RAILWAY COMPANY

HXP WIRING
OAKWOOD ROAD
LAKE ZURICH, ILLINOIS

ENGINEERING SERVICES
JOLIET, IL 60432
SCALE NONE

CHECKED BY TWH
IN CHARGE OF TWH

DRAWN BY TWH
DATE 2/16/07
CAD ID 260794B-002.DWG

FILE NO. 260794B | SHEET NO. 2 | CONT'D ON 3

Grade Crossing Location Record

Cabinet Number (Option 90) 7271

Location OAKWOOD ROAD Milepost 54.73 DOT 260 794B Date 11 / 06 / 07

Operating Program HPN _____ Version 41.0

System Monitor Program HPN _____ Version 20.2

Hardware Settings

Track 1 Master ☒ Slave ☐ 4 kHz ☐ 8 kHz ☒
LOS jumper 0 ☐ 1 ☒ 2 ☐ Fault jumper 0 ☒ 1 ☐
Approach configuration switch position: Normal ☒ Short ☐ Very Short ☐

Track 2 Master ☐ Slave ☐ 4 kHz ☐ 8 kHz ☐
LOS jumper 0 ☐ 1 ☐ 2 ☐ Fault jumper 0 ☐ 1 ☐
Approach configuration switch position: Normal ☐ Short ☐ Very Short ☐

Adjust Select Adjustments

No.	Adjustment	Default	Range	Track 1	Track 2
1	Approach Length	9,999	0 - 9,999	2200 feet	feet
2	Warning Time	99	23 - 99	25 seconds	seconds
3	LIA	0	-9 to +9	1 steps	steps
4	TC (1 step = 32)	395	430 - 470	449 steps	steps
5	MD Restart	99%	0 - 99%	0 RX	RX

Option Adjustments

No.	Adjustment	Default	Range	Track 1	Track 2
0	RX	0	1-100		
1	TK-ENA	UP	UP or dn	UP ☒ dn ☐	UP ☐ dn ☒
2	TK FO	0	0 - 9999	525 Hz	Hz
3	CW/MD	d	C to d	C ☒ d ☐	C ☐ d ☐
4	UNI-BI	b	U - b	U ☐ b ☒	U ☐ b ☐
5	NBS-C	0	0 - 99	93	RX
		9,999	RX dependant	2365	feet
6	CWEWT	80	0 - 99	80	seconds
7	LOS	16	4 - 99	16	seconds
8	IJ-LOS	5	3 - 99	5	seconds
9	BC	frequency dependant	50 -250	147	
10	P-COMP	0	0 - 10	0	degrees

HXP-3, HXP-3R, HXP-3R2

AX Adjustment Options NOTE: NO AX DRIVE IS USED AT THIS LOCATION

	Default	Range	Option 11 - AX1	Option 12 - AX2	Option 13 - AX3
TK-ASN		1, 2, Both	1 ☐ 2 ☐ Both ☐	1 ☐ 2 ☐ Both ☐	1 ☐ 2 ☐ Both ☐
OF-TK1	0	0 - 9,999	feet	feet	feet
OF-TK2	0	0 - 9,999	feet	feet	feet
WT	99	23 - 99	seconds	seconds	seconds
MD-RST	99	0 - 99%	RX	RX	RX
CW/MD	d	C or d	C ☐ d ☐	C ☐ d ☐	C ☐ d ☐
CJ-LOS	0	3 - 99	seconds	seconds	seconds
PJ-DET	15	4 - 15	seconds	seconds	seconds
POS-ST	dn	UP or dn	UP ☐ dn ☐	UP ☐ dn ☐	UP ☐ dn ☐

No.	Adjustment	Default	Range	Track 1	Track 2
17	MDR-AX	n*	n or A	n ☒ A ☐	n ☐ A ☐
	OF-TK1	0	0 - 9,999	feet	
	OF-TK2	0	0 - 9,999		feet
	CJ-LOS	0	3 - 99	seconds	seconds
	PJ-DET	15	4 - 15	seconds	seconds
18	MD-TMR	10	10-99 (0=disable)	10 minutes	minutes
19	MIN-WT	0	23-99 (0=disable)	0 seconds	seconds
20	FS-DET	0	10-30 (0=disable)	0 minutes	minutes
21	POS-RX	0	0 - 74 (0=disable)	0 RX	RX
	POS-TM	0	0 - 99**	0 minutes	minutes
22	AR-TMR	0	0-80 (0=disable)	0 minutes	minutes
47	ATO-RX	dn	UP or dn	UP ☐ dn ☒	UP ☐ dn ☐
48	PF-ENA	UP	UP or dn	UP ☒ dn ☐	UP ☐ dn ☐

***n = not an AX drive (no options available)**
****0 = disable, 99 = continuous**

Shunt Record

West Approach		No Shunt RX	No Shunt Phase	100% Shunt RX	100% Shunt Phase		50% Shunt RX	50% Shunt Phase	LIA Added ±1 to 9
Track 1	Normal								
	Standby								
Track 2	Normal								
	Standby								
East Approach									
Track 1	Normal	98	72	97			47		+1
	Standby								
Track 2	Normal								
	Standby								

This drawing was created using CADD. All field and office changes are to be routed through main Office in East Joliet. DO NOT make changes to this original copy without notifying the Engineer-Signals, Communications & Electrical

NO	DESCRIPTION	BY	CHK'D	DATE
8				
7				
6				
5				
4				
3				
2				
1				
	AS IN SERVICE	TWH	TWH	11/07

REVISIONS

ELGIN, JOLIET & EASTERN RAILWAY COMPANY

HXP SETUP SHEET
OAKWOOD ROAD
LAKE ZURICH, ILLINOIS

ENGINEERING SERVICES
JOLIET, IL 60432
SCALE NONE

CHECKED BY TWH
IN CHARGE OF TWH

DRAWN BY TWH
DATE 2/16/07
CAD ID 260794B-004.DWG

FILE NO. 260794B SHEET NO. 4 CONT'D ON 5

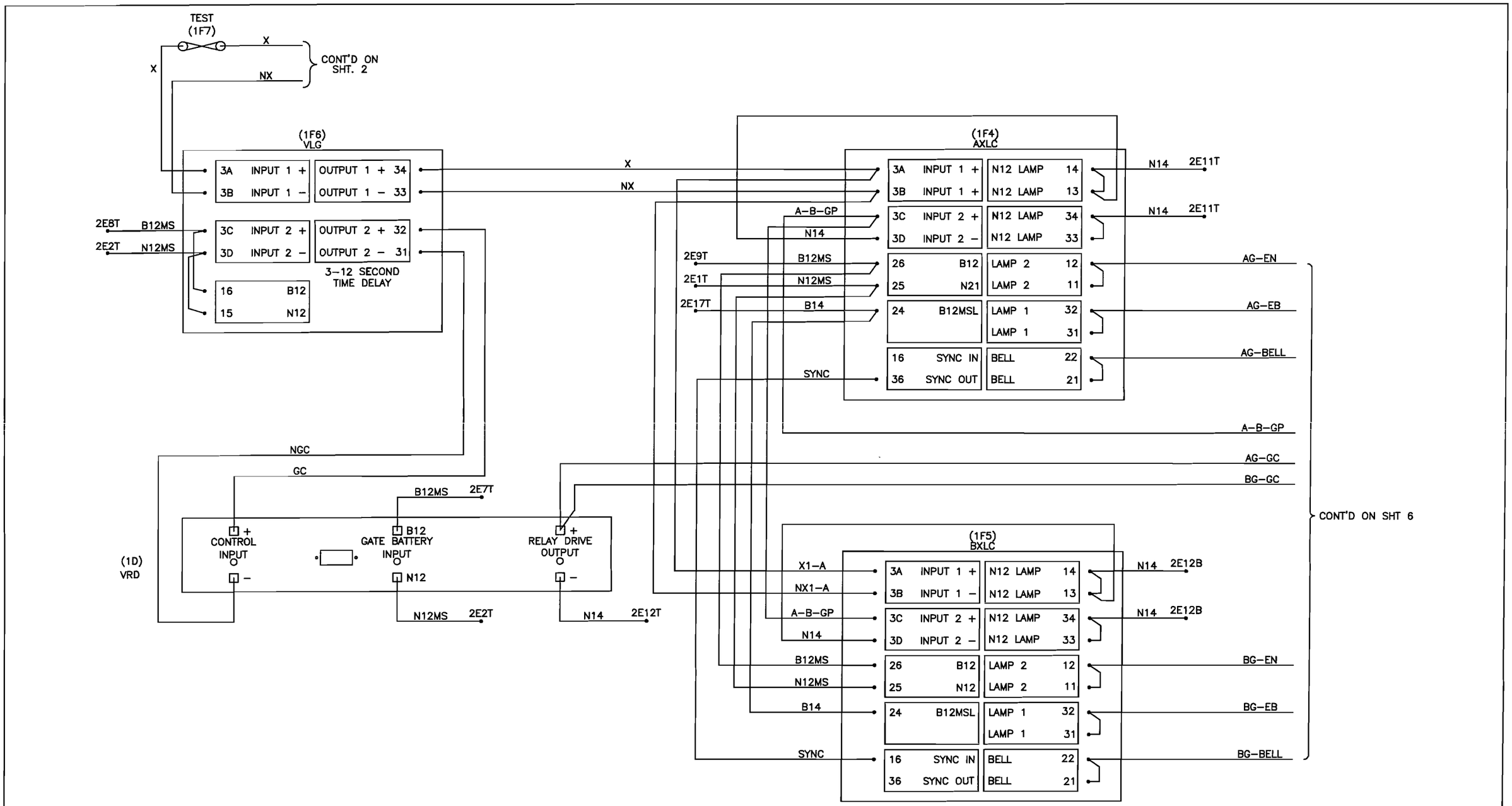

NOTES:
1. ALL WIRING THIS SHEET TO BE #10 UNLESS OTHERWISE SHOWN.
2. BEFORE PLACING IN SERVICE, VERIFY VLG IS SET FOR 3 SECOND DELAY

This drawing was created using CADD. All field and office changes are to be routed through Main Office in East Joliet. DO NOT make changes to this original copy without notifying the Engineer-Signals, Communications & Electrical

NO	DESCRIPTION	BY	CHK'D	DATE
8				
7				
6				
5				
4				
3				
2				
1				
	AS IN SERVICE	TWH	TWH	11/07

REVISIONS

ELGIN, JOLIET & EASTERN RAILWAY COMPANY

LOGIC GATE & LAMP CONTROL WIRING
OAKWOOD ROAD
LAKE ZURICH, ILLINOIS

ENGINEERING SERVICES
JOLIET, IL 60432
SCALE NONE

CHECKED BY TWH
IN CHARGE OF TWH

DRAWN BY TWH
DATE 2/16/07
CAD ID 260794B-005.DWG

FILE NO. 260794B | SHEET NO. 5 | CONT'D ON 6

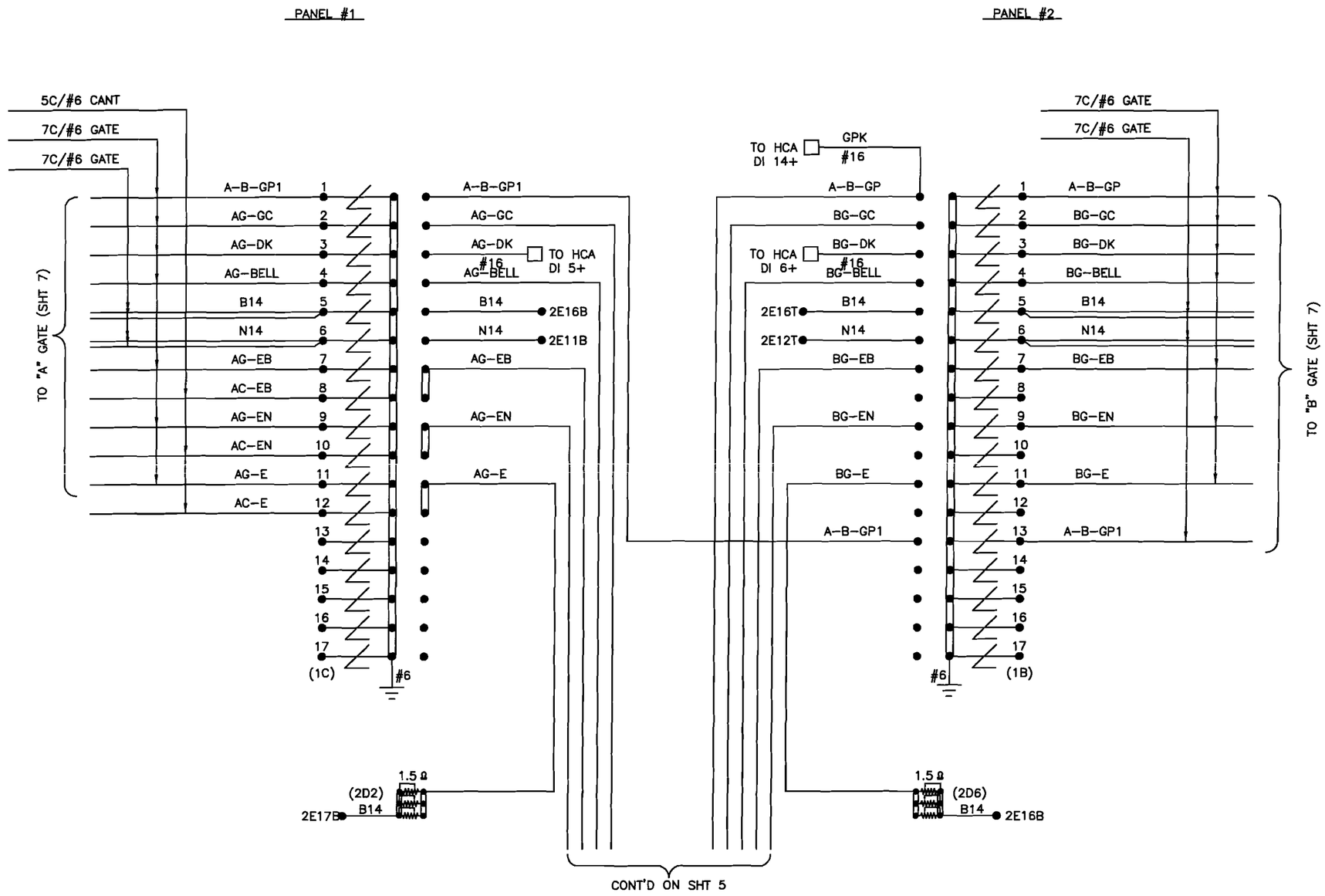

NOTES:

1. ALL WIRING THIS SHEET TO BE #10 UNLESS OTHERWISE SHOWN.
2. ADJUST ALL RESISTORS EVENLY.

This drawing was created using CADD. All field and office changes are to be routed through Main Office in East Joliet. DO NOT make changes to this original copy without notifying the Engineer-Signals, Communications & Electrical.

NO	DESCRIPTION	BY	CHK'D	DATE
8				
7				
6				
5				
4				
3				
2				
1				
	AS IN SERVICE	TWH	TWH	11/07

REVISIONS

ELGIN, JOLIET & EASTERN RAILWAY COMPANY

CABLE & ARRESTOR PANEL WIRING
OAKWOOD ROAD
LAKE ZURICH, ILLINOIS

ENGINEERING SERVICES
JOLIET, IL 60432
SCALE NONE

CHECKED BY TWH
IN CHARGE OF TWH

DRAWN BY TWH
DATE 9/16/07
CAD ID 260794B-006.DWG

FILE NO. 260794B | SHEET NO. 6 | CONT'D ON 7

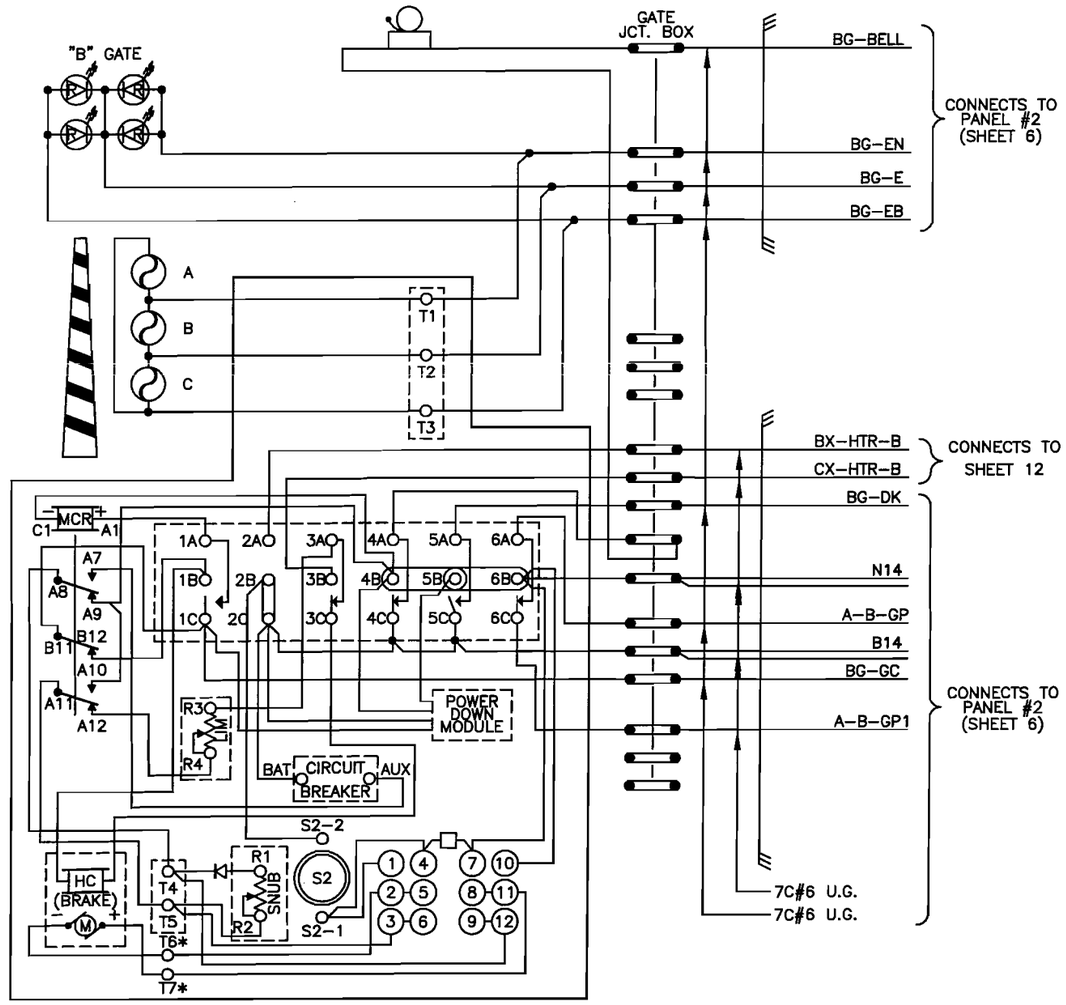

US & S MODEL 95 GATE MECHANISM

(SHOWN WITH MECHANISM IN VERTICAL POS.)

CONTACT	CLOSED	FUNCTION
1	0°–89°	MOTOR UP
2		VACANT SLOT
3	45°–90°	MOTOR DN
4	5°–90°	BELL
5	0° – 5°	GATE DN IND
6	83°–90°	FLASH'G LIGHT

NOTES:

1. JUMPERS MUST BE ADDED TO EACH GATE AS SHOWN.
2. GROUND WIRE OF CABLE SHALL BE GROUNDED AT EACH GATE.
3. ALL LIGHT WIRES THIS PAGE ARE TO BE #10 AWG.
4. GATE 'A' B14 & N14 DOUBLED UP TO PREVENT VOLTAGE DROP

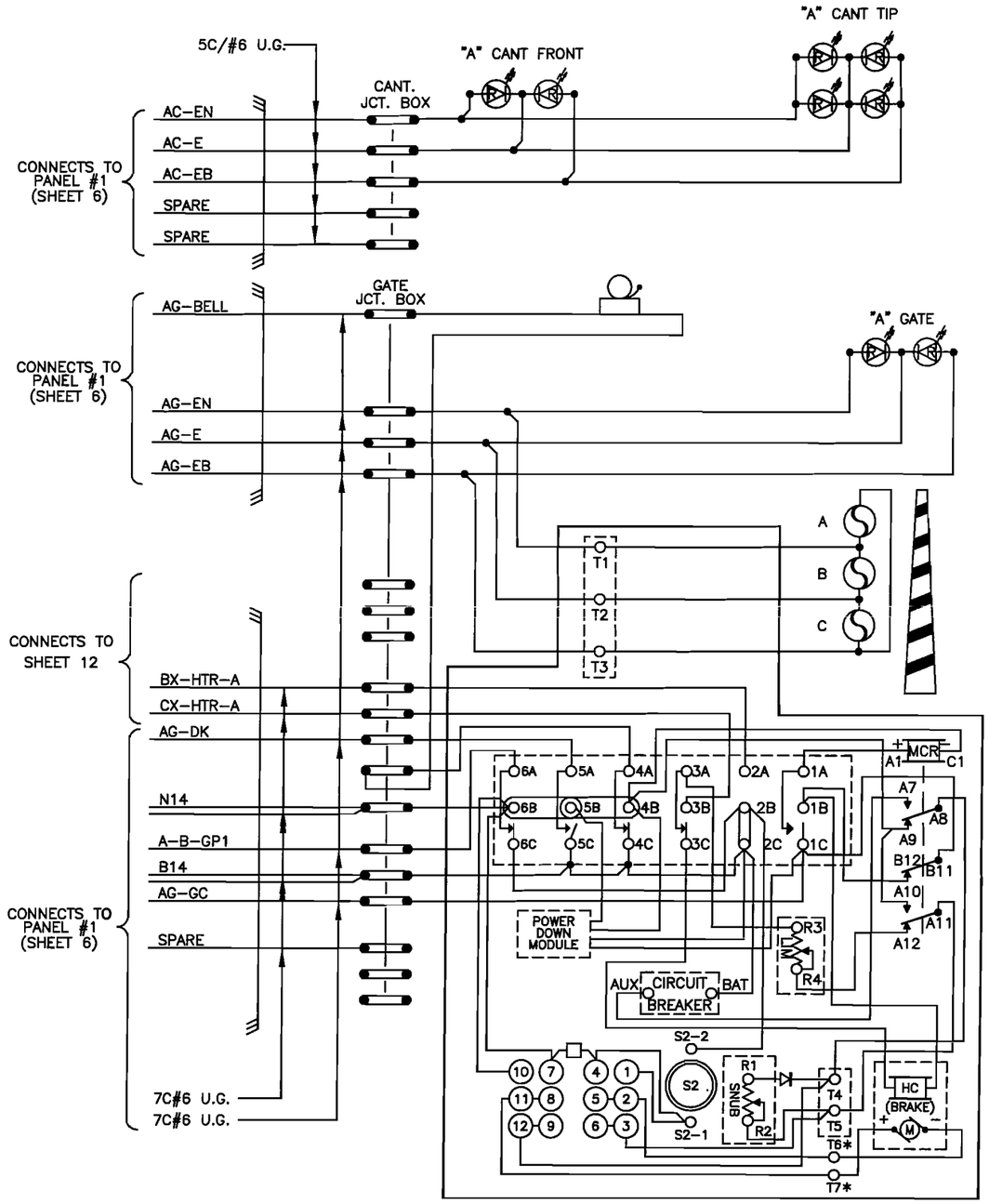

US & S MODEL 95 GATE MECHANISM

This drawing was created using CADD. All field and office changes are to be routed through Main Office in East Joliet. DO NOT make changes to this original copy without notifying the Engineer-Signals, Communications & Electrical

NO	DESCRIPTION	BY	CHK'D	DATE
8				
7				
6				
5				
4				
3				
2				
1				
	AS IN SERVICE	TWH	TWH	11/07

REVISIONS

ELGIN, JOLIET & EASTERN RAILWAY COMPANY

CROSSING GATE WIRING
OAKWOOD ROAD
LAKE ZURICH, ILLINOIS

ENGINEERING SERVICES
JOLIET, IL 60432
SCALE NONE

CHECKED BY TWH
IN CHARGE OF TWH

DRAWN BY TWH
DATE 8/16/07
CAD ID 2607249-007.DWG

FILE NO. 260794B | SHEET NO. 7 | CONT'D ON 8

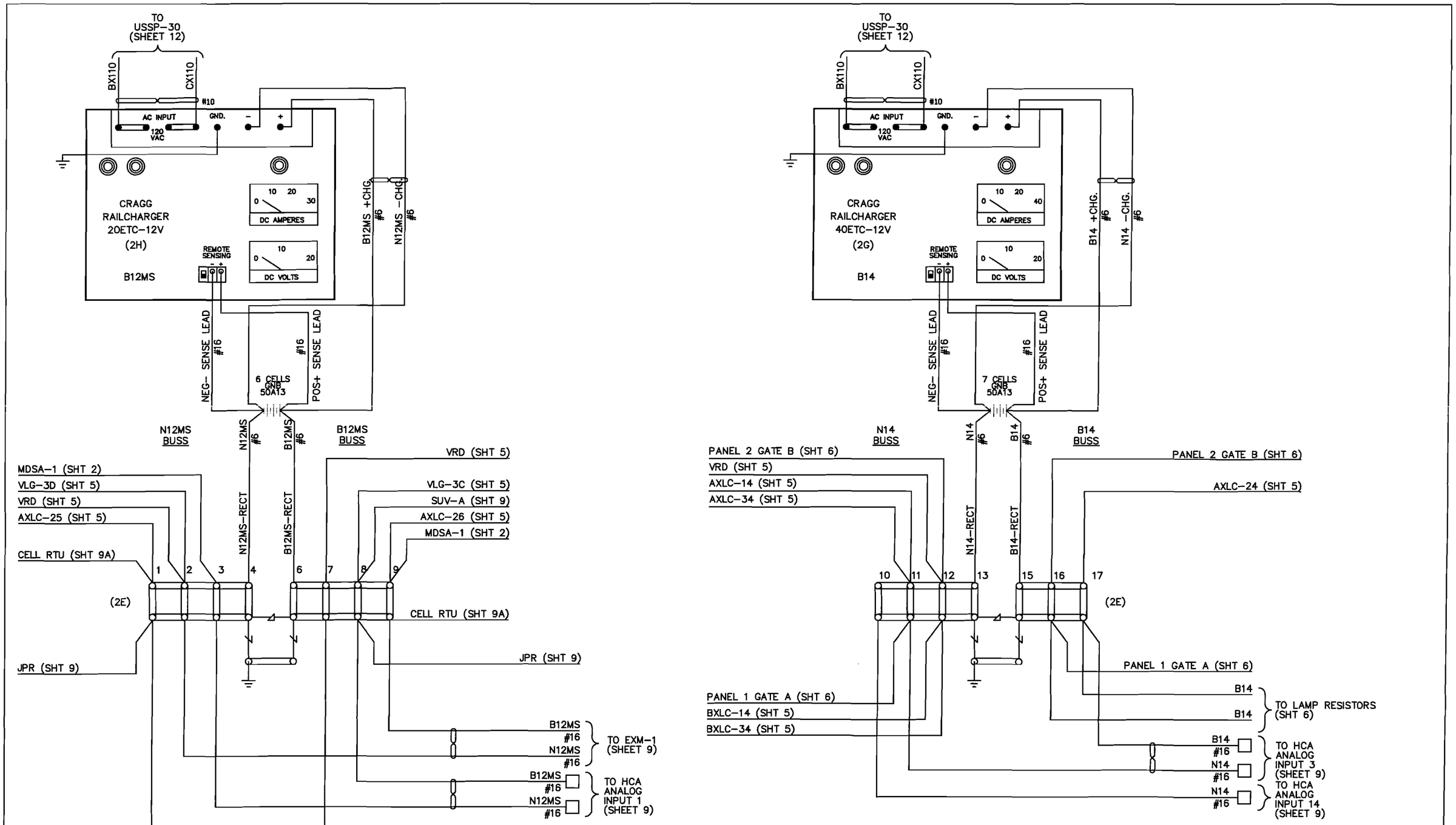

This drawing was created using CADD. All field and office changes are to be routed through Main Office in East Joliet. DO NOT make changes to this original copy without notifying the Engineer-Signals, Communications & Electrical

NO	DESCRIPTION	BY	CHK'D	DATE
1	AS IN SERVICE	TWH	TWH	11/07

REVISIONS

ELGIN, JOLIET & EASTERN RAILWAY COMPANY

BATTERY BUS & RECTIFIER WIRING
OAKWOOD ROAD
LAKE ZURICH, ILLINOIS

ENGINEERING SERVICES
JOLIET, IL 60432
SCALE NONE

CHECKED BY TWH
IN CHARGE OF TWH

DRAWN BY TWH
DATE 2/16/07
CAD ID 260794B-008.DWG

FILE NO. 260794B | SHEET NO. 8 | CONT'D ON 9

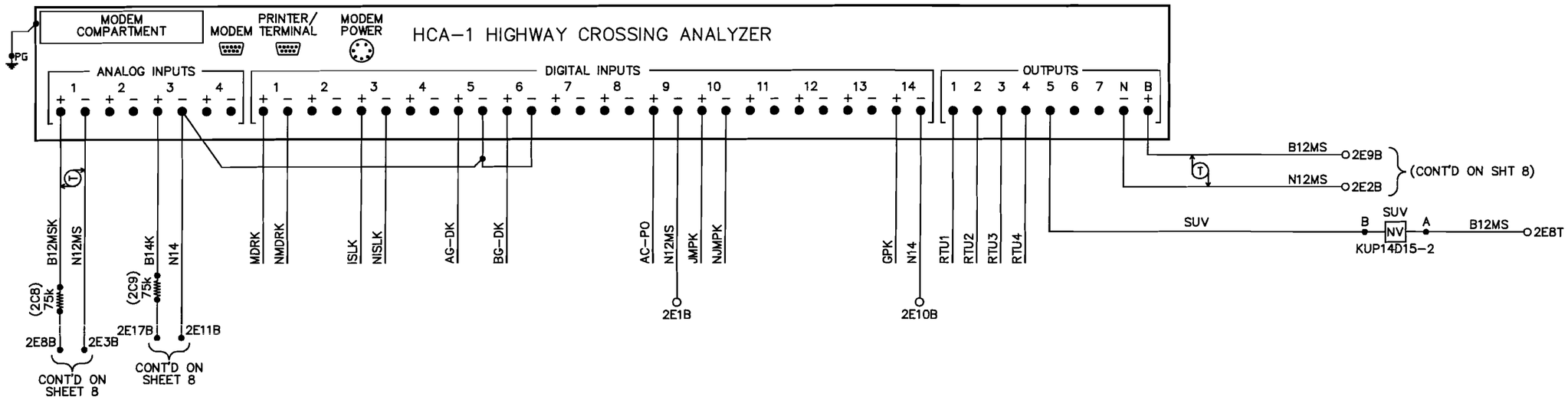

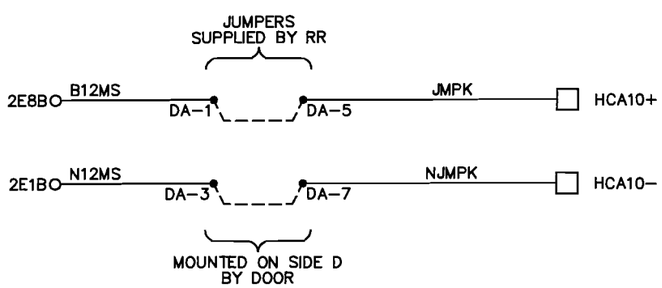

NOTES:

1. ALL WIRING ON THIS SHEET TO BE #16 UNLESS OTHERWISE NOTED.

This drawing was created using CADD. All field and office changes are to be routed through Main Office in East Joliet. DO NOT make changes to this original copy without notifying the Engineer-Signals, Communications & Electrical

NO	DESCRIPTION	BY	CHK'D	DATE
8				
7				
6				
5				
4				
3				
2				
1				
	AS IN SERVICE	TWH	TWH	11/07

REVISIONS

ELGIN, JOLIET & EASTERN RAILWAY COMPANY

HCA WIRING
OAKWOOD ROAD
LAKE ZURICH, ILLINOIS

ENGINEERING SERVICES
JOLIET, IL 60432
SCALE NONE

CHECKED BY TWH
IN CHARGE OF TWH

DRAWN BY TWH
DATE 8/16/07
CAD ID 260794B-009.DWG

FILE NO. 260794B | SHEET NO. 9 | CONT'D ON 10

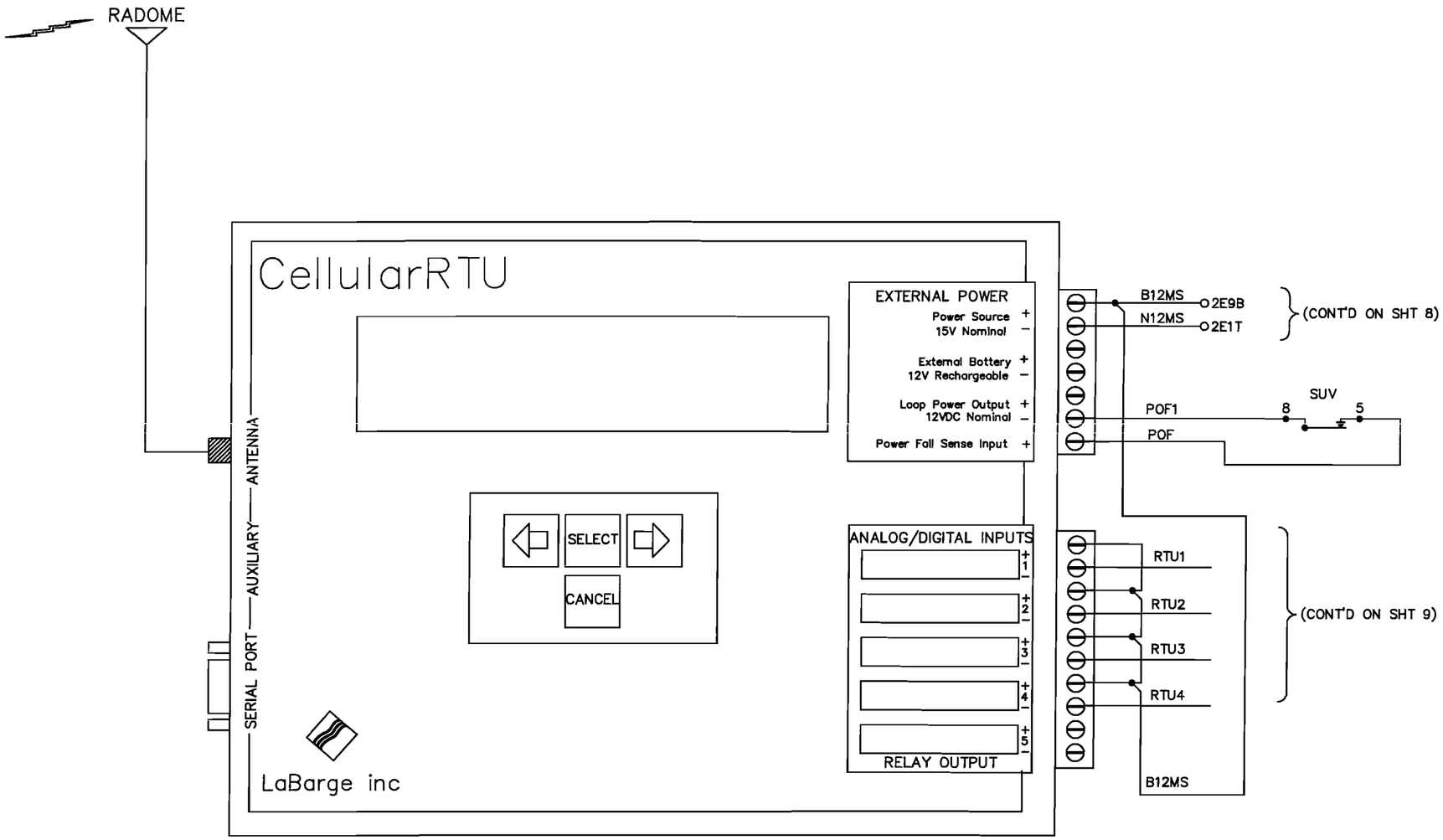

SUV
CONTACT CONFIGURATION
POTTER & BRUMFIELD RELAY

HEEL	9	8	7
FRONT	6	5	4
BACK	3	2	1

This drawing was created using CADD. All field and office changes are to be routed through Main Office in East Joliet. DO NOT make changes to this original copy without notifying the Engineer-Signals, Communications & Electrical.

NO	DESCRIPTION	BY	CHK'D	DATE
8				
7				
6				
5				
4				
3				
2				
1				
	AS IN SERVICE	TWH	TWH	11/07

REVISIONS

ELGIN, JOLIET & EASTERN RAILWAY COMPANY

RTU WIRING
OAKWOOD ROAD
LAKE ZURICH, ILLINOIS

ENGINEERING SERVICES
JOLIET, IL 60432
SCALE NONE

CHECKED BY TWH
IN CHARGE OF TWH

DRAWN BY TWH
DATE 2/16/07
CAD ID. [illegible]

FILE NO. 260794B
SHEET NO. 9A
CONT'D ON 10

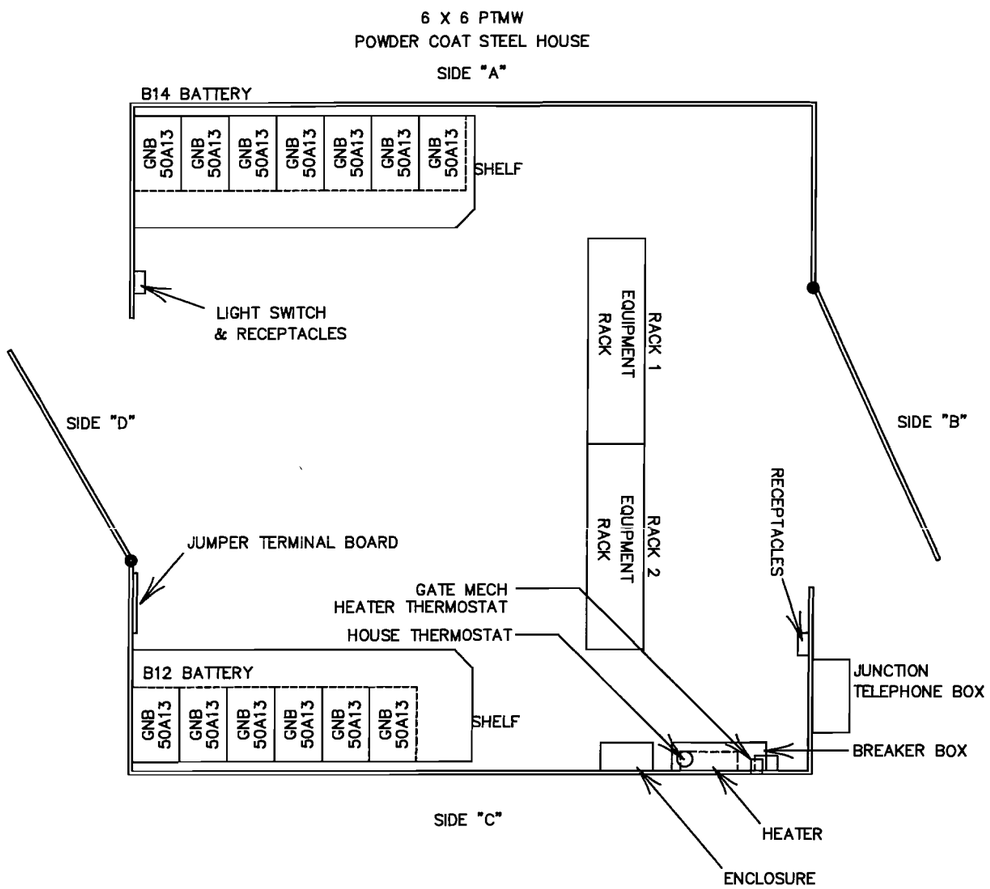

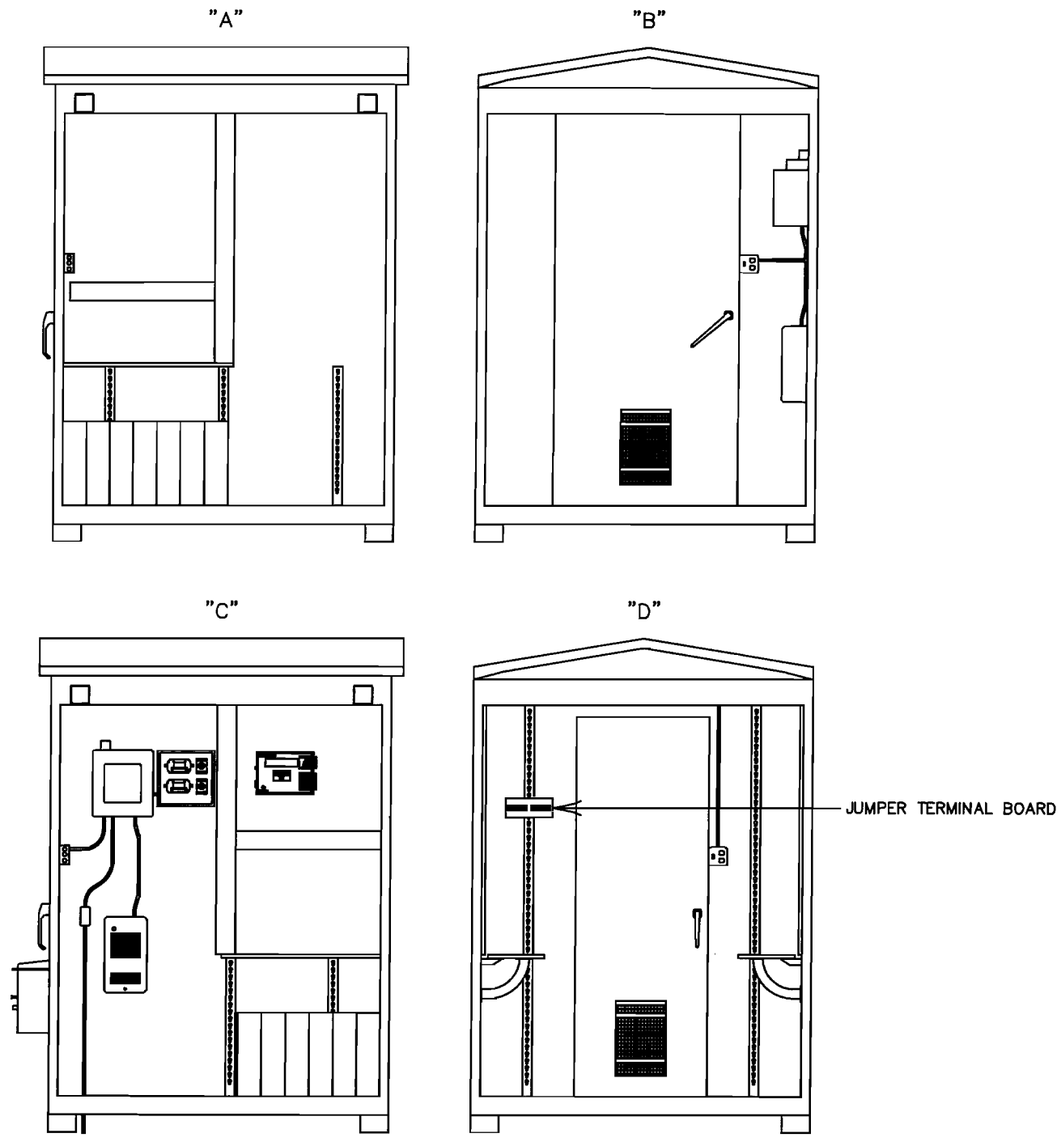

This drawing was created using CADD. All field and office changes are to be routed through Main Office in East Joliet. DO NOT make changes to this original copy without notifying the Engineer-Signals, Communications & Electrical

NO	DESCRIPTION	BY	CHK'D	DATE
8				
7				
6				
5				
4				
3				
2				
1				
	AS IN SERVICE	TWH	TWH	11/07

REVISIONS

ELGIN, JOLIET & EASTERN RAILWAY COMPANY

HOUSE LAYOUT
OAKWOOD ROAD
LAKE ZURICH, ILLINOIS

ENGINEERING SERVICES
JOLIET, IL 60432
SCALE NONE

CHECKED BY TWH
IN CHARGE OF TWH

DRAWN BY TWH
DATE 8/16/07
CAD ID 2607948-010.DWG

FILE NO. 260794B

SHEET NO. 10

CONT'D ON 11

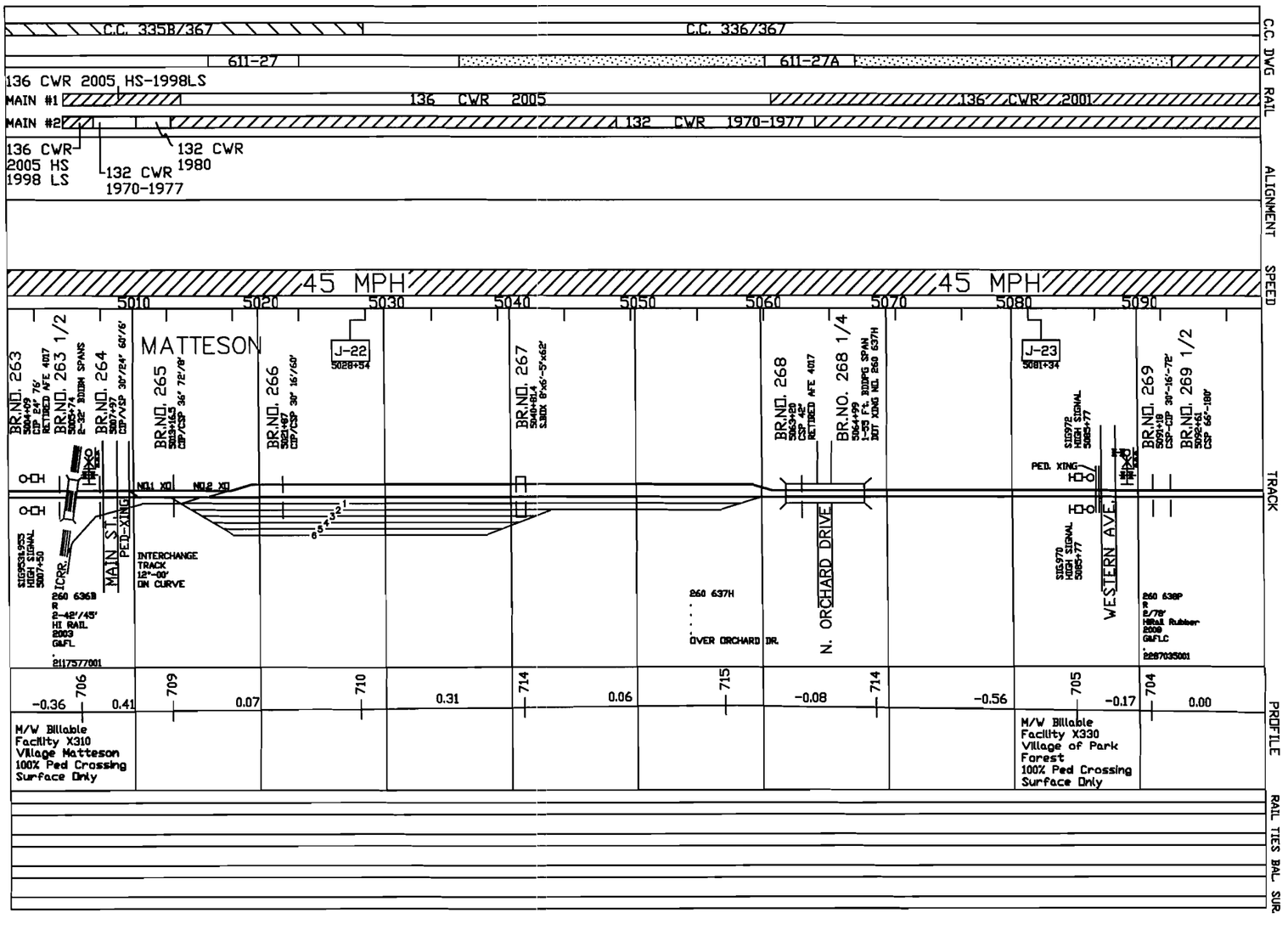
C.C. 335B/367
C.C. 336/367
611-27
611-27A
136 CWR 2005 HS-1998LS
MAIN #1
136 CWR 2005
136 CWR 2001
MAIN #2
132 CWR 1970-1977
136 CWR 2005 HS 1998 LS
132 CWR 1970-1977
132 CWR 1980
45 MPH
45 MPH
5010
5020
5030
5040
5050
5060
5070
5080
5090
BR.NO. 263
BR.NO. 263 1/2
BR.NO. 264
MATTESON
BR.NO. 265
BR.NO. 266
J-22
5028+54
BR.NO. 267
BR.NO. 268
BR.NO. 268 1/4
J-23
5081+34
BR.NO. 269
BR.NO. 269 1/2
MAIN ST.
PED-XING
INTERCHANGE TRACK 12°-00' DN CURVE
N. ORCHARD DRIVE
OVER ORCHARD DR.
PED. XING
WESTERN AVE.
706
709
710
714
715
714
705
704
-0.36
0.41
0.07
0.31
0.06
-0.08
-0.56
-0.17
0.00
M/W Billable Facility X310 Village Matteson 100% Ped Crossing Surface Only
M/W Billable Facility X330 Village of Park Forest 100% Ped Crossing Surface Only
C.C. DWG
RAIL
ALIGNMENT
SPEED
TRACK
PROFILE
RAIL TIES BAL. SUR.

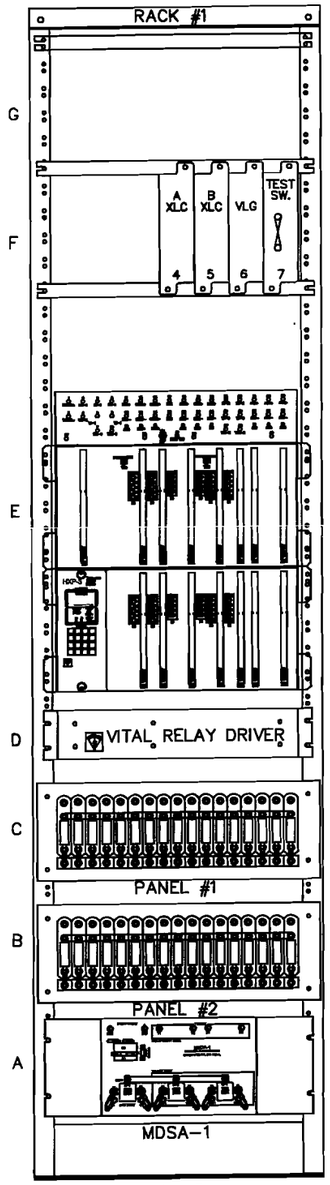

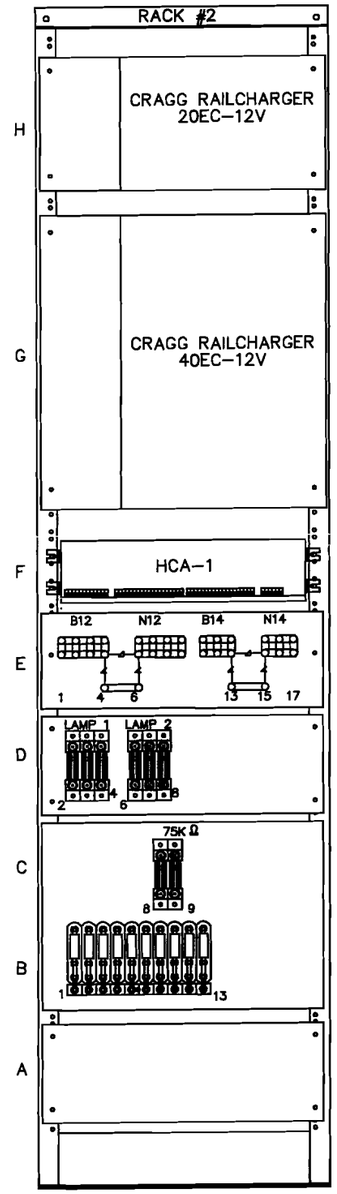

TLM MODULE SETTINGS

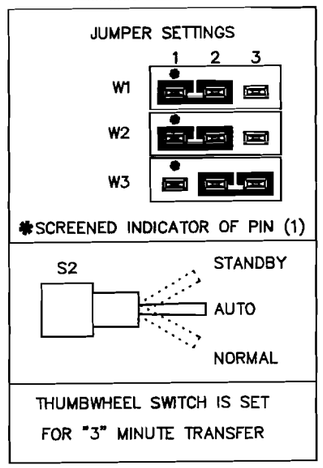

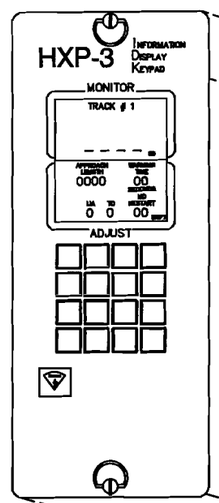

HXP-3R2
FOR WIRING PLAN – SEE SHT 2

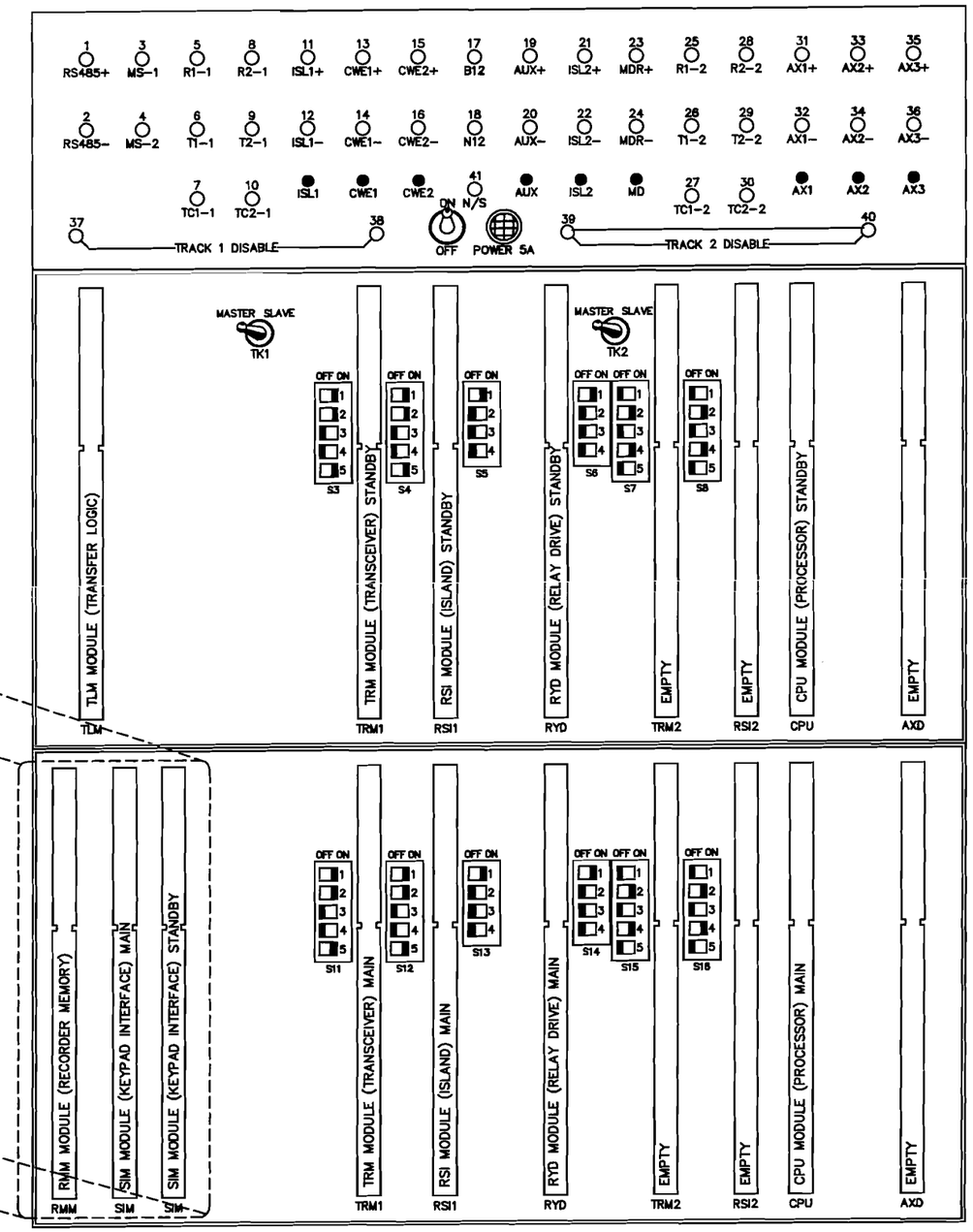

This drawing was created using CADD. All field and office changes are to be routed through Main Office in East Joliet. DO NOT make changes to this original copy without notifying the Engineer-Signals, Communications & Electrical.

NO	DESCRIPTION	BY	CHK'D	DATE
8				
7				
6				
5				
4				
3				
2				
1				
	AS IN SERVICE	TVH	TVH	11/07

REVISIONS

ELGIN, JOLIET & EASTERN RAILWAY COMPANY

EQUIPMENT RACK LAYOUT
OAKWOOD ROAD
LAKE ZURICH, ILLINOIS

ENGINEERING SERVICES
JOLIET, IL 60432
SCALE NONE

CHECKED BY TVH
IN CHARGE OF TVH

DRAWN BY TVH
DATE 2/16/07
CAD ID 260794B-011.DWG

FILE NO. 260794B
SHEET NO. 11
CONT'D ON 12

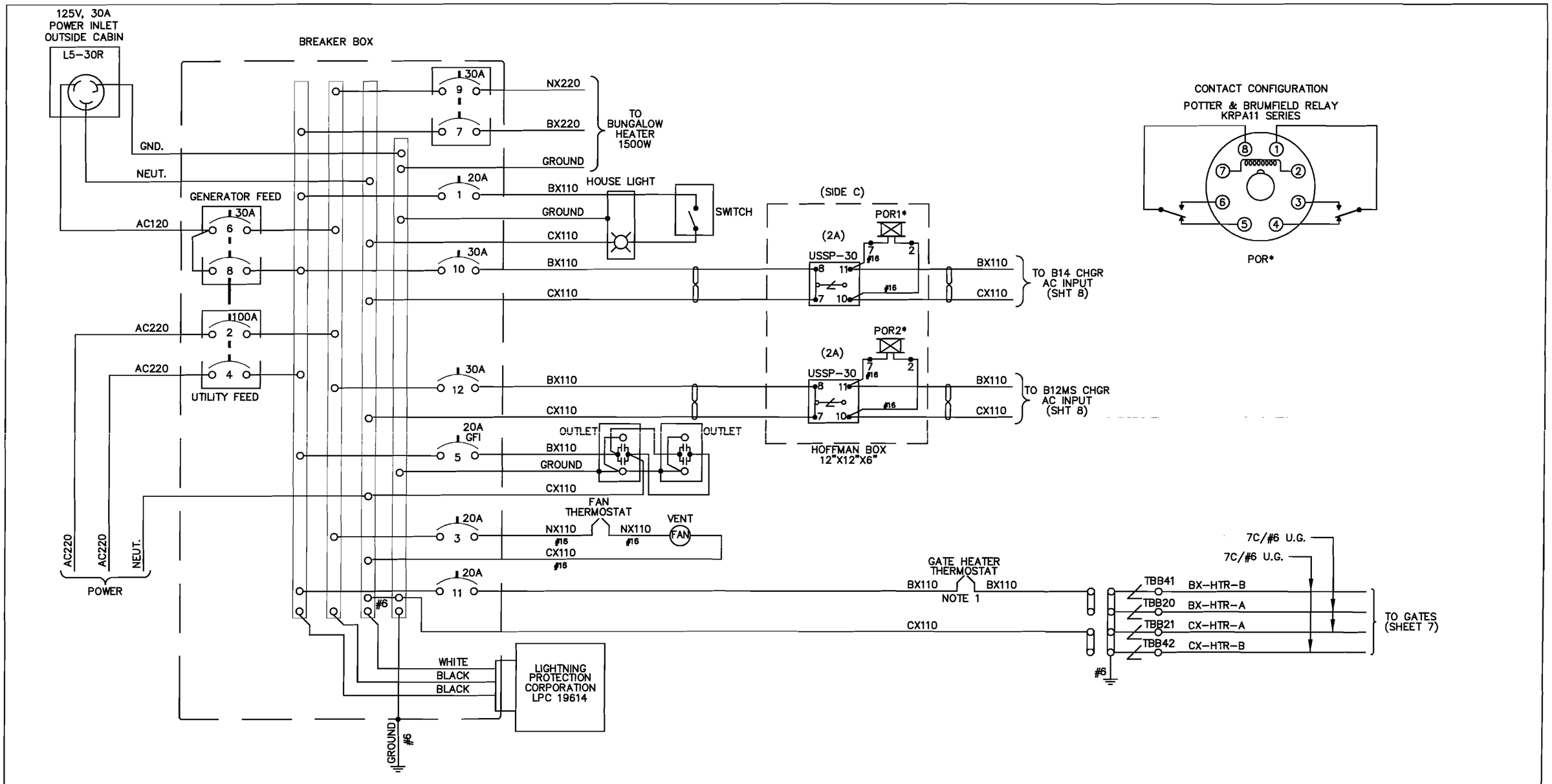

LEGEND:

= TWIST TWO TURNS PER FOOT.

NOTES:

1.) REMOTE TEMPERATURE SENSING BULB TO BE MOUNTED OUTSIDE OF HOUSE.

2.) * = 120VAC NON-VITAL AC RELAY KUP-14A15-120, 5A.

3.) ALL WIRING THIS SHEET TO BE #10 AWG. UNLESS OTHERWISE NOTED.

This drawing was created using CADD. All field and office changes are to be routed through Main Office in East Joliet. DO NOT make changes to this original copy without notifying the Engineer-Signals, Communications & Electrical

NO	DESCRIPTION	BY	CHK'D	DATE
8				
7				
6				
5				
4				
3				
2				
1				
	AS IN SERVICE	TWH	TWH	11/07

REVISIONS

ELGIN, JOLIET & EASTERN RAILWAY COMPANY

AC POWER DISTRIBUTION
OAKWOOD ROAD
LAKE ZURICH, ILLINOIS

ENGINEERING SERVICES
JOLIET, IL 60432
SCALE NONE

CHECKED BY TWH
IN CHARGE OF TWH

DRAWN BY TWH
DATE 2/16/07
CAD ID 260794B-012.DWG

FILE NO. 260794B

SHEET NO. 12

CONT'D ON 13

WALL "C"

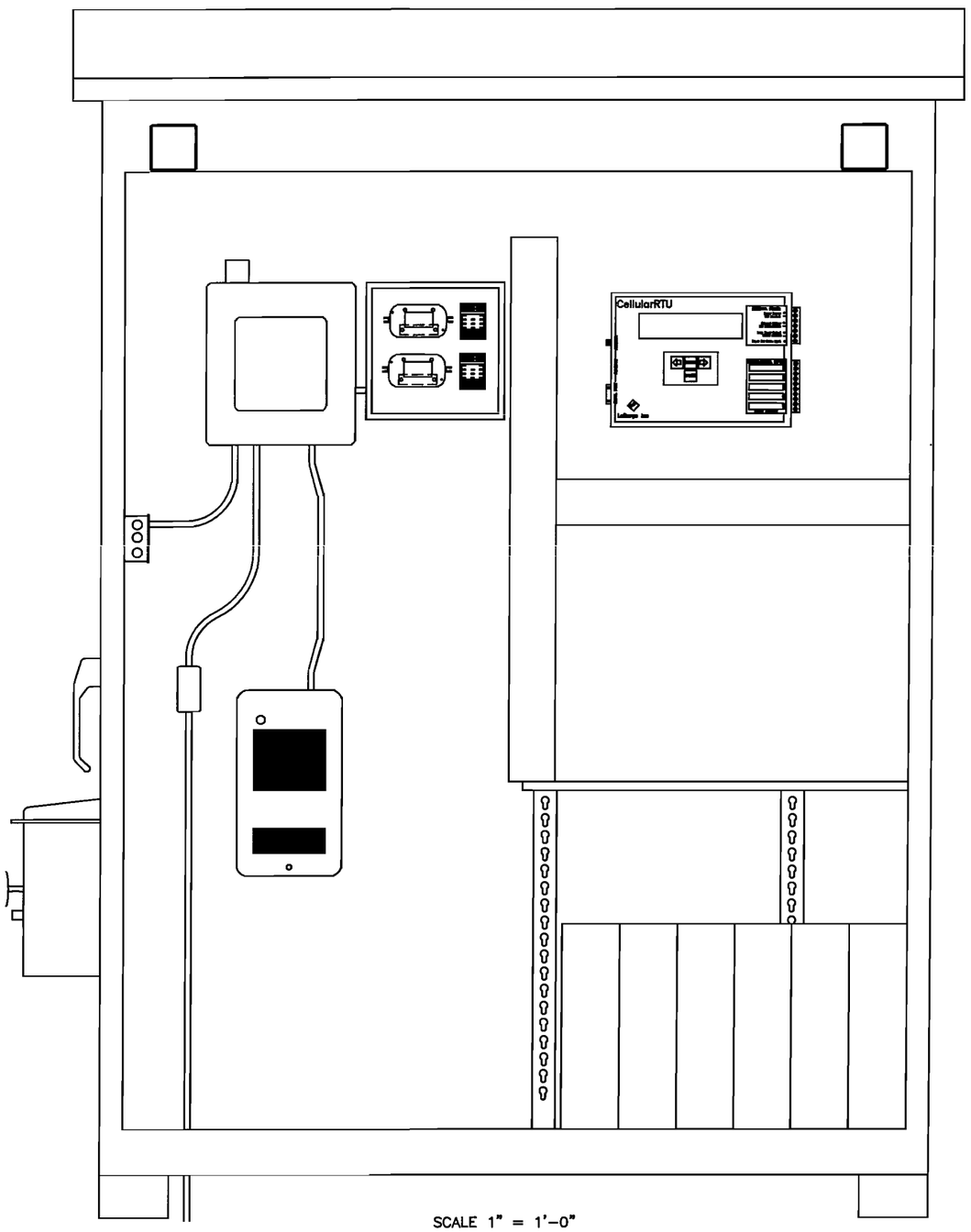

SCALE 1" = 1'-0"

HOFFMAN BOX DETAIL

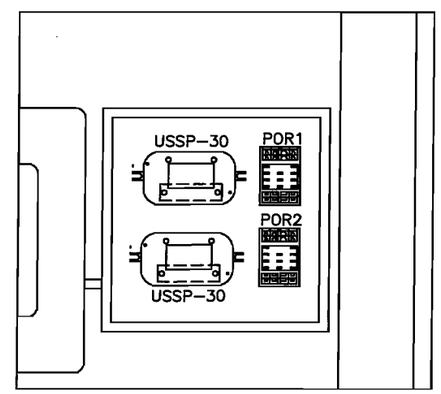

SCALE 3"=1'-0"

This drawing was created using CADD. All field and office changes are to be routed through Main Office in East Joliet. DO NOT make changes to this original copy without notifying the Engineer-Signals, Communications & Electrical.

NO	DESCRIPTION	BY	CHK'D	DATE
8				
7				
6				
5				
4				
3				
2				
1				
	AS IN SERVICE	TWH	TWH	11/07

REVISIONS

ELGIN, JOLIET & EASTERN RAILWAY COMPANY

WALL "C" LAYOUT DETAIL
OAKWOOD ROAD
LAKE ZURICH, ILLINOIS

ENGINEERING SERVICES
JOLIET, IL 60432
SCALE NONE

CHECKED BY TWH
IN CHARGE OF TWH

DRAWN BY TWH
DATE 2/16/07
CAD ID 2607943-013.DWG

FILE NO. 260794B

SHEET NO. 13

CONT'D ON --