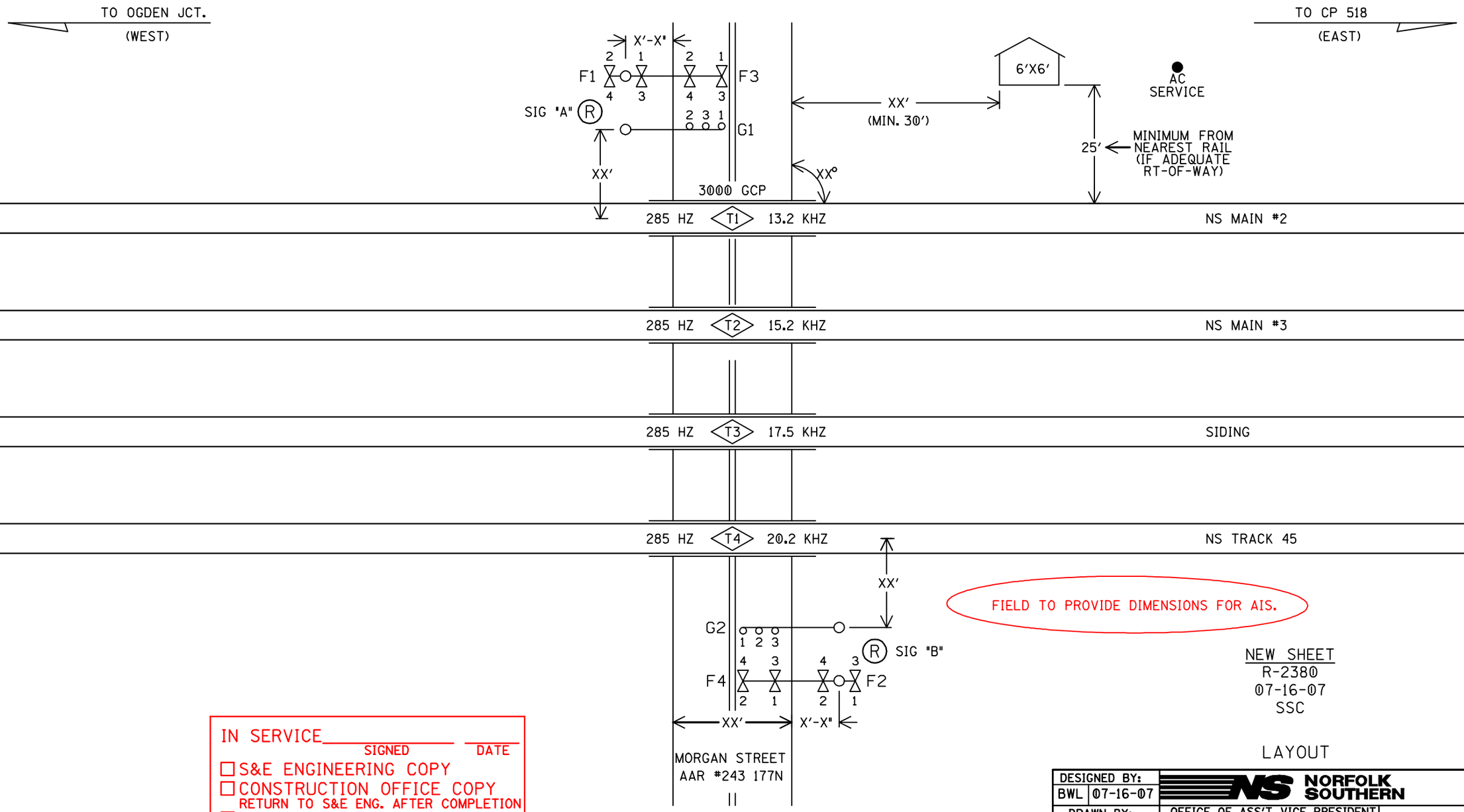

FIELD TO PROVIDE DIMENSIONS FOR AIS.

NEW SHEET
R-2380
07-16-07
SSC

LAYOUT

IN SERVICE_____ _____
SIGNED DATE

☐ S&E ENGINEERING COPY
☐ CONSTRUCTION OFFICE COPY
RETURN TO S&E ENG. AFTER COMPLETION
☐ FIELD COPY
RETURN TO CASE AFTER COMPLETION
☐ PROJECT ENGINEER COPY

(R) = REUSE EXISTING GATES AND FLASHERS.

DESIGNED BY: BWL 07-16-07	NORFOLK SOUTHERN		
DRAWN BY: SSC 07-16-07	OFFICE OF ASS'T. VICE PRESIDENT COMM. & SIGNAL, ATLANTA, GA.	M.P.:	UW0.65
CHECKED BY: CEL 08-08-07	WOOD TO CP 518 CFLGS AT MORGAN STREET		
IN SERVICE: - -	C.R. & I.I.T.	FILE No.	R-2380
	CADD or DWG. No. 32970006.01	SHEET No.	1 of 23

REVISION INITIALS

PROPERTY
PENNSYLVANIA R.R.

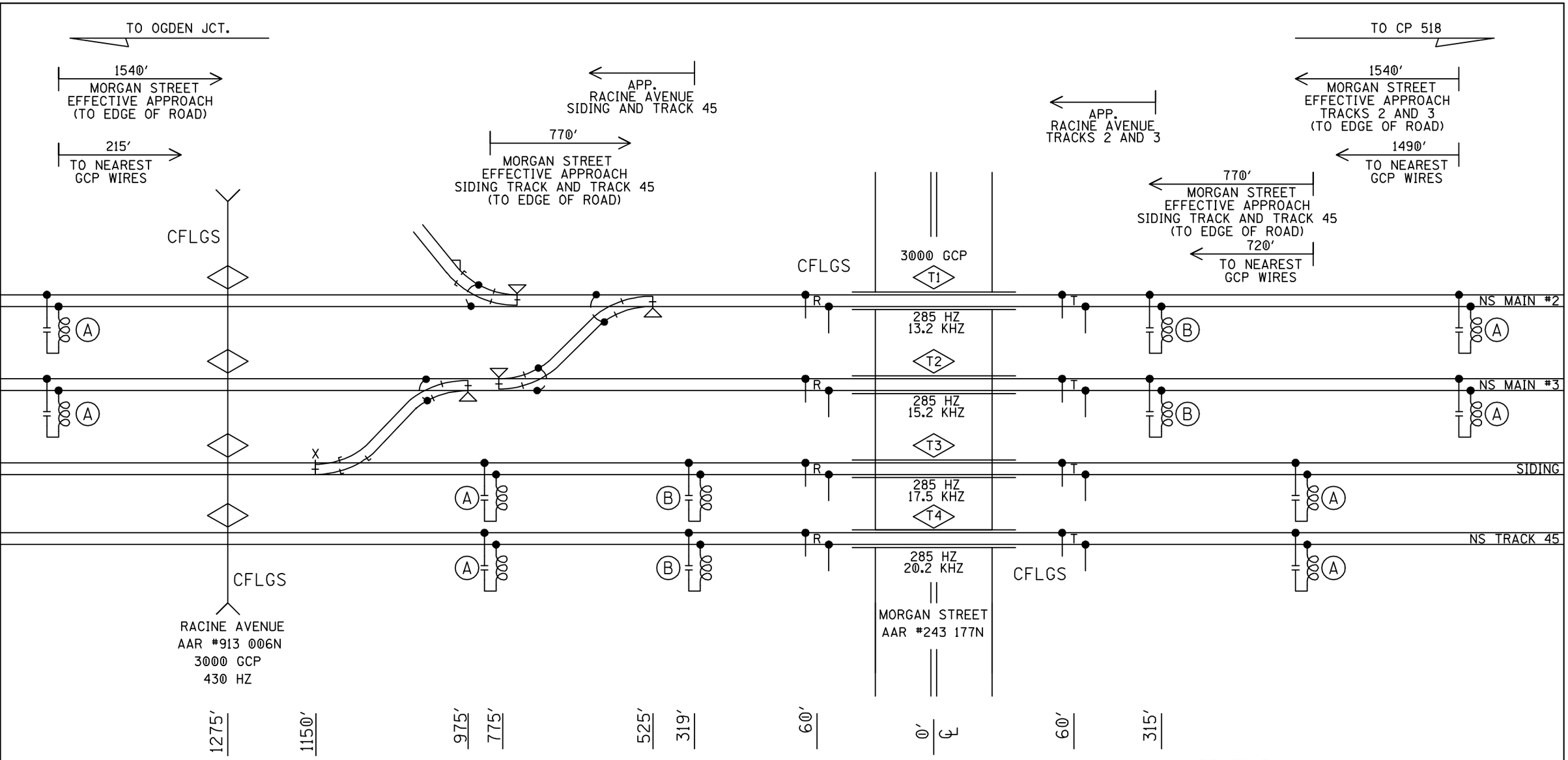

PROFILE

(A)– MF-NBS 62775-1543 (285HZ)

(B)– MF-NBS 62775-3497 (430HZ)

DESIGNED BY: BWL 07-16-07	NORFOLK SOUTHERN		
DRAWN BY: SSC 07-16-07	OFFICE OF ASS'T. VICE PRESIDENT COMM. & SIGNAL, ATLANTA, GA.	M.P.:	UW0.65
CHECKED BY: CEL 08-08-07	WOOD TO CP 518 CFLGS AT MORGAN STREET		
IN SERVICE: - -	C.R. & I.I.T.	FILE No.	R-2380
	CADD or DWG. No. 32970006.02	SHEET No.	2 of 23

REVISION INITIALS

PROPERTY
PENNSYLVANIA R.R.

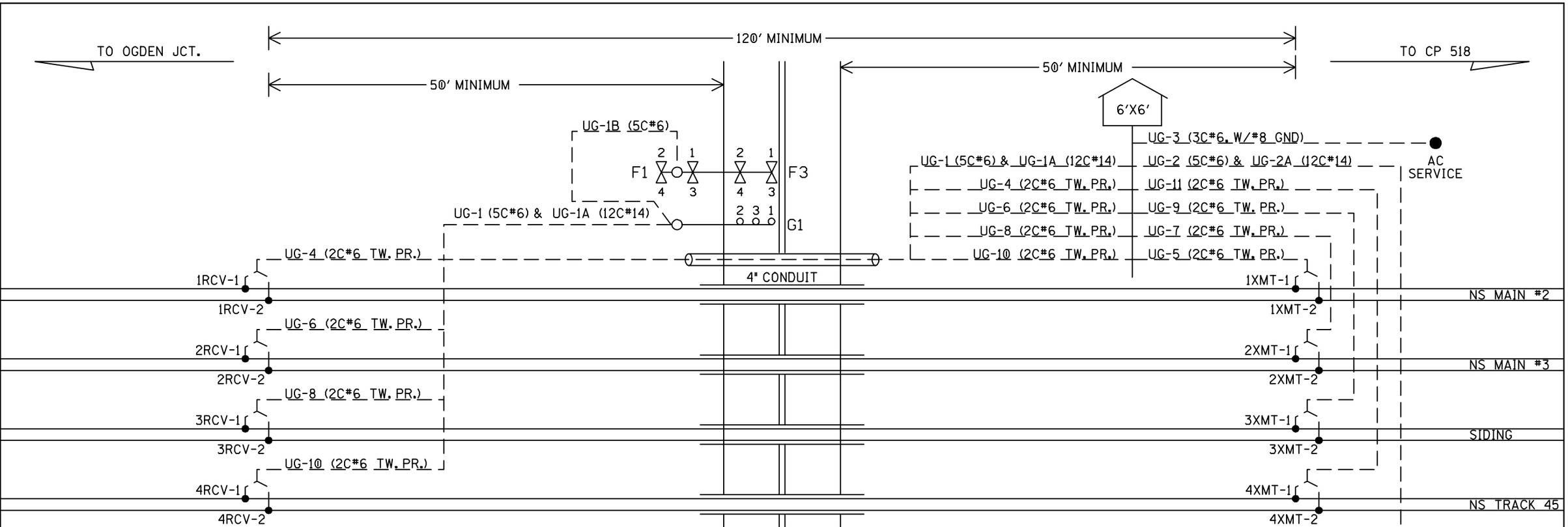

UG-1-5CUG #6
AEC
AEZ
AEB
B16-A
N16-A

UG-2-5CUG #6
BEC
BEZ
BEB
B16-B
N16-B

UG-1A-12CUG #14
AXG
AXX
1AXX
XGP1
AGBX120
AGNX120
AMTSS
SPARE
SPARE
SPARE
SPARE
SPARE

UG-2A-12CUG #14
BXG
BXX
1BXX
XGP1
XGP
BGBX120
BGNX120
BMTSS
SPARE
SPARE
SPARE
SPARE

UG-1B-5CUG #6
AEC
AEZ
AEB
SPARE
SPARE

UG-2B-5CUG #6
BEC
BEZ
BEB
SPARE
SPARE

UG-3-3CUG #6 W/#8 GND
BX120-A
BX120-B
NX120
GND

UG-5-TW. PR. #6
1XMT-1
1XMT-2

UG-6-TW. PR. #6
2RCV-1
2RCV-2

UG-8-TW. PR. #6
3RCV-1
3RCV-2

UG-10-TW. PR. #6
4RCV-1
4RCV-2

UG-4-TW. PR. #6
1RCV-1
1RCV-2

UG-7-TW. PR. #6
2XMT-1
2XMT-2

UG-9-TW. PR. #6
3XMT-1
3XMT-2

UG-11-TW. PR. #6
4XMT-1
4XMT-2

CABLE PLAN

DESIGNED BY: BWL 07-16-07	NORFOLK SOUTHERN		
DRAWN BY: SSC 07-16-07	OFFICE OF ASS'T. VICE PRESIDENT COMM. & SIGNAL, ATLANTA, GA.	M.P.:	UW0.65
CHECKED BY: CEL 08-08-07	WOOD TO CP 518 CFLGS AT MORGAN STREET		
IN SERVICE: - -	C.R. & I.I.T.	FILE No.	R-2308
	CADD or DWG. No. 32970006.03	SHEET No.	3 of 23

REVISION INITIALS										

PROPERTY
PENNSYLVANIA R.R.

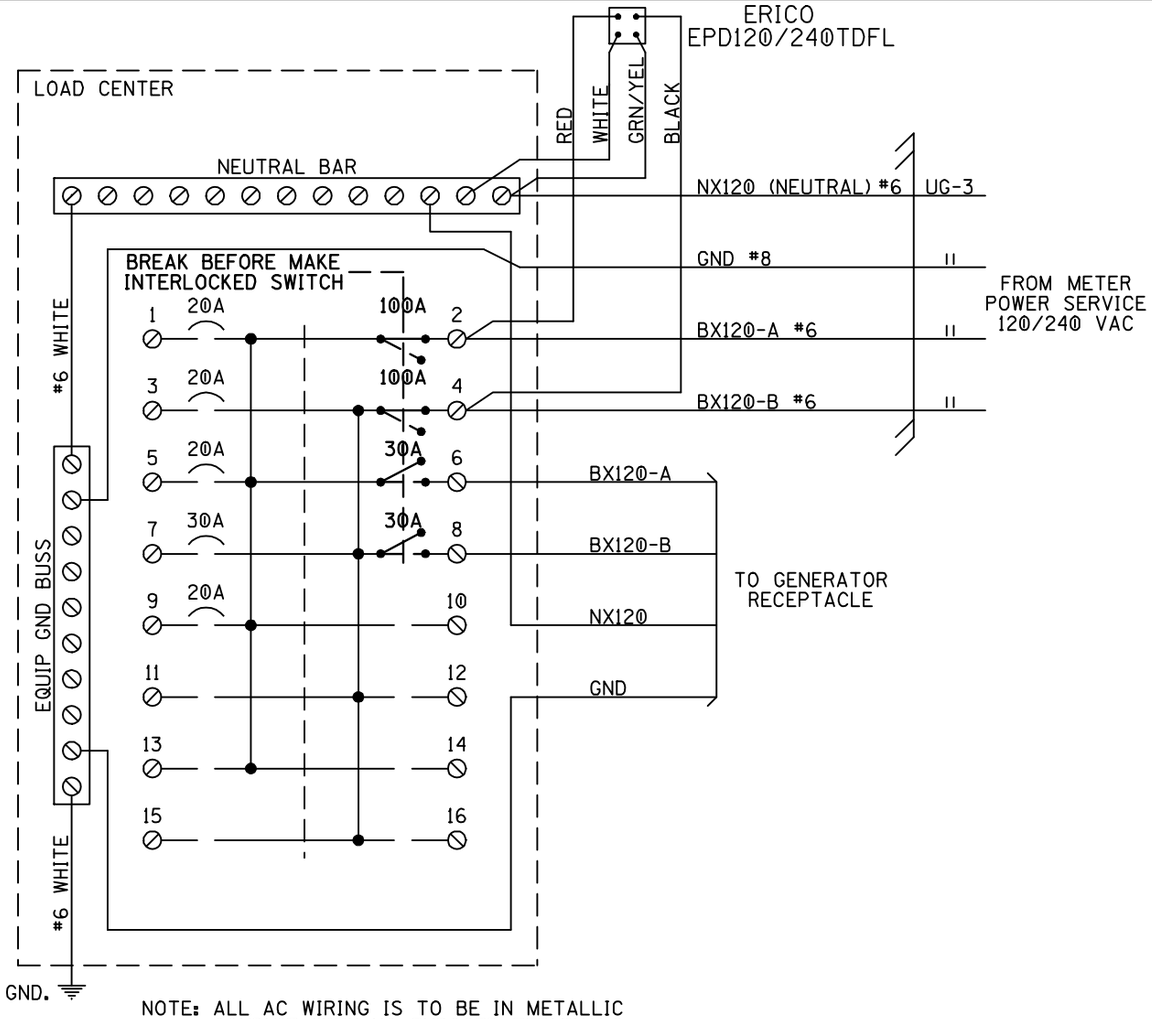

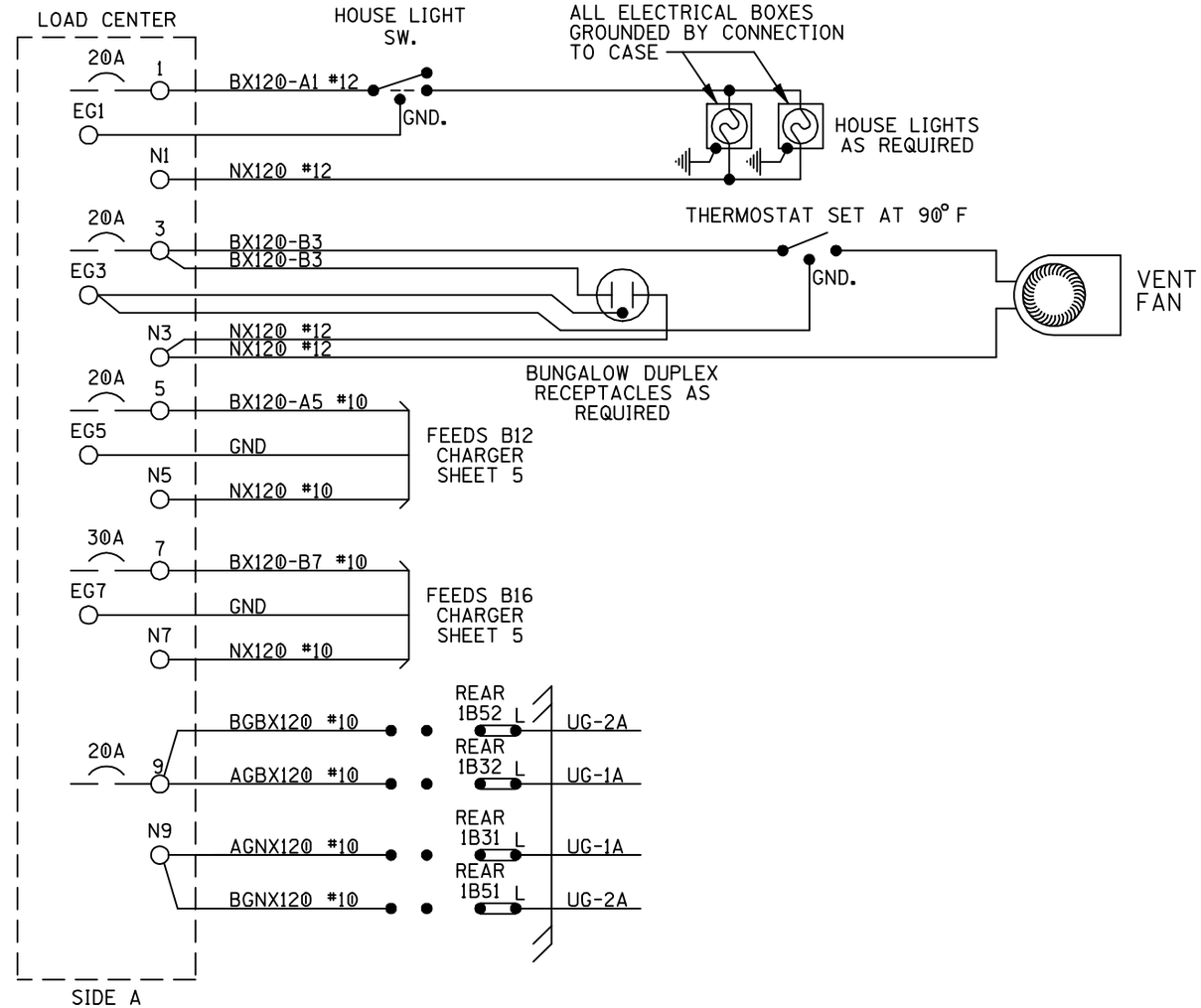

NOTE: ALL AC WIRING IS TO BE IN METALLIC CONDUIT WITH NO EXPOSED TERMINALS. ALL AC 120V AND 240V EQUIPMENT IS TO BE PROPERLY GROUNDED.

SQUARE "D" PART NUMBERS:

LOAD CENTER——Q0116L125G
10A 1P CIR BKR——Q0110
20A 1P CIR BKR——Q0120
30A 1P CIR BKR——Q0130
30A 2P CIR BKR——Q0230
60A 2P CIR BKR——Q0260
100A 2P CIR BKR——Q02100
MECH INTERLOCK——PK4DTIM4LA

GENERATOR RECEPTACLE:
MALE CONNECTOR - NEMA L1430-FI

LOAD CENTER WIRING

DESIGNED BY: BWL 07-16-07	NORFOLK SOUTHERN		
DRAWN BY: SSC 07-16-07	OFFICE OF ASS'T. VICE PRESIDENT COMM. & SIGNAL, ATLANTA, GA.	M.P.:	UW0.65
CHECKED BY: CEL 08-08-07	WOOD TO CP 518 CFLGS AT MORGAN STREET		
IN SERVICE: - -	C.R. & I.I.T.	FILE No.	R-2380
	CADD or DWG. No. 32970006.04	SHEET No.	4 of 23

REVISION INITIALS												PROPERTY PENNSYLVANIA R.R.

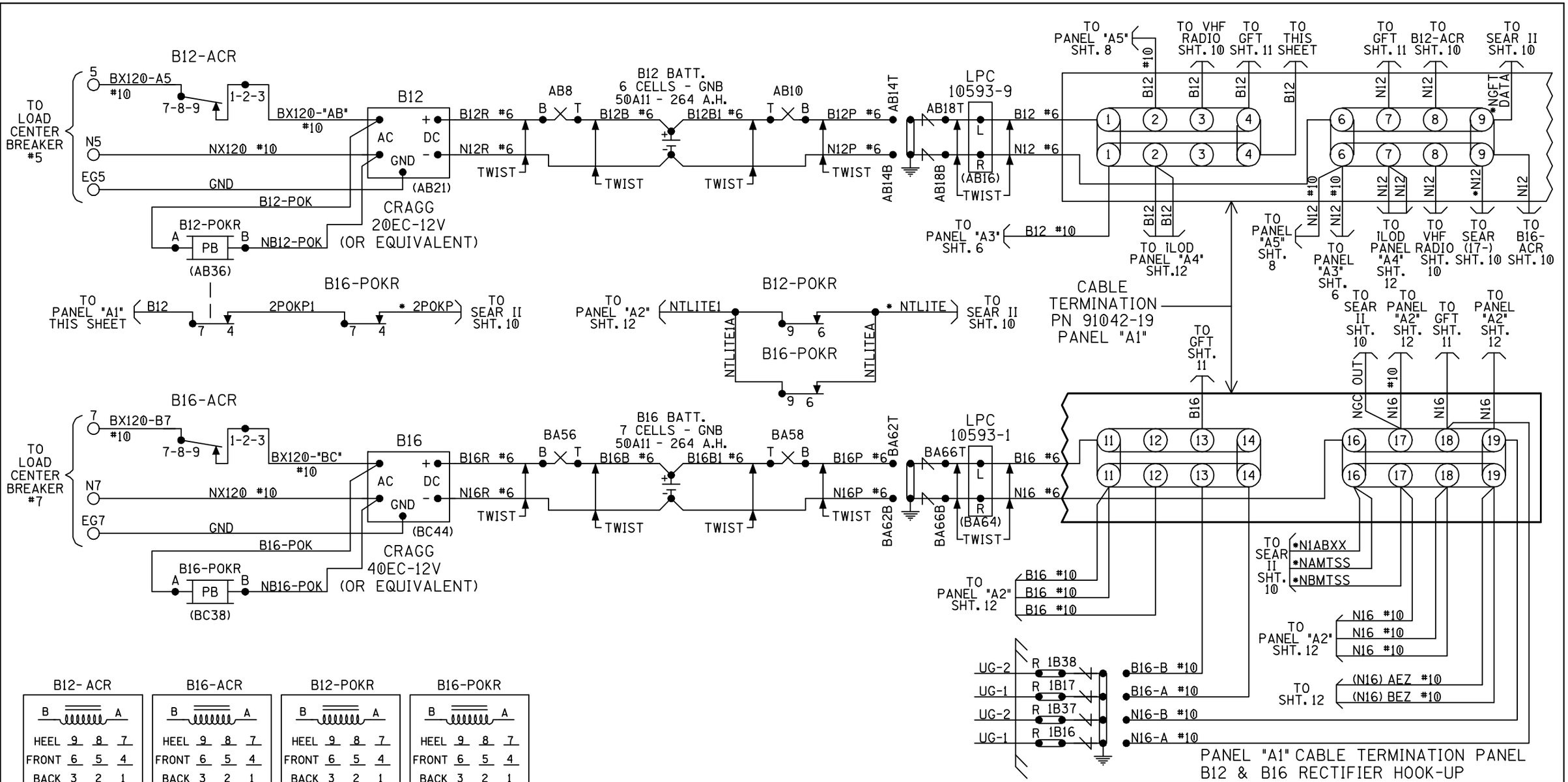

B12-ACR	B16-ACR	B12-POKR	B16-POKR
B A	B A	B A	B A
HEEL 9 8 7	HEEL 9 8 7	HEEL 9 8 7	HEEL 9 8 7
FRONT 6 5 4	FRONT 6 5 4	FRONT 6 5 4	FRONT 6 5 4
BACK 3 2 1	BACK 3 2 1	BACK 3 2 1	BACK 3 2 1
POTTER BRUMFIELD RELAY (REAR VIEW) KUMP-14D18-12	POTTER BRUMFIELD RELAY (REAR VIEW) KUMP-14D18-12	POTTER BRUMFIELD RELAY (REAR VIEW) KUMP-14A18-120	POTTER BRUMFIELD RELAY (REAR VIEW) KUMP-14A18-120

NOTES:
ALL WIRING TO BE #16AWG UNLESS NOTED OTHERWISE.
* = CABLE PROVIDED WITH SEAR II

DESIGNED BY: BWL 07-16-07	NORFOLK SOUTHERN
DRAWN BY: SSC 07-16-07	OFFICE OF ASS'T. VICE PRESIDENT COMM. & SIGNAL, ATLANTA, GA. — M.P.: UW0.65
CHECKED BY: CEL 08-08-07	WOOD TO CP 518 CFLGS AT MORGAN STREET
IN SERVICE: - -	C.R. & I.I.T. — FILE No. R-2380
	CADD or DWG. No. 32970006.05 — SHEET No. 5 of 23

REVISION INITIALS

PROPERTY
PENNSYLVANIA R.R.

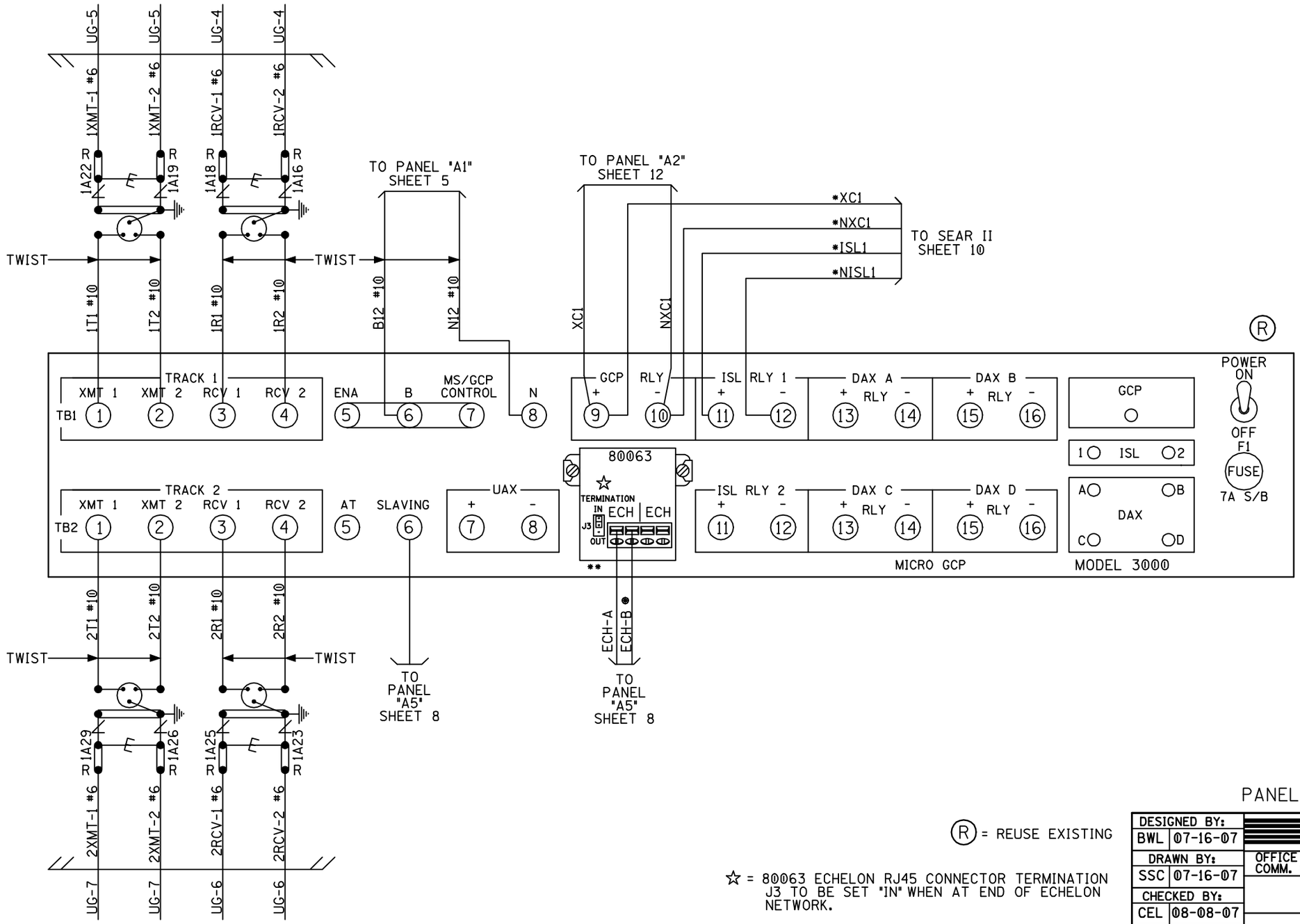

3000 GCP "A3"

T1 IF = 13.2 KHZ
T2 IF = 15.2 KHZ

NOTES:
ALL WIRING TO BE #16AWG UNLESS NOTED OTHERWISE.

* = CABLE PROVIDED WITH SEAR II

** = 80063 ADAPTER CARD AND E-LEVEL OR LATER SOFTWARE NEEDED FOR SEAR II / ECHELON CAPABILITIES.

● = ECHELON CONNECTIONS NOT TO EXCEED 53' IN LENGTH AND TOTAL LENGTH NOT TO EXCEED 430' WITH A MAXIMUM OF 8 NODES, RECOMMEND USE BELDEN WIRE CABLE #8461 OR EQUIVALENT.

PANEL "A3" 3000 GCP 1 HOOK-UP

Ⓡ = REUSE EXISTING

☆ = 80063 ECHELON RJ45 CONNECTOR TERMINATION J3 TO BE SET "IN" WHEN AT END OF ECHELON NETWORK.

DESIGNED BY: BWL 07-16-07	NORFOLK SOUTHERN		
DRAWN BY: SSC 07-16-07	OFFICE OF ASS'T. VICE PRESIDENT COMM. & SIGNAL, ATLANTA, GA.	M.P.:	UW0.65
CHECKED BY: CEL 08-08-07	WOOD TO CP 518 CFLGS AT MORGAN STREET		
IN SERVICE: - -	C.R. & I.I.T.	FILE No.	R-2380
	CADD or DWG. No. 32970006.06	SHEET No.	6 of 23

REVISION INITIALS

PROPERTY
PENNSYLVANIA R.R.

3000 PROGRAMMING CHART	(LEVEL: J)
NUMBER OF TRACK TRANSCEIVERS	2
T1: FREQUENCY	285Hz
T2: FREQUENCY	285Hz
T1: UNIDIRECTIONAL/BIDIRECTIONAL	BI
T2: UNIDIRECTIONAL/BIDIRECTIONAL	BI
T1: XMIT LEVEL (MAX/MED)	HIGH
T2: XMIT LEVEL (MAX/MED)	HIGH
T1: PREDICTOR/MOTION SENSOR	PRED
T2: PREDICTOR/MOTION SENSOR	PRED
T1: WARNING TIME	34 Sec
T2: WARNING TIME	34 Sec
T1: APPROACH DISTANCE	1490 Ft
T2: APPROACH DISTANCE	1490 Ft
UAX1 PICKUP DELAY (UAX) (0 = OFF)	0 Sec
ENA/UAX2 DELAY (0 = ENA)	0 Sec
T1: ISLAND DISTANCE	120 Ft
T2: ISLAND DISTANCE	120 Ft
NUMBER OF DAX'S	0 Ea
DAX A TRACK ASSIGNMENT (T1/T2)	---
DAX A DISTANCE (0 = PREEMPT)	Ft
DAX A WARNING TIME	Sec
DAX B TRACK ASSIGNMENT (T1/T2)	---
DAX B DISTANCE (0 = PREEMPT)	Ft
DAX B WARNING TIME	Sec
DAX C TRACK ASSIGNMENT (T1/T2)	---
DAX C DISTANCE (0 = PREEMPT)	Ft
DAX C WARNING TIME	Sec
DAX D TRACK ASSIGNMENT (T1/T2)	---
DAX D DISTANCE (0 = PREEMPT)	Ft
DAX D WARNING TIME	Sec
SLAVING (MASTER/SLAVE)	MASTER
PASSWORD ENABLED	NO
RECORDER INSTALLED	NO

EXPANDED PROGRAMMING

T1: SWITCH TO MS (ENTER EZ VALUE)	10 %	
T2: SWITCH TO MS (ENTER EZ VALUE)	10 %	
T1: TRANSFER DELAY MS TO GCP (0 = OFF)	0 Sec	
T2: TRANSFER DELAY MS TO GCP (0 = OFF)	0 Sec	
T1: TRANSFER MS TO GCP PRIME (ON/OFF)	---	(1)
T2: TRANSFER MS TO GCP PRIME (ON/OFF)	---	(1)
T1: TRANSFER MS TO GCP DAX A (ON/OFF)	---	(2)
T2: TRANSFER MS TO GCP DAX A (ON/OFF)	---	(2)
T1: TRANSFER MS TO GCP DAX B (ON/OFF)	---	(2)
T2: TRANSFER MS TO GCP DAX B (ON/OFF)	---	(2)
T1: TRANSFER MS TO GCP DAX C (ON/OFF)	---	(2)
T2: TRANSFER MS TO GCP DAX C (ON/OFF)	---	(2)
T1: TRANSFER MS TO GCP DAX D (ON/OFF)	---	(2)
T2: TRANSFER MS TO GCP DAX D (ON/OFF)	---	(2)
T1: PRIME PREDICTION OFFSET (0 = OFF)	0 Ft	
T2: PRIME PREDICTION OFFSET (0 = OFF)	0 Ft	
PICKUP DELAY PRIME	15 Sec	
PICKUP DELAY DAX A	-- Sec	
PICKUP DELAY DAX B	-- Sec	
PICKUP DELAY DAX C	-- Sec	
PICKUP DELAY DAX D	-- Sec	
T1: ENHANCED DETECTION (ON/OFF)	OFF	
T2: ENHANCED DETECTION (ON/OFF)	OFF	
BACK-TO-BACK T1 AND T2 (NO/YES)	---	(3)
T1: STATION STOP TIMER	10 Sec	(3)
T2: STATION STOP TIMER	10 Sec	(3)
T1: NUMBER OF TRACK WIRES (4/6)	4	
T2: NUMBER OF TRACK WIRES (4/6)	4	
T1: LOW EX ADJUSTMENT	0	
T2: LOW EX ADJUSTMENT	0	
T1: LOW EZ DETECTION	OFF	
T2: LOW EZ DETECTION	OFF	
T1: LOW EZ DETECTION TIMER (ON/OFF)	10 Min	(4)
T2: LOW EZ DETECTION TIMER (ON/OFF)	10 Min	(4)
T1: POSITIVE START (EZ LEVEL) (0 = OFF)	0	
T2: POSITIVE START (EZ LEVEL) (0 = OFF)	0	
T1: POSITIVE START TIMEOUT (0 = NONE)	-- Min	(5)
T2: POSITIVE START TIMEOUT (0 = NONE)	-- Min	(5)
SET AT OPERATION (NORMAL/DIAGNOSTIC)	NORMAL	
DIAGNOSTIC MESSAGES (ON/OFF)	ON	
DAX MESSAGES (ON/OFF)	ON	
ADVANCE PREEMPT TIMER (0 = OFF)	0	
T1: MOTION SENSING LEVEL (0 = NORMAL)	0 %	
T2: MOTION SENSING LEVEL (0 = NORMAL)	0 %	

✳ = 1ST SLOT AT LEFT END OF BAY

MODEL 3000 GCP MODULE ASSEMBLIES

MODULES POSITION	M1	M2	M3	M4	M5	M6	M7	M8	M9	M10
MODULE NUMBERS	80211-f(1) ✳ ISL	80211-f(2) ISL	80012 T/R 1	80012 T/R 2	80013 RLY DRV	80214 PROCS	80255 REC-INTF	80016 (1) DAX	80016 (2)DAX	80020 +80017
MODULES USED	X	X	X	X	X	X	X			X

**

NOTES:

1 - SEE IPI INSTRUCTION AND INSTALLATION MANUAL FOR 80211 ISLAND CALIBRATION PROCEDURE.

2 - TOGGLE SWITCH ON MOTHER BOARD:
UP = DUAL FREQ.
DOWN = SINGLE FREQ.

** = 80214 & 80255 (WITH JUMPER) CARDS AND E-LEVEL OR LATER SOFTWARE NEEDED FOR SEAR II / ECHELON CAPABILITIES.

3000 PROGRAMMING NOTES:

1) AVAILALBE WHEN "TRANSFER DELAY MS TO GCP" AND "PRIME PREDICTION OFFSET" IS ON
2) AVAILABLE WHEN "TRANSFER DELAY MS TO GCP" AND DAX DISTANCE IS GREATER THAN ZERO
3) AVAILABLE WHEN "ENHANCED DETECTION" IS ON
4) AVAILABLE WHEN "LOW EZ DETECTION" IS ON
5) AVAILABLE WHEN "POSITIVE START" IS ON

PANEL "A3" 3000 GCP 1 SET-UP

DESIGNED BY: BWL 07-16-07	NORFOLK SOUTHERN	
DRAWN BY: SSC 07-16-07	OFFICE OF ASS'T. VICE PRESIDENT COMM. & SIGNAL, ATLANTA, GA.	M.P.: UW0.65
CHECKED BY: CEL 08-08-07	WOOD TO CP 518 CFLGS AT MORGAN STREET	
IN SERVICE: - -	C.R. & I.I.T.	FILE No. R-2380
	CADD or DWG. No. 32970006.07	SHEET No. 7 of 23

REVISION INITIALS

PROPERTY
PENNSYLVANIA R.R.

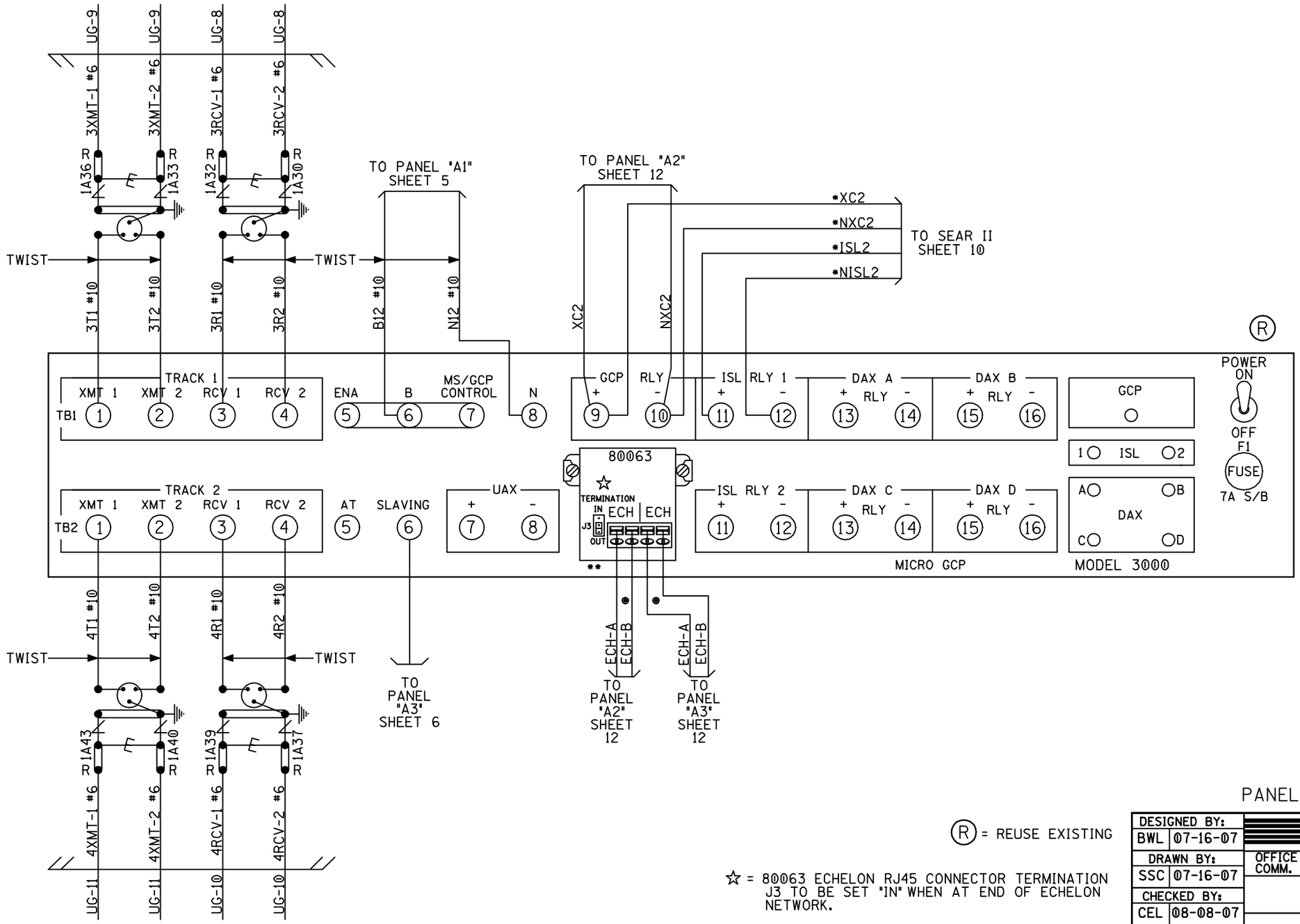

3000 GCP "A5"

T1 IF = 17.5 KHZ
T2 IF = 20.2 KHZ

NOTES:
ALL WIRING TO BE #16AWG UNLESS NOTED OTHERWISE.

* = CABLE PROVIDED WITH SEAR II

** = 80063 ADAPTER CARD AND E-LEVEL OR LATER SOFTWARE NEEDED FOR SEAR II / ECHELON CAPABILITIES.

● = ECHELON CONNECTIONS NOT TO EXCEED 53' IN LENGTH AND TOTAL LENGTH NOT TO EXCEED 430' WITH A MAXIMUM OF 8 NODES, RECOMMEND USE BELDEN WIRE CABLE #8461 OR EQUIVALENT.

PANEL "A5" 3000 GCP 2 HOOK-UP

Ⓡ = REUSE EXISTING

☆ = 80063 ECHELON RJ45 CONNECTOR TERMINATION J3 TO BE SET "IN" WHEN AT END OF ECHELON NETWORK.

DESIGNED BY: BWL 07-16-07	NORFOLK SOUTHERN	
DRAWN BY: SSC 07-16-07	OFFICE OF ASS'T. VICE PRESIDENT COMM. & SIGNAL, ATLANTA, GA.	M.P.: UW0.65
CHECKED BY: CEL 08-08-07	WOOD TO CP 518 CFLGS AT MORGAN STREET	
IN SERVICE: - -	C.R. & I.I.T.	FILE No. R-2380
	CADD or DWG. No. 32970006.08	SHEET No. 8 of 23

REVISION INITIALS

PROPERTY
PENNSYLVANIA R.R.

3000 PROGRAMMING CHART	(LEVEL: J)
NUMBER OF TRACK TRANSCEIVERS	2
T1: FREQUENCY	285Hz
T2: FREQUENCY	285Hz
T1: UNIDIRECTIONAL/BIDIRECTIONAL	BI
T2: UNIDIRECTIONAL/BIDIRECTIONAL	BI
T1: XMIT LEVEL (MAX/MED)	HIGH
T2: XMIT LEVEL (MAX/MED)	HIGH
T1: PREDICTOR/MOTION SENSOR	PRED
T2: PREDICTOR/MOTION SENSOR	PRED
T1: WARNING TIME	34 Sec
T2: WARNING TIME	34 Sec
T1: APPROACH DISTANCE	720 Ft
T2: APPROACH DISTANCE	720 Ft
UAX1 PICKUP DELAY (UAX) (0 = OFF)	0 Sec
ENA/UAX2 DELAY (0 = ENA)	0 Sec
T1: ISLAND DISTANCE	120 Ft
T2: ISLAND DISTANCE	120 Ft
NUMBER OF DAX'S	0 Ea
DAX A TRACK ASSIGNMENT (T1/T2)	---
DAX A DISTANCE (0 = PREEMPT)	Ft
DAX A WARNING TIME	Sec
DAX B TRACK ASSIGNMENT (T1/T2)	---
DAX B DISTANCE (0 = PREEMPT)	Ft
DAX B WARNING TIME	Sec
DAX C TRACK ASSIGNMENT (T1/T2)	---
DAX C DISTANCE (0 = PREEMPT)	Ft
DAX C WARNING TIME	Sec
DAX D TRACK ASSIGNMENT (T1/T2)	---
DAX D DISTANCE (0 = PREEMPT)	Ft
DAX D WARNING TIME	Sec
SLAVING (MASTER/SLAVE)	SLAVE
PASSWORD ENABLED	NO
RECORDER INSTALLED	NO

EXPANDED PROGRAMMING

T1: SWITCH TO MS (ENTER EZ VALUE)	10 %	
T2: SWITCH TO MS (ENTER EZ VALUE)	10 %	
T1: TRANSFER DELAY MS TO GCP (0 = OFF)	0 Sec	
T2: TRANSFER DELAY MS TO GCP (0 = OFF)	0 Sec	
T1: TRANSFER MS TO GCP PRIME (ON/OFF)	---	(1)
T2: TRANSFER MS TO GCP PRIME (ON/OFF)	---	(1)
T1: TRANSFER MS TO GCP DAX A (ON/OFF)	---	(2)
T2: TRANSFER MS TO GCP DAX A (ON/OFF)	---	(2)
T1: TRANSFER MS TO GCP DAX B (ON/OFF)	---	(2)
T2: TRANSFER MS TO GCP DAX B (ON/OFF)	---	(2)
T1: TRANSFER MS TO GCP DAX C (ON/OFF)	---	(2)
T2: TRANSFER MS TO GCP DAX C (ON/OFF)	---	(2)
T1: TRANSFER MS TO GCP DAX D (ON/OFF)	---	(2)
T2: TRANSFER MS TO GCP DAX D (ON/OFF)	---	(2)
T1: PRIME PREDICTION OFFSET (0 = OFF)	0 Ft	
T2: PRIME PREDICTION OFFSET (0 = OFF)	0 Ft	
PICKUP DELAY PRIME	15 Sec	
PICKUP DELAY DAX A	-- Sec	
PICKUP DELAY DAX B	-- Sec	
PICKUP DELAY DAX C	-- Sec	
PICKUP DELAY DAX D	-- Sec	
T1: ENHANCED DETECTION (ON/OFF)	OFF	
T2: ENHANCED DETECTION (ON/OFF)	OFF	
BACK-TO-BACK T1 AND T2 (NO/YES)	---	(3)
T1: STATION STOP TIMER	10 Sec	(3)
T2: STATION STOP TIMER	10 Sec	(3)
T1: NUMBER OF TRACK WIRES (4/6)	4	
T2: NUMBER OF TRACK WIRES (4/6)	4	
T1: LOW EX ADJUSTMENT	0	
T2: LOW EX ADJUSTMENT	0	
T1: LOW EZ DETECTION	OFF	
T2: LOW EZ DETECTION	OFF	
T1: LOW EZ DETECTION TIMER (ON/OFF)	10 Min	(4)
T2: LOW EZ DETECTION TIMER (ON/OFF)	10 Min	(4)
T1: POSITIVE START (EZ LEVEL) (0 = OFF)	0	
T2: POSITIVE START (EZ LEVEL) (0 = OFF)	0	
T1: POSITIVE START TIMEOUT (0 = NONE)	-- Min	(5)
T2: POSITIVE START TIMEOUT (0 = NONE)	-- Min	(5)
SET AT OPERATION (NORMAL/DIAGNOSTIC)	NORMAL	
DIAGNOSTIC MESSAGES (ON/OFF)	ON	
DAX MESSAGES (ON/OFF)	ON	
ADVANCE PREEMPT TIMER (0 = OFF)	0	
T1: MOTION SENSING LEVEL (0 = NORMAL)	0 %	
T2: MOTION SENSING LEVEL (0 = NORMAL)	0 %	

✳ = 1ST SLOT AT LEFT END OF BAY

MODEL 3000 GCP MODULE ASSEMBLIES

MODULES POSITION	M1	M2	M3	M4	M5	M6	M7	M8	M9	M10
MODULE NUMBERS	80211-f(1) ✳ ISL	80211-f(2) ISL	80012 T/R 1	80012 T/R 2	80013 RLY DRV	80214 PROCS	80255 REC-INTF	80016 (1) DAX	80016 (2)DAX	80020 +80017
MODULES USED	X	X	X	X	X	X	X			X

**

NOTES:

1 - SEE IPI INSTRUCTION AND INSTALLATION MANUAL FOR 80211 ISLAND CALIBRATION PROCEDURE.

2 - TOGGLE SWITCH ON MOTHER BOARD:
UP = DUAL FREQ.
DOWN = SINGLE FREQ.

** = 80214 & 80255 (WITH JUMPER) CARDS AND E-LEVEL OR LATER SOFTWARE NEEDED FOR SEAR II / ECHELON CAPABILITIES.

3000 PROGRAMMING NOTES:

1) AVAILALBE WHEN "TRANSFER DELAY MS TO GCP" AND "PRIME PREDICTION OFFSET" IS ON
2) AVAILABLE WHEN "TRANSFER DELAY MS TO GCP" AND DAX DISTANCE IS GREATER THAN ZERO
3) AVAILABLE WHEN "ENHANCED DETECTION" IS ON
4) AVAILABLE WHEN "LOW EZ DETECTION" IS ON
5) AVAILABLE WHEN "POSITIVE START" IS ON

PANEL "A5" 3000 GCP 2 SET-UP

DESIGNED BY: BWL 07-16-07	NORFOLK SOUTHERN	
DRAWN BY: SSC 07-16-07	OFFICE OF ASS'T. VICE PRESIDENT COMM. & SIGNAL, ATLANTA, GA.	M.P.: UW0.65
CHECKED BY: CEL 08-08-07	WOOD TO CP 518 CFLGS AT MORGAN STREET	
IN SERVICE: - -	C.R. & I.I.T.	FILE No. R-2380
	CADD or DWG. No. 32970006.09	SHEET No. 9 of 23

REVISION INITIALS

PROPERTY
PENNSYLVANIA R.R.

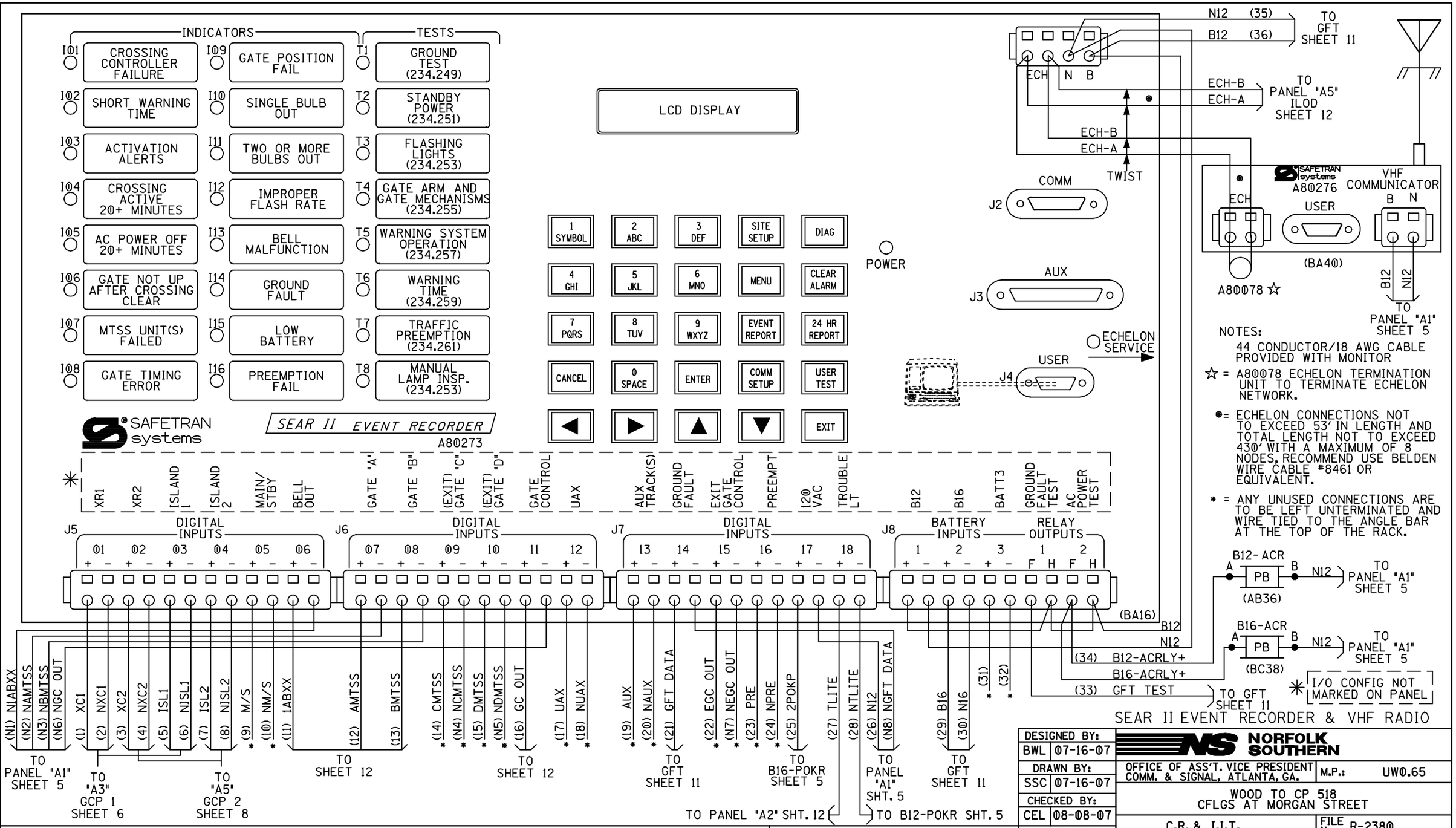

DESIGNED BY: BWL 07-16-07	NORFOLK SOUTHERN		
DRAWN BY: SSC 07-16-07	OFFICE OF ASS'T. VICE PRESIDENT COMM. & SIGNAL, ATLANTA, GA.	M.P.:	UW0.65
CHECKED BY: CEL 08-08-07	WOOD TO CP 518 CFLGS AT MORGAN STREET		
IN SERVICE: - -	C.R. & I.I.T.	FILE No.	R-2380
	CADD or DWG. No. 32970006.10	SHEET No.	10 of 23

REVISION INITIALS

PROPERTY PENNSYLVANIA R.R.

SITE SET UP PROCEDURE		
	FUNCTION	LED DISPLAY
	DATE	- -
	TIME	:
	DAYLIGHT SAVINGS TIME	YES
	TIME ZONE	EST
	SITE NAME	MORGAN STREET
	DOT NUMBER	243 177N
	MILEPOST	UW0.65
	TESTER TYPE	CROSSING
	DATE FORMAT	MM-DD-YYYY
	TEMP FORMAT	FAHRENHEIT
	SITE TYPE	NO COMMUNICATION
	SITE ATCS	7.RRR.LLL.GGG.03.01
***	OFFICE ATCS ADDRESS	2.000.00.0000
***	POLL ID	1
***	OFFICE F8/F9	YES
***	OFFICE COMM DEVICE	SPREAD SPECTRUM RADIO
***	DIAL MODEM PORT	AUX/COMM
***	PHONE NUMBER	(OFFICE NUMBER)
***	INIT STRING	(LEAVE BLANK)
***	BACKUP SITE ADDRESS 1	
***	BACKUP SITE ADDRESS 2	
***	FIELD COMM	
****	USER PORT	BAUD 57600, N, 8, 1, NONE
****	AUX PORT	BAUD 9600, N, 8, 1, NONE
****	COMM PORT	BAUD 9600, N, 8, 1, NONE

VERIFY NUMBER OF BULBS	
CURR 1: LAMP SET UP	11 BULBS
CURR 2: LAMP SET UP	11 BULBS

CONTROL SYSTEM CONFIGURATION MENU QUESTIONS	
THE QUESTION	SELECT FROM MENU OPTION
RESET NAMES AND MODULES?	YES
NUMBER OF TRACKS?	4
NUMBER OF XR INPUTS?	2
CONSTANT WARNING DEVICE	GCP
CROSSING CONTROLLER?	SSCC III (A, PLUS)
MAIN / STANDBY	NO
AUXILIARY TRACKS?	NO
AUX TRACK	(SET IF AUX TRACKS = YES)
GATES?	2
EXIT GATES?	0
UAX?	NOT INSTALLED
BATTERY BANKS?	2
PREEMPTION?	NO
ILOD MODULES?	2
LAMP TYPE?	NORMAL
AUTO INSPECTIONS?	YES
BELL SENSOR?	** 0
BELL SENSOR INPUT 7	** NO
BELL SENSOR INPUT 8	** NO
BELL SENSOR INPUT 9	** NO
BELL SENSOR INPUT 10	** NO
BELL ON?	GATES LOWERING
GATE TIP SENSORS?	NO
GROUND FAULT DETECTORS?	YES
ROAD CHANNEL FREQUENCY	161.475 MHZ
MAINT. CHANNEL FREQUENCY	NONE
FULL APPROACH MOVE ALARMS	ACTIVATE
SSCC ATCS ADDRESS	7.RRR.LLL.GGG.07.01

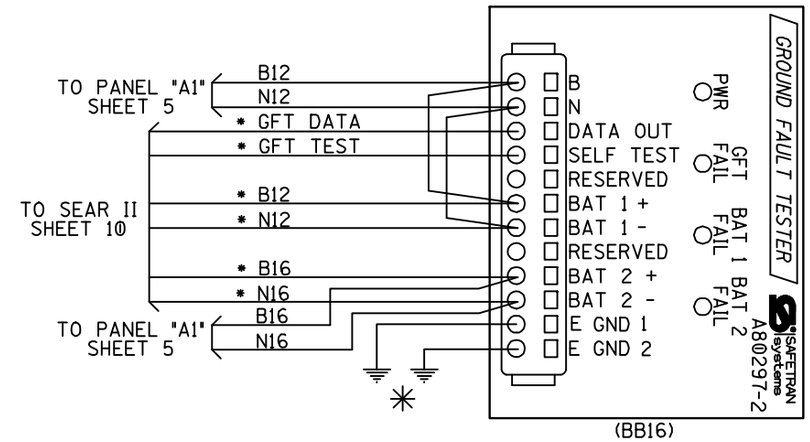

VERIFY THE BATTERY SUPPLY VOLTAGES	
B12 BATTERY VOLTAGE AT INPUT DC1	VOLT 1: .
B16 BATTERY VOLTAGE AT INPUT DC2	VOLT 2: .

NOTES:
ALL WIRING TO BE #16AWG
UNLESS NOTED OTHERWISE

* = CABLE PROVIDED WITH SEAR II

** = OPTIONS: IF BELL SENSOR = 0, THEN BELL FIELDS ARE NOT USED.

*** = IF SITE TYPE = NO COMMUNICATION, THEN THESE OPTIONS ARE NOT DISPLAYED

**** = THESE SETTINGS SHOULD BE LEFT AT THE DEFAULT SETTING.

✳ = CONNECT "E GND 1" AND "E GND 2" TO INDEPENDENT GROUND POINTS ON SIDE A AND SIDE B.

SEAR II SET UP CHART
& GROUND FAULT TESTER

DESIGNED BY: BWL 07-16-07	NORFOLK SOUTHERN		
DRAWN BY: SSC 07-16-07	OFFICE OF ASS'T. VICE PRESIDENT COMM. & SIGNAL, ATLANTA, GA.	M.P.:	UW0.65
CHECKED BY: CEL 08-08-07	WOOD TO CP 518 CFLGS AT MORGAN STREET		
IN SERVICE: - -	C.R. & I.I.T.	FILE No.	R-2380
	CADD or DWG. No. 32970006.11	SHEET No.	11 of 23

REVISION INITIALS											

PROPERTY
PENNSYLVANIA R.R.

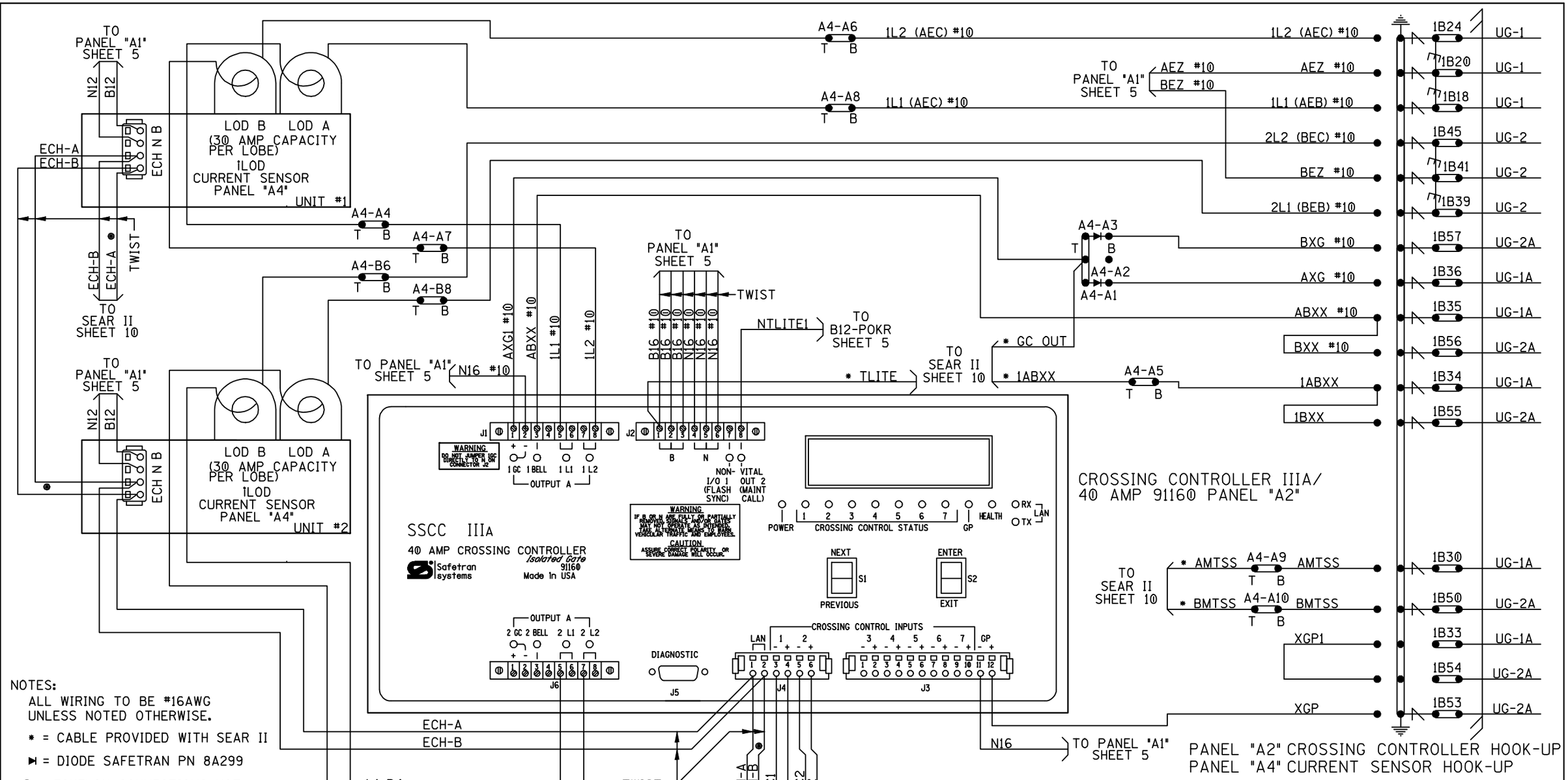

NOTES:

ALL WIRING TO BE #16AWG UNLESS NOTED OTHERWISE.

* = CABLE PROVIDED WITH SEAR II

▶| = DIODE SAFETRAN PN 8A299

● = ECHELON CONNECTIONS NOT TO EXCEED 53' IN LENGTH AND TOTAL LENGTH NOT TO EXCEED 430' WITH A MAXIMUM OF 8 NODES, RECOMMEND USE BELDEN WIRE CABLE #8461 OR EQUIVALENT.

DESIGNED BY: BWL 07-16-07	NORFOLK SOUTHERN		
DRAWN BY: SSC 07-16-07	OFFICE OF ASS'T. VICE PRESIDENT COMM. & SIGNAL, ATLANTA, GA.	M.P.:	UW0.65
CHECKED BY: CEL 08-08-07	WOOD TO CP 518 CFLGS AT MORGAN STREET		
IN SERVICE: - -	C.R. & I.I.T.	FILE No.	R-2380
	CADD or DWG. No. 32970006.12	SHEET No.	12 of 23

REVISION INITIALS

PROPERTY
PENNSYLVANIA R.R.

PROGRAM	
FLASHER RATE	40
1 GC DELAY	4 SEC.
2 GC DELAY	0 SEC.
BELL-ON GATE RISING	OFF
MIN ACTIVATION TIME	0 SEC.
ENABLE INPUTS	1 THRU 1
TIME	
DATE	
DAYLIGHT SAVINGS	ON
PASSWORD	DISABLED
SET TO DEFAULT	SKIP

SETUP LAMP VOLTAGE
SETUP OUTPUT 1L1 XX.X VOLTS
SETUP OUTPUT 1L2 XX.X VOLTS
SETUP OUTPUT 2L1 XX.X VOLTS
SETUP OUTPUT 2L2 XX.X VOLTS

CONFIGURE	
LOS TIMERS	1: 0 SEC.
	2: 0 SEC.
	3: 0 SEC.
	4: 0 SEC.
	5: 0 SEC.
	6: 0 SEC.
	7: 0 SEC.
ATCS ADDRESS	7RRRLLLGGG07
LOW BATTERY	DISABLED
AUX I/O	NV OUTPUT

TEST CONFIGURE	
LAMP TEST CANCEL TIMER	5 MIN.
LAMP TEST DELAY TIMER	30 SEC.
LAMP TEST ON TIMER	15 SEC.

PANEL "A2" CROSSING CONTROL
SET-UP CHART

DESIGNED BY: BWL 07-16-07	NORFOLK SOUTHERN		
DRAWN BY: SSC 07-16-07	OFFICE OF ASS'T. VICE PRESIDENT COMM. & SIGNAL, ATLANTA, GA.	M.P.:	UW0.65
CHECKED BY: CEL 08-08-07	WOOD TO CP 518 CFLGS AT MORGAN STREET		
IN SERVICE: - -	C.R. & I.I.T.	FILE No.	R-2380
PROPERTY PENNSYLVANIA R.R.	CADD or DWG. No. 32970006.13	SHEET No.	13 of 23

REVISION INITIALS

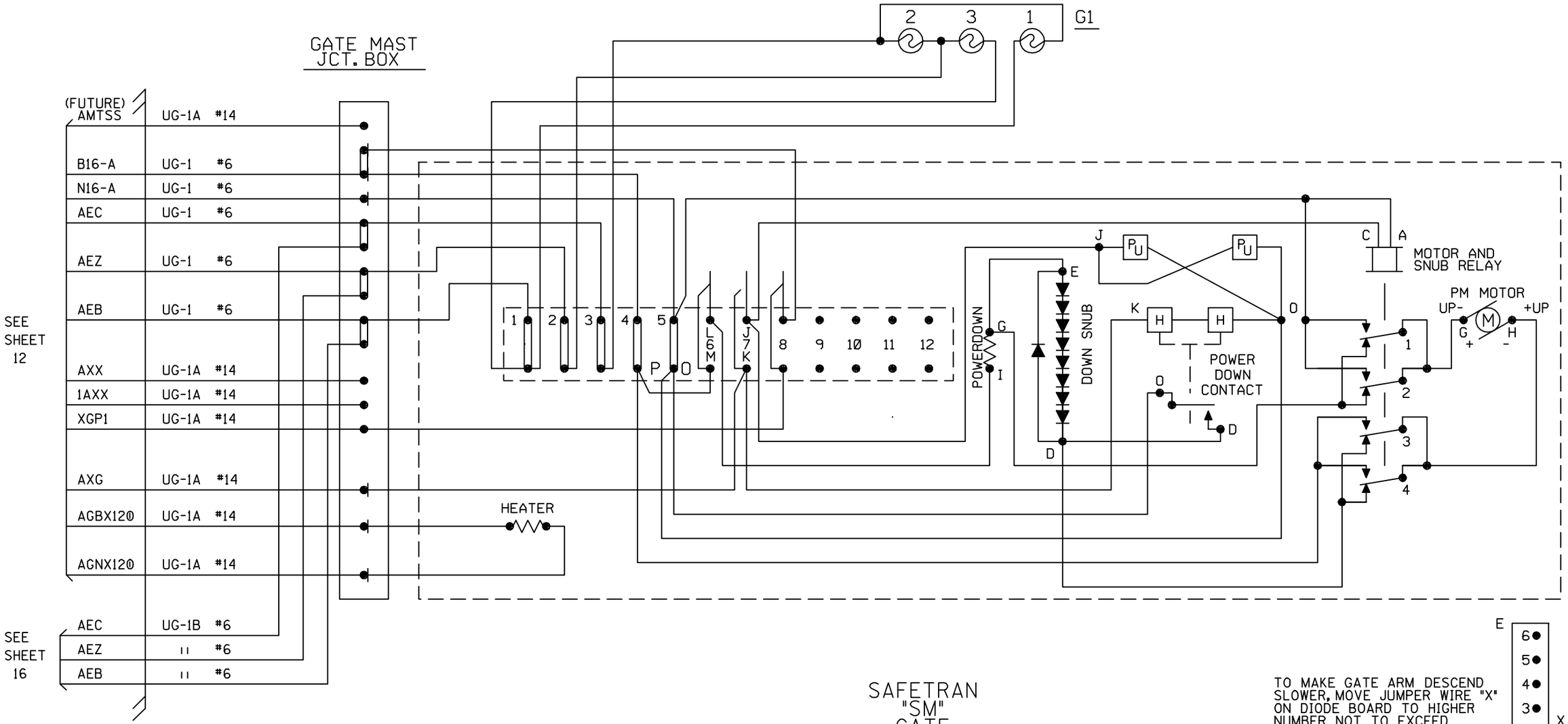

SAFETRAN "SM" GATE

GATE MECHANISM IS EXISTING FIELD VERIFY ALL WIRING.

TO MAKE GATE ARM DESCEND SLOWER, MOVE JUMPER WIRE "X" ON DIODE BOARD TO HIGHER NUMBER NOT TO EXCEED POSITION #4.

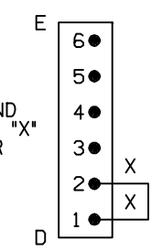

GATE 1 MECHANISM

CIRCUIT CONTROLLER DATA			
CONTACT	CONTACT CLOSED	CAM DRIVES CONTACT	CONTACT FUNCTION
6	45° TO 90°	CLOSED	TO OPEN MOTOR DOWN CIRCUIT
7	0° TO 89°	CLOSED	TO CUT OFF MOTOR AFTER GATE HAS CLEARED
8	93° TO 5°	CLOSED	CONTROL BELL
9	86° TO 93°	CLOSED	CONTROL XGNR RELAY

DESIGNED BY: BWL 07-16-07	NORFOLK SOUTHERN		
DRAWN BY: SSC 07-16-07	OFFICE OF ASS'T. VICE PRESIDENT COMM. & SIGNAL, ATLANTA, GA.	M.P.:	UW0.65
CHECKED BY: CEL 08-08-07	WOOD TO CP 518 CFLGS AT MORGAN STREET		
IN SERVICE: - -	C.R. & I.I.T.	FILE No.	R-2380
	CADD or DWG. No. 32970006.14	SHEET No.	14 of 23

REVISION INITIALS

PROPERTY PENNSYLVANIA R.R.

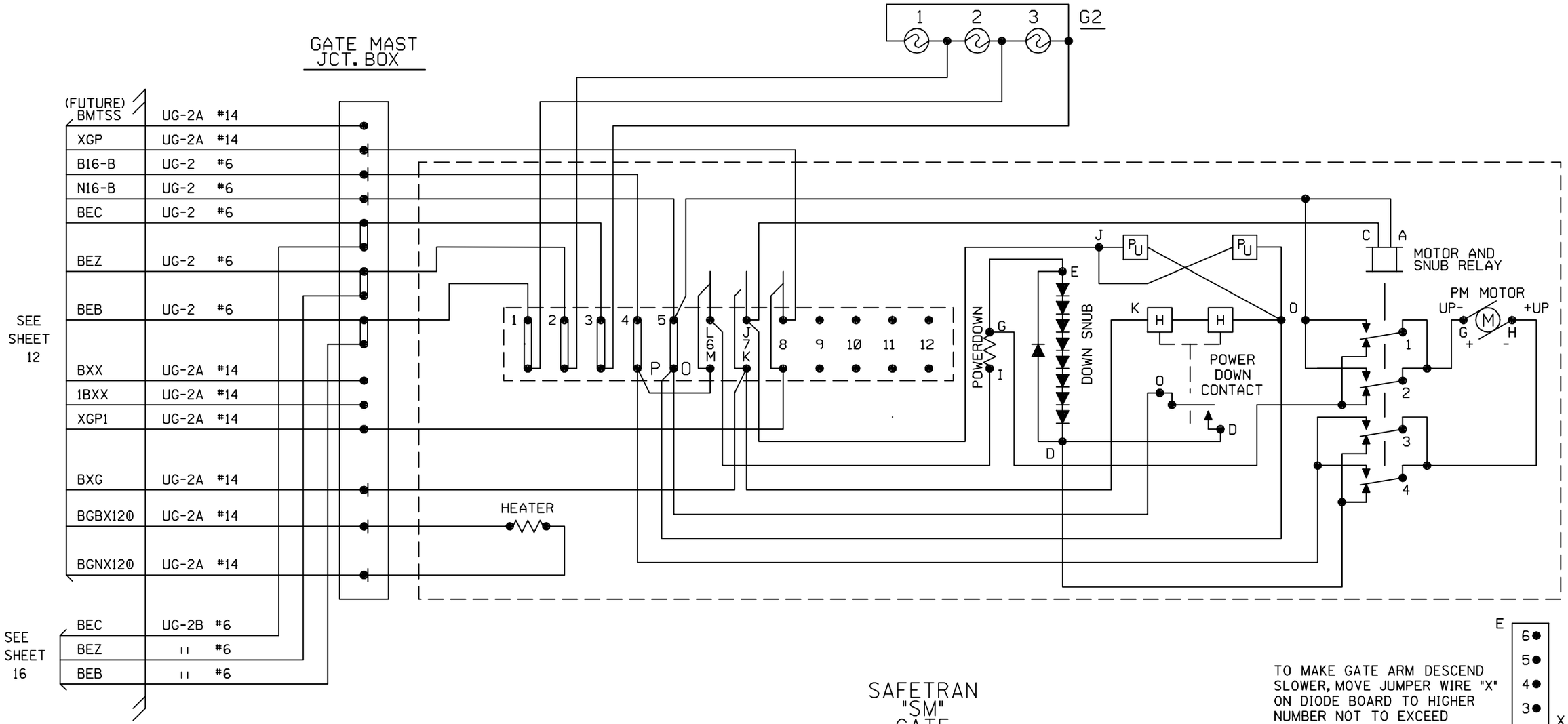

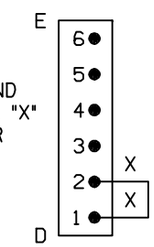

TO MAKE GATE ARM DESCEND SLOWER, MOVE JUMPER WIRE "X" ON DIODE BOARD TO HIGHER NUMBER NOT TO EXCEED POSITION #4.

SAFETRAN "SM" GATE

GATE MECHANISM IS EXISTING FIELD VERIFY ALL WIRING.

GATE 2 MECHANISM

CIRCUIT CONTROLLER DATA			
CONTACT	CONTACT CLOSED	CAM DRIVES CONTACT	CONTACT FUNCTION
6	45° TO 90°	CLOSED	TO OPEN MOTOR DOWN CIRCUIT
7	0° TO 89°	CLOSED	TO CUT OFF MOTOR AFTER GATE HAS CLEARED
8	93° TO 5°	CLOSED	CONTROL BELL
9	86° TO 93°	CLOSED	CONTROL XGNR RELAY

DESIGNED BY: BWL 07-16-07	NORFOLK SOUTHERN		
DRAWN BY: SSC 07-16-07	OFFICE OF ASS'T. VICE PRESIDENT COMM. & SIGNAL, ATLANTA, GA.	M.P.:	UW0.65
CHECKED BY: CEL 08-08-07	WOOD TO CP 518 CFLGS AT MORGAN STREET		
IN SERVICE: - -	C.R. & I.I.T.	FILE No.	R-2380
	CADD or DWG. No. 32970006.15	SHEET No.	15 of 23

REVISION INITIALS

PROPERTY PENNSYLVANIA R.R.

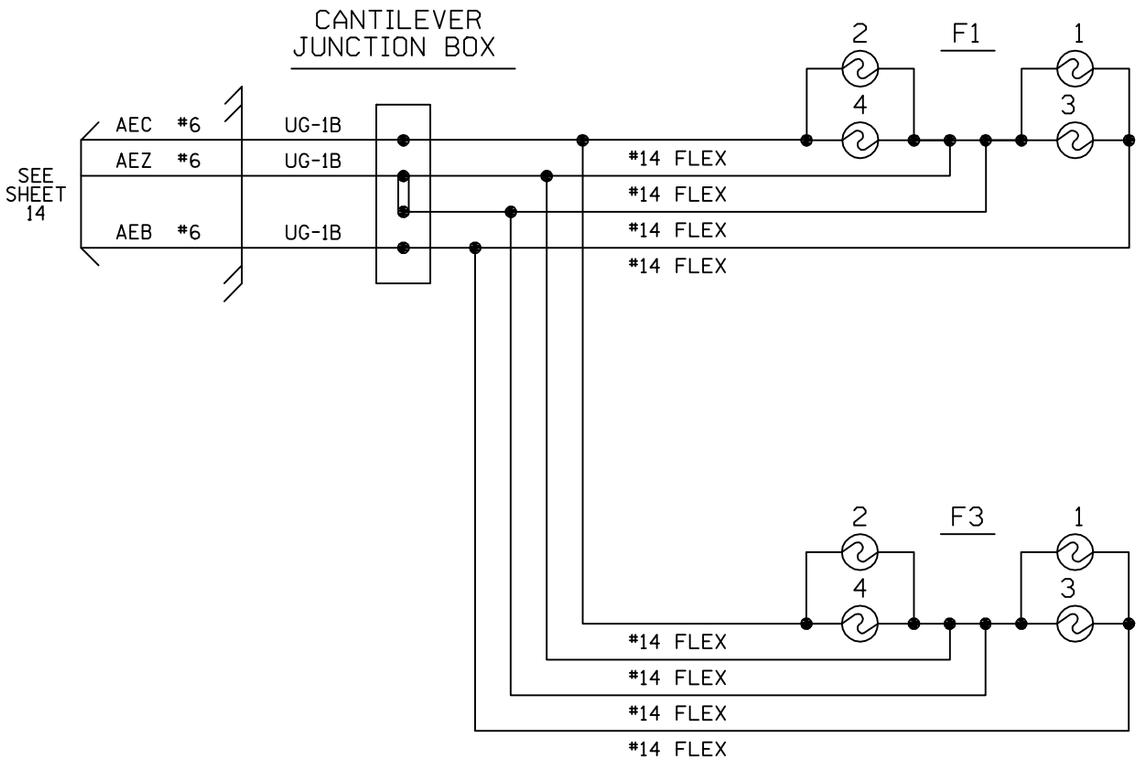

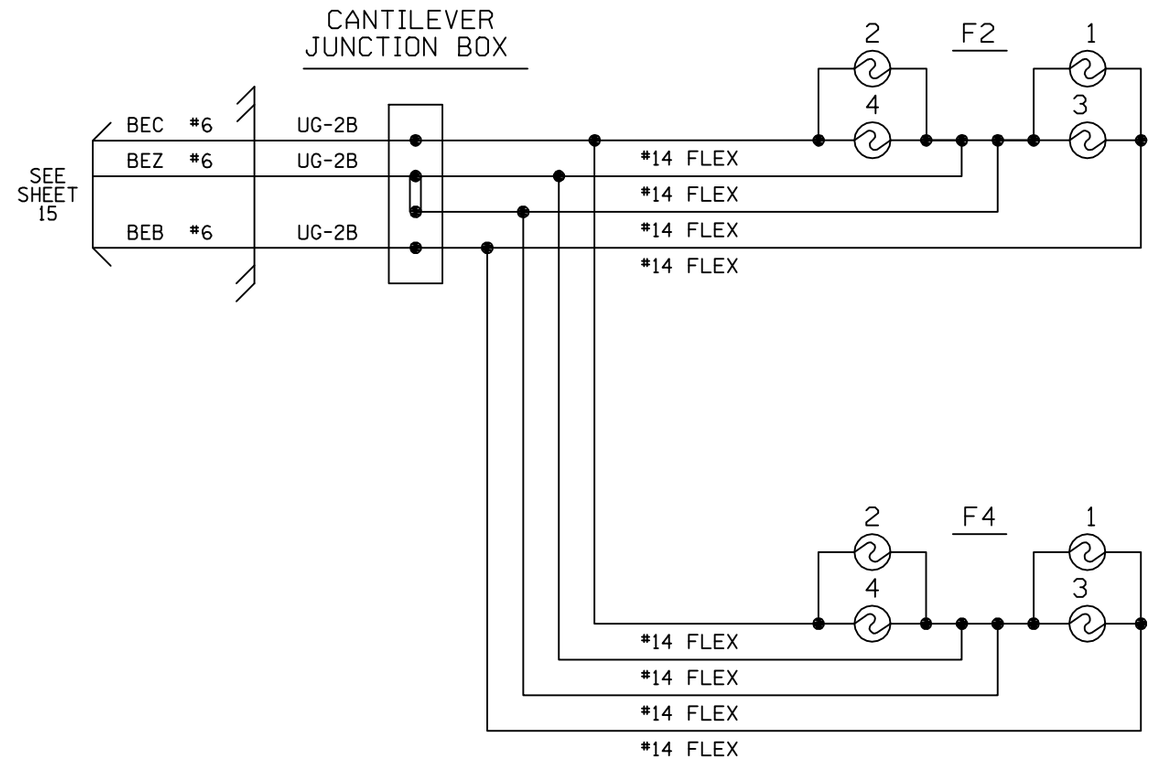

FLASHER LIGHTS ARE EXISTING
FIELD VERIFY ALL WIRING.

FLASHER LIGHTS

DESIGNED BY: BWL 07-16-07	NORFOLK SOUTHERN		
DRAWN BY: SSC 07-16-07	OFFICE OF ASS'T. VICE PRESIDENT COMM. & SIGNAL, ATLANTA, GA.	M.P.:	UW0.65
CHECKED BY: CEL 08-08-07	WOOD TO CP 518 CFLGS AT MORGAN STREET		
IN SERVICE: - -	C.R. & I.I.T.	FILE No.	R-2380
	CADD or DWG. No. 32970006.16	SHEET No.	16 of 23

REVISION INITIALS											

PROPERTY
PENNSYLVANIA R.R.

LEFT TWO ROWS TERMINAL BOARD 1

"1A" "1B"

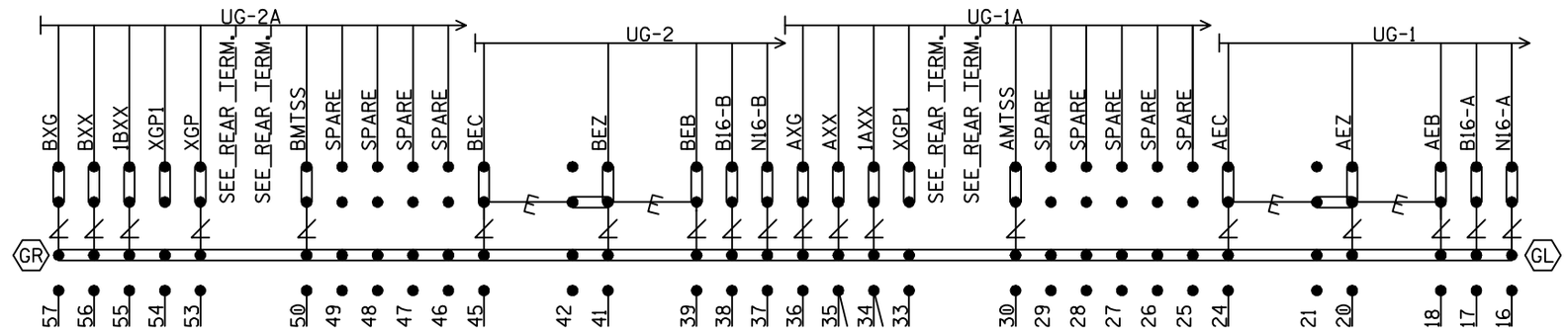

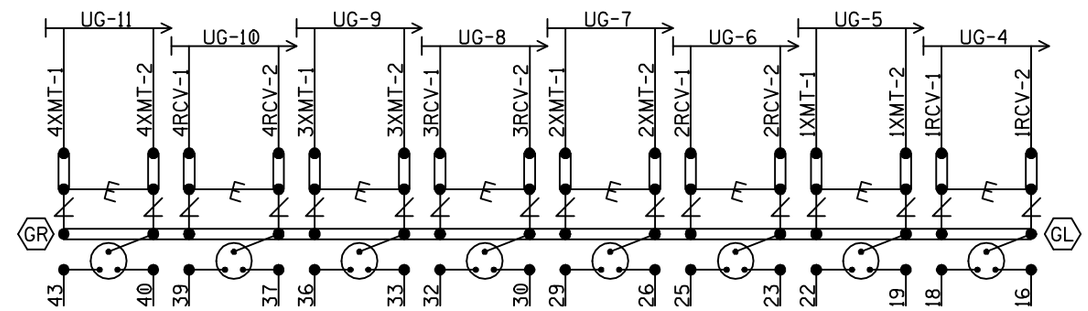

NOTE: INSTALL TEST LINKS ON ALL TRACK WIRES AND ON ALL LOW VOLTAGE UNDERGROUND CABLE TERMINATIONS.

= Heavy Duty Equalizer (022700-1X)

= Clearview Lightning Arrester (022585-1X)

= LPC-10560-51

SEE FARADAY SHIELD DETAILS - 1A & 1B FOR HOW THIS PORTION OF THE FARADAY SHIELD IS PREDRILLED. ONLY INSTALL AND USE THE TERMINALS NEEDED.

GR / GL = TERMINALS GROUNDED TO SHIELD. 4 POST BLOCKS USE EITHER - GR - SERMMI PART NO. 61278 GL - SERMMI PART NO. 61278-1.

BACKBOARD DETAIL - 1A & 1B

DESIGNED BY: BWL 07-16-07	NORFOLK SOUTHERN		
DRAWN BY: SSC 07-16-07	OFFICE OF ASS'T. VICE PRESIDENT COMM. & SIGNAL, ATLANTA, GA.	M.P.:	UW0.65
CHECKED BY: CEL 08-08-07	WOOD TO CP 518 CFLGS AT MORGAN STREET		
IN SERVICE: - -	C.R. & I.I.T.	FILE No.	R-2380
	CADD or DWG. No. 32970006.17	SHEET No.	17 of 23

REVISION INITIALS

PROPERTY PENNSYLVANIA R.R.

REAR VIEW OF LEFT TWO ROWS TERMINAL BOARD 1
"1B" "1A"

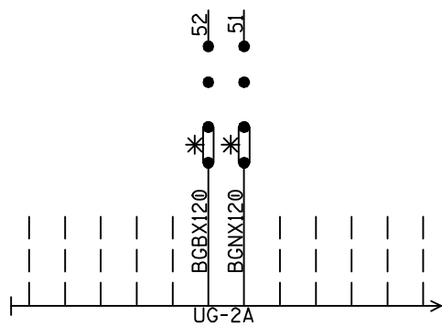

(SEE PREVIOUS SHEET FOR OTHER WIRES IN CABLE)

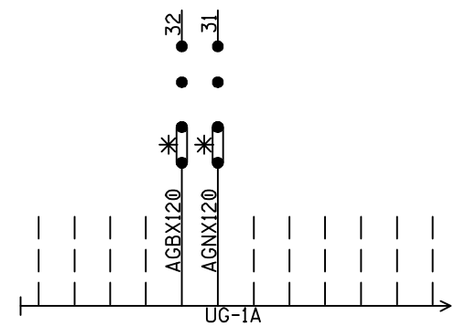

(SEE PREVIOUS SHEET FOR OTHER WIRES IN CABLE)

NOTE: ALL 120VAC AND ABOVE WILL BE WIRED TO THE REAR OF FARADAY BACKBOARD. INSULATED NUTS MUST BE USED ON ALL TERMINALS.

✳ = CLOSED DURING WINTER MONTHS

REAR OF FARADAY BACKBOARD
REAR BACKBOARD DETAIL - 1A & 1B

DESIGNED BY: BWL 07-16-07	NORFOLK SOUTHERN		
DRAWN BY: SSC 07-16-07	OFFICE OF ASS'T. VICE PRESIDENT COMM. & SIGNAL, ATLANTA, GA.	M.P.:	UW0.65
CHECKED BY: CEL 08-08-07	WOOD TO CP 518 CFLGS AT MORGAN STREET		
IN SERVICE: - -	C.R. & I.I.T.	FILE No.	R-2380
	CADD or DWG. No. 32970006.18	SHEET No.	18 of 23

REVISION INITIALS											PROPERTY PENNSYLVANIA R.R.

NOTE: IF THE FARADAY SHIELD WOULD EVER NEED TO BE DRILLED IN THE FIELD, PROPER PRECAUTIONS MUST BE TAKEN TO INSURE METAL SHAVINGS DO NOT GET INTO EXISTING TERMINALS/WIRES.

AREA BELOW IS SCALED WITH AS=.75

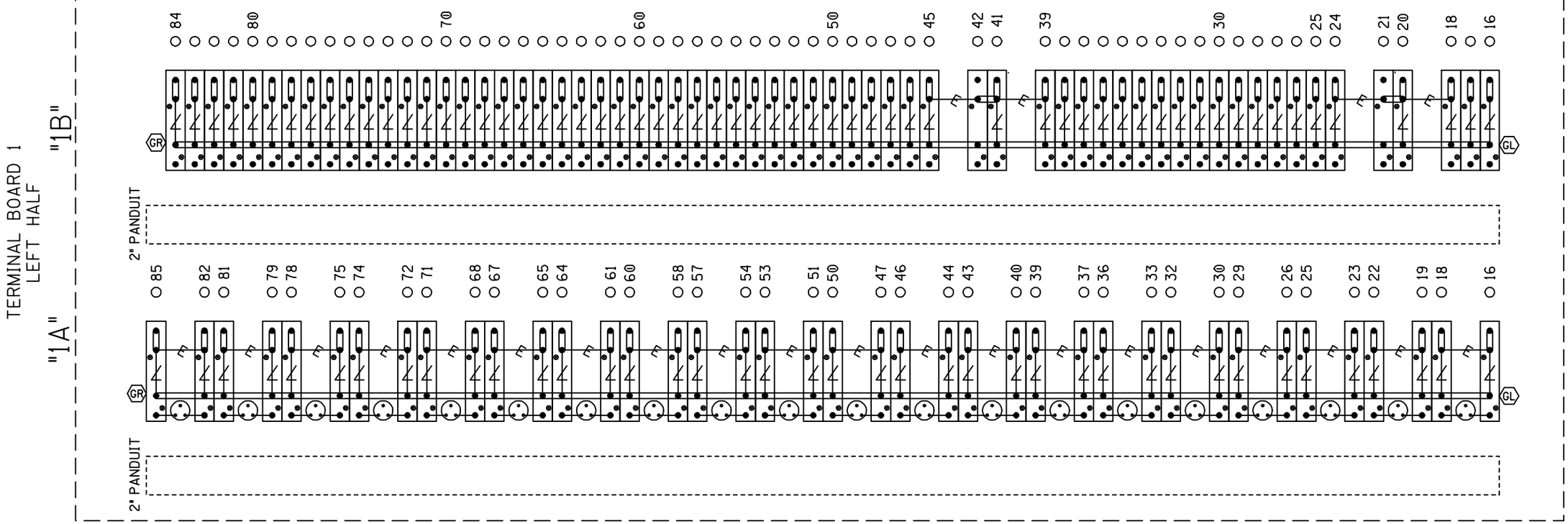

= Heavy Duty Equalizer (022700-1X)

Clearview = Lightning Arrester (022585-1X)

= LPC-10560-51

TERMINAL BOARD 1
LEFT TWO ROWS

FARADAY SHIELD DETAIL - 1A & 1B

= INDICATES PLACEMENT OF PANDUIT

THIS SHEET IS FOR REFERENCE ONLY, TO REFLECT HOW THE FARADAY SHIELD IS PREDRILLED. ONLY INSTALL AND USE THE TERMINALS NEEDED.

GR / GL = TERMINALS GROUNDED TO SHIELD. 4 POST BLOCKS USE EITHER -
GR - SERMMI PART NO. 61278
GL - SERMMI PART NO. 61278-1.

DESIGNED BY: BWL 07-16-07	NORFOLK SOUTHERN		
DRAWN BY: SSC 07-16-07	OFFICE OF ASS'T. VICE PRESIDENT COMM. & SIGNAL, ATLANTA, GA.	M.P.:	UW0.65
CHECKED BY: CEL 08-08-07	WOOD TO CP 518 CFLGS AT MORGAN STREET		
IN SERVICE: - -	C.R. & I.I.T.	FILE No.	R-2380
	CADD or DWG. No. 32970006.19	SHEET No.	19 of 23

REVISION INITIALS

PROPERTY
PENNSYLVANIA R.R.

NOTE: IF THE FARADAY SHIELD WOULD EVER NEED TO BE DRILLED IN THE FIELD, PROPER PRECAUTIONS MUST BE TAKEN TO INSURE METAL SHAVINGS DO NOT GET INTO EXISTING TERMINALS/WIRES.

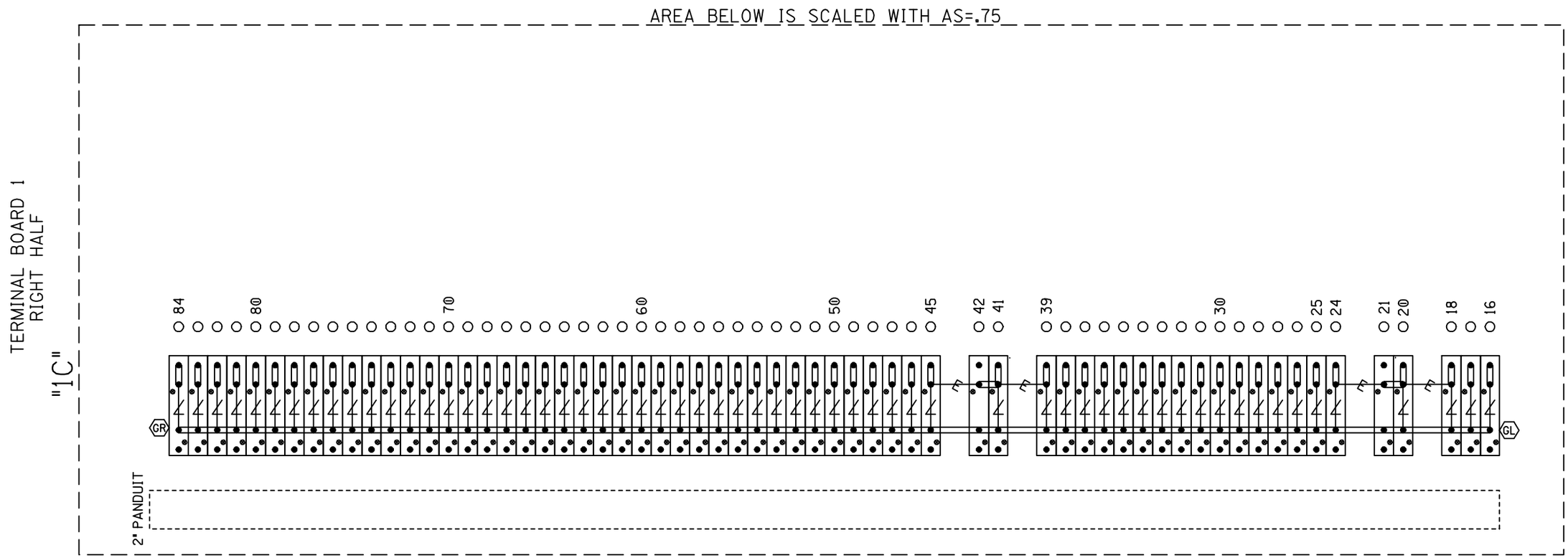

= Heavy Duty Equalizer (022700-1X)

= Clearview Lightning Arrester (022585-1X)

= LPC-10560-51

TERMINAL BOARD 1
RIGHT ROW
FARADAY SHIELD DETAIL - 1C

= INDICATES PLACEMENT OF PANDUIT

THIS SHEET IS FOR REFERENCE ONLY, TO REFLECT HOW THE FARADAY SHIELD IS PREDRILLED. ONLY INSTALL AND USE THE TERMINALS NEEDED.

GR / GL = TERMINALS GROUNDED TO SHIELD. 4 POST BLOCKS USE EITHER - GR - SERMMI PART NO. 61278 GL - SERMMI PART NO. 61278-1.

DESIGNED BY: BWL 07-16-07	NORFOLK SOUTHERN		
DRAWN BY: SSC 07-16-07	OFFICE OF ASS'T. VICE PRESIDENT COMM. & SIGNAL, ATLANTA, GA.	M.P.:	UW0.65
CHECKED BY: CEL 08-08-07	WOOD TO CP 518 CFLGS AT MORGAN STREET		
IN SERVICE: - -	C.R. & I.I.T.	FILE No.	R-2380
	CADD or DWG. No. 32970006.20	SHEET No.	20 of 23

REVISION INITIALS

PROPERTY
PENNSYLVANIA R.R.

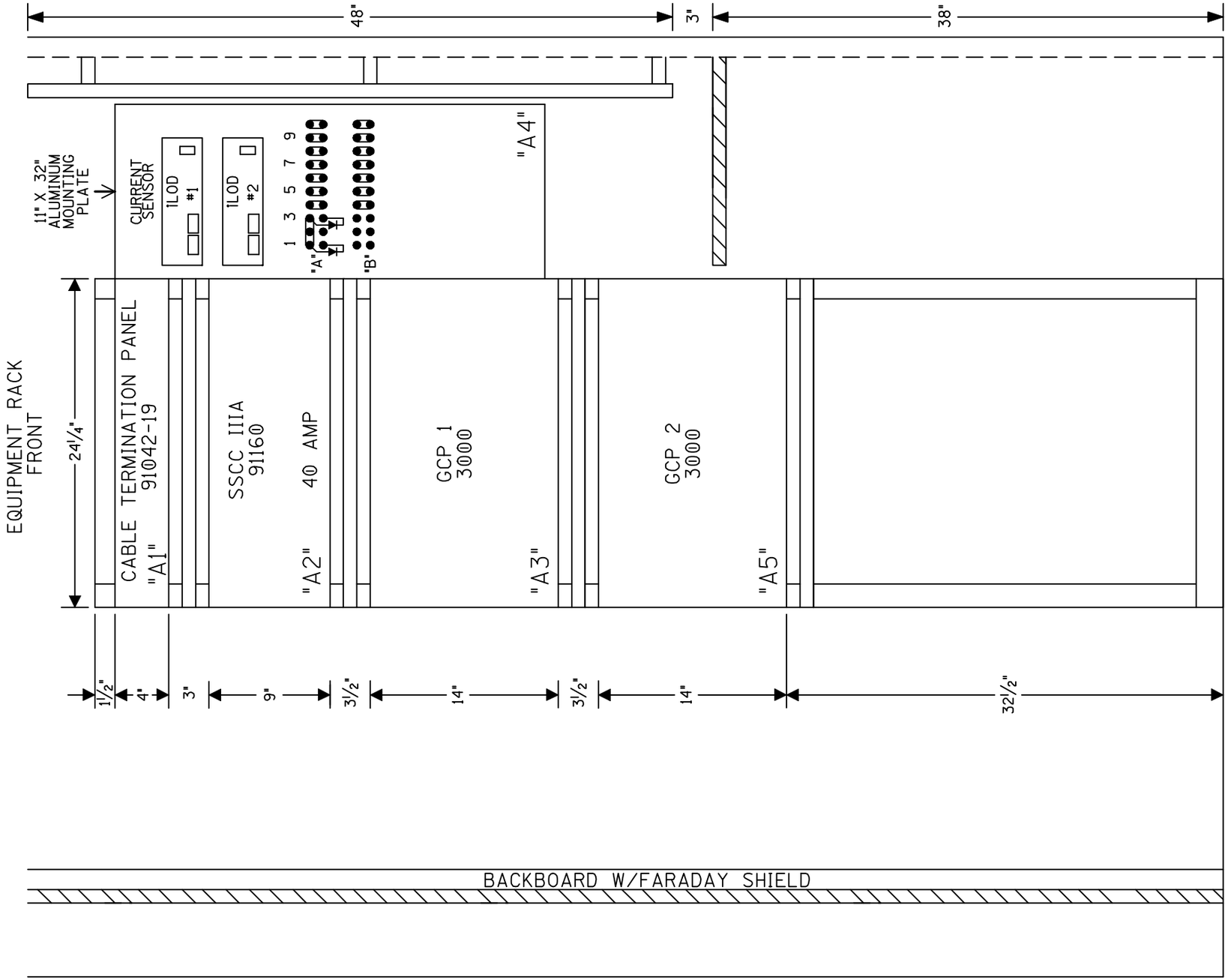

SIDE "C"

RACK PLACEMENT
6' X 6' HOUSE - SIDE "C"

DESIGNED BY: BWL 07-16-07	NORFOLK SOUTHERN		
DRAWN BY: SSC 07-16-07	OFFICE OF ASS'T. VICE PRESIDENT COMM. & SIGNAL, ATLANTA, GA.	M.P.:	UW0.65
CHECKED BY: CEL 08-08-07	WOOD TO CP 518 CFLGS AT MORGAN STREET		
IN SERVICE: - -	C.R. I.I.T.	FILE No.	R-2380
	CADD or DWG. No. 32970006.21	SHEET No.	21 of 23

REVISION INITIALS											PROPERTY PENNSYLVANIA R.R.

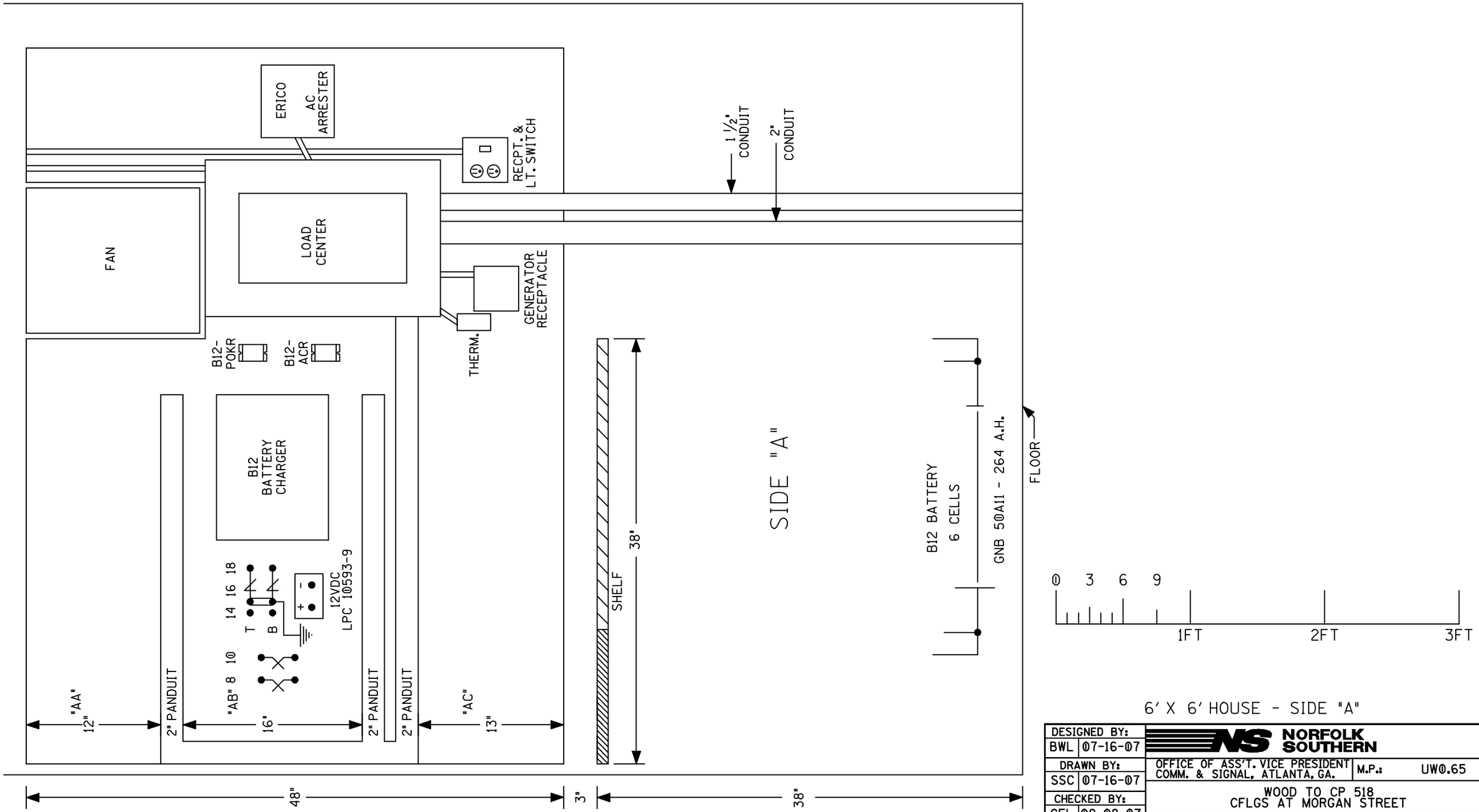

6' X 6' HOUSE - SIDE "A"

DESIGNED BY: BWL 07-16-07	NORFOLK SOUTHERN		
DRAWN BY: SSC 07-16-07	OFFICE OF ASS'T. VICE PRESIDENT COMM. & SIGNAL, ATLANTA, GA.	M.P.:	UW0.65
CHECKED BY: CEL 08-08-07	WOOD TO CP 518 CFLGS AT MORGAN STREET		
IN SERVICE: - -	C.R. & I.I.T.	FILE No.	R-2380
	CADD or DWG. No. 32970006.22	SHEET No.	22 of 23

REVISION INITIALS															

PROPERTY
PENNSYLVANIA R.R.

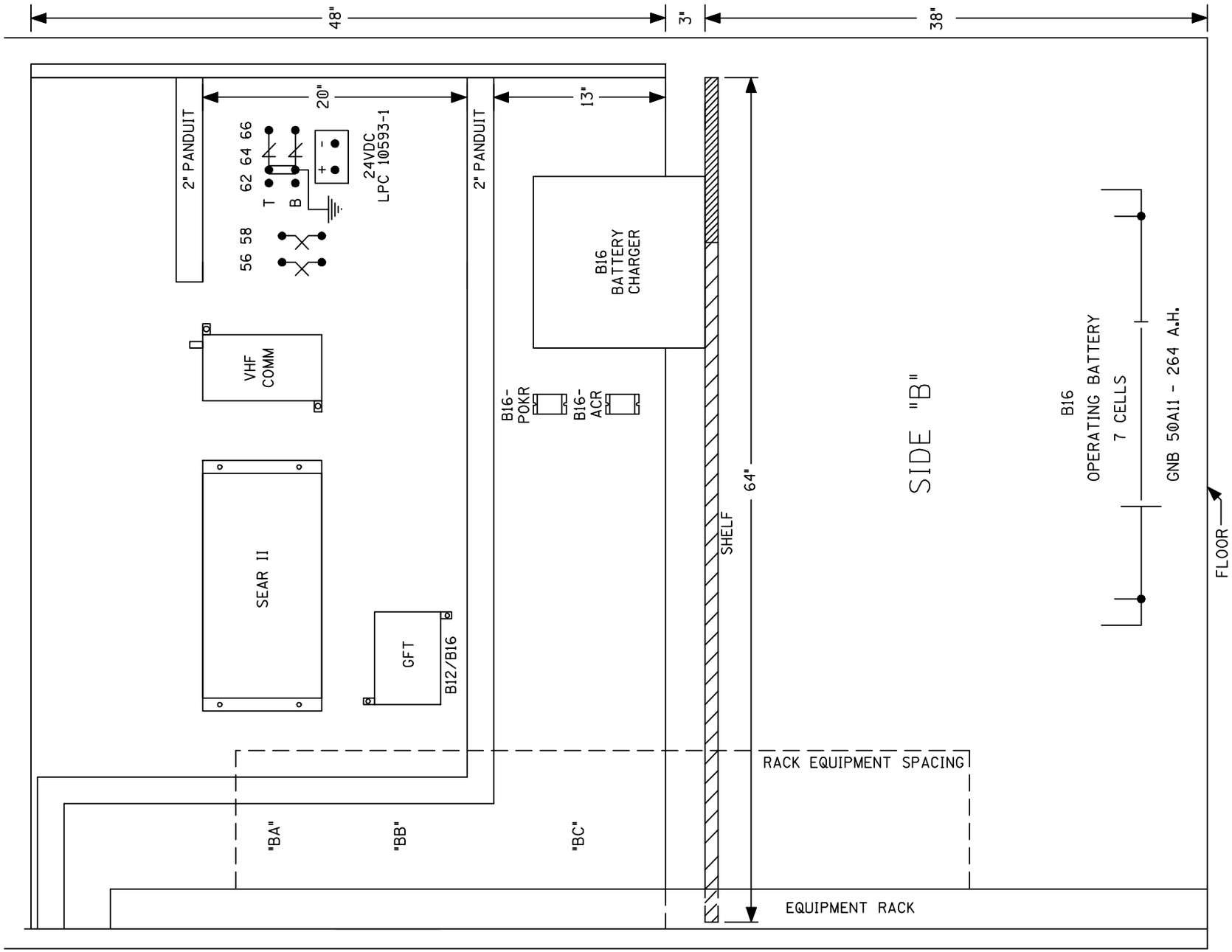

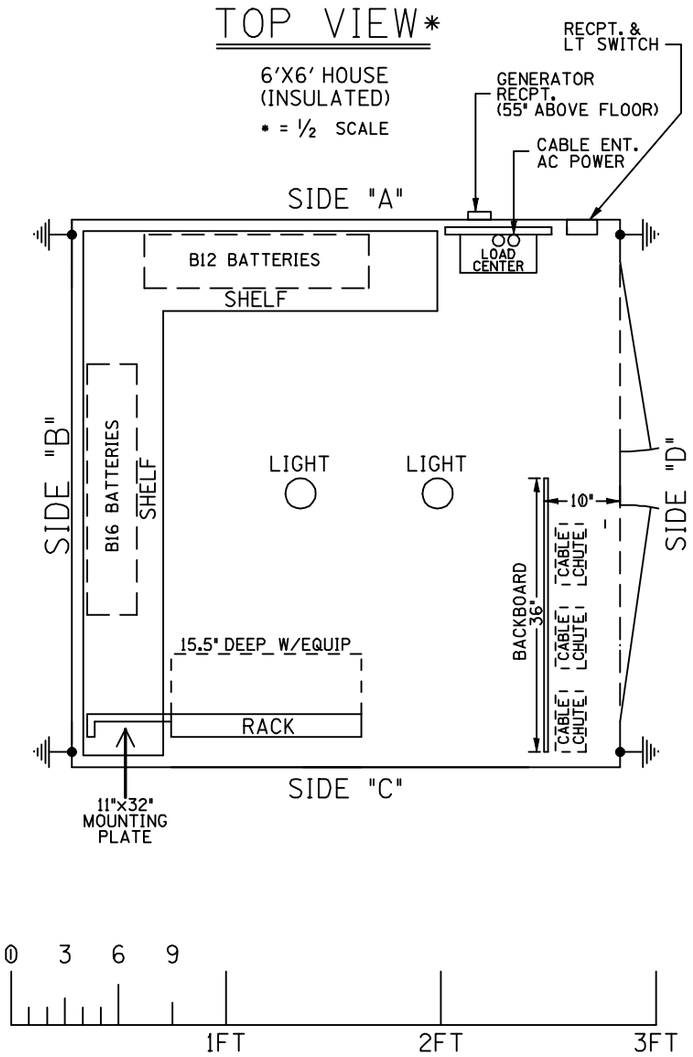

6' X 6' HOUSE (SIDE "B" & TOP VIEW)

DESIGNED BY: BWL 07-16-07	NORFOLK SOUTHERN		
DRAWN BY: SSC 07-16-07	OFFICE OF ASS'T. VICE PRESIDENT COMM. & SIGNAL, ATLANTA, GA.	M.P.:	UW0.65
CHECKED BY: CEL 08-08-07	WOOD TO CP 518 CFLGS AT MORGAN STREET		
IN SERVICE: - -	C.R. & I.I.T.	FILE No.	R-2380
	CADD or DWG. No. 32970006.23	SHEET No.	23 of 23

REVISION INITIALS													

PROPERTY
PENNSYLVANIA R.R.