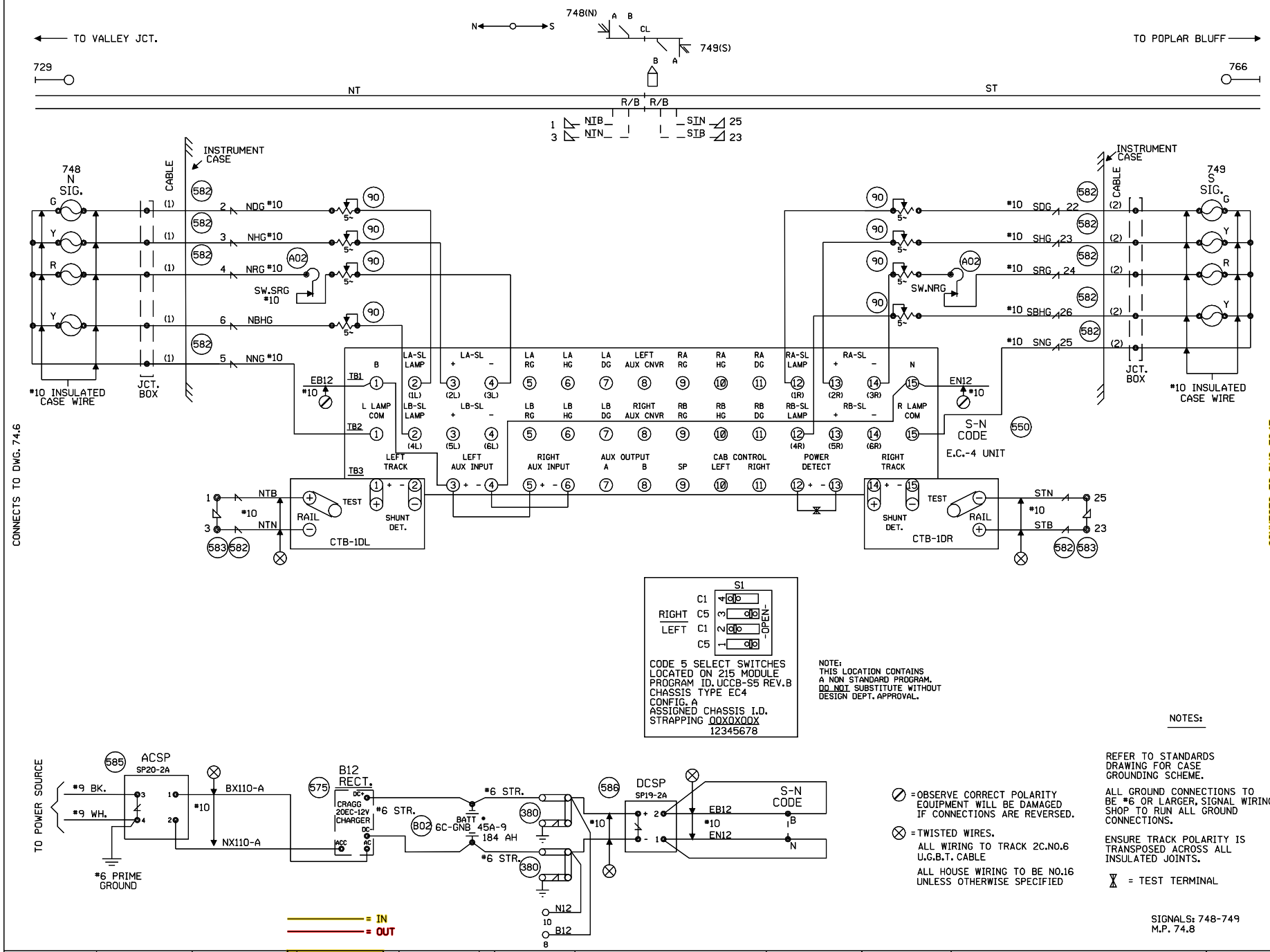

3 11-01-06 INSTALL FLASHERS, W/GATES & CWT TR 18 M.P. 76.15 AFE #58749 JTB / /SSD/RDD	2 REV. 3-6-00 INSTALLED NEW SIDING AT M.P. 71.69 1-10-00 RLL TT/WITT/JM	1 REV. 5-31-96 IN-SERVICE 3-12-96 RCB RAC/WITT/CGB	MODIFICATION LEVEL: Q.A. LAST LEVEL CHK'D. AR; LAST LEVEL MOD. THIS TYP. AR; LAST LEVEL BY DESIGNER. 00; CHANGED FROM TYP.? Y/N YES

UNION PACIFIC — QUALITY PRODUCTIVITY SAFETY — SIGNAL DESIGN

DES: CGB
DIG: CGB
CHK: RCB
A.F.E. 16574
ID= 127507480.1.2

UNION PACIFIC RAILROAD
VALLEY JCT., ILL.
TO POPLAR BLUFF, MO.
C.T.C. CIRCUITS
Office of AVP Engineering - Design — Omaha, Nebraska

DATE 12-21-94
SHEET 1 OF 2
DWG 74.8
S-1275-M

(REV. 12-15-93) (1TE4INTRC.1)

		7-1-98 JM	REV. 5-31-96 INSTALL ELECTRO CODE. MENARD JCT. TO RADDLE JCT. WO#16574 3-19-96 RCB JEH/WITT/CGB	REV. 9-21-94 SIGNAL ASPECTS CHANGE ROCKWOOD JCT. TO GORHAM HAR	MADE RADDLE JCT. RIGHT HAND T.O. WITT 1-25-91 GRF	ST LOUIS 3-25-85 DRAWN BY B.E.C. CHECKED A F E	UNION PACIFIC R.R. S-1275-M DW. 748-49 SH2 PLACED IN SERVICE ___ BY ___

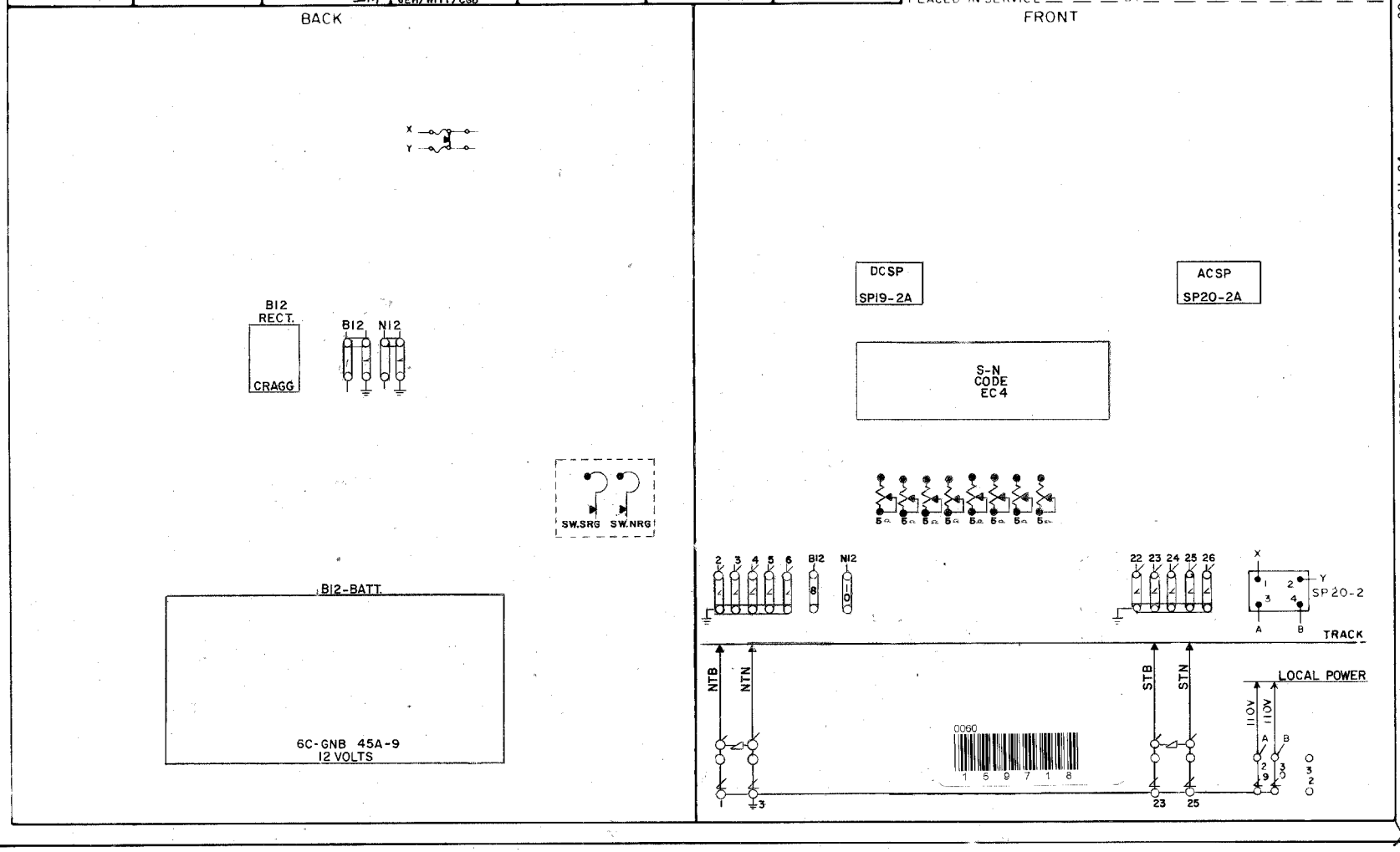

SUPERSEDES DW. 748-49 DATED 12-11-84

28

SIGNALS 748-749
M.P. 74.80

= IN
= OUT

							1 11-01-06 INSTALL FLASHERS, W/GATES & CWT TR 18 M.P. 76.15 AFE #58749 GRK / /SSD/RDD	UNION PACIFIC QUALITY PRODUCTIVITY SAFETY SIGNAL DESIGN	DES: DIG: SSD CHK: GRK A.F.E. ID= 127507480.2S	UNION PACIFIC RAILROAD VALLEY JCT., ILLINOIS TO POPLAR BLUFF, MISSOURI C.T.C. CIRCUITS Office of AVP Engineering - Design Omaha, Nebraska	DATE 11-01-06 SHEET 2 DWG 74.80 S-1275

TIF FILE ATTACHED TIF ID = 127507480 .2.TIF

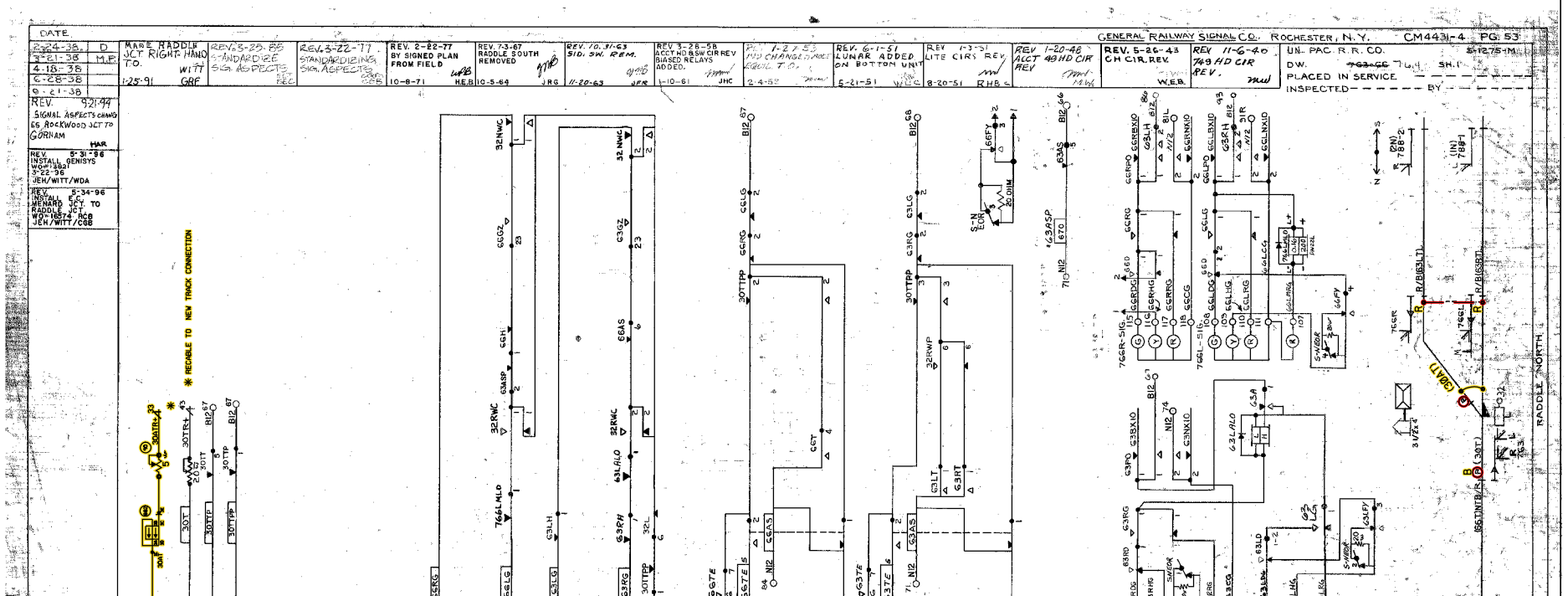

RADDLE JCT.
NORTH END
CHESTER SUBDIVISION
M.P. 76.40
6'X6' HOUSE

= IN
= OUT

1 11-01-06 INSTALL FLASHERS, W/GATES & CWT TR 18 M.P. 76.15 AFE #58749 GRK / /SSD/JJF	UNION PACIFIC QUALITY PRODUCTIVITY SAFETY SIGNAL DESIGN	DES: DIG: SSD CHK: GRK A.F.E. ID= 127507640.1S	UNION PACIFIC RAILROAD VALLEY JCT., ILL. TO POPLAR BLUFF, MO. C.T.C. CIRCUITS Office of AVP Engineering - Design Omaha, Nebraska	DATE 11-01-06 SHEET 1 DWG 76.40 S-1275		

TIF FILE ATTACHED TIF ID = 127507640 .1.TIF

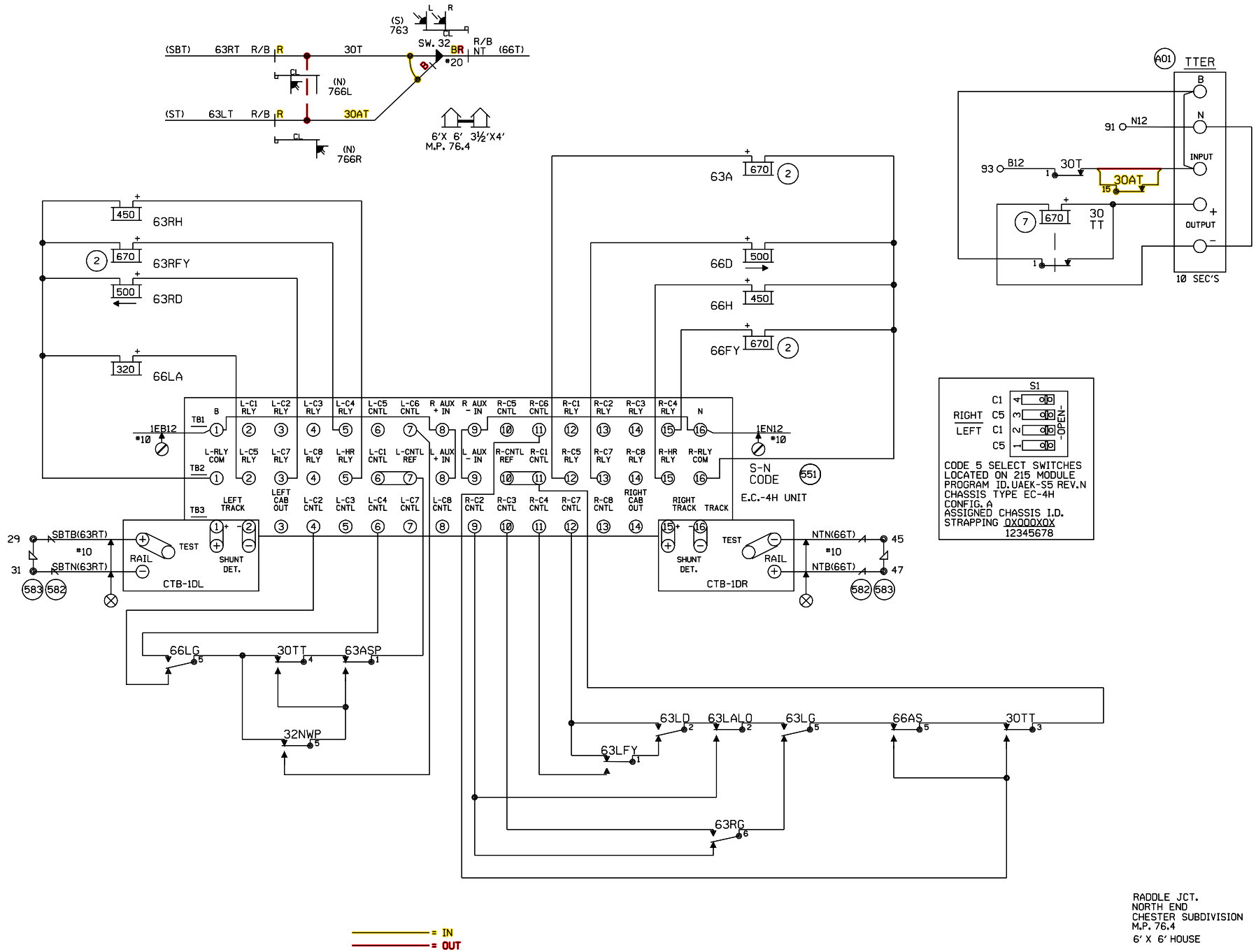

RADDLE JCT.
NORTH END
CHESTER SUBDIVISION
M.P. 76.4
6' X 6' HOUSE

2 11-01-06 INSTALL FLASHERS. W/GATES & CWT TR 18 M.P. 76.15 AFE #58749 GRK / /SSD/JJF	REV. 5-31-96 IN-SERVICE 3-22-96 RCB RAC/WITT/CGB	MODIFICATION LEVEL: Q.A. LAST LEVEL CHK'D. AH; LAST LEVEL MOD. THIS TYP. AH; LAST LEVEL BY DESIGNER. AR; CHANGED FROM TYP.? Y/N YES	UNION PACIFIC SIGNAL DESIGN

DES: CGB
DIG: CGB
CHK: RCB
A.F.E. 16574
ID= 127507640.2

UNION PACIFIC RAILROAD
VALLEY JCT., ILL. TO
POPLAR BLUFF, MO.
C.T.C. CIRCUITS
OFFICE OF CHIEF ENG'R SIGNALS OMAHA NEBR.

DATE 12-21-94
SHEET 2
DWG 76.4
S-1275-M

(REV. 2-25-91) (RHE4CGN.3)

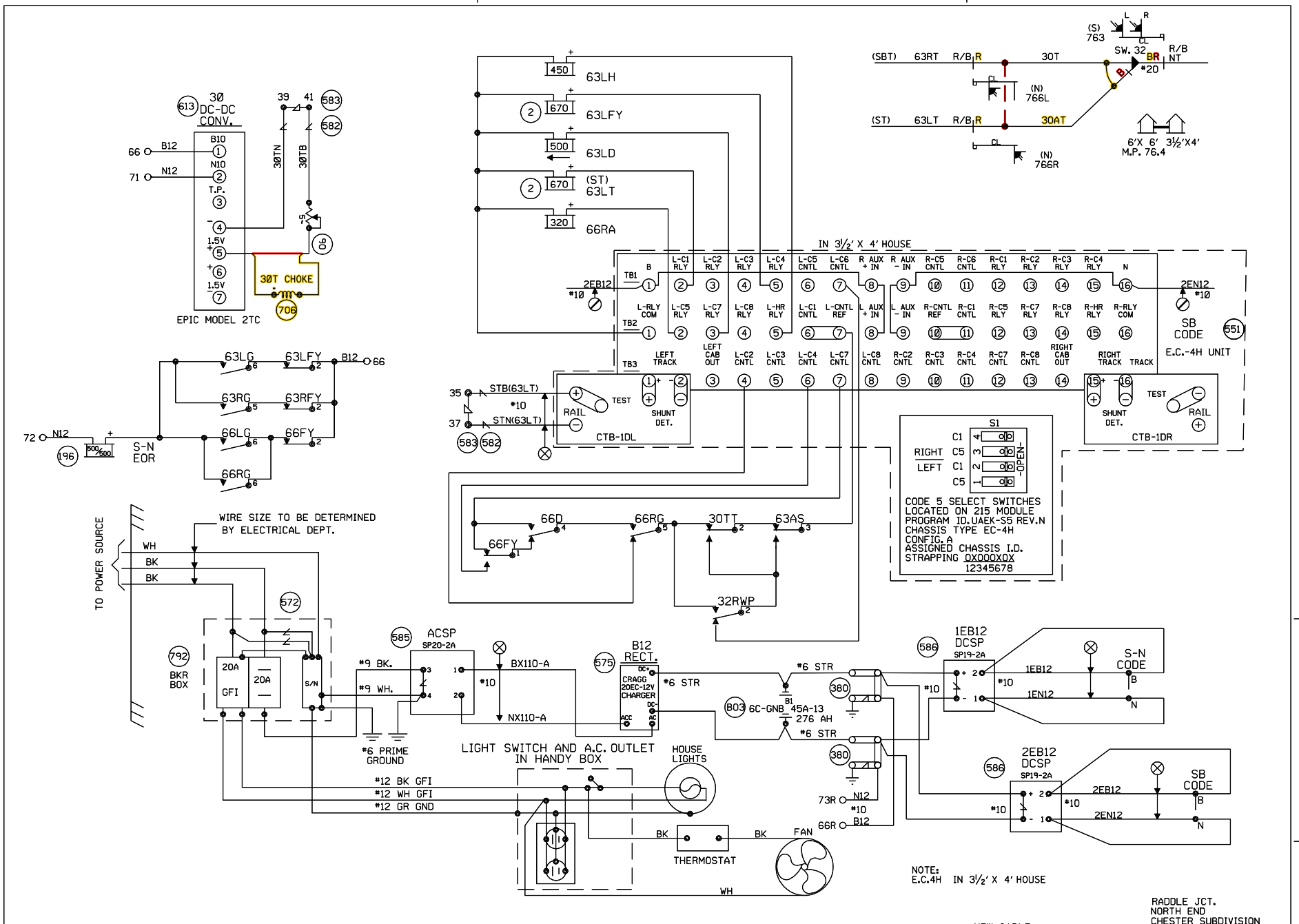

2 11-01-06 INSTALL FLASHERS, W/GATES & CWT TR 18 M.P. 76.15 AFE #58749 GRK / /SSD/JJF	REV. 5-31-96 IN-SERVICE 3-22-96 RCB RAC/WITT/CGB	UNION PACIFIC SIGNAL DESIGN	DES: CGB DIG: CGB CHK: RCB A.F.E. 16574 ID= 127507640.3	UNION PACIFIC RAILROAD VALLEY JCT., ILL. TO POPLAR BLUFF, MO. C.T.C. CIRCUITS OFFICE OF CHIEF ENG'R SIGNALS OMAHA NEBR.	DATE 12-21-94 SHEET 3 DWG 76.4 S-1275-M

(REV. 2-25-91) (RHE4CGN.3)

DATE	
2-28-38	D
3-21-38	MP
6-28-38	
1-21-54	

GENERAL RAILWAY SIGNAL CO., ROCHESTER, N.Y. CM4431-4 Pg.54

REV. 5-31-96 INSTALL E.C. MENARD JCT. TO RADDLE JCT. WO#15574 3-25-96 RGB JEH/WITT/CGB	REV. 5-31-96 INSTALL GENISYS WO#13821 3-22-96 JEH/WITT/WDA	REV 9-21-94 SIGNAL ASPECTS CHANGES Rockwood JCT. To Gerham HAR	MADE RADDLE JCT. RIGHT HAND T.O. 1-25-91 WITT GRF	REV. 10-31-63 SID. SW. REM. 11-20-63 JFR	REV 3-28-58 ACCT HOR & SW CIR REV BIASED RELAYS ADDED. 1-10-61 JHC	UN. PAC R.R.CO. S-1275-M DW. ~~763-66~~ 76.4 SH. 4 PLACED IN SERVICE INSPECTED BY

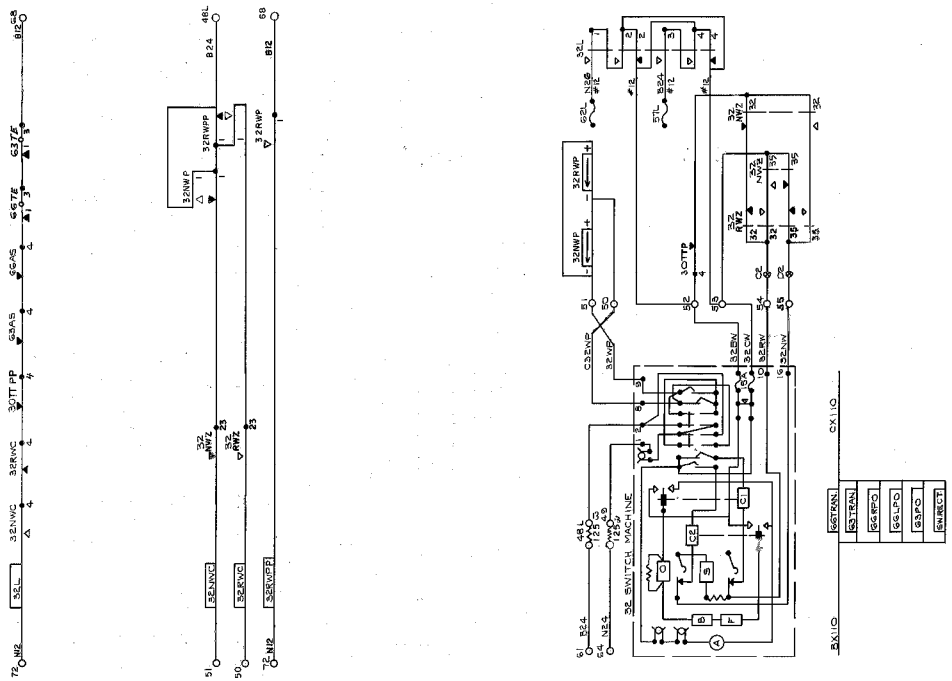

RADDLE JCT.
NORTH END
CHESTER SUBDIVISION
M.P. 76.40
6'X6' HOUSE

= IN
= OUT

1 11-01-06 INSTALL FLASHERS, W/GATES & CWT TR 18 M.P. 76.15 AFE #58749 GRK / /SSD/JJF	UNION PACIFIC QUALITY PRODUCTIVITY SAFETY SIGNAL DESIGN	DES: DIG: SSD CHK: GRK A.F.E. ID= 127507640.4S	UNION PACIFIC RAILROAD VALLEY JCT., ILL. TO POPLAR BLUFF, MO. C.T.C. CIRCUITS Office of AVP Engineering - Design Omaha, Nebraska	DATE 11-01-06 SHEET 4 DWG 76.40 S-1275

TIF FILE ATTACHED TIF ID = 127507640 .4.TIF

	0	1	2	3	4	5	6	7	8	9	10	11	12	13	14	15
CONTROL WORD 1 CHASSIS POSITION J3	32 NWZ	32 RWZ					66 GZ	63 GZ						SNOZ	MCA	MCE
CONTROL WORD CHASSIS POSITION J																
CONTROL WORD CHASSIS POSITION J																

	0	1	2	3	4	5	6	7	8	9	10	11	12	13	14	15
INDICATION WORD 1 CHASSIS POSITION J4	32 NWK	32 RWK	SMK		66 GK	63 GK			30 TK		29-30 ASK		66 RAK	66 LAK	63 AK	
INDICATION WORD 2 CHASSIS POSITION J5	POK	32NW .PB	32RW .PB	SNO. ON.PB	SNO. OF.PB			66G .PB	63G .PB	63-66 ST.PB					MCR .PB	TEST .SW
INDICATION WORD CHASSIS POSITION J																
INDICATION WORD CHASSIS POSITION J																

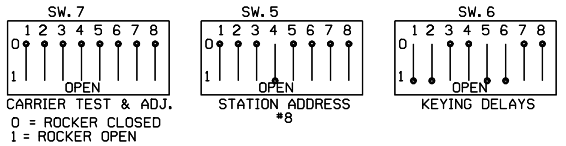

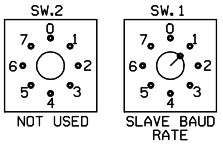

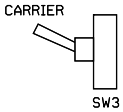

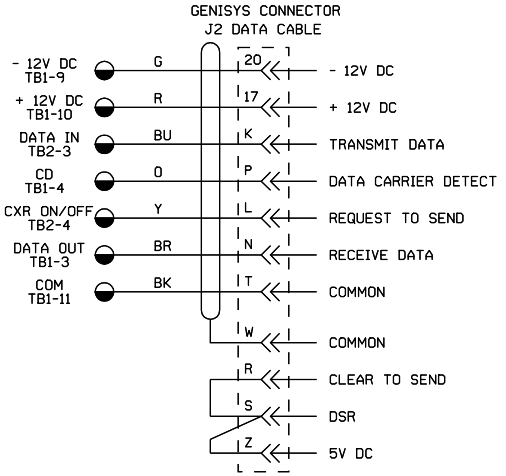

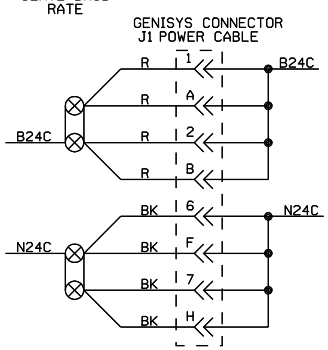

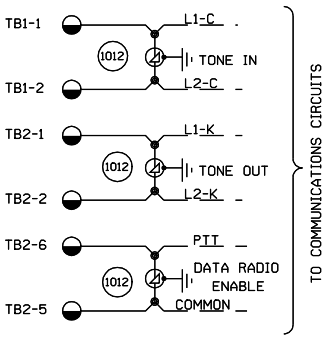

SET JUMPERS J1-J10 ON NVLE CONTROLLER BOARD TO B-C POSITION

POWER CABLE - US&S *N451458-3302	1 REQUIRED
DATA CABLE - ALPHA CABLE *5321 + US&S CONNECTOR KIT *N451170-1001	1 REQUIRED
CONTROL CABLES - US&S *N451458-3202	1 REQUIRED
INDICATION CABLES - US&S *N451458-3102	2 REQUIRED

GENISYS CARD FILE *N085718-1009
PROM ID = ILO9EOS

J1	N451441-7601
J2	N451441-5602
J3	N451441-7101
J4	N451441-7202
J5	N451441-7202
J6	
J7	
J8	
J9	
J10	
J11	
J12	
J13	
J14	
J15	
J16	
J17	
J18	

NOTES:

- TERMINAL ON RFL CARRIER
- EDGE CONNECTOR ON GENISYS UNIT
- TERMINAL ON GENISYS RACK
- GROUND PER SD54 DRAWINGS

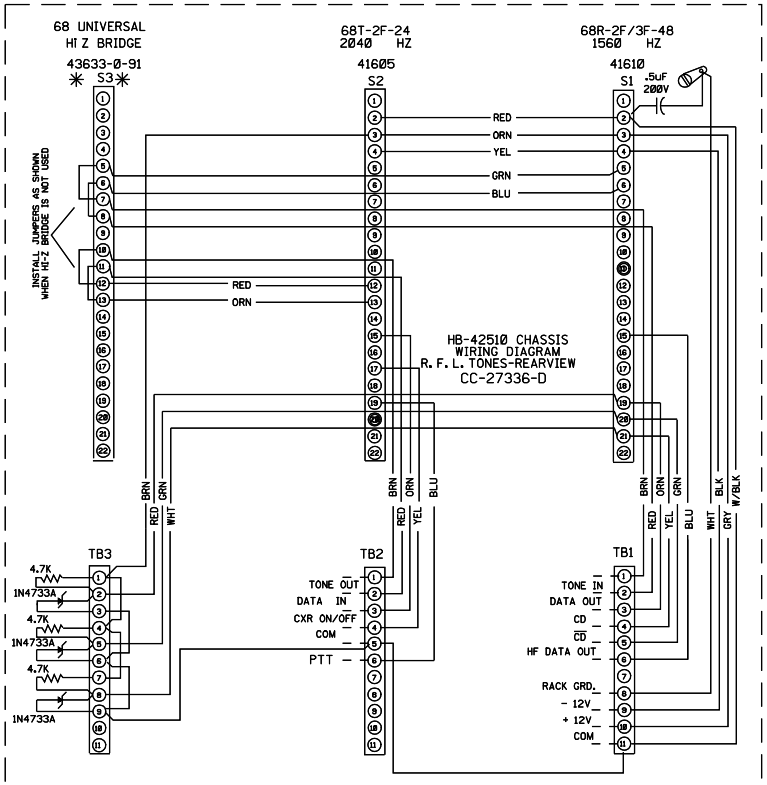

TRANS. IN	LINE FREQ.	REC. OUT
+5V	LF	+5V
0V	HF	0V
	CXR OFF	0V

CD OUT	CXR ON	+5V
	CXR OFF	0V
$\overline{CD}$ OUT	CXR ON	0V
	CXR OFF	+5V

CARRIER NOTES:

1. S=PRINTED CIRCUIT BOARD SOCKETS
3. WIRING IS NO.22 STRANDED OF COLOR MARKED UNMARKED WIRING IS BUSS WIRING
4. ● INDICATES KEY LOCATION.
5. RELAYS,WHEN USED ARE SHOWN UNENERGIZED.
6. • INDICATES NOT EQUIPPED.

CARRIER OPTION JUMPERS-OFFICE AND FIELD
TRANSMITTER: J105,J107,J110,J112,J502,J504
RECEIVER: J105,J107,J109,J119,J302
TO TRANSMIT CENTER FREQUENCY FOR TEST PURPOSES,MOVE JUMPER J107 ON THE TRANSMITTER TO J109.

D077

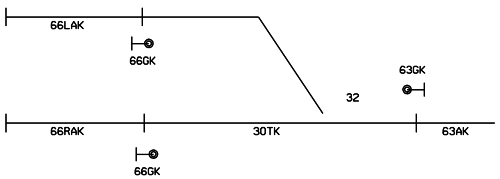

RADDLE JUNCTION, ILLINOIS
LINE: IL10 US&S GENISYS
CHESTER SUBDIVISION
TRACK PLAN AND
FUNCTION ASSIGNMENT

REV 5-31-96
INSTALL E.C.
MENARD JCT. TO
RADDLE JCT.
AFE 16574
3-6-96 RCB
JEH/WITT/CGB

UNION PACIFIC
QUALITY PRODUCTIVITY SAFETY
SIGNAL DESIGN

DES:	WDA
DIG:	WDA
CHK:	
A.F.E.	13821
ID=	127507630.5

UNION PACIFIC RAILROAD
VALLEY JUNCTION, ILL.
TO POPLAR BLUFF, MO.
GENISYS CONTROL CIRCUITS
OFFICE OF GEN'L SIGNAL ENG'R OMAHA NEBR.

DATE	12-5-94
SHEET	5
DWG	763-66
	S-1275-M

CONTROL WORD 1
J3 CONTROL CABLE

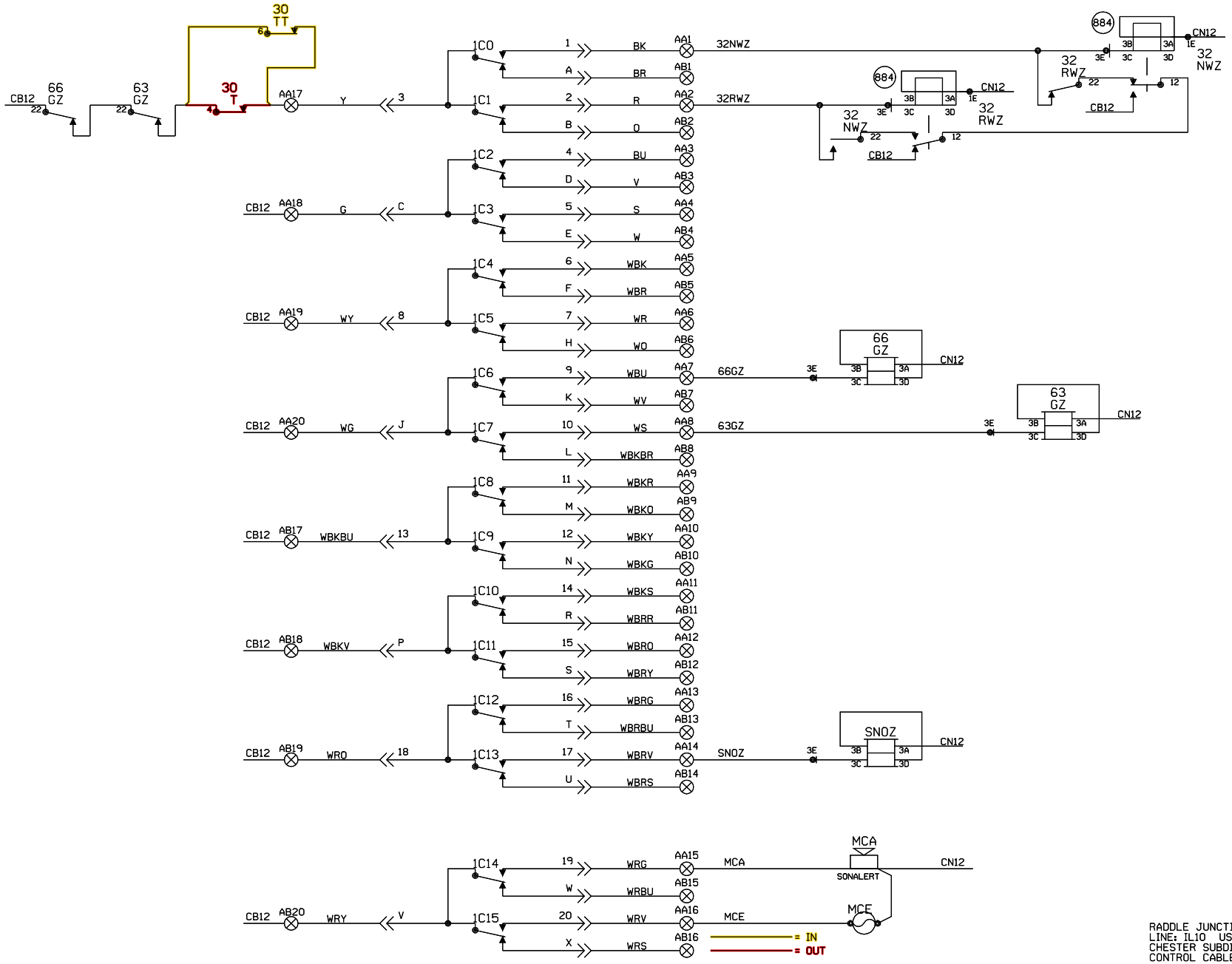

RADDLE JUNCTION, ILLINOIS
LINE: IL10 US&S GENISYS
CHESTER SUBDIVISION
CONTROL CABLE CIRCUITS

2 11-01-06 INSTALL FLASHERS, W/GATES & CWT TR 18 M.P. 76.15 AFE #58749 GRK / /SSD/JJF	REV 5-31-96 INSTALL E.C. MENARD JCT. TO RADDLE JCT. AFE 16574 3-6-96 RCB JEH/WITT/CGB	UNION PACIFIC SIGNAL DESIGN	DES: WDA DIG: WDA CHK: A.F.E. 13821 ID= 127507630.6	UNION PACIFIC RAILROAD VALLEY JUNCTION, ILL. TO POPLAR BLUFF, MO. GENISYS CONTROL CIRCUITS OFFICE OF GEN'L SIGNAL ENG'R OMAHA NEBR.	DATE 12-5-94 SHEET 6 DWG 763-66 S-1275-M

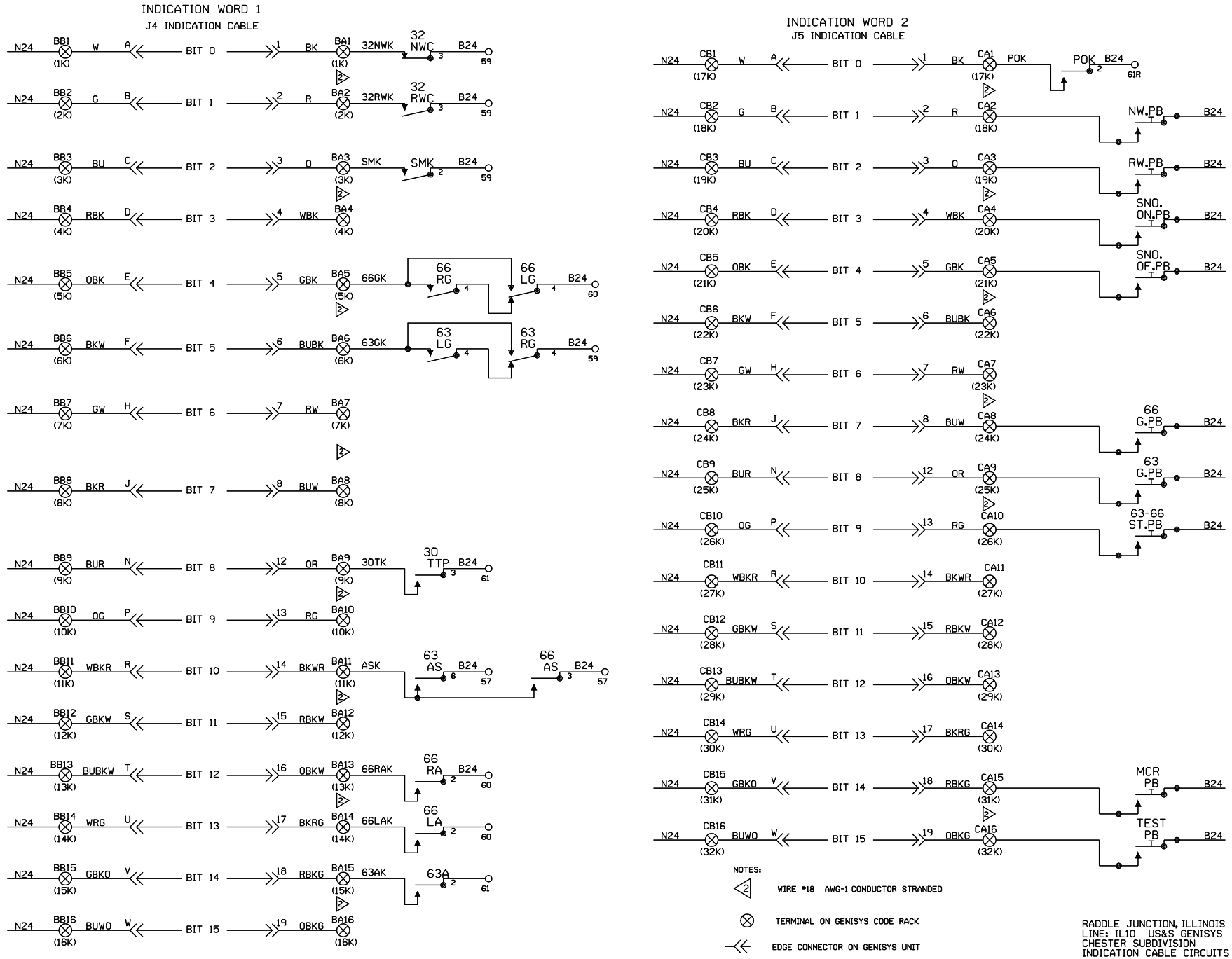
INDICATION WORD 1
J4 INDICATION CABLE
INDICATION WORD 2
J5 INDICATION CABLE
N24
BB1 (1K) W A BIT 0 1 BK BA1 (1K) 32NWK 32 NWC 3 B24 59
BB2 (2K) G B BIT 1 2 R BA2 (2K) 32RWK 32 RWC 3 B24 59
BB3 (3K) BU C BIT 2 3 O BA3 (3K) SMK SMK 2 B24 59
BB4 (4K) RBK D BIT 3 4 WBK BA4 (4K)
BB5 (5K) OBK E BIT 4 5 GBK BA5 (5K) 66GK 66 RG 4 66 LG 4 B24 60
BB6 (6K) BKW F BIT 5 6 BUBK BA6 (6K) 63GK 63 LG 4 63 RG 4 B24 59
BB7 (7K) GW H BIT 6 7 RW BA7 (7K)
BB8 (8K) BKR J BIT 7 8 BUW BA8 (8K)
BB9 (9K) BUR N BIT 8 12 OR BA9 (9K) 30TK 30 TTP 3 B24 61
BB10 (10K) OG P BIT 9 13 RG BA10 (10K)
BB11 (11K) WBKR R BIT 10 14 BKWR BA11 (11K) ASK 63 AS 6 B24 57 66 AS 3 B24 57
BB12 (12K) GBKW S BIT 11 15 RBKW BA12 (12K)
BB13 (13K) BUBKW T BIT 12 16 OBKW BA13 (13K) 66RAK 66 RA 2 B24 60
BB14 (14K) WRG U BIT 13 17 BKRG BA14 (14K) 66LAK 66 LA 2 60
BB15 (15K) GBKO V BIT 14 18 RBKG BA15 (15K) 63AK 63A 2 61
BB16 (16K) BUWO W BIT 15 19 OBKG BA16 (16K)
CB1 (17K) W A BIT 0 1 BK CA1 (17K) POK POK 2 B24 61R
CB2 (18K) G B BIT 1 2 R CA2 (18K) NW.PB B24
CB3 (19K) BU C BIT 2 3 O CA3 (19K) RW.PB B24
CB4 (20K) RBK D BIT 3 4 WBK CA4 (20K) SNO. ON.PB B24
CB5 (21K) OBK E BIT 4 5 GBK CA5 (21K) SNO. OF.PB B24
CB6 (22K) BKW F BIT 5 6 BUBK CA6 (22K)
CB7 (23K) GW H BIT 6 7 RW CA7 (23K)
CB8 (24K) BKR J BIT 7 8 BUW CA8 (24K) 66 G.PB B24
CB9 (25K) BUR N BIT 8 12 OR CA9 (25K) 63 G.PB B24
CB10 (26K) OG P BIT 9 13 RG CA10 (26K) 63-66 ST.PB B24
CB11 (27K) WBKR R BIT 10 14 BKWR CA11 (27K)
CB12 (28K) GBKW S BIT 11 15 RBKW CA12 (28K)
CB13 (29K) BUBKW T BIT 12 16 OBKW CA13 (29K)
CB14 (30K) WRG U BIT 13 17 BKRG CA14 (30K)
CB15 (31K) GBKO V BIT 14 18 RBKG CA15 (31K) MCR PB B24
CB16 (32K) BUWO W BIT 15 19 OBKG CA16 (32K) TEST PB B24
NOTES:
2 WIRE #18 AWG-1 CONDUCTOR STRANDED
TERMINAL ON GENISYS CODE RACK
EDGE CONNECTOR ON GENISYS UNIT
RADDLE JUNCTION, ILLINOIS
LINE: IL10 US&S GENISYS
CHESTER SUBDIVISION
INDICATION CABLE CIRCUITS
REV 5-31-96
INSTALL E.C.
MENARD JCT. TO
RADDLE JCT.
AFE 16574
3-6-96 RCB
JEH/WITT/CGB
UNION PACIFIC
QUALITY PRODUCTIVITY SAFETY
SIGNAL DESIGN
DES: WDA
DIG: WDA
CHK:
A.F.E. 13821
ID= 127507630.7
UNION PACIFIC RAILROAD
VALLEY JUNCTION, ILL.
TO POPLAR BLUFF, MO.
GENISYS CONTROL CIRCUITS
OFFICE OF GEN'L SIGNAL ENG'R
OMAHA NEBR.
DATE 12-5-94
SHEET 7
DWG 763-66
S-1275-M

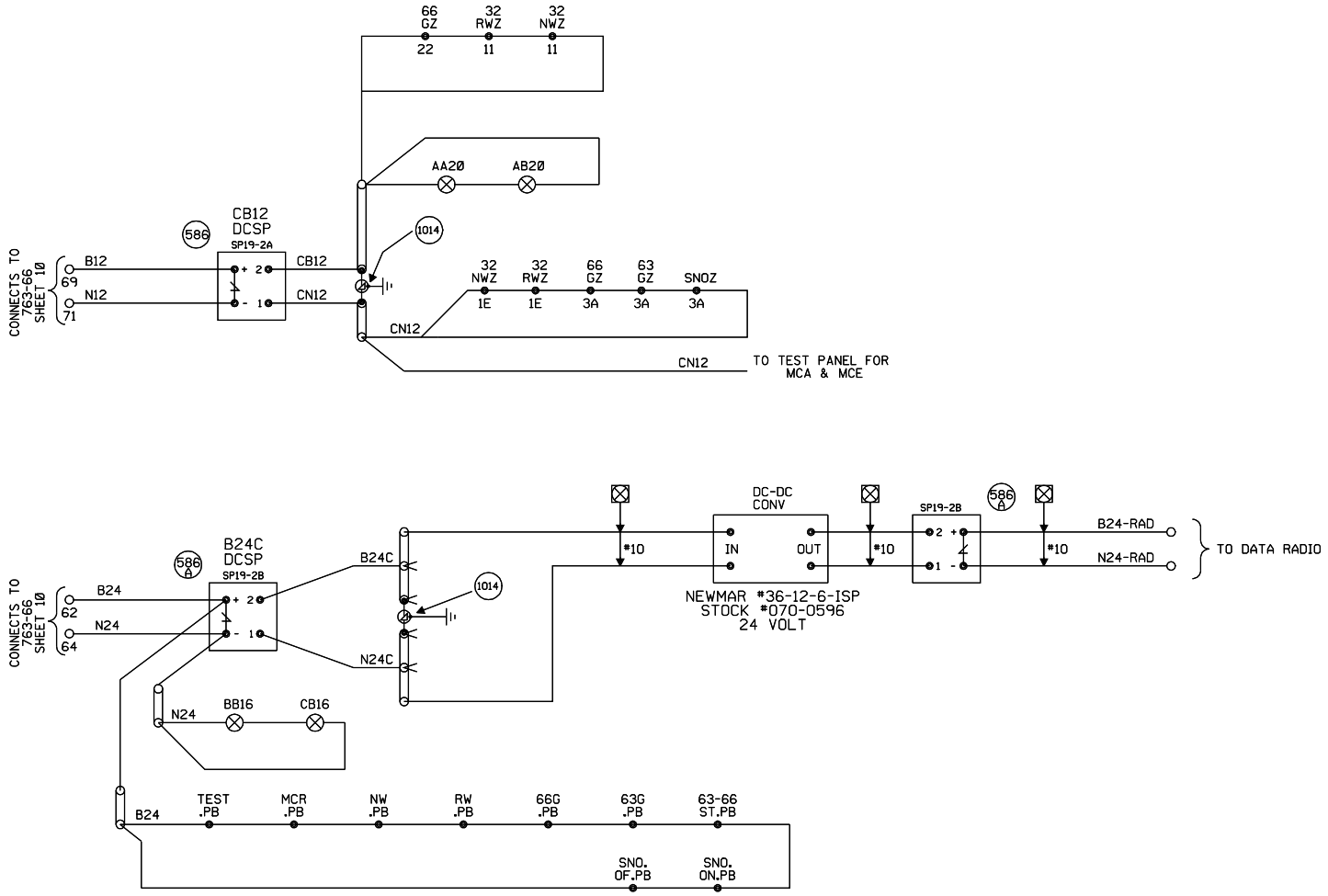

RADDLE JUNCTION, ILLINOIS
LINE: IL10 US&S GENISYS
CHESTER SUBDIVISION
POWER DISTRIBUTION

							REV 5-31-96 INSTALL E.C. MENARD JCT. TO RADDLE JCT. AFE 16574 3-6-96 RCB JEH/WITT/CGB	UNION PACIFIC QUALITY PRODUCTIVITY SAFETY SIGNAL DESIGN	DES: WDA DIG: WDA CHK: A.F.E. 13821 ID= 127507630.8	UNION PACIFIC RAILROAD VALLEY JUNCTION, ILL. TO POPLAR BLUFF, MO. GENISYS CONTROL CIRCUITS OFFICE OF GEN'L SIGNAL ENG'R OMAHA NEBR.	DATE 12-5-94 SHEET 8 DWG 763-66 S-1275-M

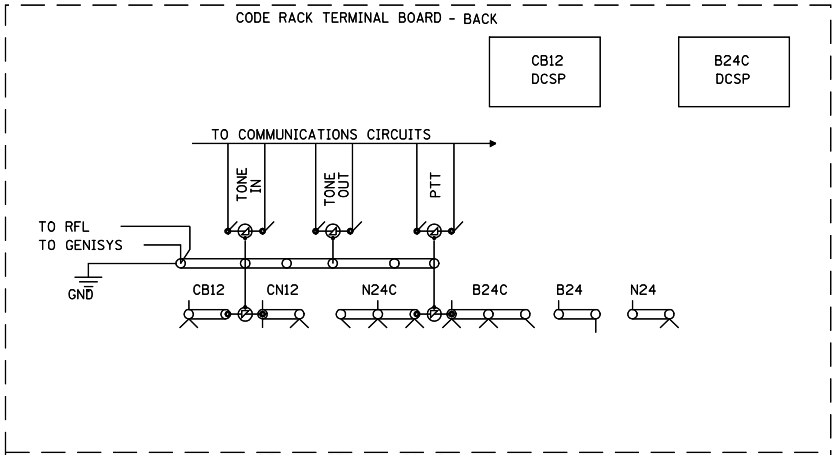

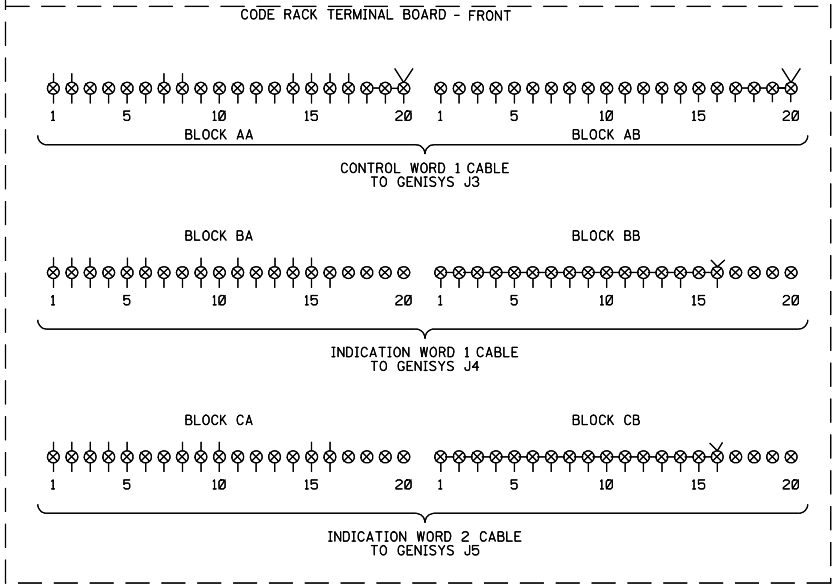

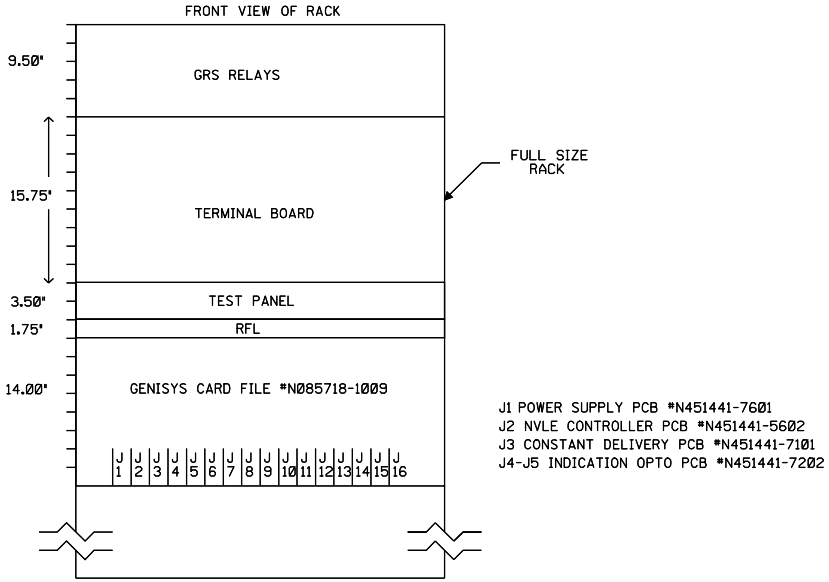

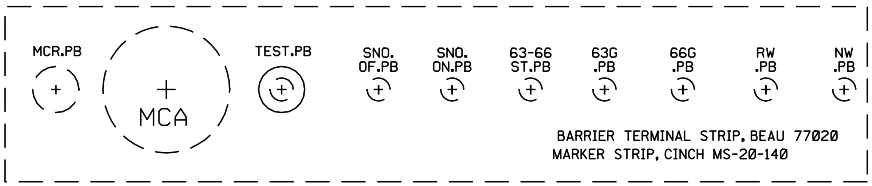

RADDLE JUNCTION, ILLINOIS
LINE: IL10 US&S GENISYS
CHESTER SUBDIVISION
RACK AND TERMINAL
BOARD LAYOUT

REV 5-31-96
INSTALL E.C.
MENARD JCT. TO
RADDLE JCT.
AFE 16574
3-6-96 RCB
JEH/WITT/CGB

UNION PACIFIC
SIGNAL DESIGN

DES:	WDA
DIG:	WDA
CHK:	
A.F.E.	13821
ID=	127507630.9

UNION PACIFIC RAILROAD
VALLEY JUNCTION, ILL.
TO POPLAR BLUFF, MO.
GENISYS CONTROL CIRCUITS
OFFICE OF GEN'L SIGNAL ENG'R OMAHA NEBR.

DATE	12-5-94
SHEET	9
DWG	763-66
	S-1275-M

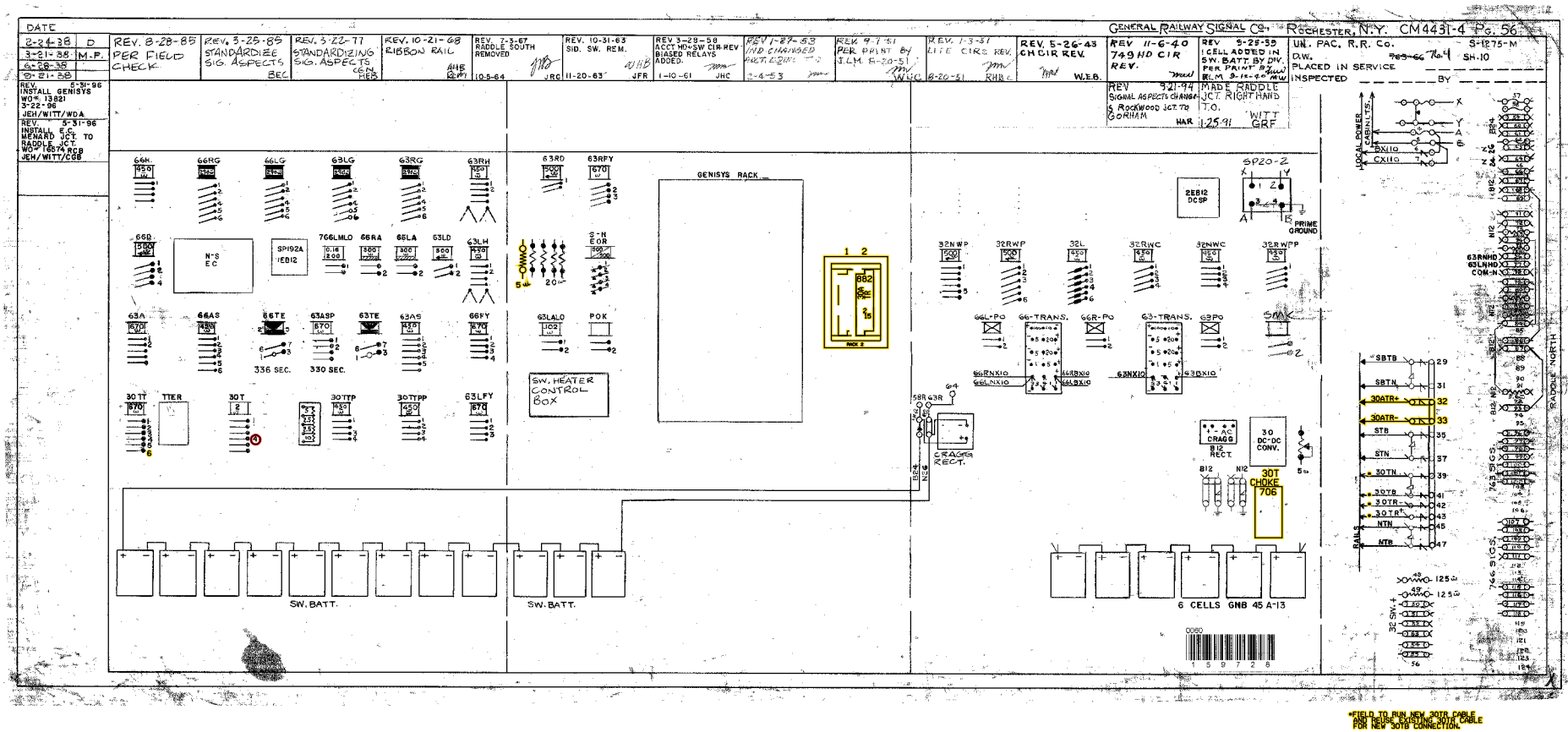

RADDLE JCT.
NORTH END
CHESTER SUBDIVISION
M.P. 76.40
6'X6' HOUSE

1 11-01-06 INSTALL FLASHERS, W/GATES & CWT TR 18 M.P. 76.15 AFE #58749 GRK / /SSD/JJF	UNION PACIFIC QUALITY PRODUCTIVITY SAFETY SIGNAL DESIGN	DES: DIG: SSD CHK: GRK A.F.E. ID= 127507640.10S	**UNION PACIFIC RAILROAD** VALLEY JCT., ILL. TO POPLAR BLUFF, MO. C.T.C. CIRCUITS Office of AVP Engineering - Design Omaha, Nebraska

DATE 11-01-06
SHEET 10
DWG 76.40
S-1275

TIF FILE ATTACHED TIF ID = 127507640 .10.TIF

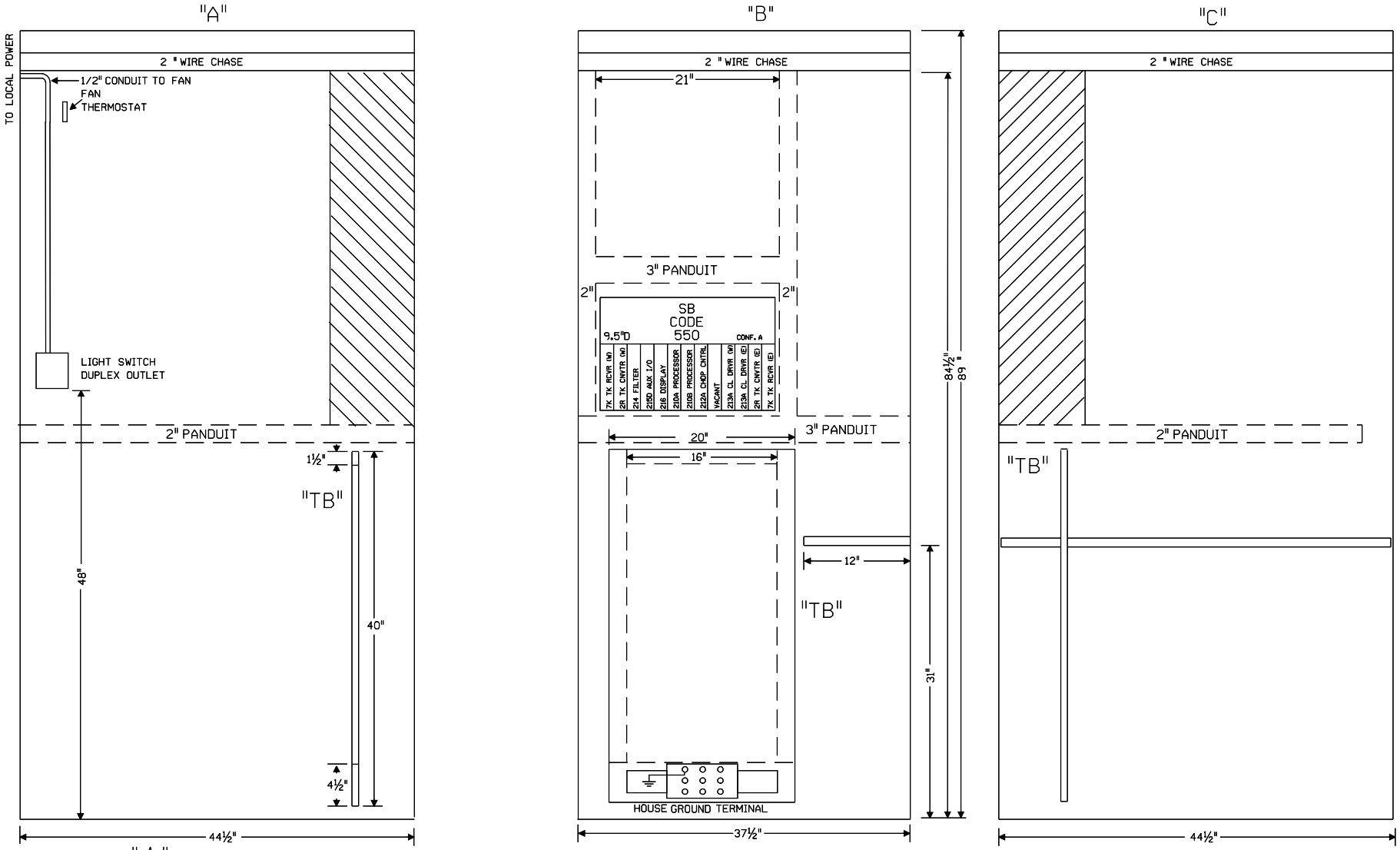

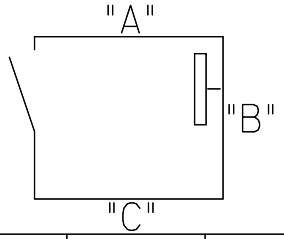

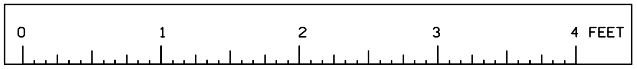

SCALE: 1.5 INCHES = 1 FOOT

RADDLE JCT.
SIGNALS 1W-E
CHESTER SUBDIVISION
M.P. 76.4

3½' X 4' HOUSE

				REV. 5-31-96 IN-SERVICE 3-22-96 RCB RAC/WITT/CGB	MODIFICATION LEVEL Q.A. LAST LEVEL CHK'D. AR LAST LEVEL MOD. THIS TYP. AR LAST LEVEL BY DESIGNER. 00 CHANGED FROM TYP.? Y/N	UNION PACIFIC QUALITY PRODUCTIVITY SAFETY SIGNAL DESIGN	DES: CGB DIG: CGB CHK: RCB A.F.E. 16574 ID= 127507460.11

UNION PACIFIC RAILROAD
VALLEY JCT., ILL. TO
POPLAR BLUFF, MO.
C.T.C. CIRCUITS

OFFICE OF CHIEF ENG'R SIGNALS — OMAHA NEBR.

DATE 12-21-94
SHEET 11
DWG 76.4
S-1275-M

(REV. 12-15-93) (2TE4INTRC.3)