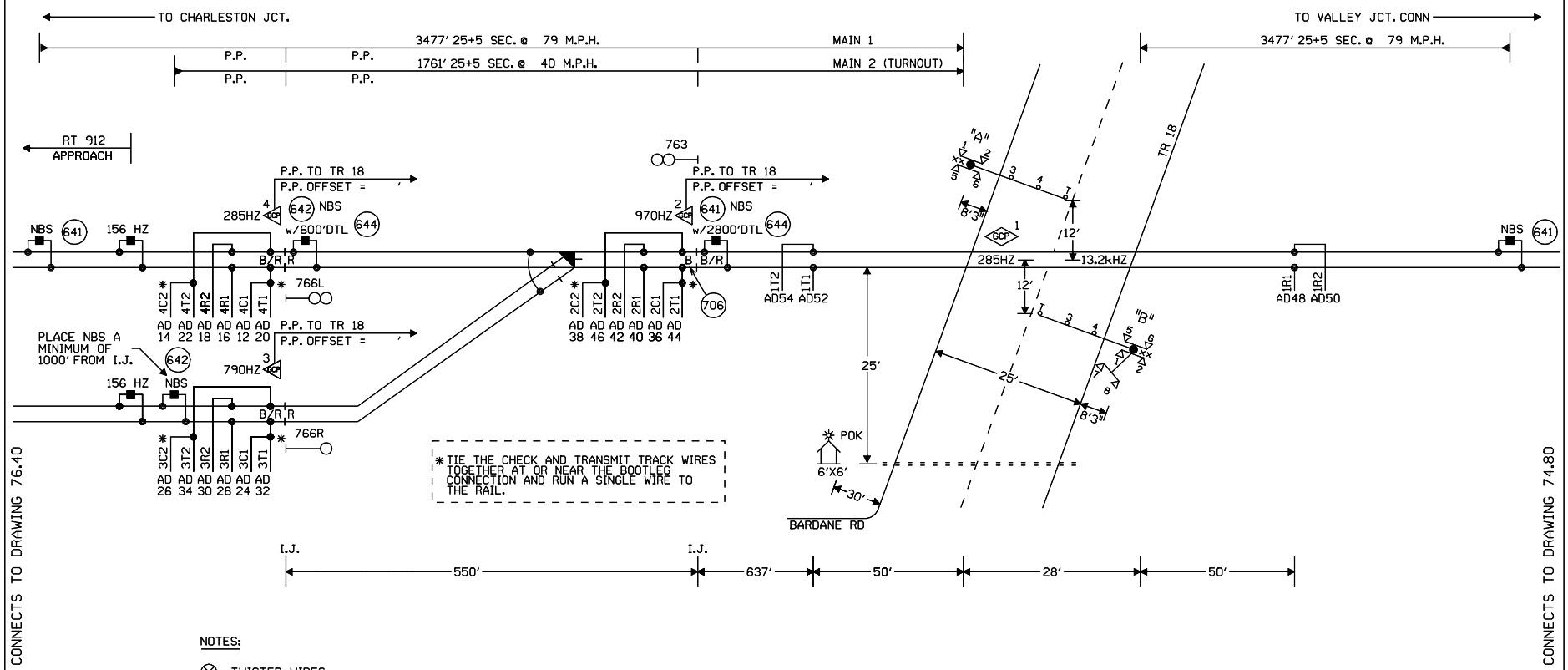

* TIE THE CHECK AND TRANSMIT TRACK WIRES TOGETHER AT OR NEAR THE BOOTLEG CONNECTION AND RUN A SINGLE WIRE TO THE RAIL.

NOTES:

⊗ = TWISTED WIRES
INSULATED 1 TWIST PER FT.
ALL TRACK WIRES 2C. #6

TRANSMITTER AND RECEIVER LEADS TO BE SEPARATED BY AT LEAST 12" IN TRENCH, LENGTHS SHOULD NOT EXCEED MANUFACTURES RECOMMENDATION.

TOP OF FOUNDATION TO BE AT SAME ELEVATION AS THE SURFACE OF THE TRAVELED WAY & NO MORE THAN 4" ABOVE THE SURFACE OF THE GROUND.

ALL BUNGALOW WIRING TO BE #16 AWG FLEX UNLESS OTHERWISE SPECIFIED EXCEPT ALL GROUND WIRE TO BE #6 AWG FLEX OR LARGER.

ALL WIRING IN GATE MECHANISM TO BE #10 "AWG FLEX".

REFER TO UP STANDARD DWG FOR BUNGALOW GROUNDING.

ALL LIGHTS TO BE 12" ROUNDELS.

= = = = = = 4" X 40' CONDUIT

LIGHTS: LED LIGHTS

GATE A: 20'
GATE B: 20'

xx = BELL

CONSTRUCTION NOTES

1. REVISE OS TRACK CIRCUIT AS PARALLEL FOULING M.P. 76.40.
2. INSTALL (1) TRACK CHOKE(S) (TAB 706) TO 30T TRACK BATTERY CIRCUIT AT M.P. 76.40.
3. FIELD TO RUN NEW TRACK CABLE FOR 30TR AND 30ATR TRACK CIRCUITS.

NEW SHEET

JACOB, ILLINOIS
TR 18
M.P. 76.15
CHESTER SUBDIVISION
D.O.T.#436 216M

S ⟵ ⟶ N

1 11-01-06 INSTALL FLASHERS, W/GATES & CWT TR 18 M.P. 76.15 AFE #58749 JTB / /SSD/RDD	MODIFICATION LEVEL		UNION PACIFIC SIGNAL DESIGN	DES: SSD	UNION PACIFIC RAILROAD	DATE 11-01-06
	Q. A. LAST LEVEL CHECKED	DP		DIG: SSD	VALLEY JCT. CONN, ILLINOIS TO CHARLESTON JCT., MISSOURI	SHEET 1
	LAST LEVEL MOD THIS TYPICAL	DP		CHK: JTB	C.T.C. CIRCUITS	DWG 76.15
	LAST LEVEL BY DESIGNER	DP		A.F.E. 58749	Office of AVP Engineering - Design Omaha, Nebraska	S-1275
	CHANGED FROM TYPICAL? REV 02.26.07 4K 1TKBG.1	Y		ID= 127507615.1x		

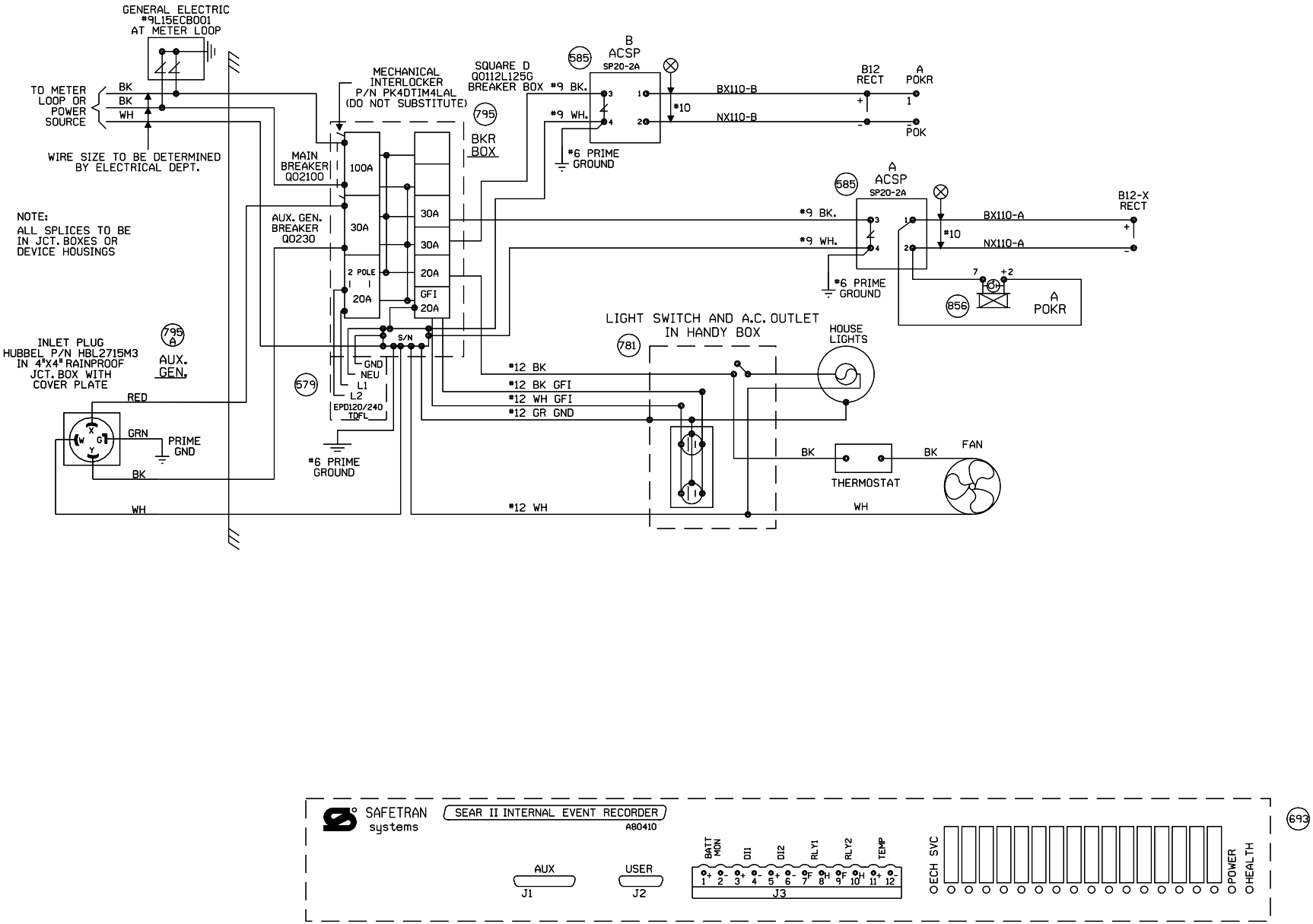

NEW SHEET

JACOB, ILLINOIS
TR 18
M.P. 76.15
CHESTER SUBDIVISION
D.O.T.#436 216M

1 11-01-06 INSTALL FLASHERS, W/GATES & CWT TR 18 M.P. 76.15 AFE #58749 GRK / /SSD/JJF	MODIFICATION LEVEL		UNION PACIFIC QUALITY PRODUCTIVITY SAFETY SIGNAL DESIGN	DES: SSD	UNION PACIFIC RAILROAD	DATE 11-01-06
	Q. A. LAST LEVEL CHECKED	DP		DIG: SSD	VALLEY JCT. CONN, ILLINOIS TO CHARLESTON JCT., MISSOURI	SHEET 2
	LAST LEVEL MOD THIS TYPICAL	DP		CHK: GRK	C.T.C. CIRCUITS	DWG 76.15
	LAST LEVEL BY DESIGNER	DP		A.F.E. 58749	Office of AVP Engineering - Design Omaha, Nebraska	S-1275
	CHANGED FROM TYPICAL?	N		ID= 127507615.2X		
	REV 02.26.07 4K SEARAC.2					

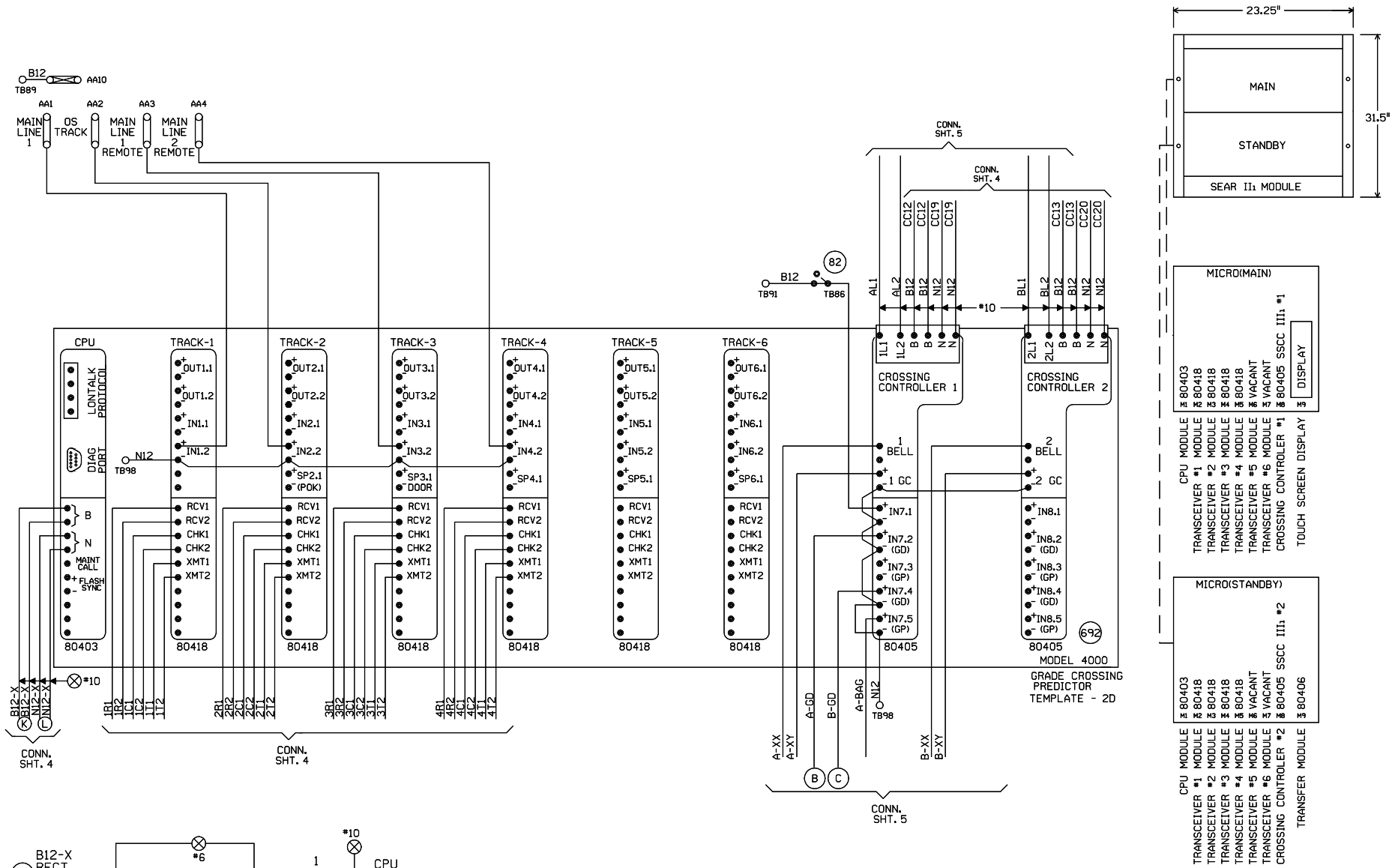

"Mf" FREQUENCY (HZ)	MAXIMUM TRANSMIT WIRE LENGTH (FEET)
86	100
114	125
156	150
211	200
285-970	250

NOTE:
EACH TRANSMITTER TO RAIL WIRE FROM XMT1 AND XMT2 MUST NOT EXCEED THE MAXIMUM LENGTH SPECIFIED IN THE TABLE SHOWN. THE RECEIVER WIRE LENGTH IS NOT CRITICAL. DOES NOT APPLY TO 6 TRACK WIRE APPLICATION.

NEW SHEET

JACOB, ILLINOIS
TR 18
M.P. 76.15
CHESTER SUBDIVISION
D.O.T.#436 216M

1	11-01-06	INSTALL FLASHERS, W/GATES & CWT TR 18 M.P. 76.15 AFE #58749	GRK / /SSD/JJF

MODIFICATION LEVEL

Q.A. LAST LEVEL CHECKED	DP
LAST LEVEL MOD THIS TYPICAL	DP
LAST LEVEL BY DESIGNER	DP
CHANGED FROM TYPICAL?	Y

REV 02.26.07 4K 4TK84GF.3

UNION PACIFIC
QUALITY PRODUCTIVITY SAFETY
SIGNAL DESIGN

DES: SSD
DIG: SSD
CHK: GRK
A.F.E. 58749
ID= 127507615.3X

UNION PACIFIC RAILROAD
VALLEY JCT. CONN, ILLINOIS TO CHARLESTON JCT., MISSOURI
C.T.C. CIRCUITS
Office of AVP Engineering - Design Omaha, Nebraska

DATE 11-01-06
SHEET 3
DWG 76.15
S-1275

Minimum Program Steps Report

Location and SIN

DOT Number: 436216M
Milepost Number: 76.15
Site Name: Jacob, IL

SIN: 762010010016 *

* Parameter is part of office check number calculation.

MCF and Template Selection

MCF Name: GCP-T6X-01-2.mcf
MCF Revision: 012
MCFCRC: 0DFE7A0C

Template = 2D:1 Bi, 5 Rem *

* Parameter is part of office check number calculation.

Minimum Program Steps

TEMPLATE: track 1-Bi, Island
Track 1 : GCP Frequency = 285 Hz
Track 1 : Approach Distance = 3477 ft See Plans
Track 1 : Prime Warning Time = 25 sec *
Track 1 : GCP Transmit Level = Medium Set in Field
Track 1 : Isl Frequency = 13.2 kHz

TEMPLATE: track 2-Remote Prime
Track 2 : GCP Frequency = 970 Hz
Track 2 : Approach Distance = 550 ft See Plans
Track 2 : Prime Warning Time = 25 sec *
Track 2 : Prime Offset Distance = 687 ft Verify in Field
Track 2 : GCP Transmit Level = Medium Set in Field

TEMPLATE: track 3-Remote Prime
Track 3 : GCP Frequency = 790 Hz
Track 3 : Approach Distance = 1000 ft See Plans
Track 3 : Prime Warning Time = 25 sec *
Track 3 : Prime Offset Distance = 1237 ft Verify in Field
Track 3 : GCP Transmit Level = Medium Set in Field

TEMPLATE: track 4-Remote Prime
Track 4 : GCP Frequency = 285 Hz
Track 4 : Approach Distance = 2240 ft See Plans
Track 4 : Prime Warning Time = 25 sec *
Track 4 : Prime Offset Distance = 1237 ft Verify in Field
Track 4 : GCP Transmit Level = Medium Set in Field

TEMPLATE: AND 1 XR
AND 1 Enable Used = Yes *

TEMPLATE: IP assignment 1
IN 1.2 = Out Of Service IP 1 *
IN 2.2 = Out Of Service IP 2 *
IN 3.2 = Out Of Service IP 3 *
IN 4.2 = Out Of Service IP 4 *

TEMPLATE: IP assignment SSCC
IN 7.1 = AND 1 XR Enable *

GCP: track 1
Track 1 : Island Distance = 128 ft *

ADVANCED: out of service
OOS Control = OOS IPs *

ADVANCED: out of service 2
T3 OOS Control = OOS Input 4 *
T4 OOS Control = OOS Input 3 *

* Parameter is part of office check number calculation.

Check Numbers

Office Check Number: 2C11C01E
Config. Check Number: 4701D126
(Based on MCF Revision 012)

Parameters not part of office check number calculation:

Track 1 : GCP Frequency = 285 Hz
Track 1 : Approach Distance = 3477 ft See Plans
Track 1 : GCP Transmit Level = Medium Set in Field
Track 1 : Isl Frequency = 13.2 kHz
Track 2 : GCP Frequency = 970 Hz
Track 2 : Approach Distance = 550 ft See Plans
Track 2 : Prime Offset Distance = 687 ft Verify in Field
Track 2 : GCP Transmit Level = Medium Set in Field
Track 3 : GCP Frequency = 790 Hz
Track 3 : Approach Distance = 1000 ft See Plans
Track 3 : Prime Offset Distance = 1237 ft Verify in Field
Track 3 : GCP Transmit Level = Medium Set in Field
Track 4 : GCP Frequency = 285 Hz
Track 4 : Approach Distance = 2240 ft See Plans
Track 4 : Prime Offset Distance = 1237 ft Verify in Field
Track 4 : GCP Transmit Level = Medium Set in Field

Comments

<none>

Configuration Package File

Filename: 127507615-436216M.pac
Path:
Date/Time:

NEW SHEET

JACOB, ILLINOIS
TR 18
M.P. 76.15
CHESTER SUBDIVISION
D.O.T.#436 216M

1	11-01-06
INSTALL FLASHERS, W/GATES & CWT TR 18 M.P. 76.15 AFE #58749	GRK / /SSD/JJF

NOTE: Actual OFFSET and ISLAND distances must be entered by field personnel.

UNION PACIFIC
QUALITY PRODUCTIVITY SAFETY
SIGNAL DESIGN

DES:	SSD
DIG:	SSD
CHK:	GRK
A.F.E.	58749
ID= 127507615.3AX	

UNION PACIFIC RAILROAD

VALLEY JCT. CONN, ILLINOIS TO
CHARLESTON JCT., MISSOURI
C.T.C. CIRCUITS

Office of AVP Engineering - Design Omaha, Nebraska

DATE	11-01-06
SHEET	3A
DWG	76.15
	S-1275

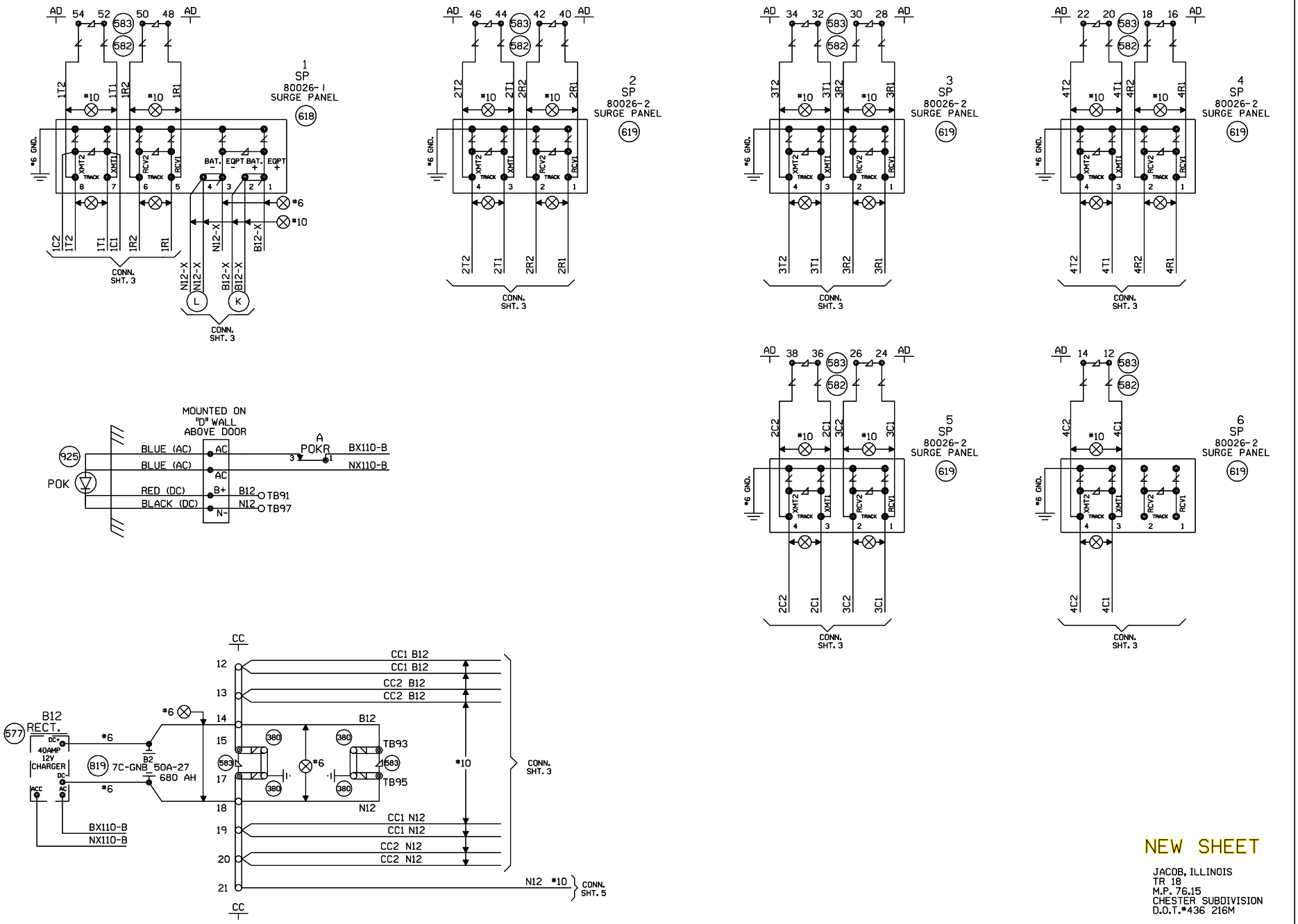

NEW SHEET

JACOB, ILLINOIS
TR 18
M.P. 76.15
CHESTER SUBDIVISION
D.O.T.#436 216M

1	11-01-06	INSTALL FLASHERS, W/GATES & CWT TR 18 M.P. 76.15 AFE #58749	GRK / SSD/JJF

MODIFICATION LEVEL	
Q. A. LAST LEVEL CHECKED	DP
LAST LEVEL MOD THIS TYPICAL	DP
LAST LEVEL BY DESIGNER	DP
CHANGED FROM TYPICAL?	Y
REV 02.26.07 4K 4TKSPGFC.4	

UNION PACIFIC
QUALITY PRODUCTIVITY SAFETY
SIGNAL DESIGN

DES:	SSD
DIG:	SSD
CHK:	GRK
A.F.E.	58749
ID= 127507615.4X	

UNION PACIFIC RAILROAD

VALLEY JCT. CONN, ILLINOIS TO CHARLESTON JCT., MISSOURI
C.T.C. CIRCUITS

Office of AVP Engineering - Design Omaha, Nebraska

DATE	11-01-06
SHEET	4
DWG	76.15
	S-1275

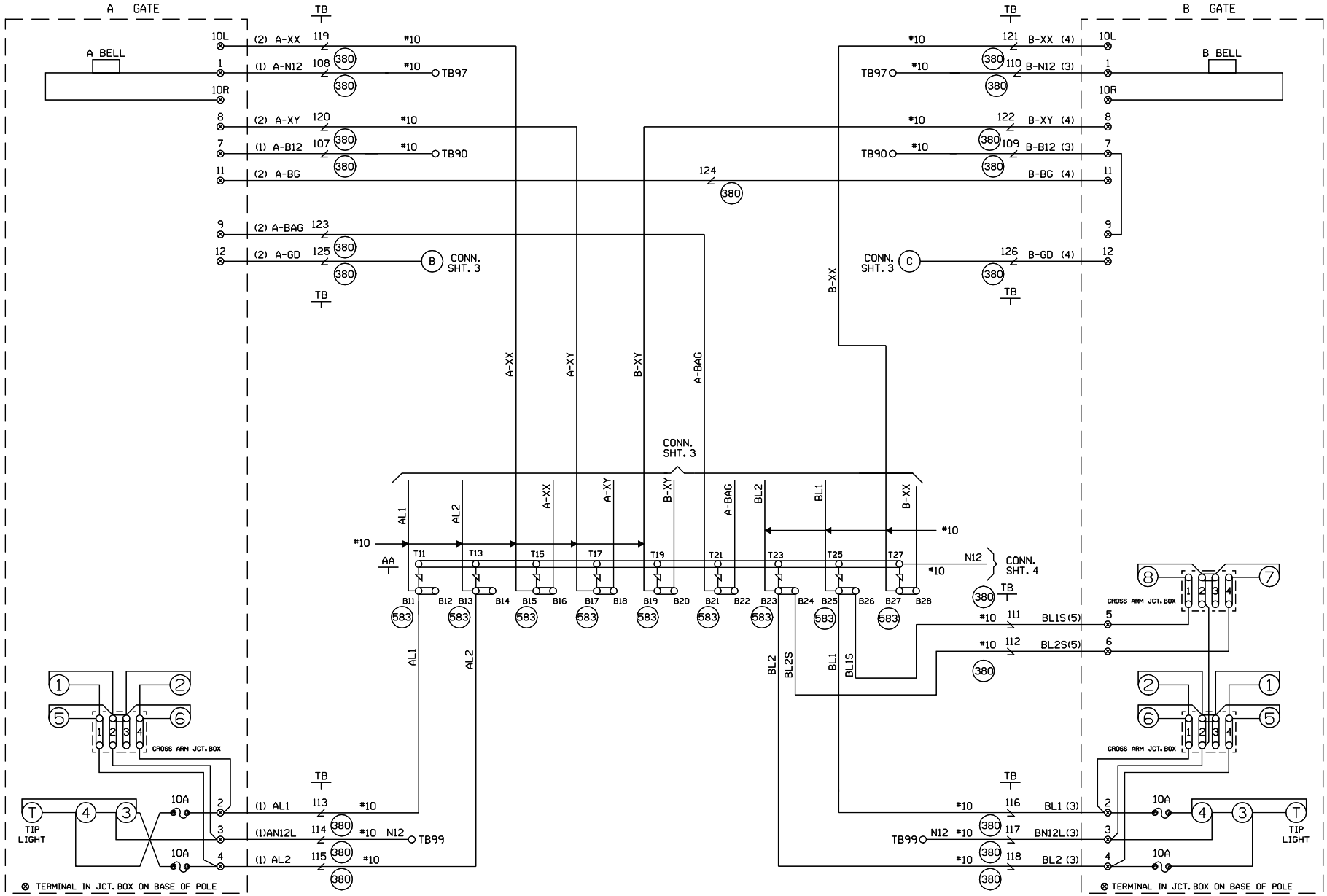

CABLE TABULATION

CABLE NO. 1 5C. NO.6 U.G.B.T.
CABLE NO. 2 7C. NO.14 U.G.B.T.
CABLE NO. 3 5C. NO.6 U.G.B.T.
CABLE NO. 4 7C. NO.14 U.G.B.T.
CABLE NO. 5 2C. NO.6 U.G.B.T.

NEW SHEET

JACOB, ILLINOIS
TR 18
M.P. 76.15
CHESTER SUBDIVISION
D.O.T.#436 216M

1 11-01-06 INSTALL FLASHERS, W/GATES & CWT TR 18 M.P. 76.15 AFE #58749 GRK / /SSD/JJF	MODIFICATION LEVEL		UNION PACIFIC SAFETY SIGNAL DESIGN	DES: SSD	UNION PACIFIC RAILROAD
	Q.A. LAST LEVEL CHECKED	DP		DIG: SSD	VALLEY JCT. CONN, ILLINOIS TO CHARLESTON JCT., MISSOURI
	LAST LEVEL MOD THIS TYPICAL	DP		CHK: GRK	C.T.C CIRCUITS
	LAST LEVEL BY DESIGNER	DP		A.F.E. 58749	Office of AVP Engineering - Design Omaha, Nebraska
	CHANGED FROM TYPICAL?	Y		ID= 127507615.5X	
	REV 02.26.07 4K GFSLTYP.5				

DATE 11-01-06
SHEET 5
DWG 76.15
S-1275

WCH 3597

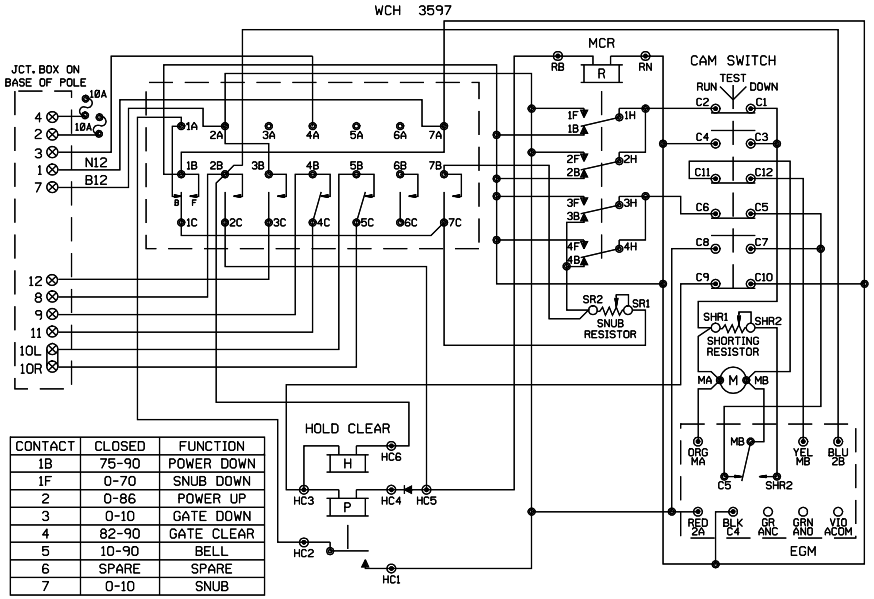

CONTACT	CLOSED	FUNCTION
1B	75-90	POWER DOWN
1F	0-70	SNUB DOWN
2	0-86	POWER UP
3	0-10	GATE DOWN
4	82-90	GATE CLEAR
5	10-90	BELL
6	SPARE	SPARE
7	0-10	SNUB

WCH 3597-RB

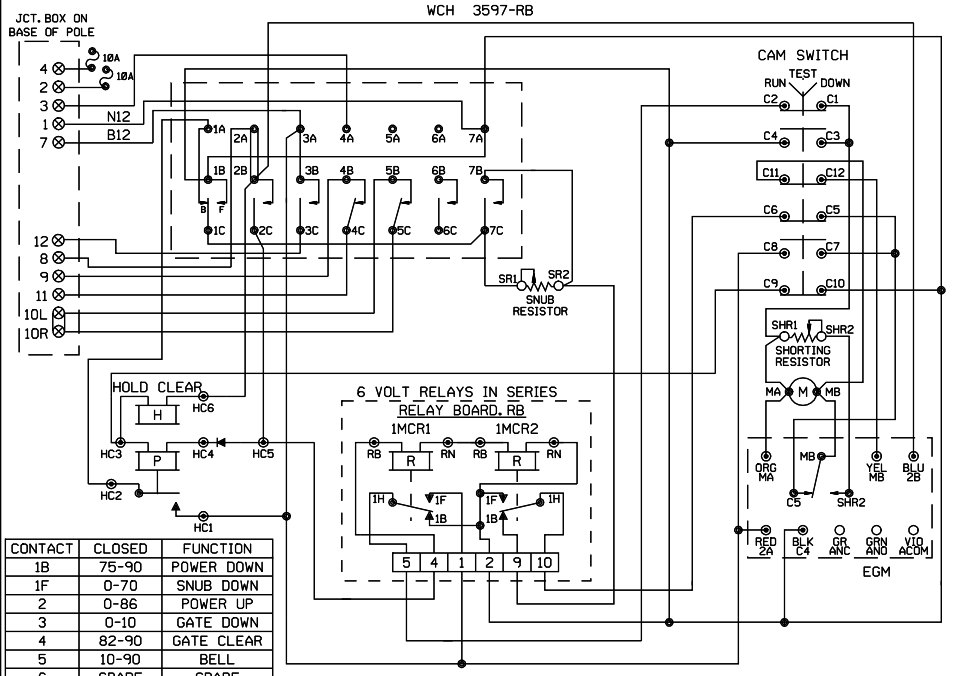

CONTACT	CLOSED	FUNCTION
1B	75-90	POWER DOWN
1F	0-70	SNUB DOWN
2	0-86	POWER UP
3	0-10	GATE DOWN
4	82-90	GATE CLEAR
5	10-90	BELL
6	SPARE	SPARE
7	0-10	SNUB

WCH 3593-E

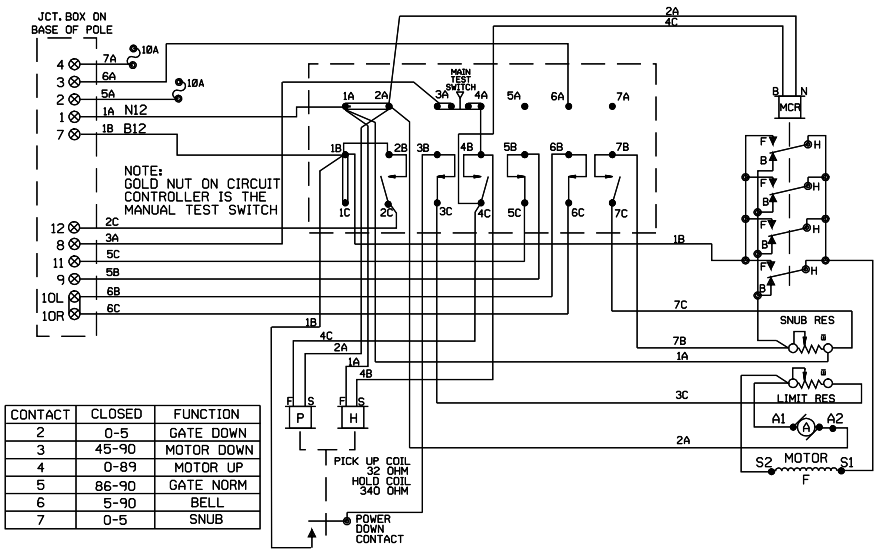

CONTACT	CLOSED	FUNCTION
2	0-5	GATE DOWN
3	45-90	MOTOR DOWN
4	0-89	MOTOR UP
5	86-90	GATE NORM
6	5-90	BELL
7	0-5	SNUB

WCH 3597-WD

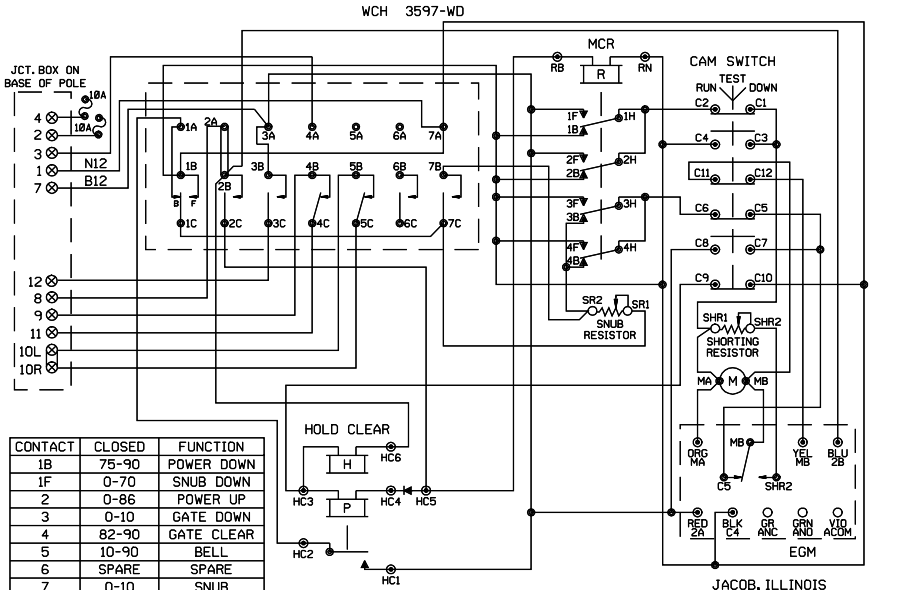

CONTACT	CLOSED	FUNCTION
1B	75-90	POWER DOWN
1F	0-70	SNUB DOWN
2	0-86	POWER UP
3	0-10	GATE DOWN
4	82-90	GATE CLEAR
5	10-90	BELL
6	SPARE	SPARE
7	0-10	SNUB

NEW SHEET

JACOB, ILLINOIS
TR 18
M.P. 76.15
CHESTER SUBDIVISION
D.O.T.#436 216M

SHOW TYPE MECH. INSTALLED

ALL MECHANISMS SHOWN IN THE CLEAR POSITION

JCT. BOX ON BASE POLE

L	R	L	R
1		7	
2		8	
3		9	
4		10	
5		11	
6		12	

1	11-01-06	INSTALL FLASHERS, W/GATES & CWT TR 18 M.P. 76.15 AFE #58749 GRK /SSD/JJF

MODIFICATION LEVEL

Q.A. LAST LEVEL CHECKED	DP
LAST LEVEL MOD THIS TYPICAL	DP
LAST LEVEL BY DESIGNER	DP
CHANGED FROM TYPICAL?	N

REV 02.26.07 4K GWIRING.DGN

UNION PACIFIC
QUALITY PRODUCTIVITY SAFETY
SIGNAL DESIGN

DES: SSD
DIG: SSD
CHK: GRK
A.F.E. 58749
ID= 127507615.6X

UNION PACIFIC RAILROAD

VALLEY JCT. CONN, ILLINOIS TO CHARLESTON JCT., MISSOURI
C.T.C. CIRCUITS

Office of AVP Engineering - Design Omaha, Nebraska

DATE 11-01-06
SHEET 6
DWG 76.15
S-1275

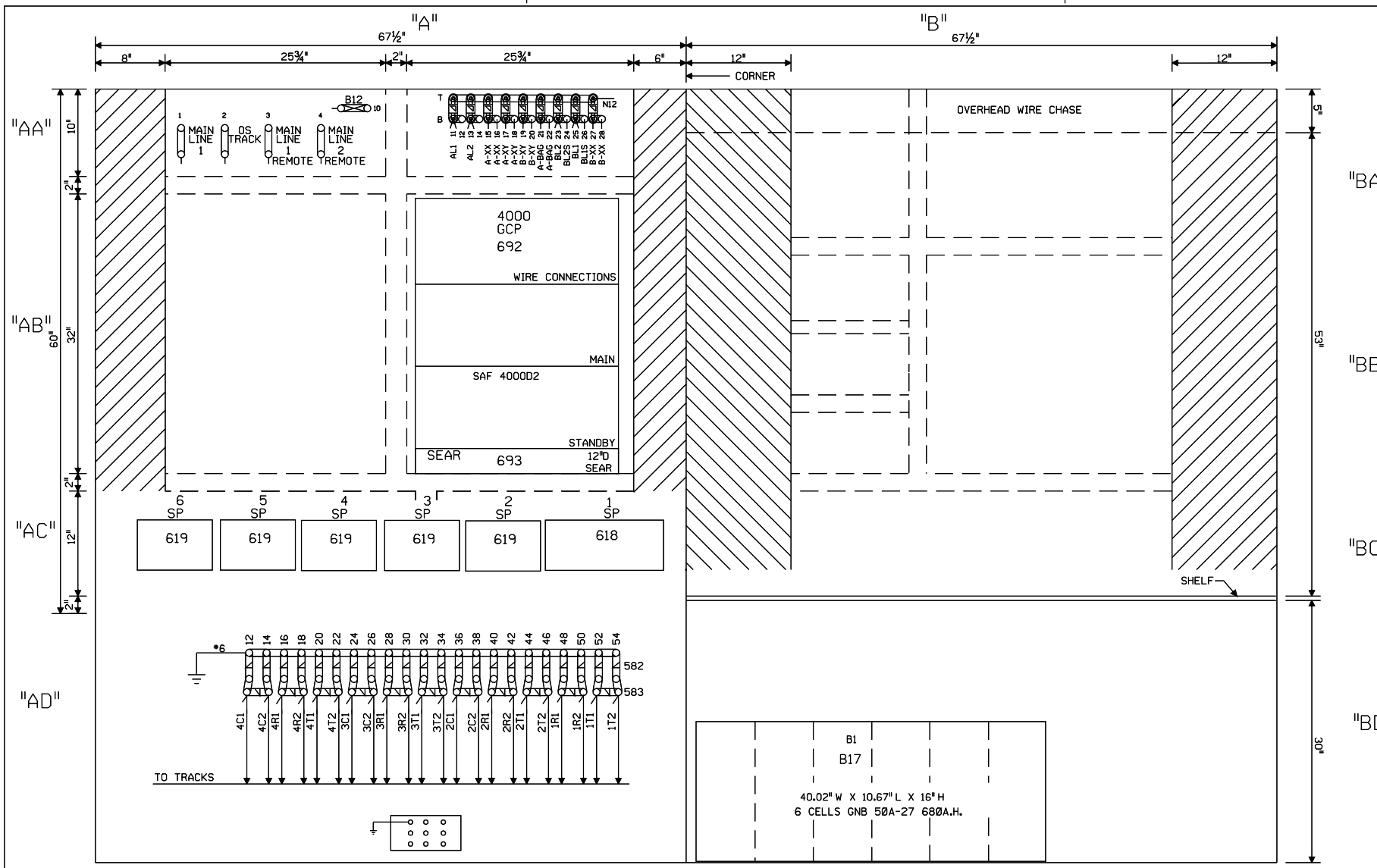

NOTE: ALL DIMENSIONS SHOWN ARE APPROXIMATE.

0 1 2 3 4 FEET

SCALE: 1.5 INCHES = 1 FOOT

NEW SHEET

JACOB, ILLINOIS
TR 18
M.P. 76.15
CHESTER SUBDIVISION
D.O.T.#736 216M

1	11-01-06
INSTALL FLASHERS, W/GATES & CWT	
TR 18	
M.P. 76.15	
AFE #58749	
/	GRK /SSD/JJF

MODIFICATION LEVEL	
O.A. LAST LEVEL CHECKED	DP
LAST LEVEL MOD THIS TYPICAL	DP
LAST LEVEL BY DESIGNER	DP
CHANGED FROM TYPICAL?	Y
rev 02.26.07 4K 4TK4GF.9	

UNION PACIFIC
QUALITY PRODUCTIVITY SAFETY
SIGNAL DESIGN

DES:	SSD
DIG:	SSD
CHK:	GRK
A.F.E.	58749
ID= 127507615.7X	

UNION PACIFIC RAILROAD

VALLEY JCT. CONN, ILLINOIS TO
CHARLESTON JCT., MISSOURI
C.T.C. CIRCUITS

Office of AVP Engineering - Design Omaha, Nebraska

DATE	11-01-06
SHEET	7
DWG	76.15
	S-1275

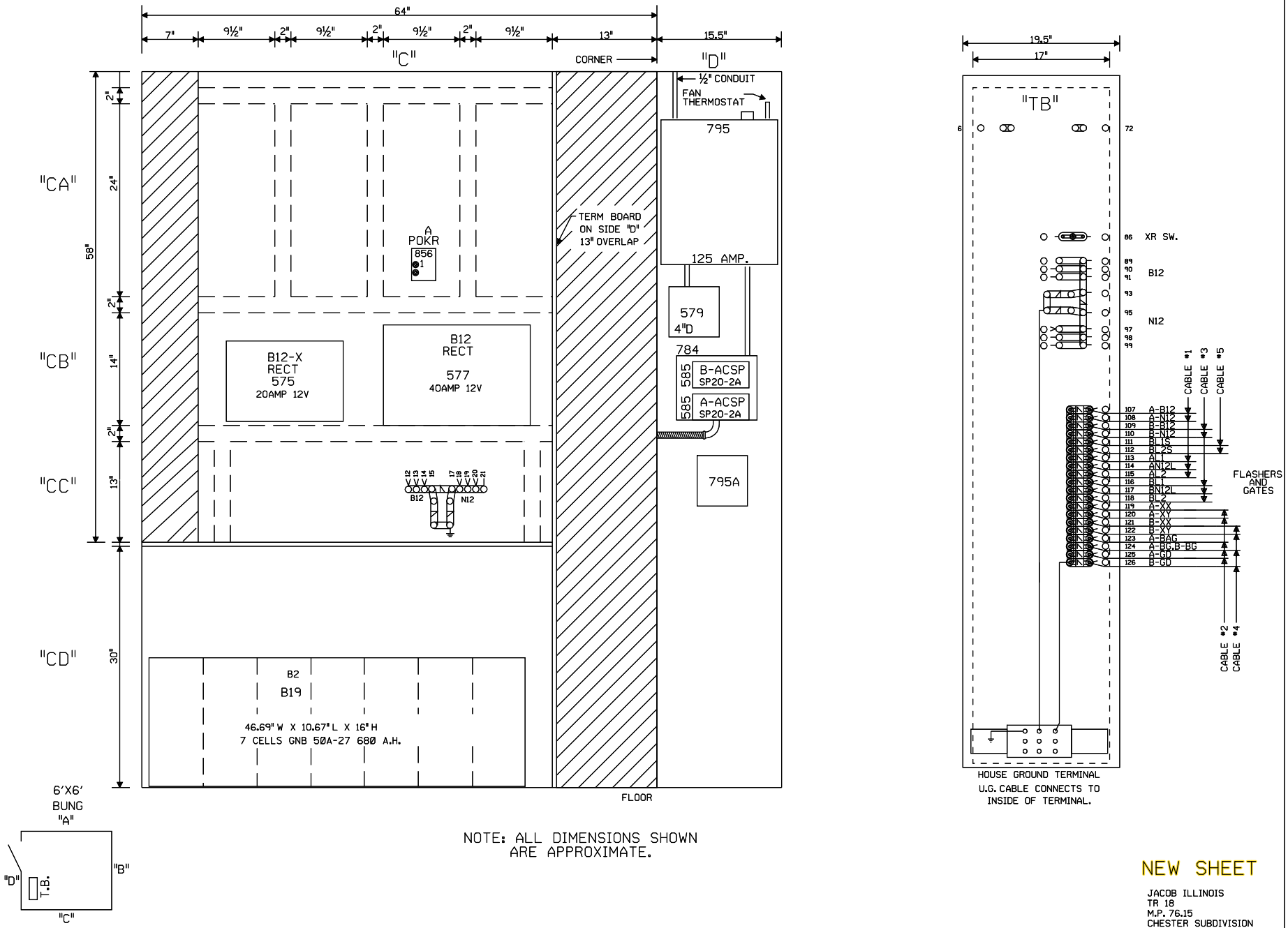

NOTE: ALL DIMENSIONS SHOWN ARE APPROXIMATE.

NEW SHEET

JACOB ILLINOIS
TR 18
M.P. 76.15
CHESTER SUBDIVISION
D.O.T.#736 216M

1 11-01-06 INSTALL FLASHERS, W/GATES & CWT TR 18 M.P. 76.15 AFE #58749 GRK / /SSD/JJF	MODIFICATION LEVEL		UNION PACIFIC SAFETY SIGNAL DESIGN	DES: SSD	UNION PACIFIC RAILROAD	DATE 11-01-06
	Q.A. LAST LEVEL CHECKED	DP		DIG: SSD	VALLEY JCT. CONN, ILLINOIS TO CHARLESTON JCT., MISSOURI	SHEET 8
	LAST LEVEL MOD THIS TYPICAL	DP		CHK: GRK	C.T.C. CIRCUITS	DWG 76.15
	LAST LEVEL BY DESIGNER	DP		A.F.E. 58749	Office of AVP Engineering - Design Omaha, Nebraska	S-1275
	CHANGED FROM TYPICAL? REV 02.26.07 4K 4GF.10	Y		ID= 127507615.8X		

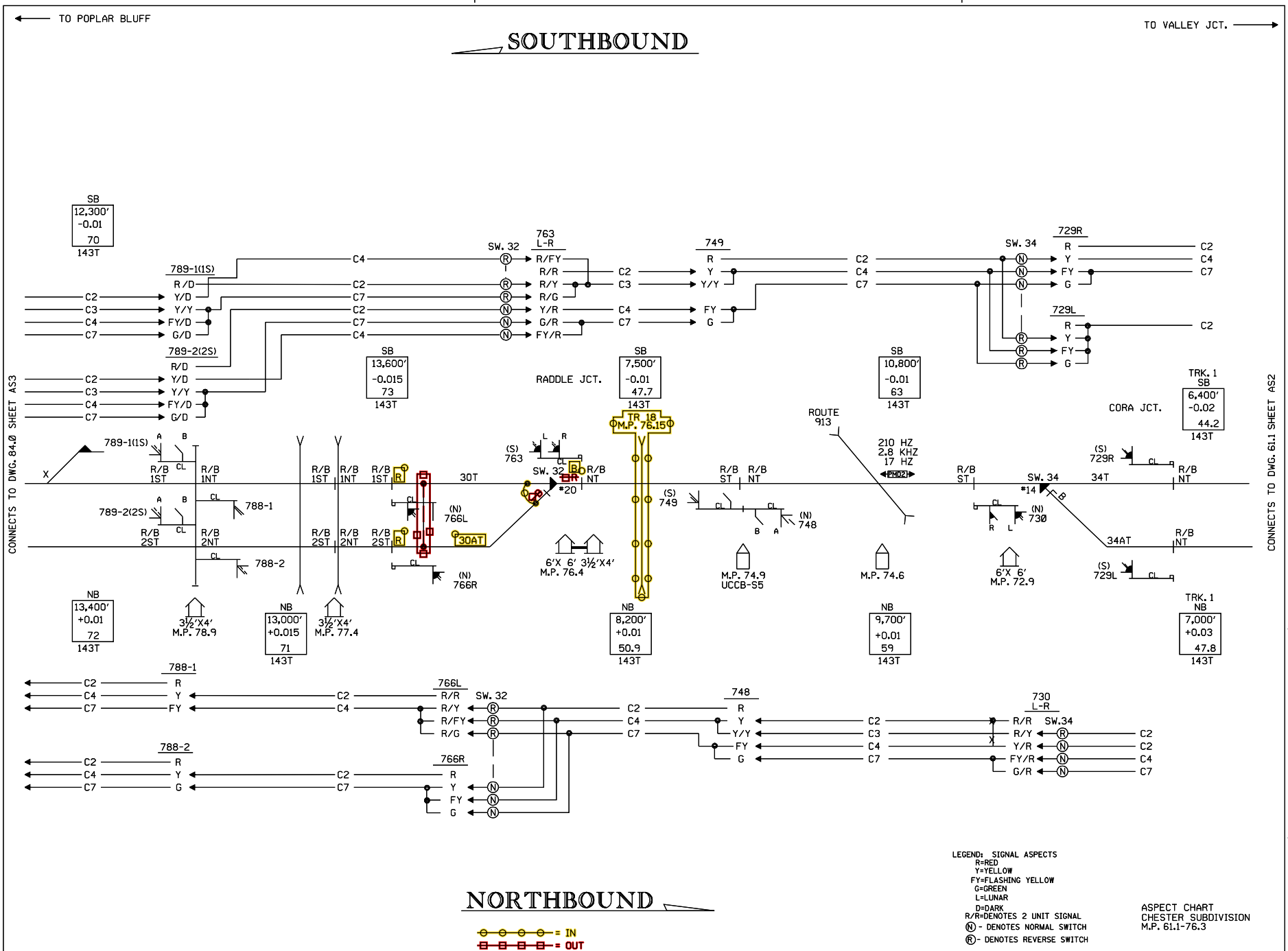
TO POPLAR BLUFF
TO VALLEY JCT.
SOUTHBOUND
CONNECTS TO DWG. 84.0 SHEET AS3
CONNECTS TO DWG. 61.1 SHEET AS2
SB 12,300' -0.01 70 143T
789-1(1S)
789-2(2S)
SW. 32
763 L-R
749
SW. 34
729R
729L
SB 13,600' -0.015 73 143T
RADDLE JCT.
SB 7,500' -0.01 47.7 143T
TR 18 M.P. 76.15
SB 10,800' -0.01 63 143T
ROUTE 913
210 HZ 2.8 KHZ 17 HZ
PMD2
CORA JCT.
TRK. 1 SB 6,400' -0.02 44.2 143T
30T
30AT
(N) 766L
(N) 766R
788-1
788-2
(S) 763
(S) 749
(N) 748
(N) 730
(S) 729R
(S) 729L
34T
34AT
6'X 6' 3½'X4' M.P. 76.4
M.P. 74.9 UCCB-S5
M.P. 74.6
6'X 6' M.P. 72.9
NB 13,400' +0.01 72 143T
3½'X4' M.P. 78.9
NB 13,000' +0.015 71 143T
3½'X4' M.P. 77.4
NB 8,200' +0.01 50.9 143T
NB 9,700' +0.01 59 143T
TRK. 1 NB 7,000' +0.03 47.8 143T
766L
766R
748
730
NORTHBOUND
= IN
= OUT
LEGEND: SIGNAL ASPECTS
R=RED
Y=YELLOW
FY=FLASHING YELLOW
G=GREEN
L=LUNAR
D=DARK
R/R=DENOTES 2 UNIT SIGNAL
N - DENOTES NORMAL SWITCH
R - DENOTES REVERSE SWITCH
ASPECT CHART
CHESTER SUBDIVISION
M.P. 61.1-76.3
3 11-01-06 INSTALL FLASHERS, W/GATES & CWT TR 18 M.P. 76.15 AFE #58749 JTB /SSD/RDD
REV. 3-6-00 INSTALLED NEW SIDING AT M.P. 71.69 W.O.#31005 1-10-00 RLL TT/WITT/JM
REV. 5-31-96 70 MPH, SPEED INCREASE M.P. 76.3 TO M.P. 84.7 3-12-96 CDL RAC/WITT/JM/GSP
UNION PACIFIC
QUALITY PRODUCTIVITY SAFETY
SIGNAL DESIGN
DES: CGB
DIG: CGB
CHK: RCB
A.F.E. 16574
ID= 127506110.AS3
UNION PACIFIC RAILROAD
VALLEY JCT., ILL. TO
POPLAR BLUFF, MO.
C.T.C. CIRCUITS
OFFICE OF CHIEF ENG'R SIGNALS
OMAHA NEBR.
DATE 12-21-94
SHEET AS3
DWG 61.1
S-1275-M