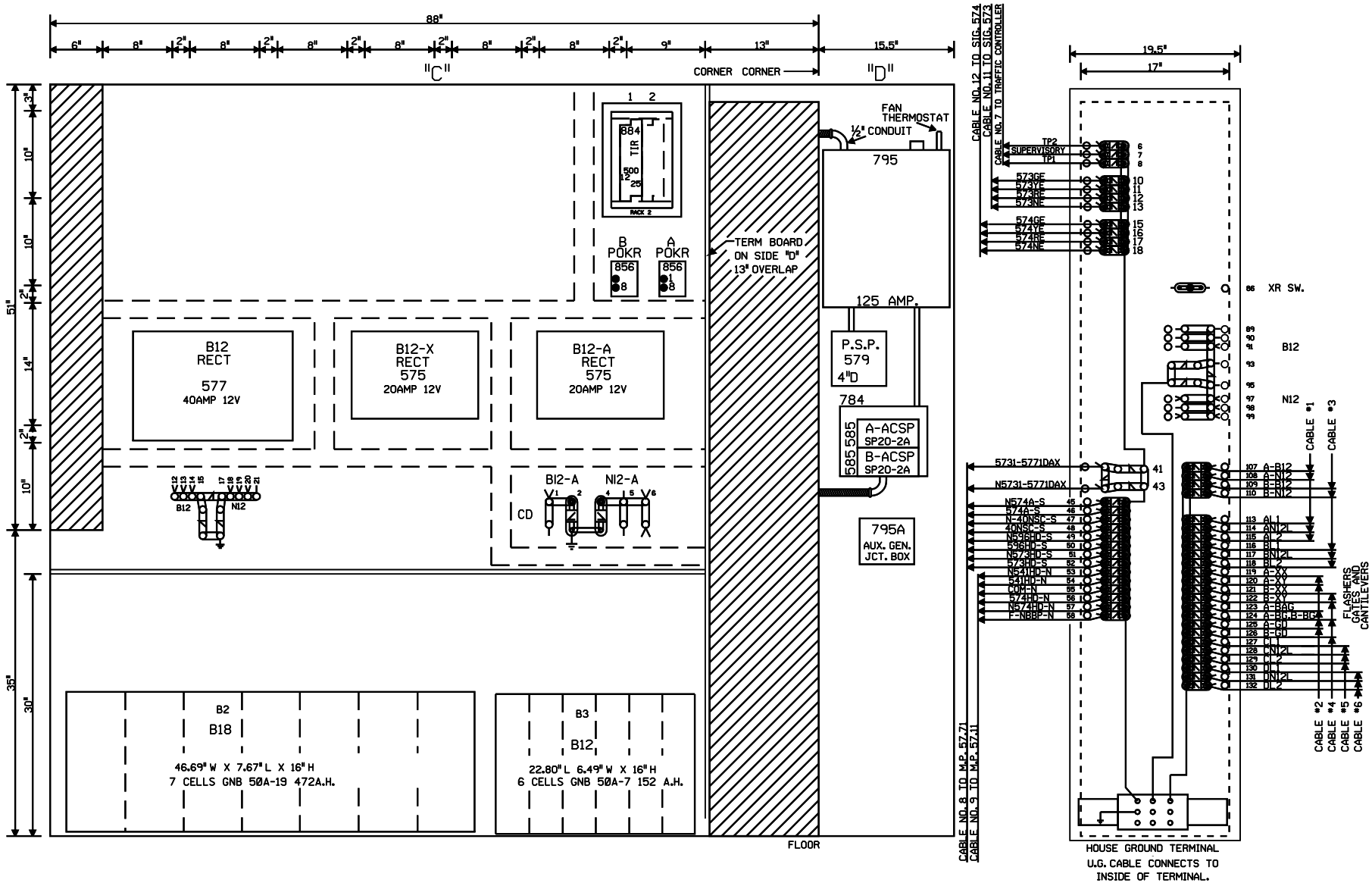

NOTE: ALL DIMENSIONS SHOWN
ARE APPROXIMATE.

0 1 2 3 4 FEET

SCALE: 1.5 INCHES = 1 FOOT

BRAIDWOOD, ILLINOIS
MAIN STREET
M.P. 57.31
JOLIET SUBDIVISION
D.O.T.#290 506L

NEW SHEET

08-20-07
INSTALL FLASHERS
GATES AND CANTS
WITH CWT AT
M.P. 57.31
AFE 83889 CJB
SSC/JJF

MODIFICATION LEVEL	
Q.A. LAST LEVEL CHK'D.	DD
LAST LEVEL MOD. THIS TYP.	DB
LAST LEVEL BY DESIGNER.	DQ
CHANGED FROM TYP.? Y/N	Y

UNION PACIFIC
QUALITY PRODUCTIVITY SAFETY
SIGNAL DESIGN

DES: SSC
DIG: SSC
CHK: CJB
A.F.E. 83889
ID= CSL5731.11X

UNION PACIFIC RAILROAD
JOLIET, ILLINOIS TO
BLOOMINGTON, ILLINOIS
A.B.S. CIRCUITS
Office of Sr.AVP Engineering - Signal/TCO Omaha, Nebraska

DATE 08-20-07
SHEET 11
DWG 57.31
CSL RTE

(REV. 01.02.21) (CD6X8HSE.TYP)

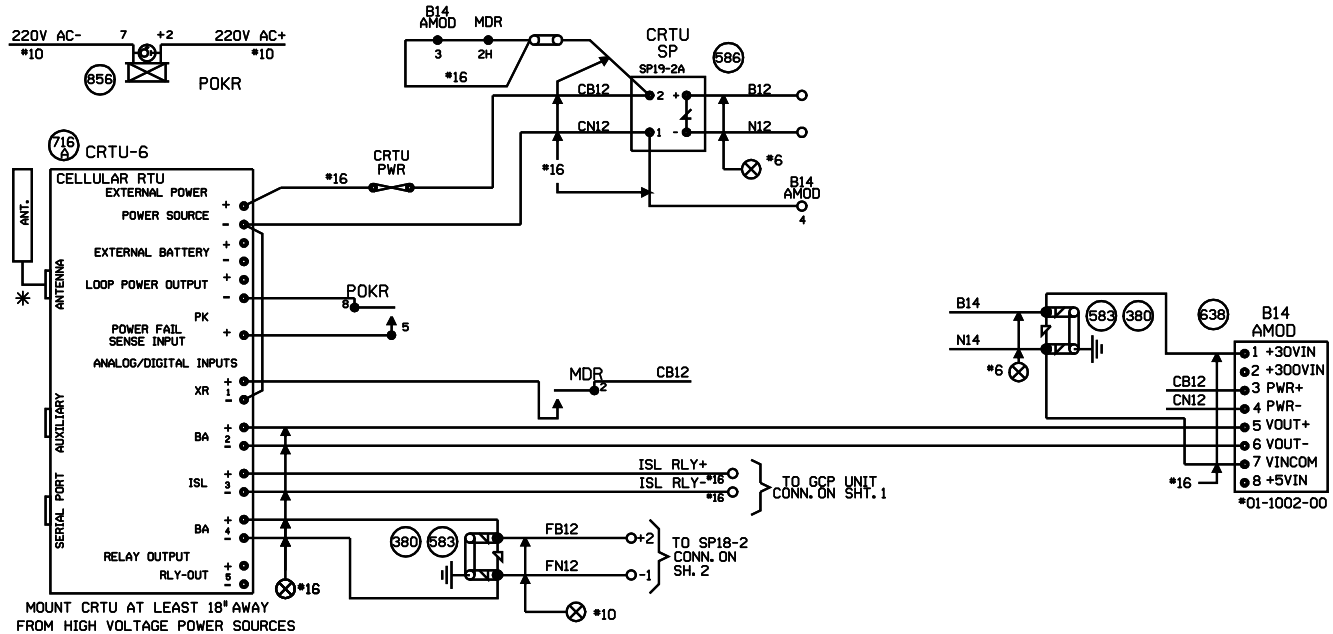

NOTES:

ALL DIODES 1N5060 OR 1N4004 UNLESS OTHERWISE NOTED.
✳ MOUNT ANTENNA ON TOP OF HOUSE.
ALL WIRES #18 UNLESS OTHERWISE NOTED.
ALL UNUSED 'NC' INPUTS MUST BE TIED HIGH TO BATTERY
ALL UNUSED ANALOG INPUTS MUST BE TIED HIGH TO BATTERY
ALL UNUSED 'NO' INPUTS MUST BE DISCONNECTED
NORMAL STATE FOR ANALOG CHANNELS IS EQUAL TO THE STORED NOMINAL VOLTAGE +120% OR -81%
CRTU FRONT PANEL DISPLAY CHART INDICATES NORMAL STATE

■ DIGITAL INPUT HIGH, OR POWER FAIL INPUT CLOSED
□ DIGITAL INPUT LOW, OR POWER FAIL INPUT OPEN

□ L ← LATCH IS SET BECAUSE CRTU DETECTED AN ALARM CONDITION
12.06V L

'sRUN MODE' 'sRUN MODE-SILENT'
CRTU RADIO IS DISABLED. REPROGRAM CRTU WITH LAPTOP.

MEASURE NOMINAL VOLTAGE ON ANALOG INPUT MODULE BETWEEN 1 +30VIN AND 7 VINCOM

ANALOG AND AC INPUT MODULES MUST BE MOUNTED LESS THAN 12" FROM CRTU

ANALOG MODULES CONVERT DC VOLTAGE TO A SQUARE WAVE. A WORKING ANALOG MODULE WILL HAVE 4.5VDC TO 8.0VDC BETWEEN 5VOUT+ AND 6VOUT-. WHERE, 0VOLTS = 0HZ OUT, 3OVOLTS = 10KHZ OUT, AND 15VOLTS = 5KHZ OUT
MAKE SURE CRTU IS PROGRAMMED WITH CALIBRATION SETTINGS.

UNIT INSTALLATION AND SETUP

R.R. SITE ID WHERE; SSSS = 4 CHARACTER SUBDIVISION ID. FILL WITH PRECEDING ZEROS AS REQUIRED. THE MAIN TRACK SUBDIVISION ID* IS IN THE CURRENT TIMETABLE. INDUSTRIAL LEADS, LEASED, AND LEAD TRACKS LISTED WITHIN THE SUBDIVISION MAY HAVE THEIR OWN UNIQUE SUBDIVISION ID*. DO NOT AUTOMATICALLY USE THE MAIN TRACK SUBDIVISION ID* FOR THESE OTHER TRACKS. ALWAYS DOUBLE CHECK WITH THE MOST CURRENT PRINTED COPY OF THE TIMETABLE.
LLLLLLLLL = 8 CHARACTERS USE DOT* AT CROSSINGS, AND USE MP* AT WAYSIDE AND HBD SITES. FILL WITH PRECEDING DASHES AS REQUIRED.
THE MP* MUST USE A DECIMAL POINT TO SEPARATE NUMBERS.
AA = 2 CHARACTER STATE NAME FOR CROSSINGS.
AA = 'WD' FOR WAYSIDE LOCATIONS, AA = 'HB' FOR HBD SITES.
MUST BE 14 CHARACTERS LONG, NO SPACES ALLOWED.

SITE IDENTIFIER: SSSSLLLLLLLLAA	0025-290506LIL
SIGNAL STRENGTH dBm	
CARRIER ID	
FIRMWARE VERSION	2.3.06
SERIAL NUMBER	
CONFIGURATION NET	MICROBURST
SIGNAL STATUS	
SCADANET STATUS	
SILENCE INTERVAL	60 MINUTES
HEALTHCHECK INTERVAL	EVERY 2 DAYS
ALARM DEFER DELAY	240 MINUTES (4 HOURS)
OPERATION TO RESUME: RUN	
CALIBRATION CONSTANT	
CH2	
CH4	
POWER SOURCE	

FIELD PROVIDES: SAMPLED NOMINAL VOLTAGES, SCADANET STATUS CALIBRATION CONSTANTS, SERIAL NUMBER, AND SIGNAL STATUS.

CHANNEL SETUP - STANDARD CONFIGURATION 14:XR,BA,ISL,BA

CHANNEL NORMAL STATE	SENSE (NO/NC)	NAME FUNCTION	RECOGNITION DELAY SECONDS ACTIVE	RECOGNITION DELAY SECONDS NORMAL	RETURN TO NORMAL	REPORTING MODE	ALARM LINKED CHANNEL	ALARM LINKED CRITERIA	EVENT LOGGING ENABLED OPTIONS
POWER FAIL (CH5) ■	POWER FAIL DETECT NO	PF1n-PK AC POWER FAIL	7,200 ALARM	300 NORMAL	ENABLED	ALERT	DISABLED	N/A	
CH1 □	DIGITAL INPUT NO	CH1-XR XR DOWN TO LONG	1,800 ALARM	1 NORMAL	ENABLED	ALERT	DISABLED	N/A	
CH2 STORED NOMINAL VOLTAGE	ANALOG INPUT N/A	CH2-BA/V BATTERY MONITOR BATTERY LOW	300 ALARM	300 NORMAL	DISABLED	ALERT W/UPDATE	DISABLED	N/A	
CH3 ■	DIGITAL INPUT NC	CH3-ISL ISLAND OCCUPIED DAX, PREEMPT WARNING TIME	1 ACTIVE	1 NORMAL	DISABLED	STATUS ONLY	DISABLED	N/A	DIGITAL EVENTS
CH4 STORED NOMINAL VOLTAGE	ANALOG INPUT N/A	CH4-BA/V BATTERY MONITOR BATTERY LOW	300 ALARM	300 NORMAL	DISABLED	ALERT W/UPDATE	DISABLED	N/A	CH1-XR CH3-ISL
POWER SOURCE (CH6)	ANALOG INPUT N/A	PS-BA/V BATTERY MONITOR BATTERY LOW	300 ALARM	300 NORMAL	DISABLED	ALERT W/UPDATE	DISABLED	N/A	

ANALOG CHANNEL	USEFUL RANGE VOLTS LOW	USEFUL RANGE VOLTS HIGH	DISPLAYED RANGE VOLTS LOW	DISPLAYED RANGE VOLTS HIGH	RELATIVE ALARM POINT LOW	RELATIVE ALARM POINT HIGH	ABSOLUTE ALARM POINT LOW	ABSOLUTE ALARM POINT HIGH	AUTOMATIC UPDATE INTERVAL	STORED NOMINAL VOLTAGE	SAMPLED NOMINAL VOLTAGE
CH2	0.0	30.00	0.0	30.00	81%	120%	10.0	28.0	10 DAYS	12.69	
CH4	0.0	30.00	0.0	30.00	81%	120%	10.0	28.0	10 DAYS	12.69	
POWER SOURCE	0.0	30.00	0.0	30.00	81%	120%	10.0	28.0	10 DAYS	12.69	
RELAY OUTPUT	NAME RLY-OUT		ACTIVE SET-UP-OPEN		NORMAL CLR-DN-CLOSE		PULSE DURATION		15 SECONDS	CHARTS REV'D 3-2-01	

MAINTENANCE OPERATIONS

TO START OR ABORT ANY PROCEDURE
1. PRESS THE 'CANCEL' BUTTON FIRST

WHEN RESPONDING TO A CALL, PUT THE CRTU IN THE 'SILENCE ALARMS' MODE

1. PRESS 'SELECT' AND THEN '+ ARROW' BUTTON UNTIL
   DISPLAY: ACTION?
   SILENCE ALARMS
2. PRESS THE 'SELECT' BUTTON TWICE
3. CORRECT PROBLEM AND SIMULATE NORMAL TRAIN MOVEMENT THROUGH THE LOCATION
4. EXAMINE EACH CHANNEL ON THE CRTU
5. PRESS THE '+/- ARROW' BUTTON
   VERIFY ALL CHANNELS INDICATE A NORMAL STATE
   NORMAL STATES ARE ON THE CHANNEL SETUP CHART

CLEAR TIMERS, LATCHES AND SEND ALL NORMAL

1. DO STEPS #1 - #5 ABOVE, AND PRESS 'CANCEL'.
2. PRESS 'SELECT' AND THEN '- ARROW' BUTTON UNTIL
   DISPLAY: ACTION?
   SERVICE MODE
3. PRESS 'SELECT' AGAIN TO RESET TIMERS, AND IF
   DISPLAY: SERVICE MODE
   ALL NORMAL
4. PRESS 'SELECT' AGAIN TO CLEAR LATCHES, AND SEND ALL NORMAL. SKIP STEPS #5-#6.
5. HOWEVER, IF ALARMS ARE NOT CLEARED;
   DISPLAY: SERVICE MODE
   ALARMS PENDING/PRESENT
6. PRESS 'CANCEL', CORRECT PROBLEM AND REPEAT STEPS #2 THRU #5 UNTIL ALL NORMAL SENT.

TO CANCEL THE 'SILENCE ALARMS' MODE

1. PRESS 'SELECT' AND THEN '+ ARROW' BUTTON UNTIL
   DISPLAY: ACTION?
   CANCEL SILENCE
2. PRESS THE 'SELECT' BUTTON AGAIN

EXAMINE & SET BATTERY VOLTAGE NOMINAL VALUE

1. PRESS THE '+ ARROW' OR '- ARROW' BUTTON UNTIL THE DESIRED CHANNEL IS DISPLAYED.
   DISPLAY: PS-BA:
   13.83V NORMAL
2. VERIFY THE DISPLAYED READING WITH A DIGITAL VOLTMETER
3. PRESS THE 'SELECT' BUTTON, AND THE CRTU DISPLAY WILL SWITCH BETWEEN CURRENT/SAVED NOMINAL VOLTAGE VALUES.
   DISPLAY: NOMINAL ON #6? (CURRENT)
   13.83
   DISPLAY: SAVED NOMINAL 6 (STORED)
   12.69
4. PRESS THE 'SELECT' BUTTON AND THE CURRENT OR 'NOMINAL ON' VALUE WILL BE SAMPLED AND STORED AS THE 'SAVED NOMINAL' VALUE
5. VERIFY THE 'NOMINAL ON' AND 'SAVED NOMINAL' VALUES ARE EQUIVALENT, REPEAT STEPS #1 THRU #3 & PRESS THE 'CANCEL' BUTTON.

TO BE VOIDED
WO 83889 08-20-07

BRAIDWOOD, ILLINOIS
MAIN ST.
M.P. 57.31
JOLIET SUB.
D.O.T.#290 506L

1 REV. 03-02-05 INSTALL CRTU AND REPLACED GCP 600 W/HXP3R2 PER AC. WO#3327 REC. #12439 01-26-05 JPF/NST/NST/EML	MODIFICATION LEVEL		UNION PACIFIC SIGNAL DESIGN	DES: NST DIG: NST CHK: A.F.E. 3327 ID= CSL5731.1AX	UNION PACIFIC RAILROAD JOLIET, ILLINOIS TO BLOOMINGTON, ILLINOIS ABS CIRCUITS OFFICE OF CHIEF ENG'R OMAHA NEBR.	DATE 8-15-01 SHEET 1A DWG 57.31 CSL-RTE
	Q.A. LAST LEVEL CHK'D.					
	LAST LEVEL MOD. THIS TYP.					
	LAST LEVEL BY DESIGNER.					
	CHANGED FROM TYP.? Y/N					

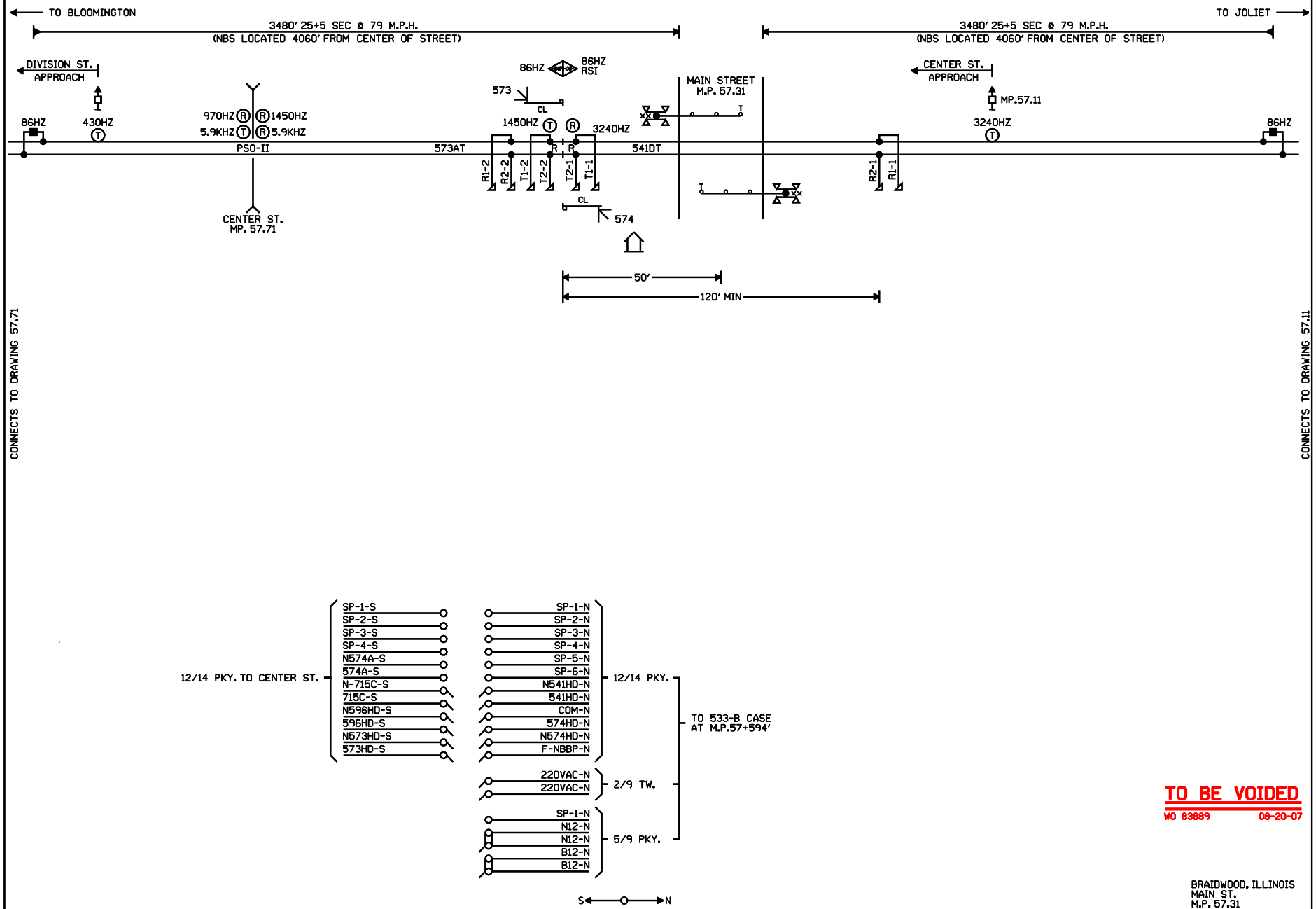

TO BE VOIDED

WO 83889 08-20-07

BRAIDWOOD, ILLINOIS
MAIN ST.
M.P. 57.31
JOLIET SUB.
D.O.T.#290 506L

				REV. 1-24-06 ADDED APPROACH DETAIL & CHANGED MILEPOST PER SUBDIVISION REVIEW REC# 13692 WITT/RCB	1 REV. 03-02-05 INSTALL CRTU AND REPLACED GCP 600 W/HXP3R2 PER AC. WO#3327 REC. #12439 01-26-05 JPF/NST/NST/EML	MODIFICATION LEVEL Q.A. LAST LEVEL CHK'D. CY LAST LEVEL MOD. THIS TYP. CK LAST LEVEL BY DESIGNER. 00 CHANGED FROM TYP.? Y/N	UNION PACIFIC QUALITY PRODUCTIVITY SAFETY SIGNAL DESIGN	DES: DIG: NST CHK: A.F.E. ID= CSL5731.1X	UNION PACIFIC RAILROAD JOLIET, ILLINOIS TO BLOOOMINGTON, ILLINOIS ABS CIRCUITS OFFICE OF CHIEF ENG'R OMAHA NEBR.	DATE 03-02-05 SHEET 1 DWG 57.31 CSL-RTE

(REV. 4-4-00) (CIRCUIT.TYP)

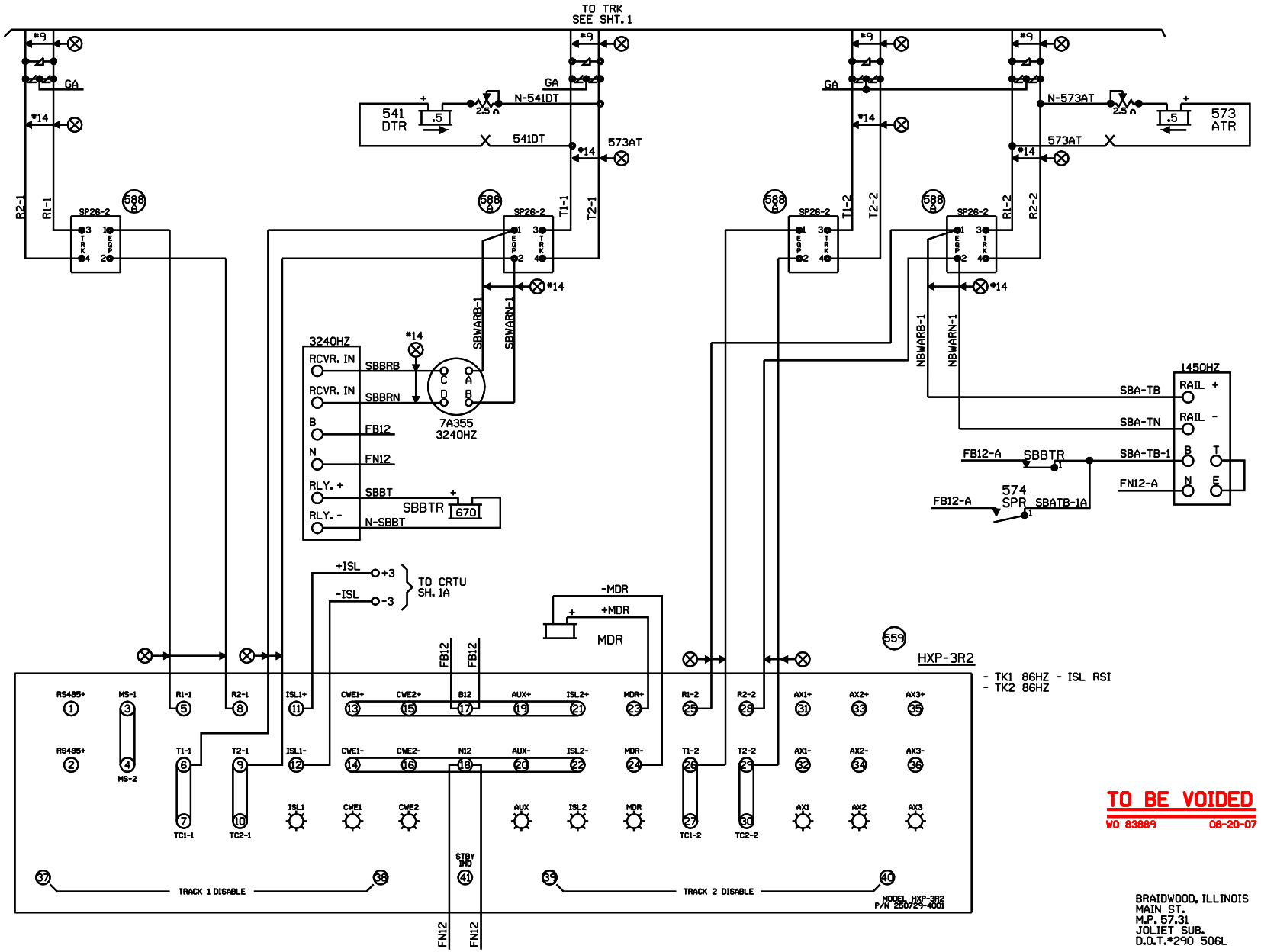

TO BE VOIDED
WO 83889 08-20-07

BRAIDWOOD, ILLINOIS
MAIN ST.
M.P. 57.31
JOLIET SUB.
D.O.T.#290 506L

REV. 1-24-06 ADDED APPROACH DETAIL & CHANGED MILEPOST PER SUBDIVISION REVIEW REC# 13692 WITT/RCB	1 REV. 03-02-05 INSTALL CRTU AND REPLACED GCP 600 W/HXP3R2 PER AC. WO#3327 REC. #12439 01-26-05 JPF/NST/NST/EML	MODIFICATION LEVEL	
		Q.A. LAST LEVEL CHK'D.	CY
		LAST LEVEL MOD. THIS TYP.	CK
		LAST LEVEL BY DESIGNER.	00
		CHANGED FROM TYP.? Y/N	

UNION PACIFIC
QUALITY PRODUCTIVITY SAFETY
SIGNAL DESIGN

DES:
DIG: NST
CHK:
A.F.E.
ID= CSL5731.2X

UNION PACIFIC RAILROAD
JOLIET, ILLINOIS TO
BLOOMINGTON, ILLINOIS
ABS CIRCUITS
OFFICE OF CHIEF ENG'R OMAHA NEBR.

DATE 03-02-05
SHEET 2
DWG 57.31
CSL-RTE

(REV. 4-4-00) (CIRCUIT.TYP)

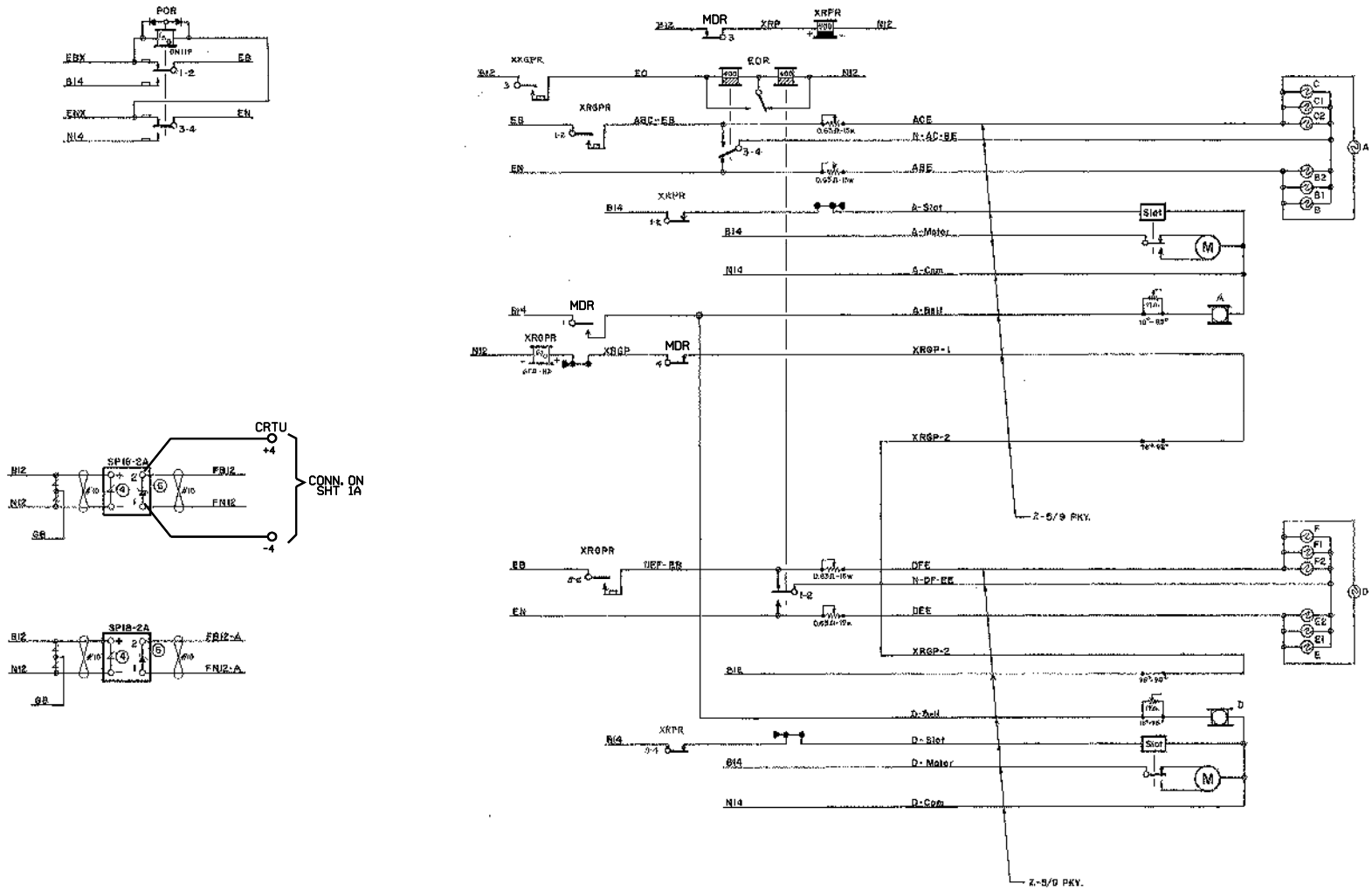

TO BE VOIDED

WO 83889 08-20-07

BRAIDWOOD, ILLINOIS
MAIN ST.
M.P. 57.31
JOLIET SUB.
D.O.T.#290 506L

TIF FILE ATTACHED TIF ID = CSL5731.3X.TIF

							REV. 1-24-06 ADDED APPROACH DETAIL & CHANGED MILEPOST PER SUBDIVISION REVIEW WITT/RCB	UNION PACIFIC QUALITY PRODUCTIVITY SAFETY SIGNAL DESIGN	DES: DIG: WITT CHK: A.F.E. ID= CSL5731.3X	UNION PACIFIC RAILROAD JOLIET, ILLINOIS TO BLOOMINGTON, ILLINOIS ABS CIRCUITS OFFICE OF CHIEF ENG'R SIGNALS OMAHA NEBR.	DATE 1-24-06 SHEET 3 DWG 57.31 CSL-RTE

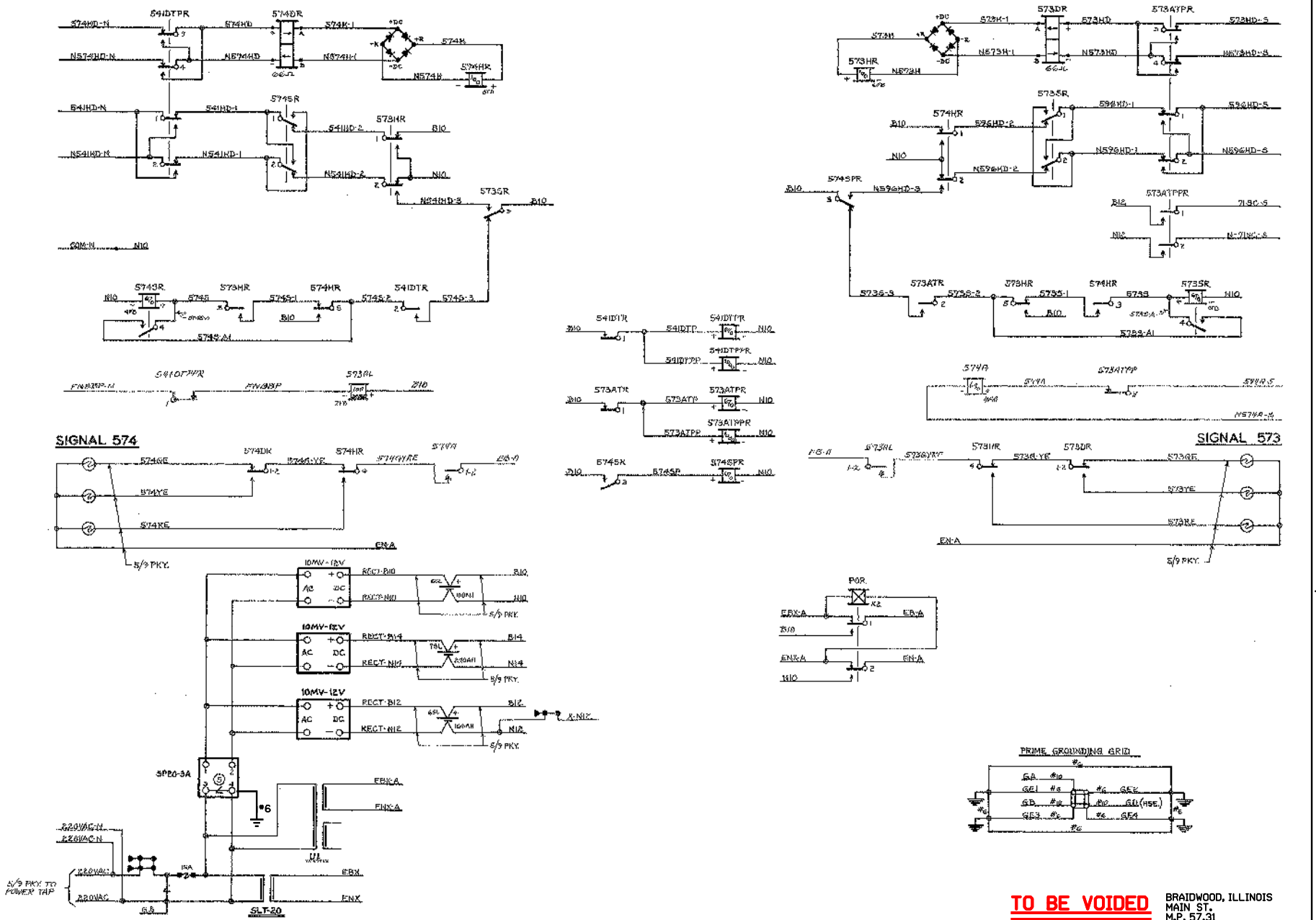

TO BE VOIDED

WO 83889 08-20-07

BRAIDWOOD, ILLINOIS
MAIN ST.
M.P. 57.31
JOLIET SUB.
D.O.T.#290 506L

TIF FILE ATTACHED TIF ID = CSL5731.4X.TIF

REV. 1-24-06 ADDED APPROACH DETAIL & CHANGED MILEPOST PER SUBDIVISION REVIEW WITT/RCB	UNION PACIFIC QUALITY PRODUCTIVITY SAFETY SIGNAL DESIGN	DES: DIG: WITT CHK: A.F.E. ID= CSL5731.4X	UNION PACIFIC RAILROAD JOLIET, ILLINOIS TO BLOOMINGTON, ILLINOIS ABS CIRCUITS OFFICE OF CHIEF ENG'R SIGNALS OMAHA NEBR.	DATE 1-24-06 SHEET 4 DWG 57.31 CSL-RTE		

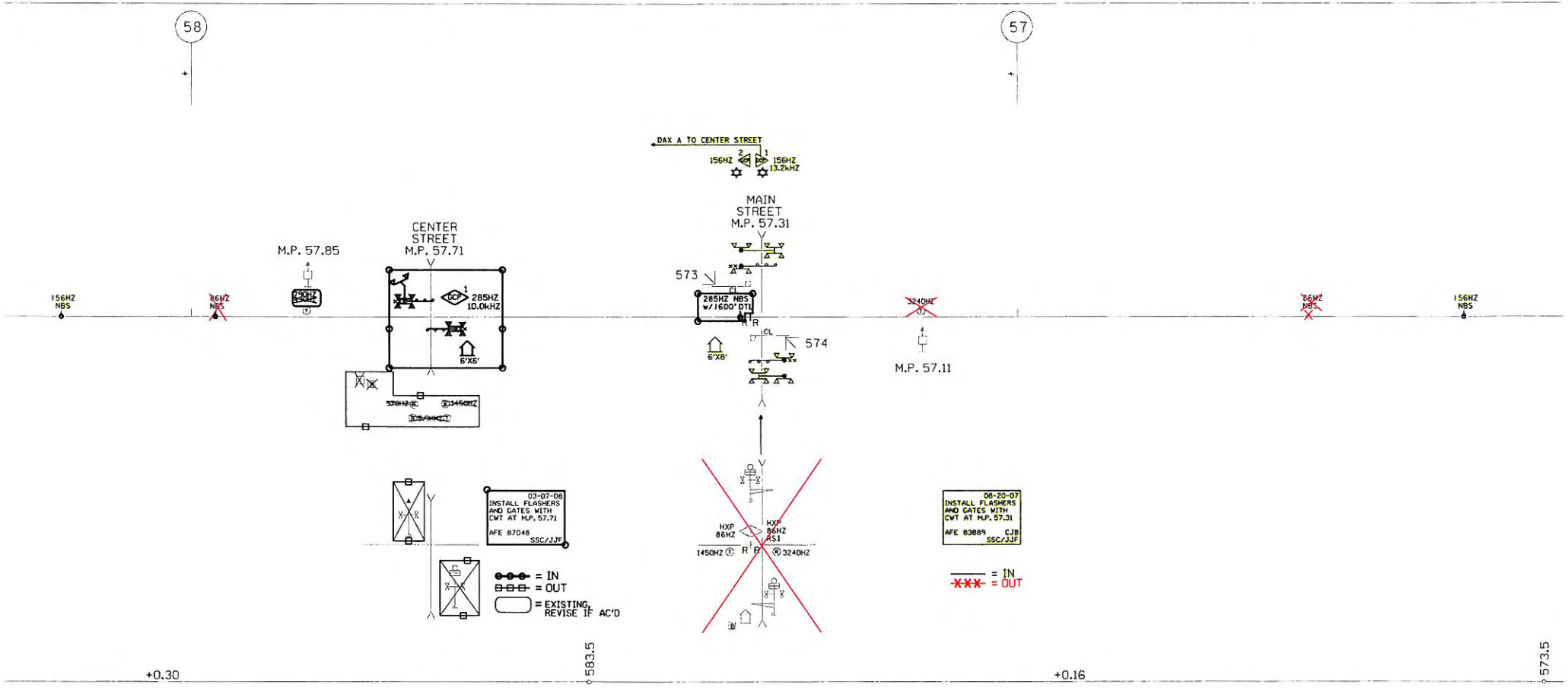
58
57
DAX A TO CENTER STREET
156HZ
156HZ
13.2kHZ
MAIN
STREET
M.P. 57.31
CENTER
STREET
M.P. 57.71
M.P. 57.85
156HZ
NBS
86HZ
NBS
285HZ
10.0kHZ
6'X6'
573
285HZ NBS
w/1600' DTL
574
6'X8'
3240HZ
M.P. 57.11
86HZ
NBS
156HZ
NBS
03-07-08
INSTALL FLASHERS
AND GATES WITH
CWT AT M.P. 57.71
AFE 87048
SSC/JJF
HXP
86HZ
HXP
86HZ
RS1
1450HZ
3240HZ
08-20-07
INSTALL FLASHERS
AND GATES WITH
CWT AT M.P. 57.31
AFE 83889
CJB
SSC/JJF
= IN
= OUT
= EXISTING
REVISE IF AC'D
= IN
= OUT
+0.30
583.5
+0.16
573.5

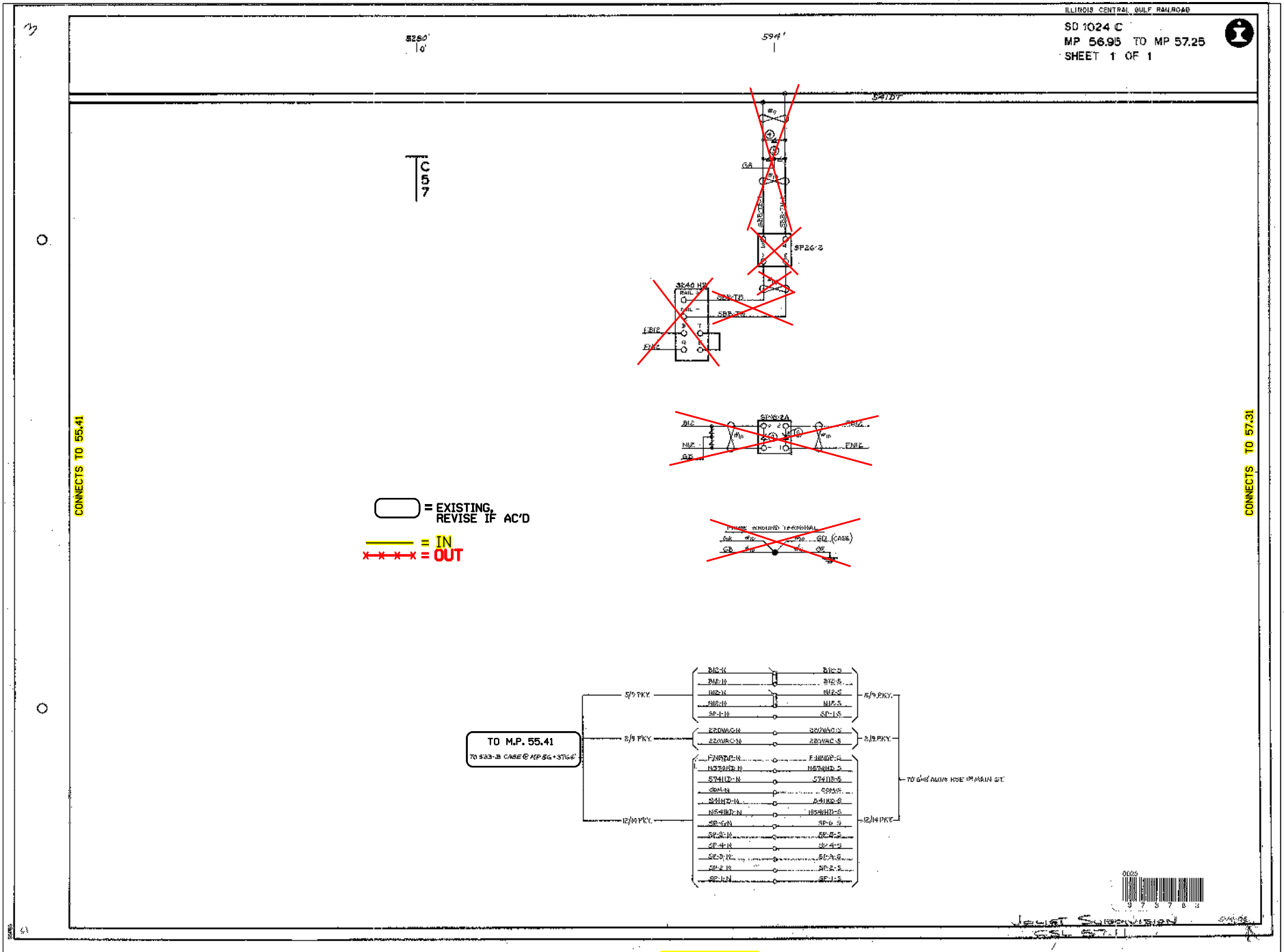

TIF FILE ATTACHED TIF ID = CSL5711.1X.VOID.TIF.

08-20-07 INSTALL FLASHERS GATES AND CANTS WITH CWT AT M.P. 57.31 AFE 83889 CJB SSC/JJF	UNION PACIFIC QUALITY PRODUCTIVITY SAFETY SIGNAL DESIGN	DES: SSC DIG: SSC CHK: A.F.E. 83889 ID= CSL5711.1X	UNION PACIFIC RAILROAD JOLIET, ILLINOIS TO BLOOMINGTON, ILLINOIS A.B.S. CIRCUITS Office of Sr.AVP Engineering - Signal/TCO Omaha, Nebraska	DATE 08-20-07 SHEET 1 DWG 57.11 CSL RTE		

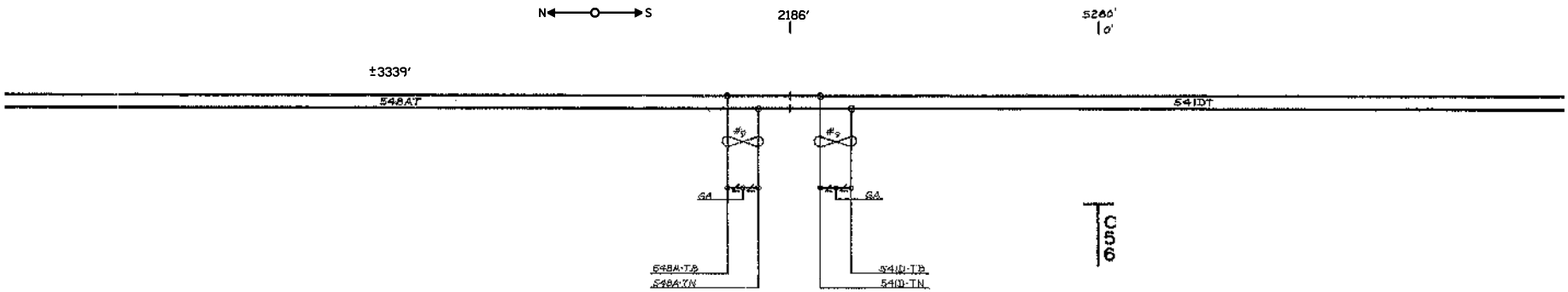

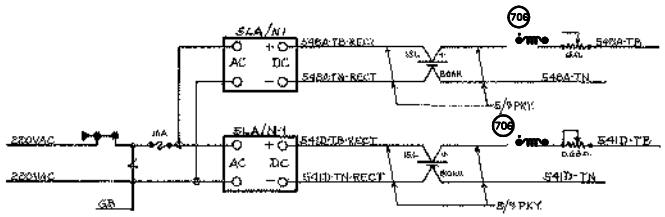

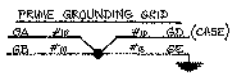

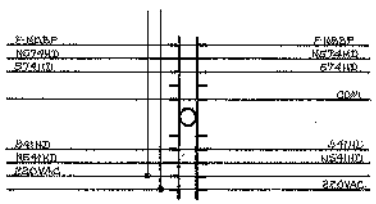

CONNECTS TO DWG. 54.85

CONNECTS TO DWG. 57.11

WILMINGTON, ILLINOIS
CUT SECTION
JOILET SUBDIVISION
M.P.55.41

TIF FILE ATTACHED TIF ID = CSL5541.1S.TIF

REV. 1-13-06 INSTALL FLS/GATES AT COAL CITY ROAD M.P.54.85 REC#13557 10-6-05 JTB RS/WITT/CTC/JNM	UNION PACIFIC QUALITY PRODUCTIVITY SAFETY SIGNAL DESIGN	DES: DIG: WITT CHK: A.F.E. 44358 ID= CSL5541.1S	UNION PACIFIC RAILROAD JOLIET, ILLINOIS TO BLOOMINGTON, ILLINOIS ABS CIRCUITS OFFICE OF CHIEF ENG'R SIGNALS OMAHA NEBR.	DATE 1-13-06 SHEET 1 DWG 55.41 CSL-RTE		