RECEIVED
NOV 5 2008
Illinois Commerce Commission
RAIL SAFETY SECTION

IN SERVICE _____ SIGNED _____ DATE
☐ S&E ENGINEERING COPY
☐ CONSTRUCTION OFFICE COPY
RETURN TO S&E ENG. AFTER COMPLETION
☐ FIELD COPY
RETURN TO CASE AFTER COMPLETION
☐ PROJECT ENGINEER COPY

R-1966
RED = IN
YELLOW = OUT

08/04/05
DESIGNED BY CNB
CHECKED BY CWW

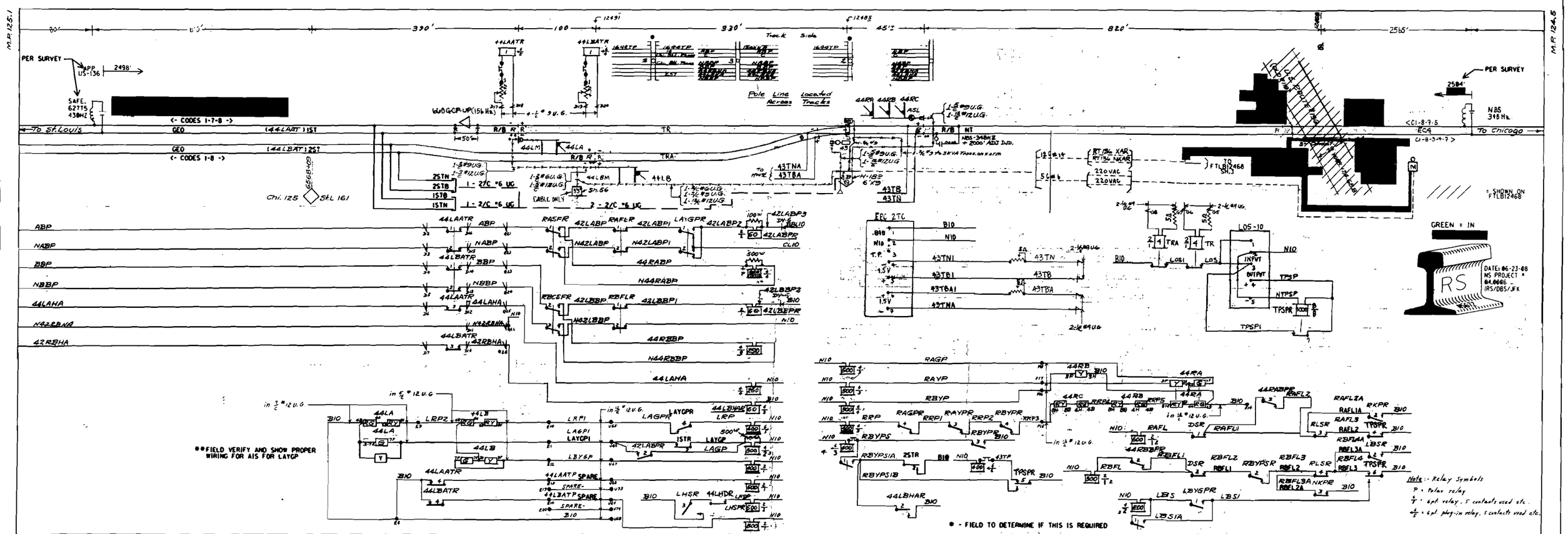

Revision		7 8-12-03	6 7-26-90	5 3-26-84	4 3-26-81	3 8-29-78	2 12-29-70	1 6-10-58	A.F.E. 7420	WABASH R.R.	S. & C. DEPT	DECATUR, ILL.
Reference			R-9119	R-6260	BUL 91850	File: 3280.1	AFE 1PA 26	AFE 7420				
	NST 08-04-05	INSTALL DATA RADIO	IRAD BC4 TO GIBSON CITY	INSTALL GCP	REMOVE INTERLOCKING	Treatment of push button Remote	Sel Meters NY Sends of Osman	Revised to show actual case wiring	Drawn CED	OSMAN, ILLINOIS NORTH END TRACK AND CIRCUIT DIAGRAM		
By		BEL 6-12-03	RHW	MHS	LDS	J.L.G.	ERT	NEW. J.L.G.	R.S.F.	Traced	Checked CED	
Field Check		BEL 6-12-03	PPB	(BELL/PPB)	PPB	PPB	C.R.S.	C.R.S.	4-23-59 F.A.M. J.F.P.			
In Service		SWS 2-17-04	PER O.C. 1990 HDW	PER O.C. 1986 HDW	8-19-81	3-8-77		4-22-59		FEB. 27, 1958	SHEET NO. 1	CB 12450-12510

FTLB12485.01 of 3 7

Connects to FTLB 12485.01

A-12-4

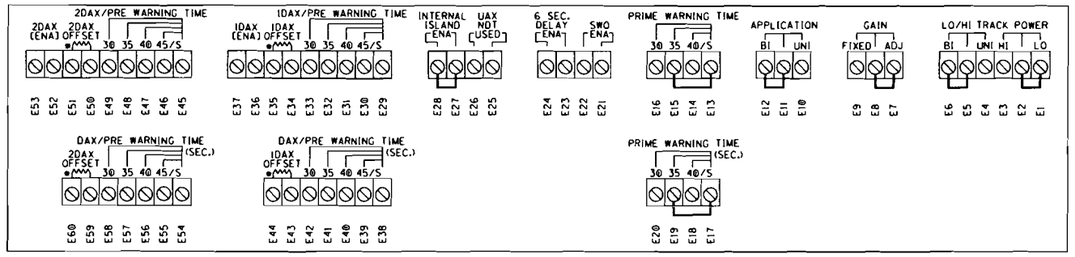

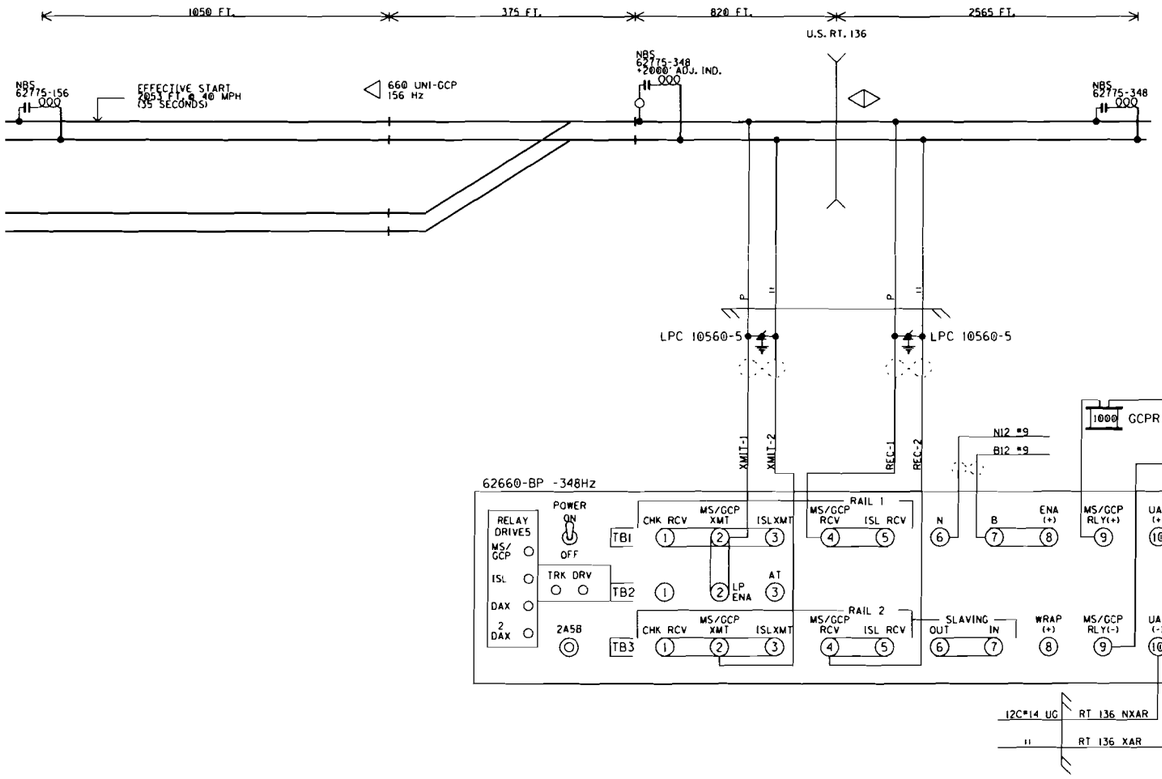

R-1966
RED = IN
YELLOW = OUT

08/04/95
DESIGNED BY CNB
CHECKED BY CWW

DATE: 06-23-88
NS PROJECT #
04.0006
IRS/DBS/JFK

ALL OUT
VOID THIS SHEET
UPON AS-IN-SERVICE

REVISIONS		
PER O.C. 6-1-95 PPB	MST 08-04-95	

DESIGNED BY -	NORFOLK SOUTHERN
DRAWN BY SJS 11-21-95	OFFICE OF ASST. VICE PRESIDENT SIGNAL & ELECT., ATLANTA, GA. — LOCATION: U. S. ROUTE 136
CHECKED BY --- - -	BEMENT TO GIBSON CITY, IL
IN SERVICE --- - -	DISTRICT FORREST — CADD NO. FTLB12485.02 — SHEET NO. 2 OF 9 6
FILE: R-8286	PROPERTY NORFOLK AND WESTERN RAILWAY — CB 12450-12510

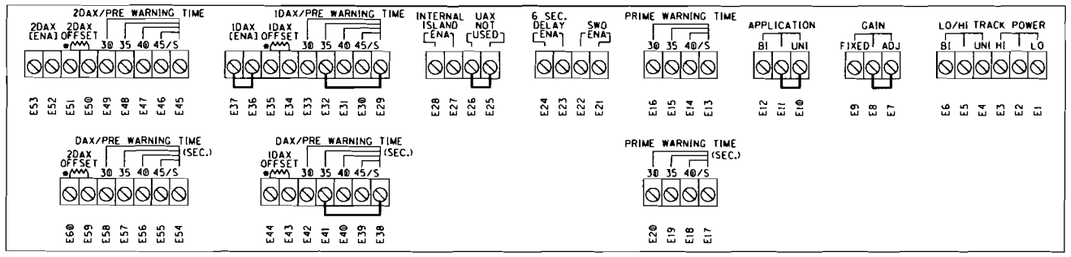

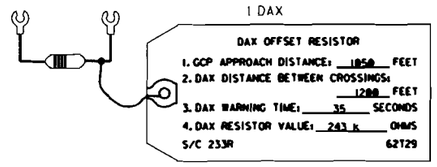

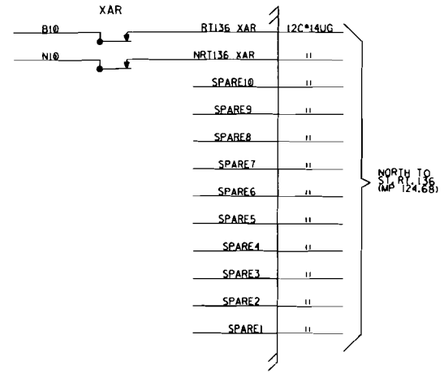

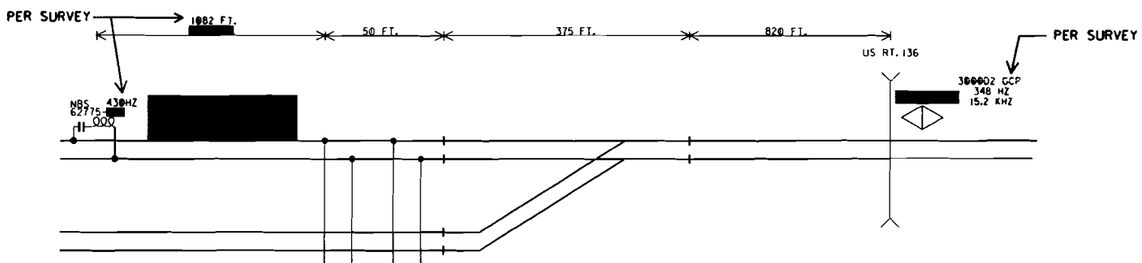

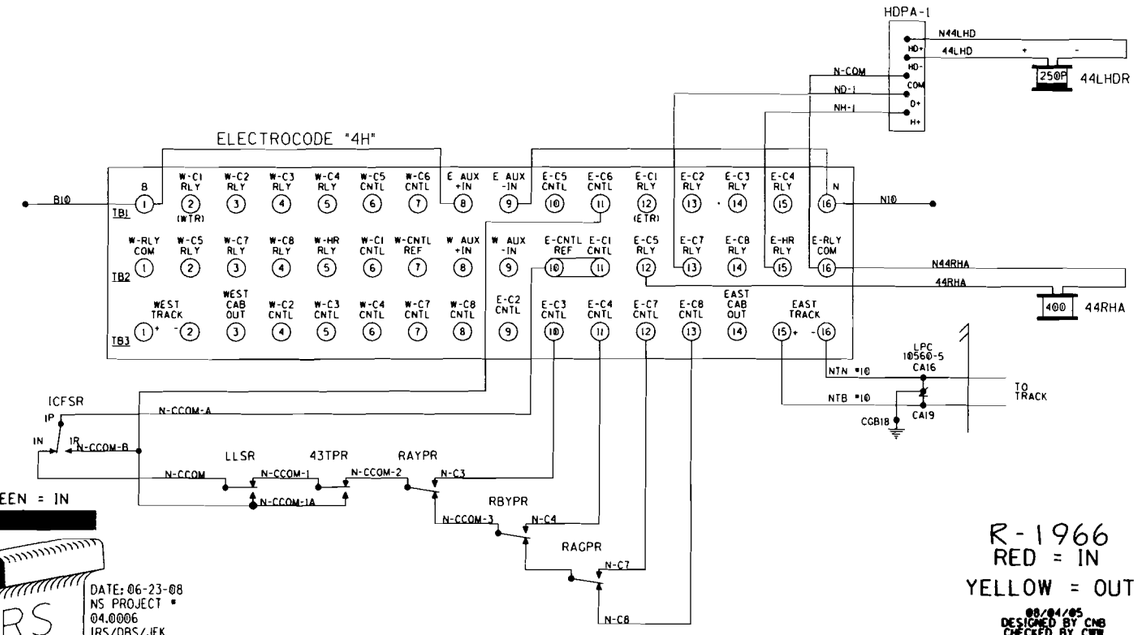

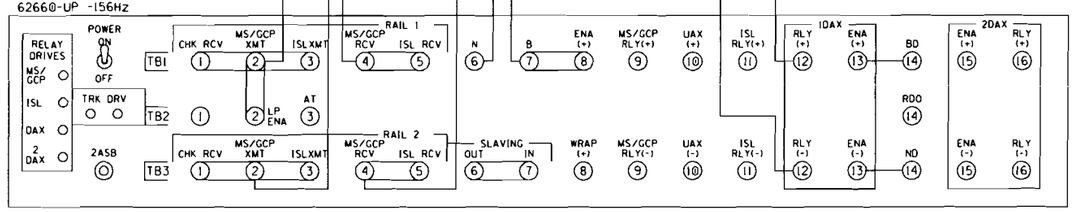

GREEN = IN

DATE: 06-23-08
NS PROJECT #
04.0006
IRS/DBS/JFK

R-1966
RED = IN
YELLOW = OUT

08/04/05
DESIGNED BY CNB
CHECKED BY CWW

DESIGNED BY RHW 07-27-90	NORFOLK SOUTHERN
DRAWN BY RHW 07-27-90	OFFICE OF ASST. VICE PRESIDENT SIGNAL & ELECT. ATLANTA, GA. — LOCATION: NORTH END OF OSMOND
CHECKED BY	BEMENT TO GIBSON CITY, IL
IN SERVICE	DISTRICT: FORREST — CADD NO.: FTLB12485.03 — SHEET NO.: 3 OF 9 6
FILE: R-9119	PROPERTY: NORFOLK AND WESTERN RAILWAY — CB 12450-12510

REVISIONS: PER O.C. 6-1-95 PPB — MST 08-04-05