3,200'± APPROACH PROVIDES A MAXIMUM OF 32 SEC WARNING TIME AT 60 MPH

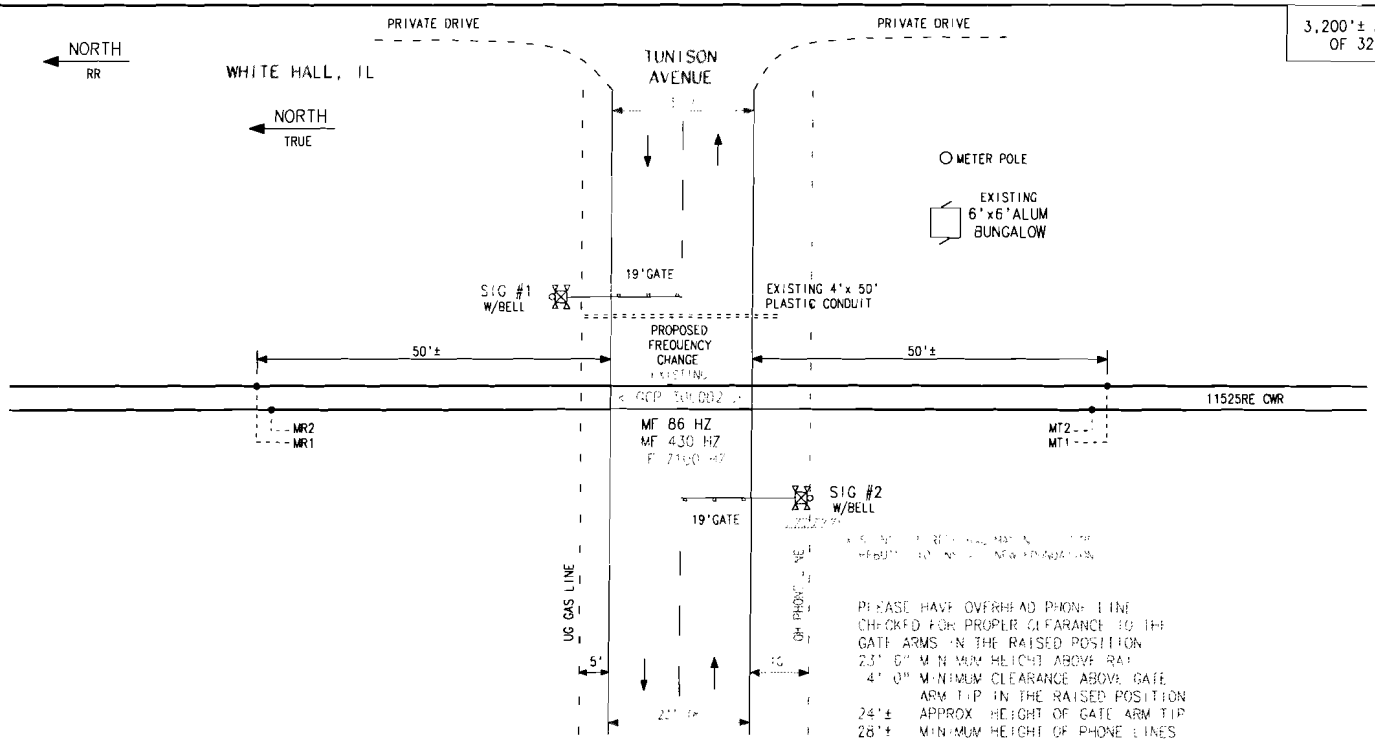

APPROX STREET ADDRESS

420 TUNISON AVENUE

MAXIMUM SPEED REGULATIONS
MP 067.0 TO MP 056.0 ...49 MPH
SPEED RESTRICTIONS ... NONE IN AREA

CROSSING SURFACE INFO:
27'-6" TIMBER & ASPHALT

KCSR PROPERTY – 33' FROM CENTERLINE IN ALL QUADRANTS

CONSTRUCTION SUPERVISOR OR SIGNAL SUPERVISOR TO FILL OUT PIPE OR CONDUIT LOCATION CHART PROVIDED BELOW. PLEASE LABLE PIPES BY AN ALPHA DESIGNATION (EXAMPLE 4" PVC PIPE A)

UG SIGNAL CABLE PIPE LOCATION	DESTINATION QUADRANT			BUNGALOW QUADRANT		
	TO ROAD	TO RAIL	DEPTH	TO ROAD	TO RAIL	DEPTH
4" PVC PIPE A						
4" PVC PIPE B						
4" PVC PIPE C						
4" PVC PIPE D						

ALL DIMENSIONS MEASURED PERPENDICULAR TO ROAD OR PERPENDICULAR TO RAIL

INSTALL NEW CONCRETE FOUNDATIONS AND ALL NEW FLASHER & GATE ASSEMBLY WITH S-40 GATE MECHANISMS AND BURY ALL NEW UG CABLES TO SIGNALS

SIG #1 LOCATION:

8'-3"± FROM THE EDGE OF PAVED ROAD, MEASURED PERPENDICULAR TO ROAD FROM CENTER OF SIGNAL POLE TO THE EDGE OF PAVED ROAD

15'-0"± FROM NEAR RAIL AT GATE BASE, MEASURED PERPENDICULAR TO RAIL FROM CENTER OF SIGNAL POLE TO THE NEAREST EDGE OF RAIL

MUTCD MINIMUM RESTRICTIONS
8'-3" MIN. FROM EDGE OF TRAVELED ROAD
12'-0" MIN. FROM CENTERLINE OF RAIL
GATE ARM TO BE PERPENDICULAR TO ROAD

SIG #2 LOCATION:

6'-10"± FROM THE EDGE OF PAVED ROAD, MEASURED PERPENDICULAR TO ROAD FROM CENTER OF SIGNAL POLE TO THE EDGE OF PAVED ROAD

13'-4"± FROM NEAR RAIL AT GATE BASE, MEASURED PERPENDICULAR TO RAIL FROM CENTER OF SIGNAL POLE TO THE NEAREST EDGE OF RAIL

MUTCD MINIMUM RESTRICTIONS
8'-3" MIN. FROM EDGE OF TRAVELED ROAD
12'-6" MIN. FROM CENTERLINE OF RAIL
GATE ARM TO BE PERPENDICULAR TO ROAD

BUNGALOW LOCATION:

30'-0"± FROM THE EDGE OF PAVED ROAD, MEASURED PARALLEL TO THE RAIL FROM NEAREST SIDE OF BUNGALOW TO EDGE OF THE PAVED ROAD

25'-0"± FROM THE NEAR RAIL, MEASURED PERPENDICULAR TO RAIL FROM NEAREST SIDE OF BUNGALOW TO THE NEAREST EDGE OF RAIL

MUTCD SUGGESTED CLEARANCES
30'-0"± FROM THE EDGE OF HIGHWAY
25'-0"± FROM THE NEAREST RAIL

KANSAS CITY SOUTHERN LINES SIGNAL DEPT.

DWG. NO. SD-33-2-064.13A

LOCATION TUNISON AVENUE
WHITE HALL, IL

FILE SD-33-5-064.13
DOT NO. 294-607L
MILE POST 064.13

REVISION BLOCK	FLASHERS IN SERVICE 01/08/98	FLSHRS & GATES IN SERVICE

I/DOT's DEADLINE DATE 4/15/09

ORANGE=OUT
BLUE = IN
GREEN=NOTE

ASSET #982405

RECEIVED
OCT 20 2008
Illinois Commerce Commission
RAIL SAFETY SECTION

NORTH
RR

WHITE HALL, IL

LINCOLN STREET

IL HWY 67
3RD AVE

AC

6'x8' STEEL BUNGALOW

INSTALL ALL NEW SHUNT BOX

3,200'± >

BRIDGEPORT MULTI SHUNT #62775-8621

SHUNT BOX

3,080'± >

BRIDGEPORT MULTI SHUNT #62775-8621

AC

6'x6' ALUM BUNGALOW

WHITE HALL CO-OP SWITCH MP 064.88

AC/DC RECT

R/B SXT AC/DC

WHITE HALL COOP

SEE DWG SD-33-2-064.13C

2,464'± >

IL HWY 67 MULTI SHUNT #62775-1543

3,080'± >

LINCOLN ST MULTI SHUNT #62775-1543

< GCP 3000D2 >

MF 348 HZ
IF 5900 HZ

< GCP 3000D2 >

MF 211 HZ
IF 4900 HZ

348 HZ
064.78

86 HZ
064.74

348 HZ
065.72

211 HZ
065.37

156 HZ
065.21

114 HZ
065.18

MP 65

IL HWY 67 MULTI SHUNT #62775-1543

< 2,464'±

SHUNT BOX

TUNISON AVE MULTI SHUNT #62775-8621

3,200'± >

INSTALL ALL NEW SHUNT BOX

MP 065.25
#294-613P

MP 064.79
#294-612H

BRIDGEPORT STREET SHUNT BOX TYPICAL

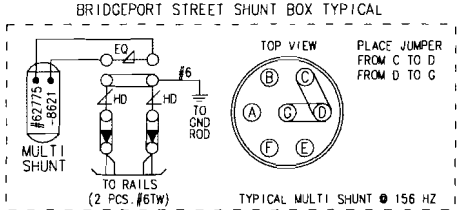

REFERENCE GCP 3000 APPLICATIONS GUIDELINES OR THE KCSP FIELD PRINT TYPICAL BOOK,
TABLE 12-6 FREQUENCY SELECTION JUMPERS
TABLE 12-9 INDUCTOR #2x617 CONNECTION

TUNISON AVENUE SHUNT BOX TYPICAL

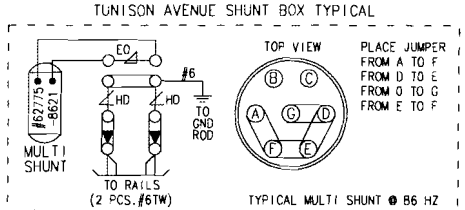

REFERENCE GCP 3000 APPLICATIONS GUIDELINES OR THE KCSP FIELD PRINT TYPICAL BOOK
TABLE 12-6 FREQUENCY SELECTION JUMPERS
TABLE 12-9 INDUCTOR #2x617 CONNECTION

REVISION BLOCK

KANSAS CITY SOUTHERN LINES SIGNAL DEPT.

DWG. NO. SD-33-2-064.13B

LOCATION TUNISON AVENUE
WHITE HALL, IL

FILE SD-33-5-064.13
DOT NO. 294-607L
MILE POST 064.13

NORTH
RR

WHITE HALL, IL

SEE DWG SD-33-2-064.13B

BRIDGEPORT STREET

PROPOSED FREQUENCY CHANGE

430 HZ
064.61

< GCP 3000D2 >

TUNISON AVE
MULTI SHUNT
#62775-1543
2,464'± >

MF 156 HZ
MF 114 HZ
IF 4000 HZ

6'x6' ALUM BUNGALOW

AC

MP 064.60
#294-610U

2,464'± >
McCARTHY ST
MULTI SHUNT
#62775-1543

< 3,080'±
LINCOLN ST
MULTI SHUNT
#62775-1543

285 HZ
064.25

211 HZ
064.21

TUNISON AVENUE

AC

6'x6' ALUM BUNGALOW

PROPOSED FREQUENCY CHANGE

< GCP 3000D2 >

MF 86 HZ
MF 430 HZ
IF 7100 HZ

MP 064.13
#294-607L

< 3,080'±
BRIDGEPORT
MULTI SHUNT
#62775-8621

114 HZ
064.02

INSTALL
ALL NEW
SHUNT BOX

< 3,200'±
BRIDGEPORT
MULTI SHUNT
#62775-8621
SHUNT BOX

156 HZ
063.99

MP
64

SEE DWG SD-33-2-064.13D

ASSET #982405
NEED TO CHANGE GCP FREQUENCY
TO BE COMPATIBLE WITH NEW
FREQUENCY AT TUNISON AVENUE

ASSET #982405
STATE PROJECT TO ADD GATES.
NEED TO CHANGE GCP FREQUENCY
NEED TO LENGTHEN APPROACHES

MATERIAL CONTAINER

SET MATERIAL CONTAINER AND THE BUNGALOW
BE SURE TO MAINTAIN GOOD SITE DISTANCES.
DELIVER CONTAINER TO THE ROCKHOUSE YARD
YARD LOCATION NOT PROVIDED
- FROM NEAREST EDGE OF ROAD
- FROM NEAREST EDGE OF RAIL
FOR DIRECTIONS OR EXACT PLACEMENT
CONTACT MIKE VAN TIEM (KCSR PROJECT ENGR
OFFICE 318-676-6269, CELL 318-218-7207
OR STEVE JONES (KCSR PROJECT MANAGER)
OFFICE 318-676-6264, CELL 318-347-5210

REVISION BLOCK

KANSAS CITY SOUTHERN LINES SIGNAL DEPT.

DWG. NO. SD-33-2-064.13C

LOCATION TUNISON AVENUE
WHITE HALL, IL

FILE SD-33-5-064.13
DOT NO. 294-607L
MILE POST 064.13

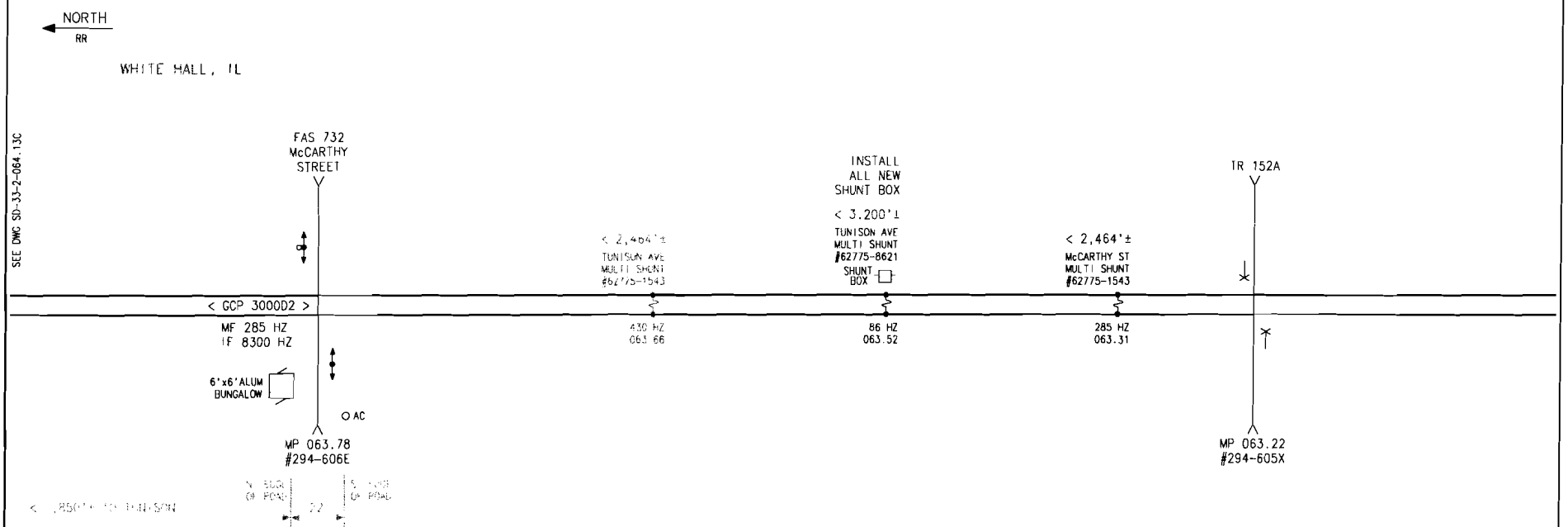

KANSAS CITY SOUTHERN LINES SIGNAL DEPT.

DWG. NO. SD-33-2-064.13D

LOCATION TUNISON AVENUE
WHITE HALL, IL

FILE SD-33-5-064.13
DOT NO. 294-607L
MILE POST 064.13

REVISION
BLOCK

INSTALLATION AND DESIGN INFORMATION

APPROACH AND WARNING TIME CALCULATIONS	GCP-T1 MAIN TRK	OTHER TRK	OTHER TRK	OTHER TRK
MINIMUM WARNING TIME	20 SEC			
PLUS CLEARANCE TIME	0 SEC			
PLUS BUFFER TIME	10 SEC			
TOTAL WARNING TIME	30 SEC			
TOTAL WARNING TIME	30 SEC			
PLUS EQUIP RESPONSE	5 SEC			
PLUS ADVANCE PREEMPT	0 SEC			
TOTAL APPROACH TIME	35 SEC			
MAX. TRAIN SPEED	60 MPH			
EQUATION FEET/SECOND	x 1.4667			
SPEED FEET PER SECOND	88.0 FPS			
TOTAL APPROACH TIME	35 SEC			
SPEED FEET PER SECOND	x 88.0			
APPROACH DISTANCE (MESURED FROM TIE-IN POINTS)	3,080'			
DISTANCE ROUNDED UP TO	3,200'±			

CLEARANCE DISTANCE FOR DESIGN PURPOSE WAS ESTIMATED TO BE 26'±
THIS DISTANCE SHOULD BE MEASURED EXACTLY AS PART OF THE INSTALLATION PROCESS, PER DIRECTIONS SHOWN IN CHART

PLEASE MEASURE EXACT CLEARANCE DISTANCE AS FOLLOWS:

MEASURE ALONG THE EDGE OF ROAD - FROM GATE ARM DOWN TO 6' MIN. BEYOND THE FARTHEST RAIL (6'IS MEASURED PERPENDICULAR TO RAIL)

MEASURE AT CENTER LINE OF ROAD - FROM GATE ARM DOWN TO 6' MIN. BEYOND THE FARTHEST RAIL (6'IS MEASURED PERPENDICULAR TO RAIL)

USE THE LONGEST DISTANCE MEASURED ABOVE TO DETERMINE CLEARANCE TIME IF OVER 35' MIN., AS PER THE CHART BELOW

ADD THE LONGEST CLEARANCE TIME TO THE WARNING TIME

CLEARANCE DISTANCE MEASUREMENTS

SIG #1 = AT EDGE OF ROAD ___ FT	SIG #1 = CENTER OF ROAD ___ FT	SIG #1 = LONGEST DISTANCE ___ FT	SIG #1 = CLEARANCE TIME = CT ___ SEC
SIG #2 = AT EDGE OF ROAD ___ FT	SIG #2 = CENTER OF ROAD ___ FT	SIG #2 = LONGEST DISTANCE ___ FT	SIG #2 = CLEARANCE TIME = CT ___ SEC

CT= CLEARANCE TIME		
	0' TO 35' = NONE	96' TO 105'= 7 SEC CT
	36' TO 45' = 1 SEC CT	106' TO 115'= 8 SEC CT
	46' TO 55' = 2 SEC CT	116' TO 125'= 9 SEC CT
	56' TO 65' = 3 SEC CT	126' TO 135'= 10 SEC CT
	66' TO 75' = 4 SEC CT	136' TO 145'= 11 SEC CT
	76' TO 85' = 5 SEC CT	146' TO 155'= 12 SEC CT
	86' TO 95' = 6 SEC CT	156' TO 165'= 13 SEC CT

TUNISON AVENUE NOTES:

1.) PROPOSED TO INSTALL THE FOLLOWING AS PART OF THIS STATE PROJECT:

2 EA. FLASHER & GATE SIGNALS WITH 12" LED LIGHTS

WIRE IN NEW GATE CONTROL CIRCUITRY INTO THE EXISTING 6'x4' STEEL BUNGALOW, REFER TO MATERIAL LIST FOR NEW EQUIPMENT

2.) 4" PVC CONDUIT FOR SIGNAL CABLING UNDER ROADWAY MAY BE INSTALLED BY DIRECTIONAL BORING METHOD

3.) APPROX 200 TONS OF FILL MATERIAL REQUIRED FOR BUNGALOW & SIGNALS

4.) ANY UTILITIES THAT INTERFERE WITH PROPER SIGNAL PLACEMENT WILL BE RELOCATED AT PROJECT EXPENSE

5.) ANY POWER LINES IN AREA WILL NEED TO BE AT LEAST 10'FROM TIP OF GATE ARM IN RAISED POSITION (VERTICAL)

6.) ANY DRAINAGE WORK REQUIRED FOR THE PROPER SIGNAL OR BUNGALOW PLACEMENT WILL BE AT PROJECT EXPENSE

7.) ALL PROPOSED DIMENSIONS ARE PLUS OR MINUS AT THE DISCRETION OF THE KCS SIGNAL SUPERVISOR AND/OR THE KCS PROJECT ENGINEER, IF WITHIN THE STATE GUIDELINES

MUTCD MINIMUM RESTRICTIONS FOR LOCATION AND CLEARANCE DIMENSIONS FOR FLASHER & GATE SIGNALS SHALL BE:

WHEN THERE IS A CURB...
A HORIZONTAL CLEARANCE OF AT LEAST 2'-0" SHALL BE PROVIDED FROM THE FACE OF THE VERTICAL CURB TO THE CLOSEST PART OF THE SIGNAL OR GATE ARM IN ITS UPRIGHT POSITION.

WHEN THERE IS A SHOULDER, BUT NO CURB...
A HORIZONTAL CLEARANCE OF AT LEAST 2'-0" FROM THE EDGE OF A PAVED OR SURFACED SHOULDER SHALL BE PROVIDED, WITH A CLEARANCE OF AT LEAST 6'-0" FROM THE EDGE OF THE TRAVELED WAY.

WHEN THERE IS NO CURB OR SHOULDER...
THE MINIMUM HORIZONTAL CLEARANCE SHALL BE 6'-0" FROM THE EDGE OF THE TRAVELED WAY.

MUTCD SUGGESTED LATERAL CLEARANCE FOR EQUIPMENT HOUSING (CONTROLLER CABINETS):

EQUIPMENT HOUSING SHOULD HAVE A LATERAL CLEARANCE OF AT LEAST 30'-0" FROM THE EDGE OF THE HIGHWAY AND WHERE RAILROAD PROPERTY AND CONDITIONS ALLOW, AT LEAST 25'-0" FROM THE NEAREST RAIL.

STATES IDENTIFICATION...
CITY OF WHITE HALL
GREENE COUNTY
SECTION 03-00016-01-SP
PROJECT RRP-0061(041)
JOB NO. C-98-316-04
DOT NO. 294-607L
KCS RAILWAY

STATE PROJECT ENGINEER:
MR. DAVID MARTH
COUNTY ENGINEER
RR1 BOX 15
CARROLLTON, IL 62016
217-942-6941
2 WEEKS NOTICE REQUIRED

SIGNAL FOREMAN TO CALL STATE PROJECT ENGINEER WHEN GANG SHOWS UP AT JOB SITE TO BEGIN WORK

KANSAS CITY SOUTHERN LINES SIGNAL DEPT.

DWG. NO. SD-33-2-064.13D1

LOCATION TUNISON AVENUE
WHITE HALL, IL

FILE SD-33-5-064.13
DOT NO. 294-607L
MILE POST 064.13

REVISION BLOCK

CABLE TABULATIONS

ONLY BURY NEW CABLE TO THE NEW GATES

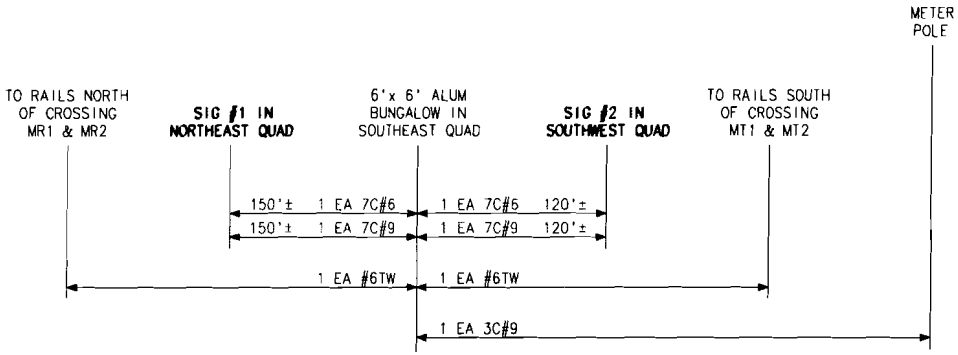

UG WIRE TOTALS

#6TW = 0'±
7C#9 = 270'±
7C#6 = 270'±
4C#6 = 0'±

KANSAS CITY SOUTHERN LINES SIGNAL DEPT.

DWG. NO. SD-33-2-064.13E

LOCATION TUNISON AVENUE
WHITE HALL, IL

FILE SD-33-5-064.13
DOT NO. 294-607L
MILE POST 064.13

REVISION BLOCK

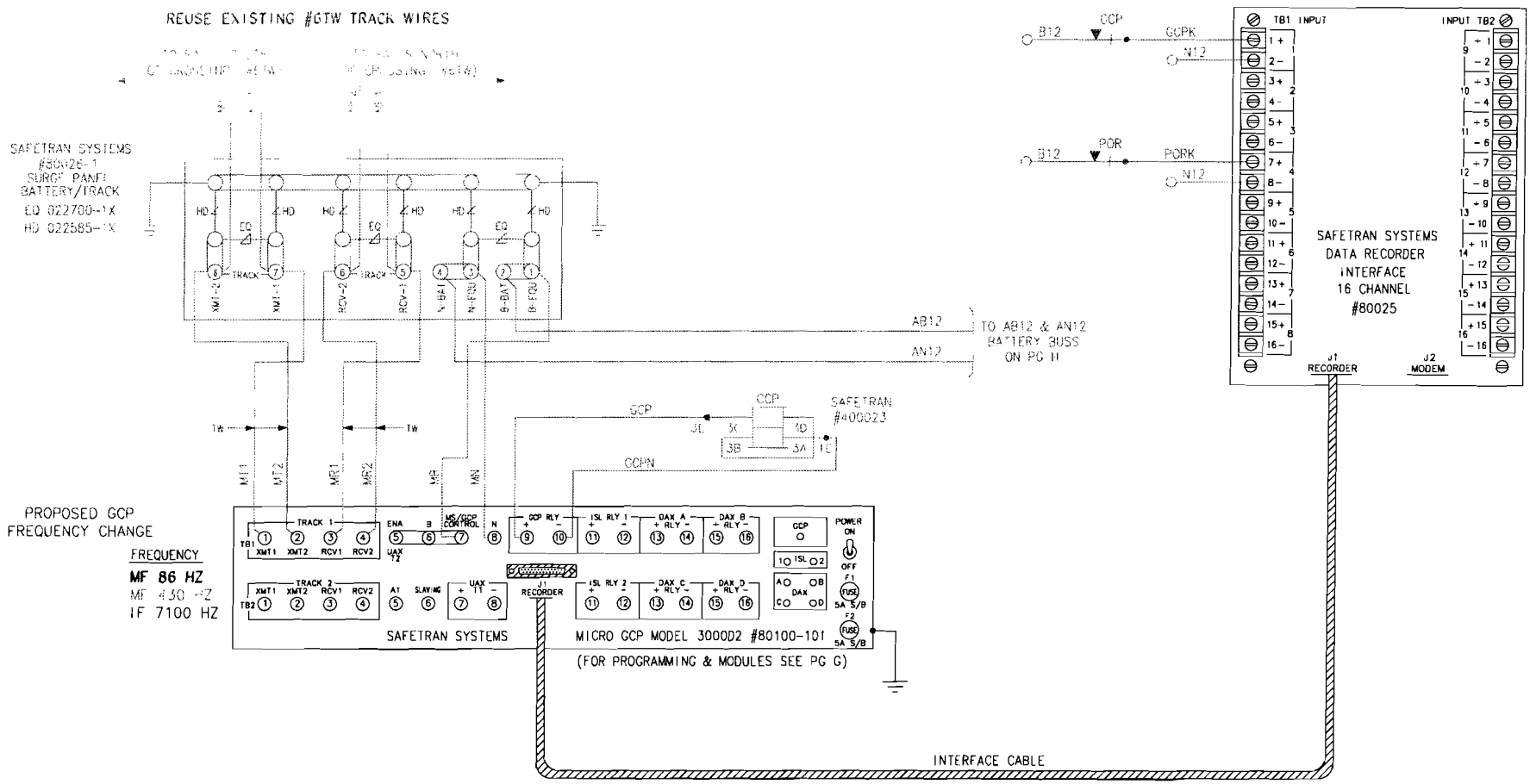

REVISION BLOCK	REV PER F PRINTS 11/12/98

ORANGE OUT PAGE

KANSAS CITY SOUTHERN LINES SIGNAL DEPT.

DWG. NO. SD-33-2-064.13F

LOCATION TUNISON AVENUE
WHITE HALL, IL

FILE SD-33-5-064.13
DOT NO. 294-607L
MILE POST 064.13

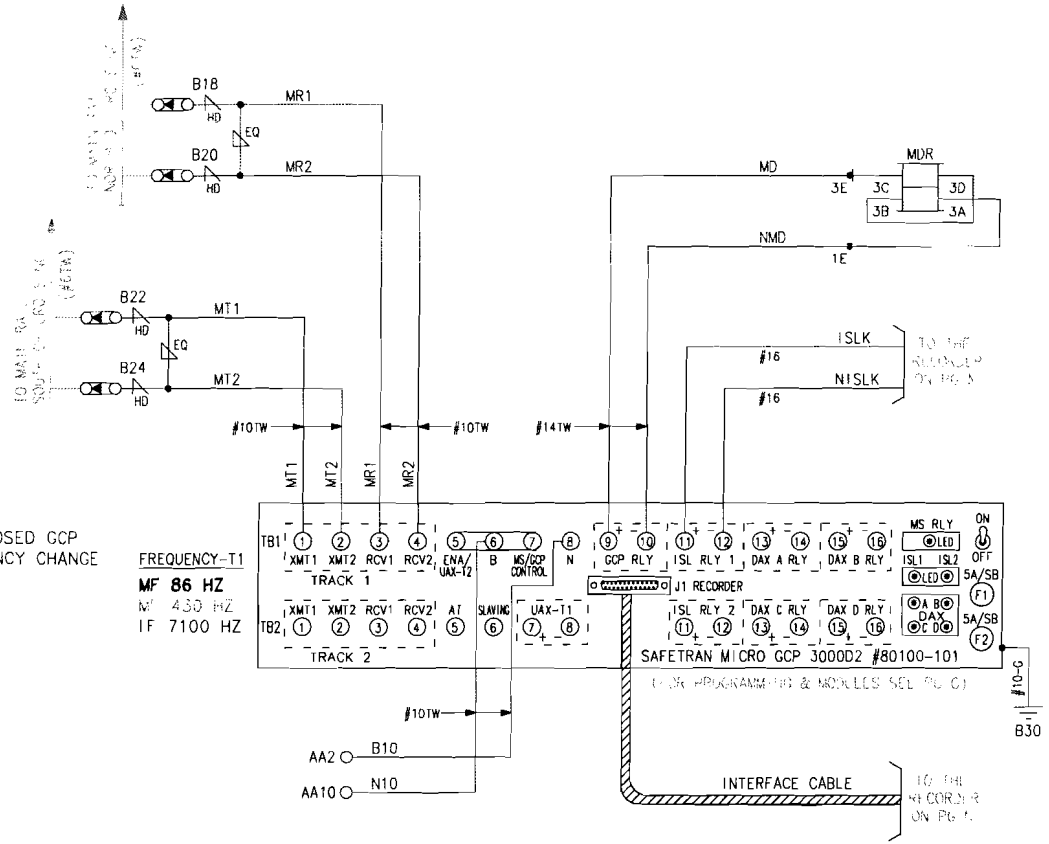

PROPOSED GCP
FREQUENCY CHANGE

FREQUENCY-T1
MF 86 HZ
MF 430 HZ
IF 7100 HZ

REVISION BLOCK	REV PER F PRINTS 11/12/98

BLUE IN PAGE

KANSAS CITY SOUTHERN LINES SIGNAL DEPT.

DWG. NO. SD-33-2-064.13F1

LOCATION TUNISON AVENUE
WHITE HALL, IL

FILE SD-33-5-064.13
DOT NO. 294-607L
MILE POST 064.13

GCP #3000D2 / PROGRAMMING HISTORY (Press PROGRAM Key)

NUMBER OF TRACKS (NUMBER OF TRANSCEIVERS MODULES)		1 ■ 2 □
FREQUENCY (MS/GCP)		86 430 Hz
UNIDIRECTIONAL/BIDIRECTIONAL	T1:	UNI □ BI ■
	T2:	UNI □ BI □
XMIT LEVEL	T1:	MAX ■ MED □
	T2:	MAX □ MED □
PREDICTOR/MOTION SENSOR	T1:	PRED ■ MS □
	T2:	PRED □ MS □
WARNING TIME SELECTED	T1:	30 25 SEC.
	T2:	N/A SEC.
APPROACH DISTANCE SELECTED	T1:	3,200' 2,464' FT.
FIELD MEASURE THE LONGEST PHYSICAL APPROACH	T2:	N/A FT.
APPROACH DISTANCE COMPUTED	T1:	SYSTEM COMPUTED FT.
	T2:	SYSTEM COMPUTED FT.
UAX1 PICKUP DELAY (0 = OFF)		0 SEC.
ENA / UAX2 DELAY (0 = OFF)		0 SEC.
ISLAND DISTANCE (BETWEEN ISLAND TRACK WIRES)	T1:	120' FT.
	T2:	N/A FT.
NUMBER OF DAX'S		0 ■ 1 □ 2 □ 3 □ 4 □
DAX A TRACK ASSIGNMENT		T1 □ T2 □
DAX A DISTANCE (0 = PREEMPT)		N/A FT.
DAX A WARNING TIME		N/A SEC.
DAX B TRACK ASSIGNMENT		T1 □ T2 □
DAX B DISTANCE (0 = PREEMPT)		N/A FT.
DAX B WARNING TIME		N/A SEC.
DAX C TRACK ASSIGNMENT		T1 □ T2 □
DAX C DISTANCE (0 = PREEMPT)		N/A FT.
DAX C WARNING TIME		N/A SEC.
DAX D TRACK ASSIGNMENT		T1 □ T2 □
DAX D DISTANCE (0 = PREEMPT)		N/A FT.
DAX D WARNING TIME		N/A SEC.
SLAVING MASTER/SLAVE		MASTER ■ SLAVE □
PASSWORD ENABLED		DISABLED ■

GCP #3000D2 / PROGRAMMING HISTORY (Press PROGRAM Key)

RECORDER INSTALLED		NOT INSTALL □
		INSTALLED ■
RS-232-C BAUD RATE		9600 BPS
RS-232-C DATA BITS		7 □ 8 ■
RS-232-C STOP BITS		1 ■ 2 □
RS-232-C PARITY		NONE ■ MARK □
		ODD □ SPACE □
		EVEN □
DATE (E.G.,MON 16 NOV 1987)		SETUP ON INSTALL
TIME (E.G.,11:25:43 AM)		SETUP ON INSTALL
DAYLIGHT SAVINGS		ON ■ OFF □

GCP #3000D2 / EXPANDED PROGRAMMING (Press FUNCTION Key)

SWITCH TO MS (ENTER EZ VALUE)	T1:	10 EZ
	T2:	N/A EZ
TRANSFER DELAY MS TO GCP (0 = OFF)	T1:	0 SEC.
	T2:	N/A SEC.
PRIME PREDICTION OFFSET (0 = OFF)	T1:	0 FT.
	T2:	N/A FT.
PICKUP DELAY PRIME		25 20 SEC.
PICKUP DELAY DAX A		N/A SEC.
PICKUP DELAY DAX B		N/A SEC.
PICKUP DELAY DAX C		N/A SEC.
PICKUP DELAY DAX D		N/A SEC.
COMPENSATION VALUE	T1:	SYSTEM COMPUTED
	T2:	SYSTEM COMPUTED
NUMBER OF TRACK WIRES	T1:	4 ■ 6 □
	T2:	4 □ 6 □

** ENHANCED DETECTION PROGRAM SELECTIONS...*
APPLICABLE ONLY TO GCP WITH 80044 OR 80214 PROCESSOR MODULE

**POOR SHUNTING DETECTION*	*T1:*	*ON □ OFF □*
	T2:	*ON □ OFF □*
**BACK TO BACK T1 AND T2*		*NO □ YES □*
**STATION STOP TIMER*	*T1:*	*SEC.*
	T2:	*SEC.*

GCP #3000D2 MODULE ASSEMBLIES

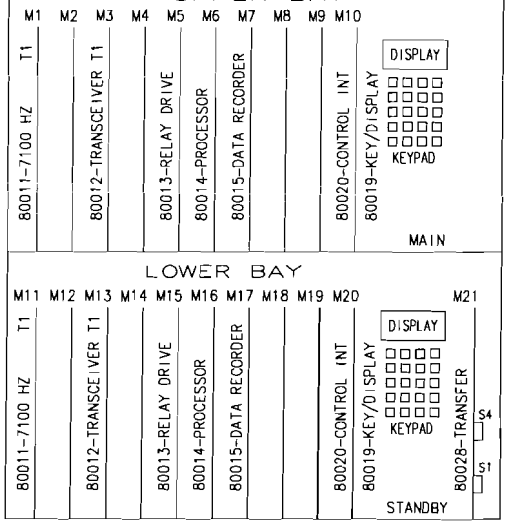

GCP #3000D2 / PART NO.80100-101
SINGLE SYSTEM / DUAL BASIC (REDUNDANT) FOR CONTROL OF ONE TRACK BI-DIRECTIONAL WITH ONE HIGH FREQUENCY ISLAND, TWO KEYBOARD/DISPLAYS, TWO DATA RECORDER MODULES, AND NO DAX MODULE

DAX SWITCH & TRANSFER TIMER SWITCH ON #80028 MODULE

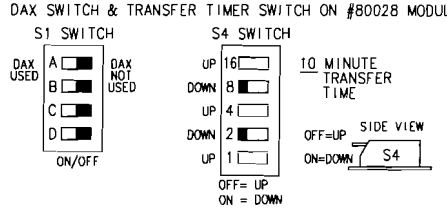

KANSAS CITY SOUTHERN LINES SIGNAL DEPT.

DWG. NO. SD-33-2-064.13G

LOCATION TUNISON AVENUE
WHITE HALL, IL

FILE SD-33-5-064.13
DOT NO. 294-607L
MILE POST 064.13

REVISION BLOCK	REV PER F PRINTS 11/12/98

GCP PROGRAM CHANGES

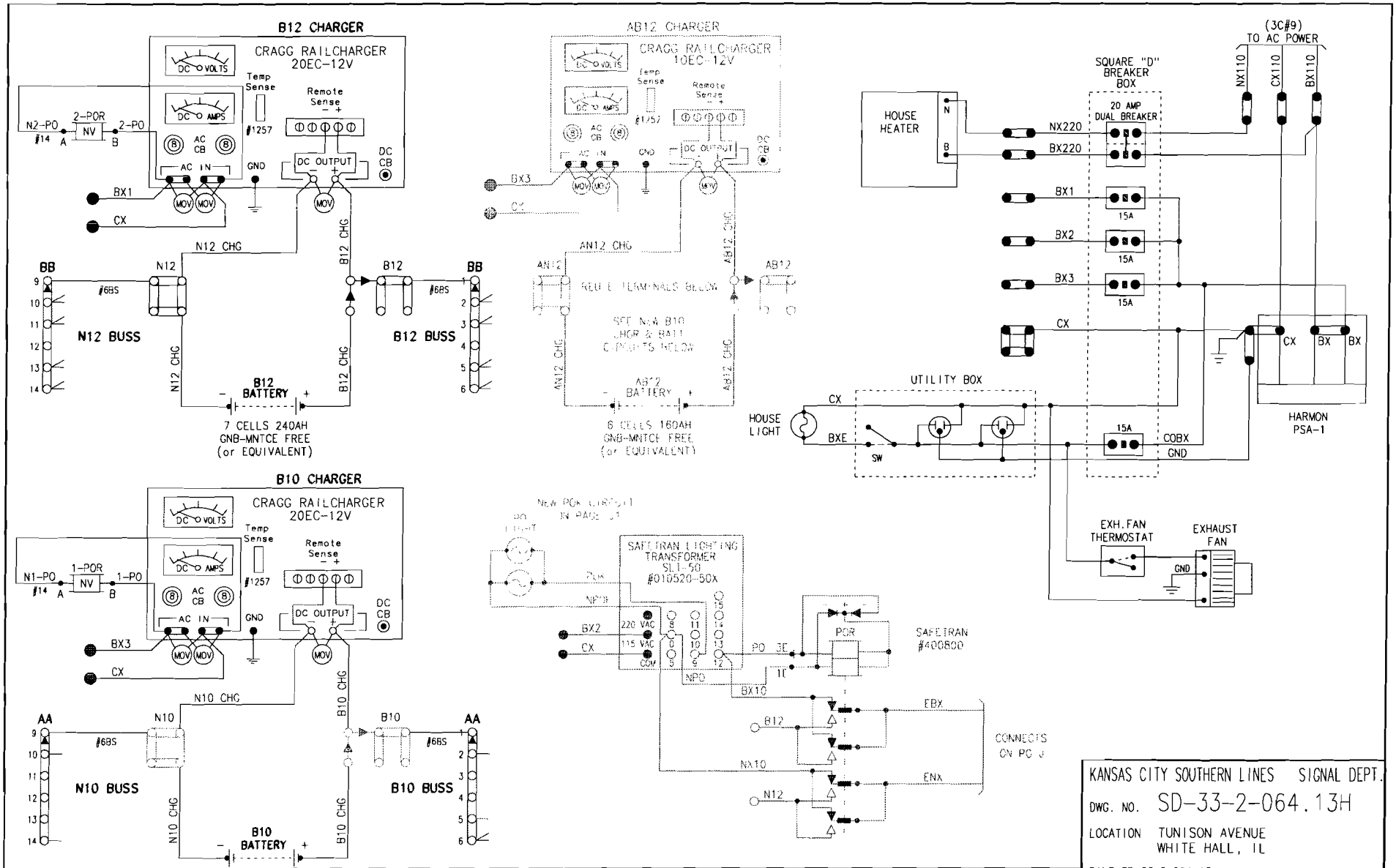

REVISION BLOCK	REV PER F PRINTS 11/12/98

KANSAS CITY SOUTHERN LINES SIGNAL DEPT.

DWG. NO. SD-33-2-064.13H

LOCATION TUNISON AVENUE
WHITE HALL, IL

FILE SD-33-5-064.13
DOT NO. 294-607L
MILE POST 064.13

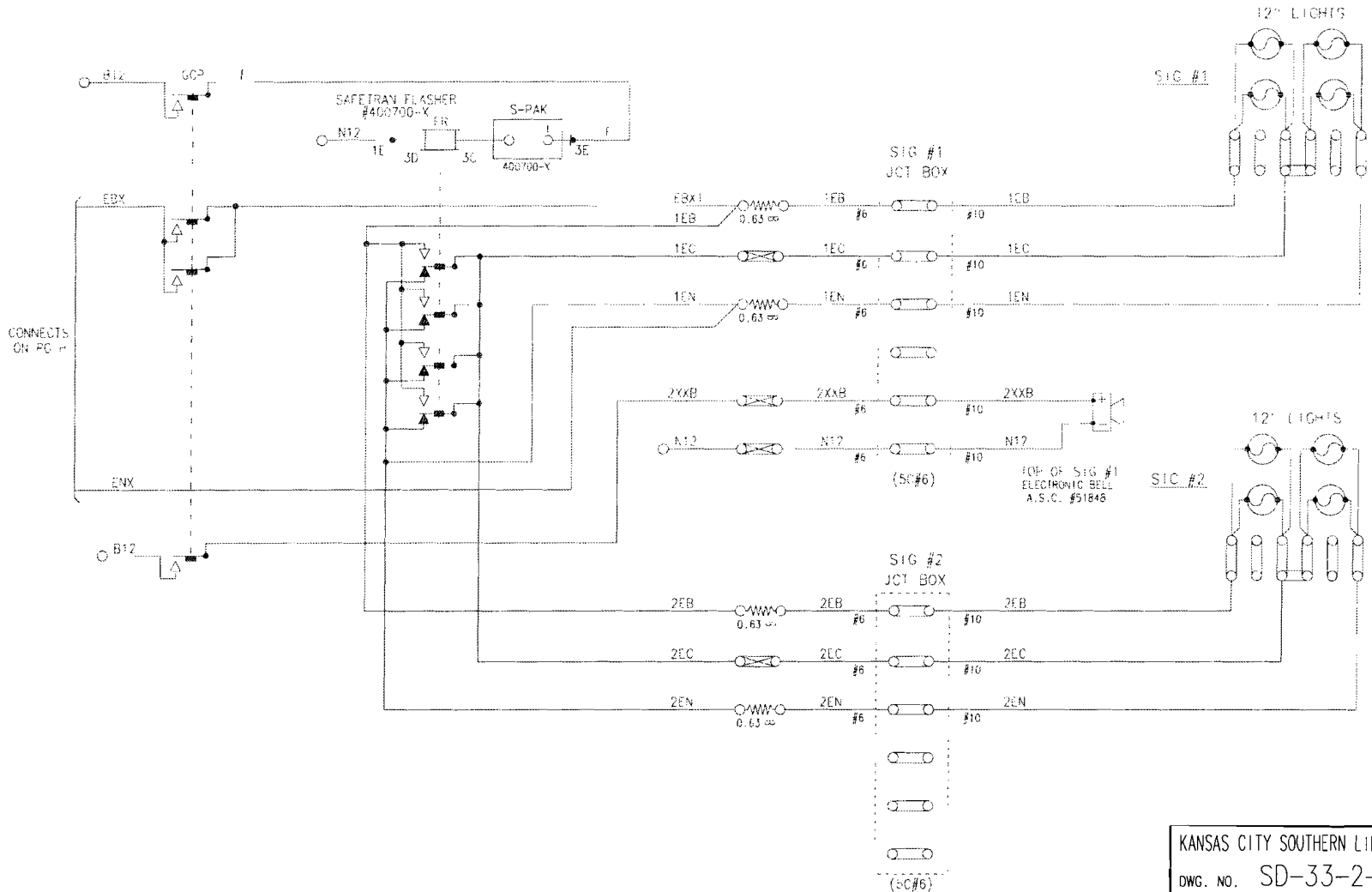

KANSAS CITY SOUTHERN LINES	SIGNAL DEPT.
DWG. NO.	SD-33-2-064.13J
LOCATION	TUNISON AVENUE WHITE HALL, IL
FILE SD-33-5-064.13	
DOT NO. 294-607L	
MILE POST 064.13	

REVISION BLOCK	REV PER F PRINTS 11/12/98

ORANGE OUT PAGE

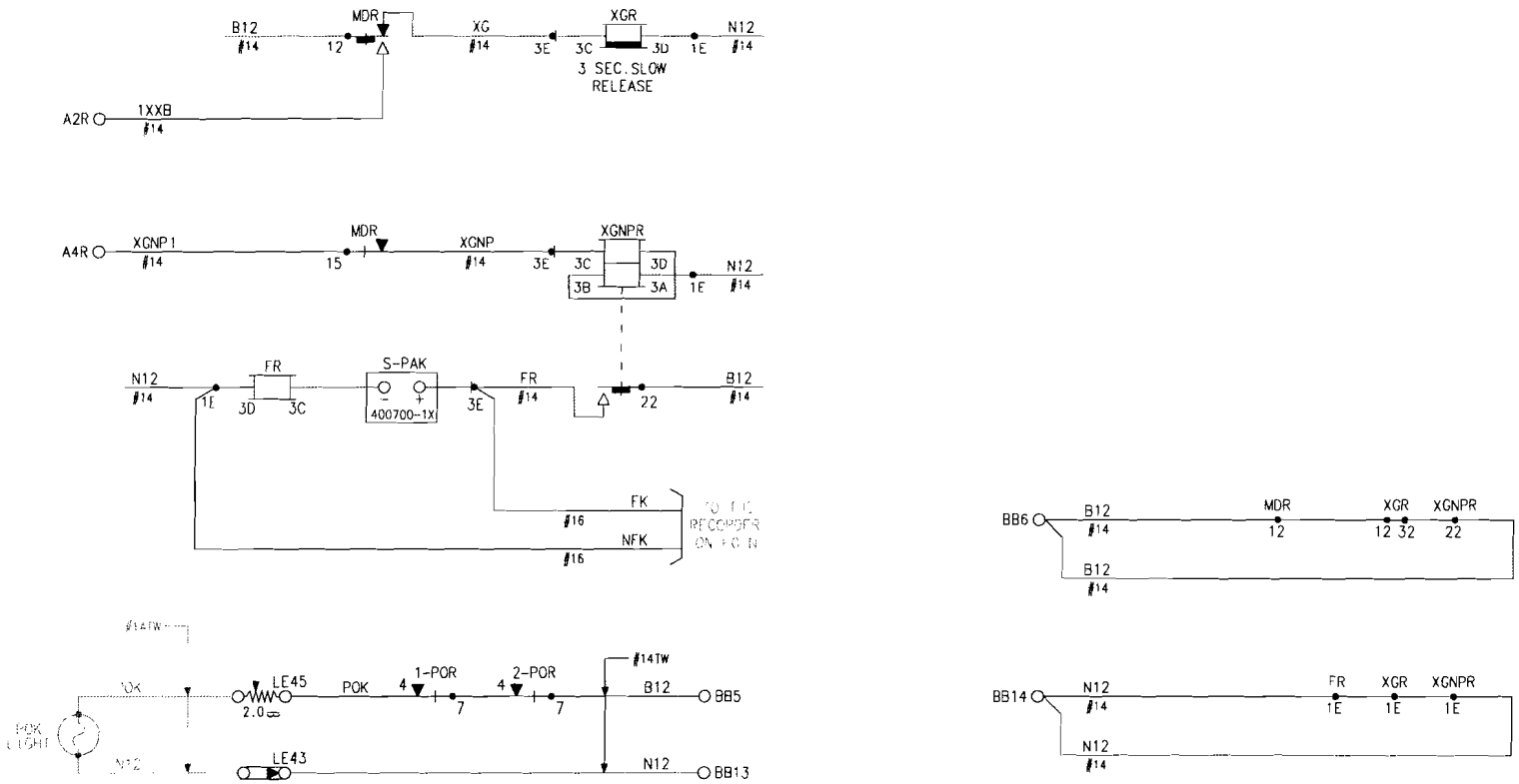

KANSAS CITY SOUTHERN LINES	SIGNAL DEPT.
DWG. NO.	SD-33-2-064.13J1
LOCATION	TUNISON AVENUE WHITE HALL, IL
FILE SD-33-5-064.13	
DOT NO. 294-607L	
MILE POST 064.13	

REVISION BLOCK

BLUE IN PAGE

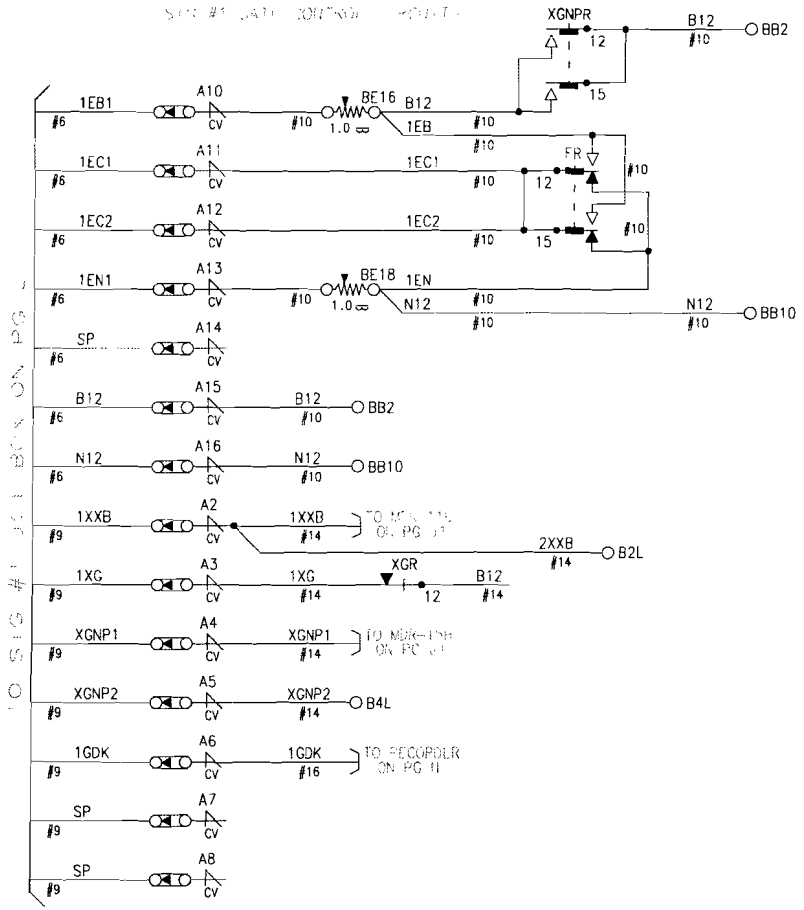

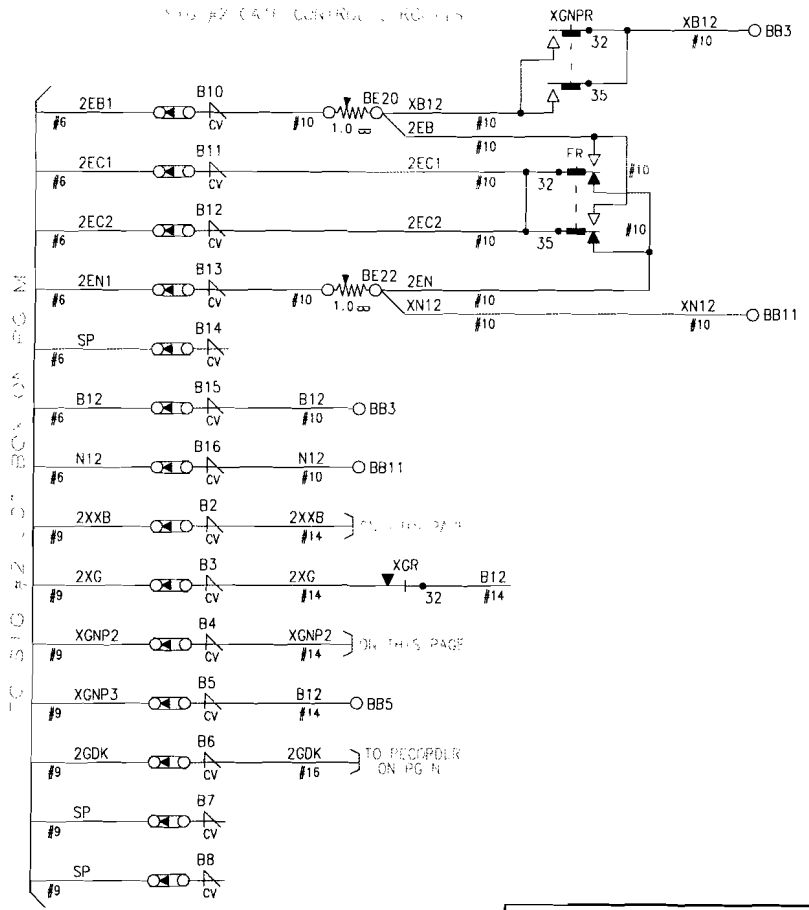

KANSAS CITY SOUTHERN LINES SIGNAL DEPT.

DWG. NO. SD-33-2-064.13K

LOCATION TUNISON AVENUE
WHITE HALL, IL

FILE SD-33-5-064.13
DOT NO. 294-607L
MILE POST 064.13

REVISION BLOCK

BLUE IN PAGE

SIG #1

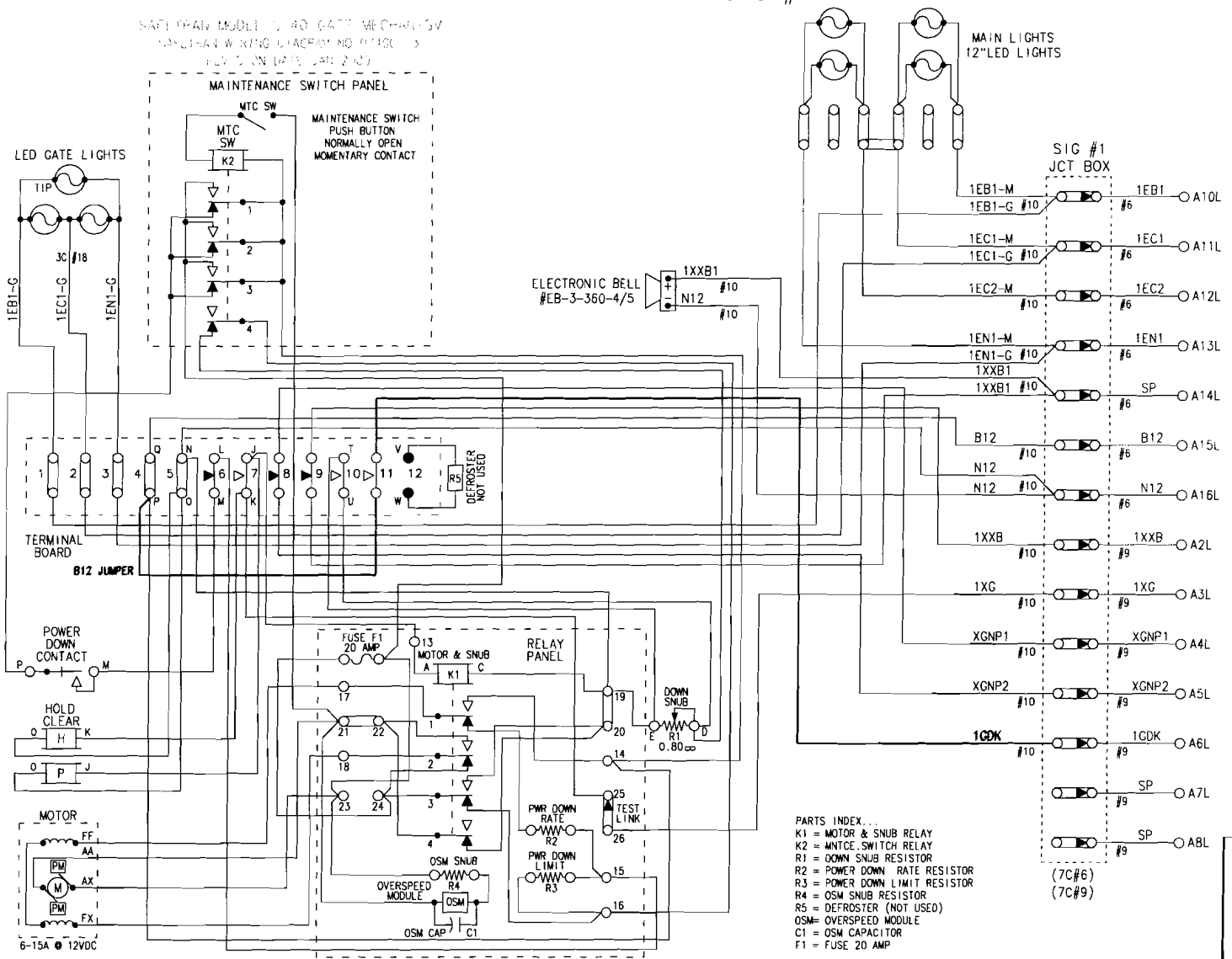

SAFETRAN MODEL S-40
GATE MECHANISM

CONTACT	CLOSED	FUNCTION	KCS CIRC
6	45°- 90°	POWER DOWN	XB12
7	0°- 89°	POWER UP	1XG
8	83°- 90°	FLASHING LIGHT	XGNP
9	5°- 90°	BELL	1XXB
10	0°- 5°	HORZ SNUB	XN12
11	0°- 5°	GATE DOWN	1GDK

GATE SHOWN IN VERITCAL POSITION

KANSAS CITY SOUTHERN LINES SIGNAL DEPT.

DWG. NO. SD-33-2-064.13L

LOCATION TUNISON AVENUE
WHITE HALL, IL

FILE SD-33-5-064.13
DOT NO. 294-607L
MILE POST 064.13

REVISION BLOCK

BLUE IN PAGE

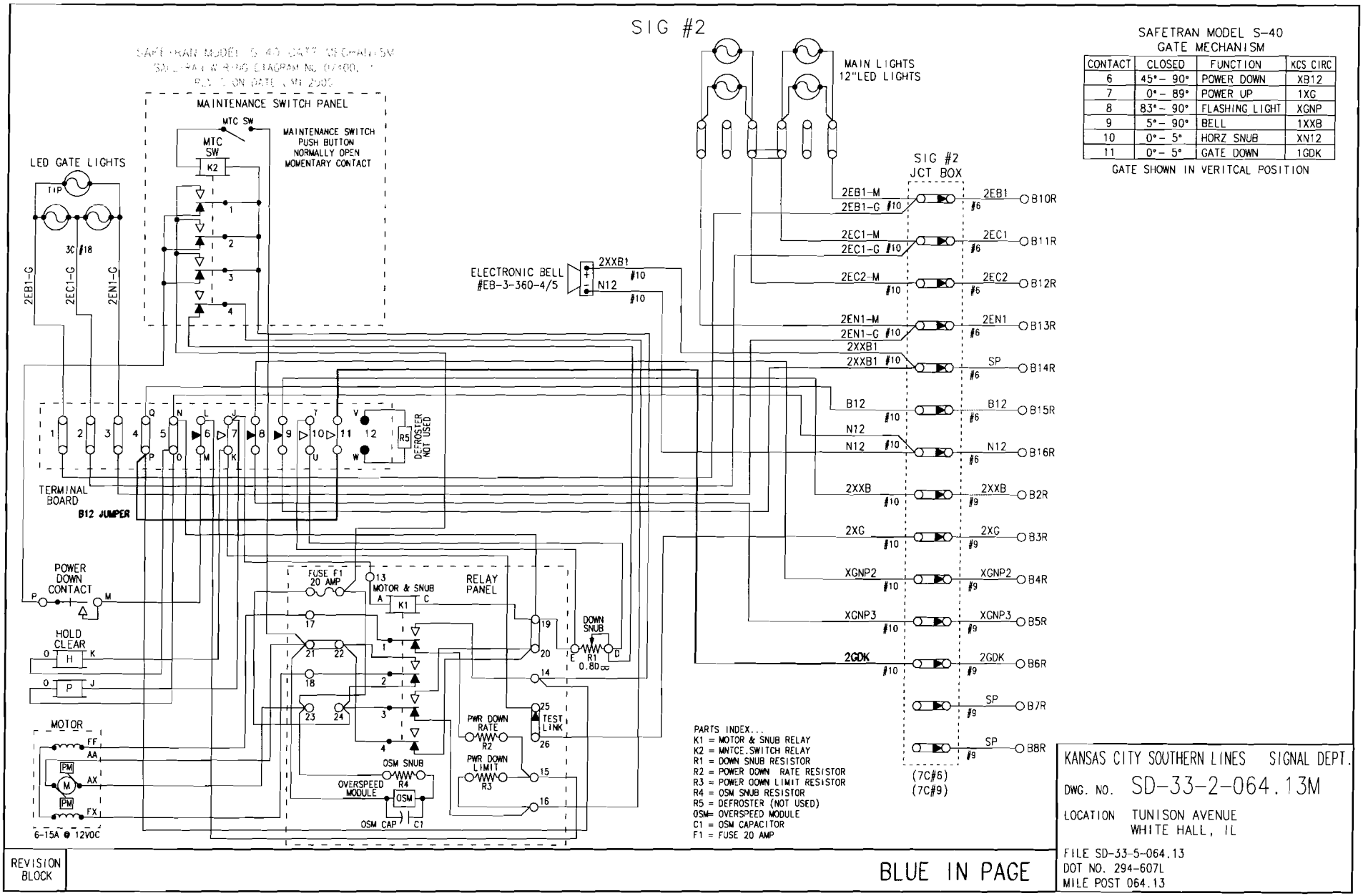
SIG #2
MAINTENANCE SWITCH PANEL
MTC SW
MAINTENANCE SWITCH PUSH BUTTON NORMALLY OPEN MOMENTARY CONTACT
LED GATE LIGHTS
TIP
3C #18
2EB1-G
2EC1-G
2EN1-G
ELECTRONIC BELL #EB-3-360-4/5
2XXB1
N12
#10
MAIN LIGHTS 12"LED LIGHTS
SIG #2 JCT BOX
2EB1-M
2EB1-G
2EC1-M
2EC1-G
2EC2-M
2EN1-M
2EN1-G
2XXB1
B12
N12
2XXB
2XG
XGNP2
XGNP3
2GDK
SP
#6
#9
B10R
B11R
B12R
B13R
B14R
B15R
B16R
B2R
B3R
B4R
B5R
B6R
B7R
B8R
(7C#6)
(7C#9)
TERMINAL BOARD
B12 JUMPER
DEFROSTER NOT USED
R5
POWER DOWN CONTACT
HOLD CLEAR
H
P
MOTOR
FF
AA
AX
FX
PM
M
6-15A @ 12VDC
FUSE F1 20 AMP
MOTOR & SNUB
K1
RELAY PANEL
DOWN SNUB
R1 0.8Ω
PWR DOWN RATE
R2
TEST LINK
PWR DOWN LIMIT
R3
OSM SNUB
R4
OVERSPEED MODULE
OSM
OSM CAP
C1
PARTS INDEX...
K1 = MOTOR & SNUB RELAY
K2 = MNTCE.SWITCH RELAY
R1 = DOWN SNUB RESISTOR
R2 = POWER DOWN RATE RESISTOR
R3 = POWER DOWN LIMIT RESISTOR
R4 = OSM SNUB RESISTOR
R5 = DEFROSTER (NOT USED)
OSM= OVERSPEED MODULE
C1 = OSM CAPACITOR
F1 = FUSE 20 AMP
SAFETRAN MODEL S-40
GATE MECHANISM
CONTACT | CLOSED | FUNCTION | KCS CIRC
6 | 45°- 90° | POWER DOWN | XB12
7 | 0°- 89° | POWER UP | 1XG
8 | 83°- 90° | FLASHING LIGHT | XGNP
9 | 5°- 90° | BELL | 1XXB
10 | 0°- 5° | HORZ SNUB | XN12
11 | 0°- 5° | GATE DOWN | 1GDK
GATE SHOWN IN VERITCAL POSITION
KANSAS CITY SOUTHERN LINES SIGNAL DEPT.
DWG. NO. SD-33-2-064.13M
LOCATION TUNISON AVENUE
WHITE HALL, IL
FILE SD-33-5-064.13
DOT NO. 294-607L
MILE POST 064.13
REVISION BLOCK
BLUE IN PAGE

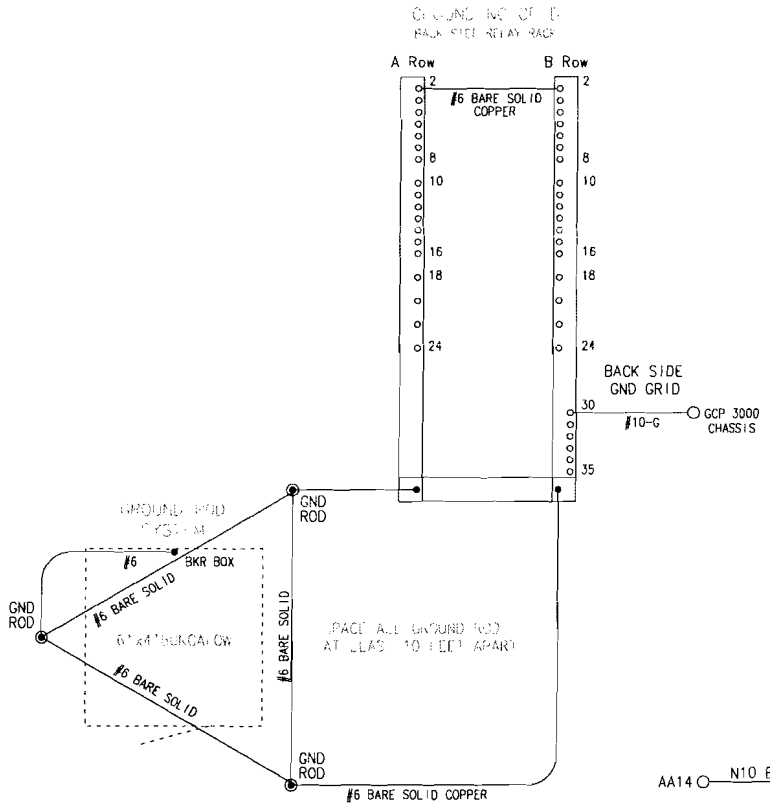

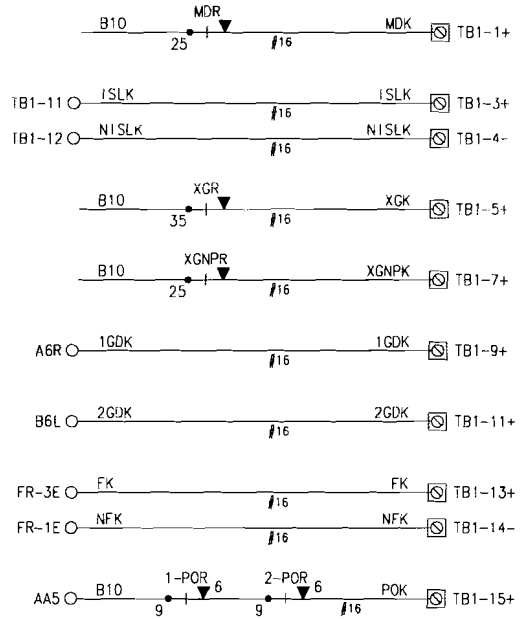

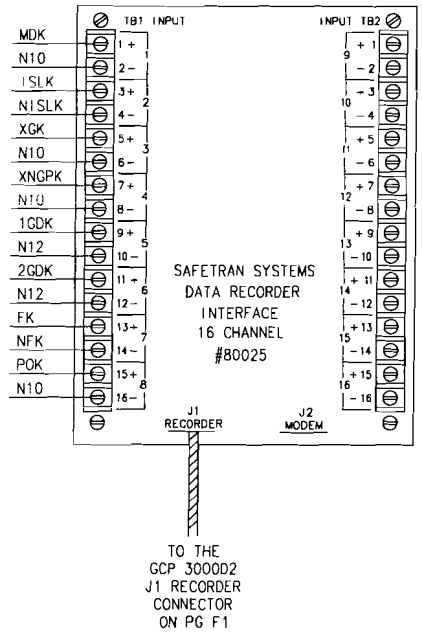

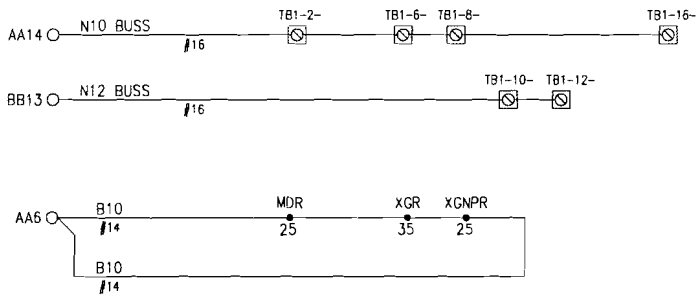

KANSAS CITY SOUTHERN LINES SIGNAL DEPT.

DWG. NO. SD-33-2-064.13N

LOCATION TUNISON AVENUE
WHITE HALL, IL

FILE SD-33-5-064.13
DOT NO. 294-607L
MILE POST 064.13

REVISION BLOCK

BLUE IN PAGE

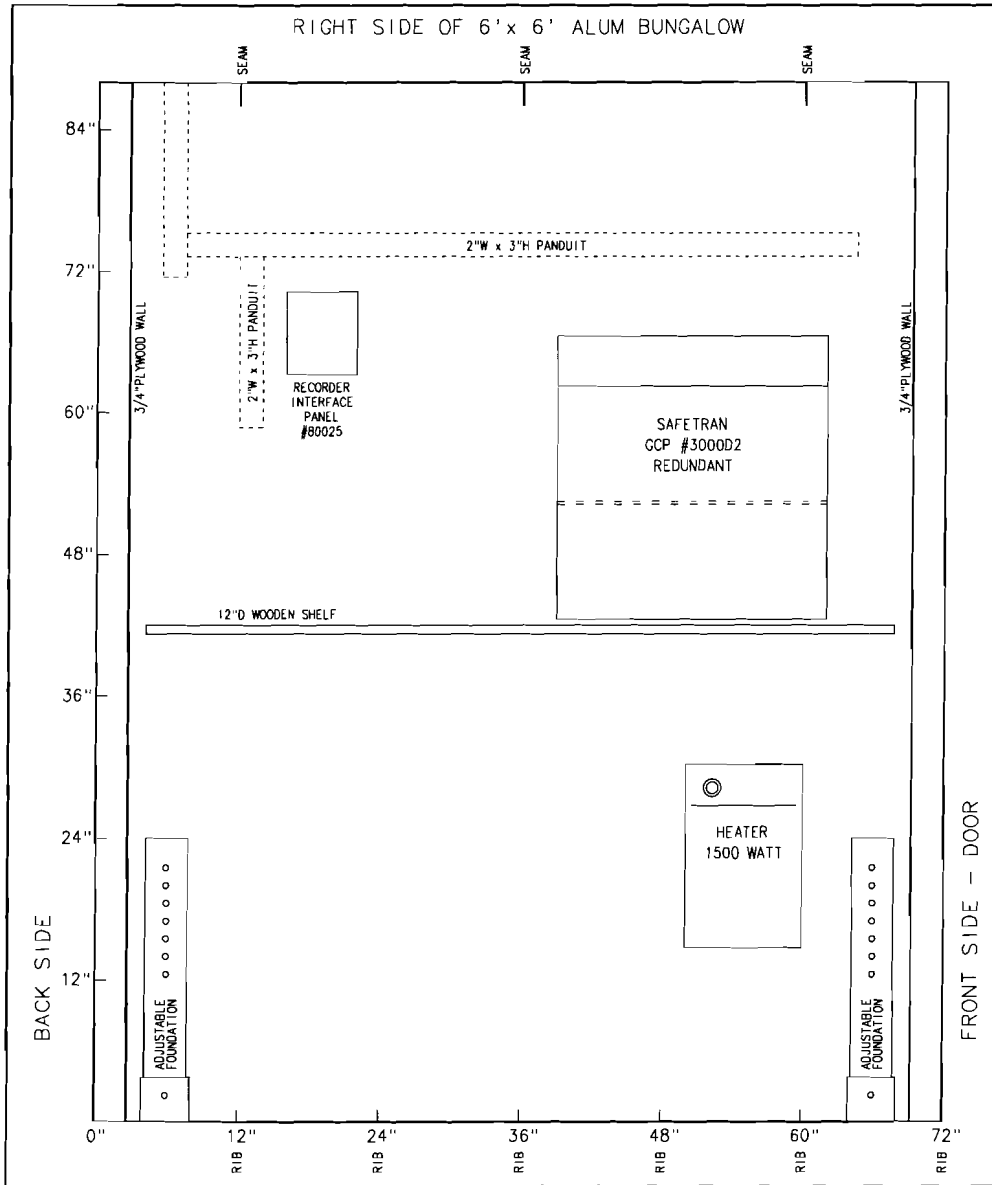

REVISION BLOCK

KANSAS CITY SOUTHERN LINES SIGNAL DEPT.

DWG. NO. SD-33-2-064.13P

LOCATION TUNISON AVENUE
WHITE HALL, IL

FILE SD-33-5-064.13
DOT NO. 294-607L
MILE POST 064.13

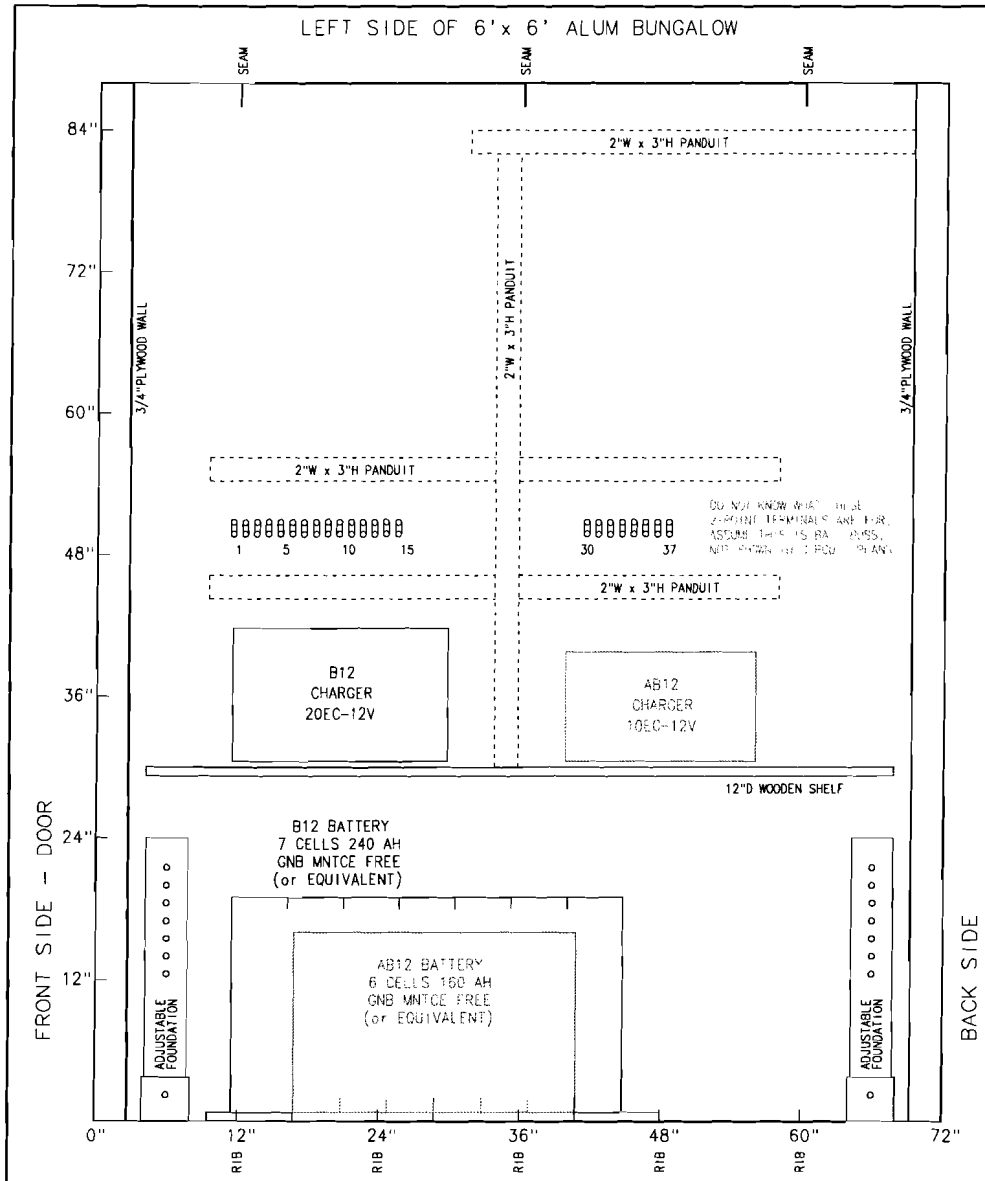

REVISION BLOCK

ORANGE OUT PAGE

KANSAS CITY SOUTHERN LINES SIGNAL DEPT.

DWG. NO. SD-33-2-064.13Q

LOCATION TUNISON AVENUE
WHITE HALL, IL

FILE SD-33-5-064.13
DOT NO. 294-607L
MILE POST 064.13

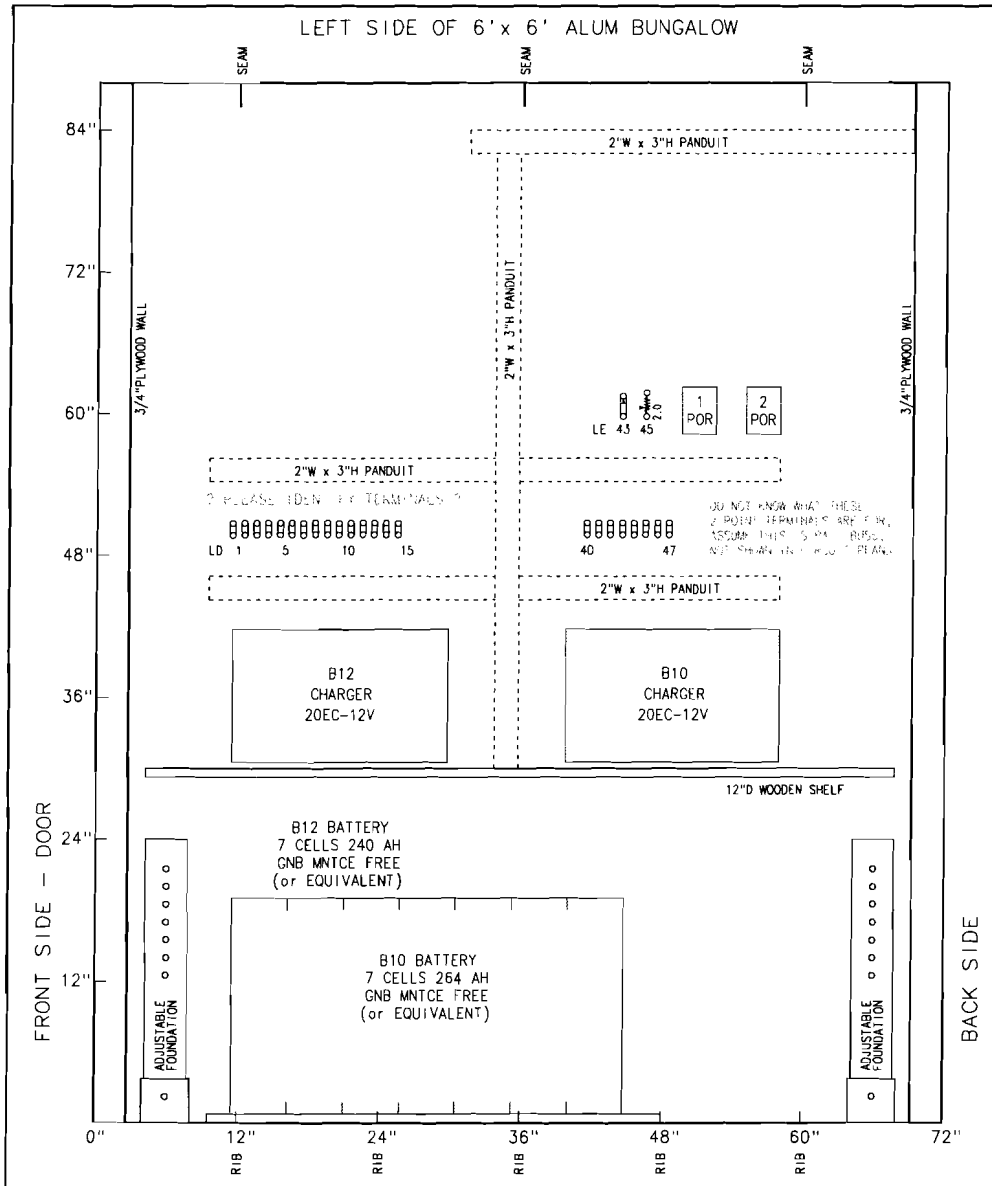

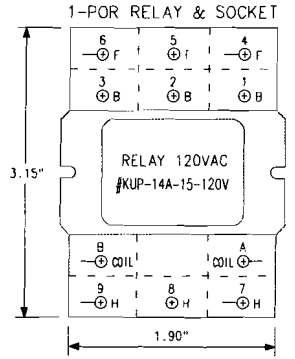

CONTACT - SOCKET TERMINAL NO.
1st CONTACT - 9H, 6F, 3B
2nd CONTACT - 8H, 5F, 2B
3rd CONTACT - 7H, 4F, 1B
RELAY COILS - A, B (2,250 OHMS)

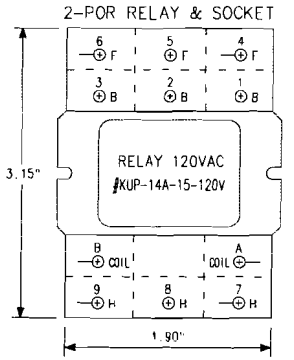

CONTACT - SOCKET TERMINAL NO.
1st CONTACT - 9H, 6F, 3B
2nd CONTACT - 8H, 5F, 2B
3rd CONTACT - 7H, 4F, 1B
RELAY COILS - A, B (2,250 OHMS)

POWER OFF MATERIAL:

1 EA. RESISTOR 2.0 OHM ADJUSTABLE #029602-6X
2 EA. RELAY, P&B 120 VAC, 3FB #KUP-14A-15-120V
POR - (WITH THREE 10A CONTACTS AT 28VDC)
2 EA. RELAY SOCKET P&B, #27E121
4 EA. RELAY HOLD DOWN CLIP, #20C254
2 EA. 2-POINT TERMINAL, NO CONNECTING LINK #023612-1X
2 EA. 2-3/8" INSULATED TEST LINK #024620-4X
(WITH GOLD TEST LINK NUT & CLAMP NUT)

KANSAS CITY SOUTHERN LINES SIGNAL DEPT.

DWG. NO. SD-33-2-064.13Q1

LOCATION TUNISON AVENUE
WHITE HALL, IL

FILE SD-33-5-064.13
DOT NO. 294-607L
MILE POST 064.13

REVISION BLOCK

BLUE IN PAGE

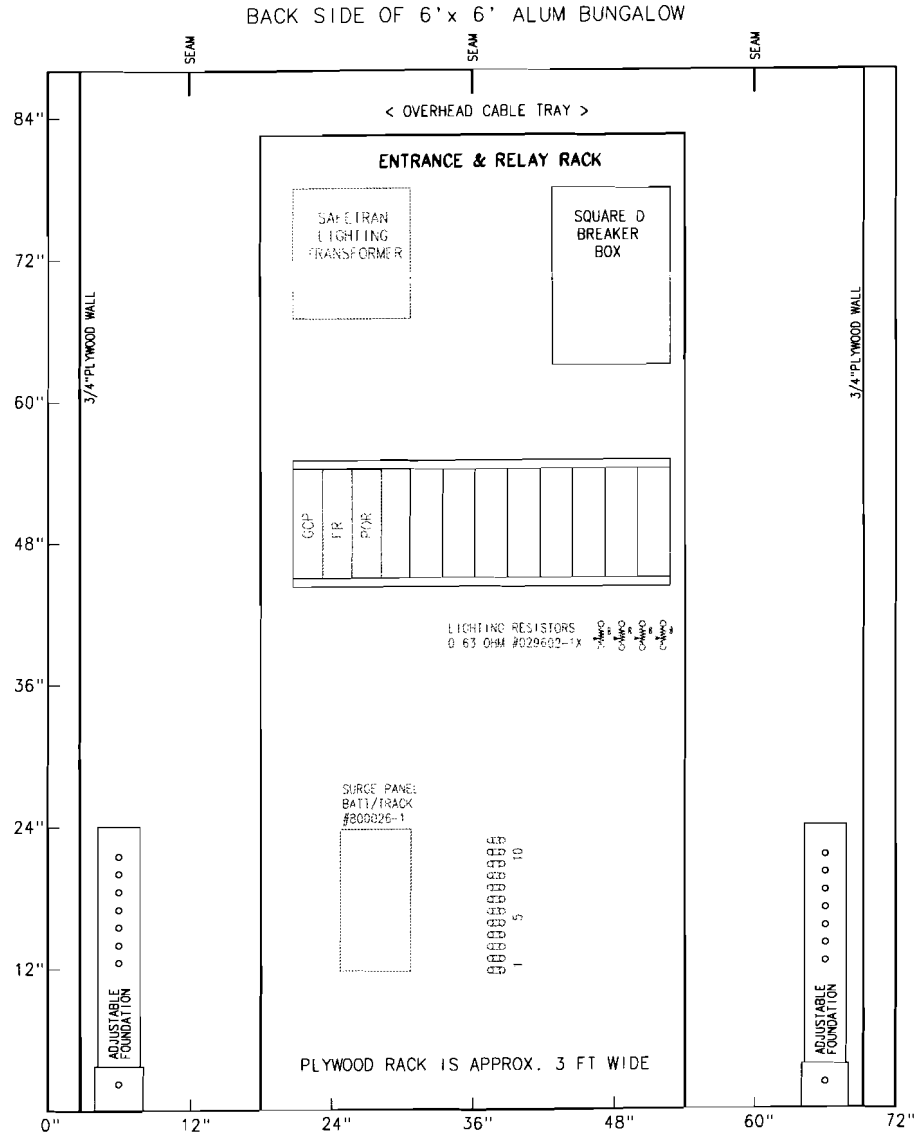

KANSAS CITY SOUTHERN LINES SIGNAL DEPT.

DWG. NO. SD-33-2-064.13R

LOCATION TUNISON AVENUE
WHITE HALL, IL

FILE SD-33-5-064.13
DOT NO. 294-607L
MILE POST 064.13

REVISION BLOCK

ORANGE OUT PAGE

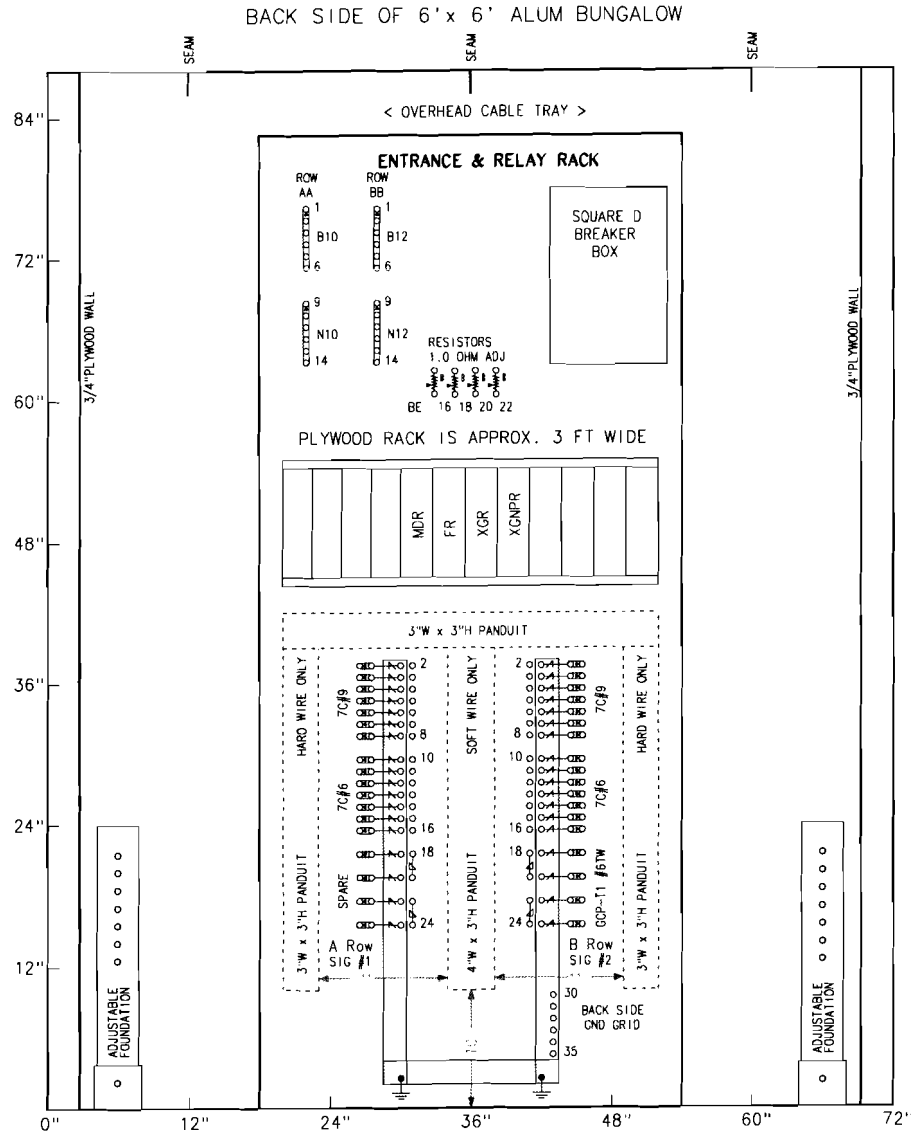

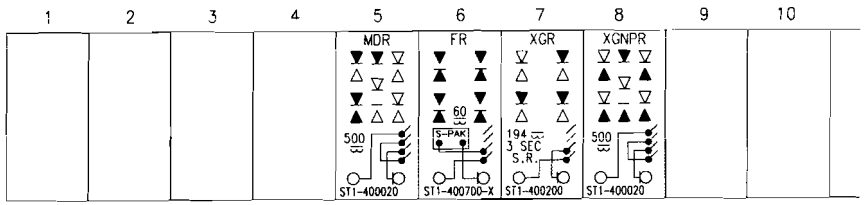

AA & BB BATTERY BUSS MATERIAL:

2 EA. UNIVERSAL TERMINAL BLOCK (12-POST) #023390-11X
16 EA. 1"FLAT CONNECTING LINK #023839-2
4 EA. 1"INSULATED TEST LINK #024620-1X
(WITH GOLD TEST LINK NUT & CLAMP NUT)

4 EA. RESISTORS 1.0 OHM ADJ, #029602-3X
NEW LIGHTING RESISTORS

ENTRANCE TERMINAL MATERIAL:

8 EA. HEAVY DUTY ARRESTER #022615-1X
4 EA. EQUALIZER ARRESTER #022700-1X
28 EA. CLEARVIEW ARRESTER #022485-28X
36 EA. 4-POINT TERMINALS, TO INCLUDE NUTS, WASHERS AND TEST LINKS: ERICO PART #B2700A2C1WH
3 EA. GROUND BUSS BAR 36", ERICO PART #B2700HC36T
1 EA. UNIVERSAL TERMINAL BLOCK (6-POST) #023390-11-6X
(USED AS RIGHT SIDE GND BUSS E30-E35)

KANSAS CITY SOUTHERN LINES SIGNAL DEPT.

DWG. NO. SD-33-2-064.13R1

LOCATION TUNISON AVENUE
WHITE HALL, IL

FILE SD-33-5-064.13
DOT NO. 294-607L
MILE POST 064.13

REVISION BLOCK

BLUE IN PAGE

FRONT SIDE OF 6'x 6' ALUM BUNGALOW

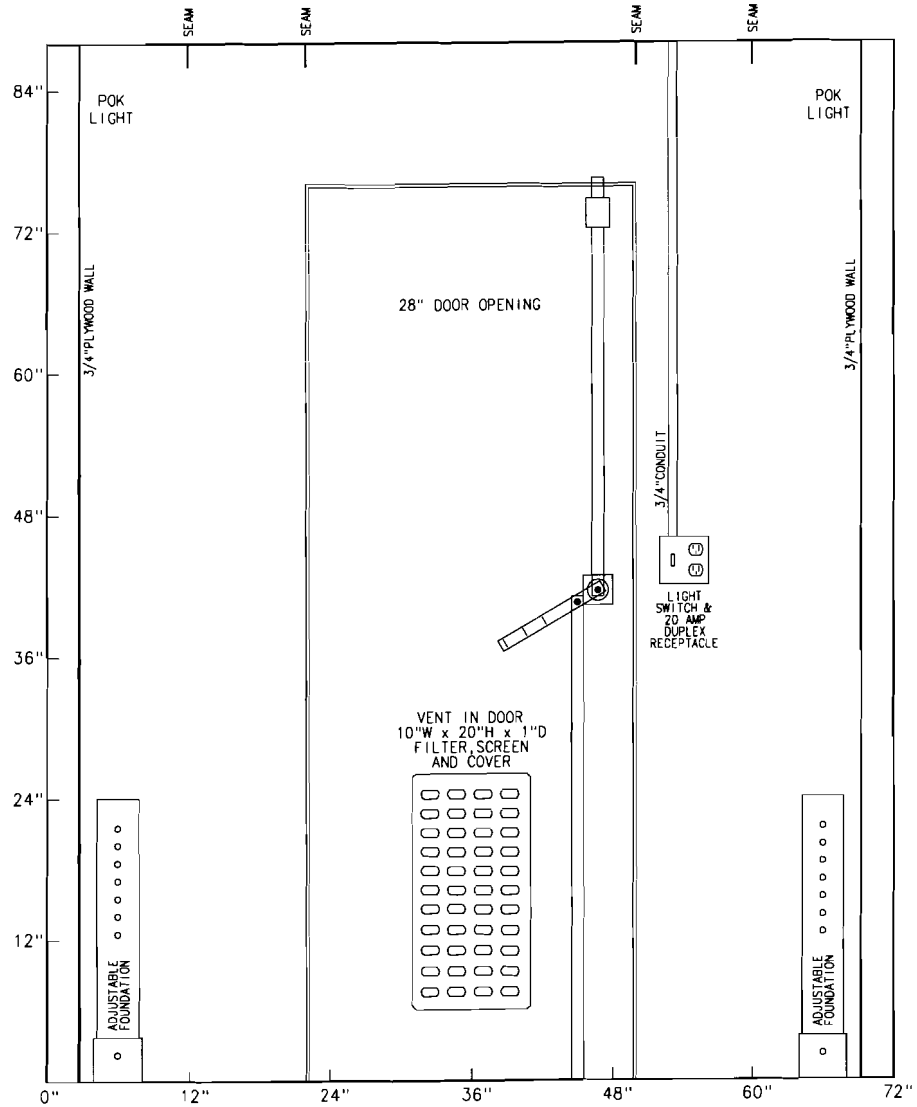

REVISION BLOCK

KANSAS CITY SOUTHERN LINES SIGNAL DEPT.

DWG. NO. SD-33-2-064.13S

LOCATION TUNISON AVENUE
WHITE HALL, IL

FILE SD-33-5-064.13
DOT NO. 294-607L
MILE POST 064.13

TOP VIEW OF 6'x 6' ALUM BUNGALOW

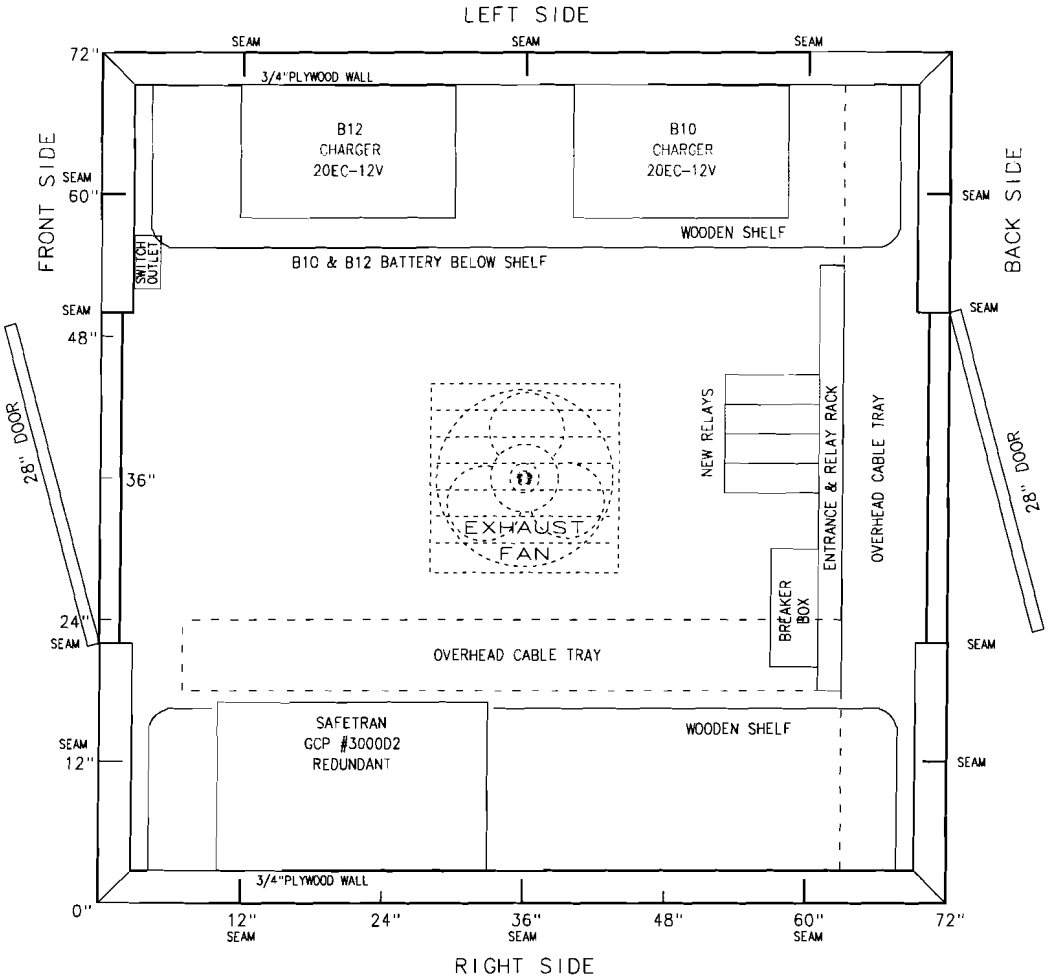

KANSAS CITY SOUTHERN LINES SIGNAL DEPT.

DWG. NO. SD-33-2-064.13T

LOCATION TUNISON AVENUE
WHITE HALL, IL

FILE SD-33-5-064.13
DOT NO. 294-607L
MILE POST 064.13

REVISION BLOCK