STATE OF ILLINOIS

ILLINOIS COMMERCE COMMISSION
TRANSPORTATION DIVISION / RAIL SAFETY SECTION

Michael E. Stead — *Rail Safety Program Administrator*

October 02, 2008

Mr. Hal Gibson
Principal Engineer, Public Projects
500 Water Street, 13th Floor
Jacksonville, FL 32202

Dear Mr. Gibson:

This letter has reference to the CSX Transportation Inc. plans with revisions dated September 15, 2008, Form 1 notice dated September 16, 2008, for proposed extension of gate arm lengths to previously approved plans under X-Resolution 12767 dated September 03, 2008 at US 6 (**AAR/DOT #608232Y, railroad milepost 14.13-RIM**) highway-rail grade crossing in Channahon, Will County, Illinois

This office takes exception to the proposed modifications and therefore the Form 1 notice dated September 16, 2008 is not approved. The previously approved plans under X-Resolution 12767 dated September 03, 2008, without extending gate arms beyond the center of the roadway is still in effect.

Very truly yours,

Michael E. Stead
Rail Safety Program
Administrator

rlb

527 East Capitol Avenue, Springfield, Illinois 62701
Telephone [217] 782-7660 Fax [217] 785-7404 TDD ("V/TTY") [217] 524-4915
www.icc.illinois.gov

COPY

CSX TRANSPORTATION

500 Water St
13th Floor
Jacksonville, FL 32202
EMAIL Hal_Gibson@csx.com
PHONE (904) 359-1048
FAX (904) 366-4042

X.12767

Hal A. Gibson, Jr.
Principal Engineer, Public Projects

RECEIVED
SEP 22 2008
Illinois Com...

September 18, 2008

Illinois Commerce Commission
Rod Bergeron
Railroad Division
527 East Capitol Ave.
Springfield, IL 62701

Subject: Rockdale, Will County, IL: Installation of flashing lights, gates and circuitry at US 6, DOT 608232Y, MP BIF 46.30, OP# IL0245, T08-0122, X-12767

Dear Mr. Bergeron:

Enclosed is a signed copy of the Form 1 for the subject project. CSX designed the gate arms at the standard length of 22' and 18'. Per conversation with Mr. Andy Rabadi at the Illinois Department of Transportation (IDOT) on Monday, September 15, 2008, the original request from IDOT was for the gate arms to be 28' and 22' respectively. This information is noted in exhibit A of the Agreement.

The original Form 3 was submitted to you on August 20, 2008 an was approved on September 3, 2008. CSX has updated the circuit plans to reflect the change to the gate arms. We have also enclosed a copy of the circuit plans for your review.

If you have any questions, or would like to discuss this project, please contact me.

Thank you,

Hal Gibson

CC: A. Rabadi, IDOT (as information)
D. Knopsnider (as information)
M. Blaschke (as information)

DOCKETED

SEP 22 2008

COPY

STATE OF ILLINOIS
Illinois Commerce Commission
Transportation Division

RECEIVED
SEP 2 2 2008
Illinois Commerce Commission
RAIL SAFETY SECTION

Form 1

Notice of proposed minor change in crossing protection under 92 Illinois Administrative Code 1535.400(b) and (c).

Date: **September 16, 2008**

To the Illinois Commerce Commission:

The **CSX Transportation company** hereby gives notice that it proposes to make a change, designated as a minor change under 92 Illinois Administrative Code 1535.400 (b) and (c) in crossing Number **608232Y** located near **Rockdale**, being the crossing of **US 6**, with **CSXT**. A full statement of the proposed changes are as follows:

Gate Lengths have been changed to 28' and 22' per request by Andy Rabadi.

CSX Transportation

By _____

Hal Gibson
Principal Engineer
904-359-1048

(Attach additional sheet if necessary)

Completion of this form is necessary to accomplish the statutory purpose as outlined in the Illinois Commercial Transportation Law, Section 18c-7401. This form has been approved by Forms Management Center.

DOCKETED

SEP 2 2 2008

RECEIVED
SEP 22 2008
Illinois Commerce Commission
RAIL SAFETY SECTION

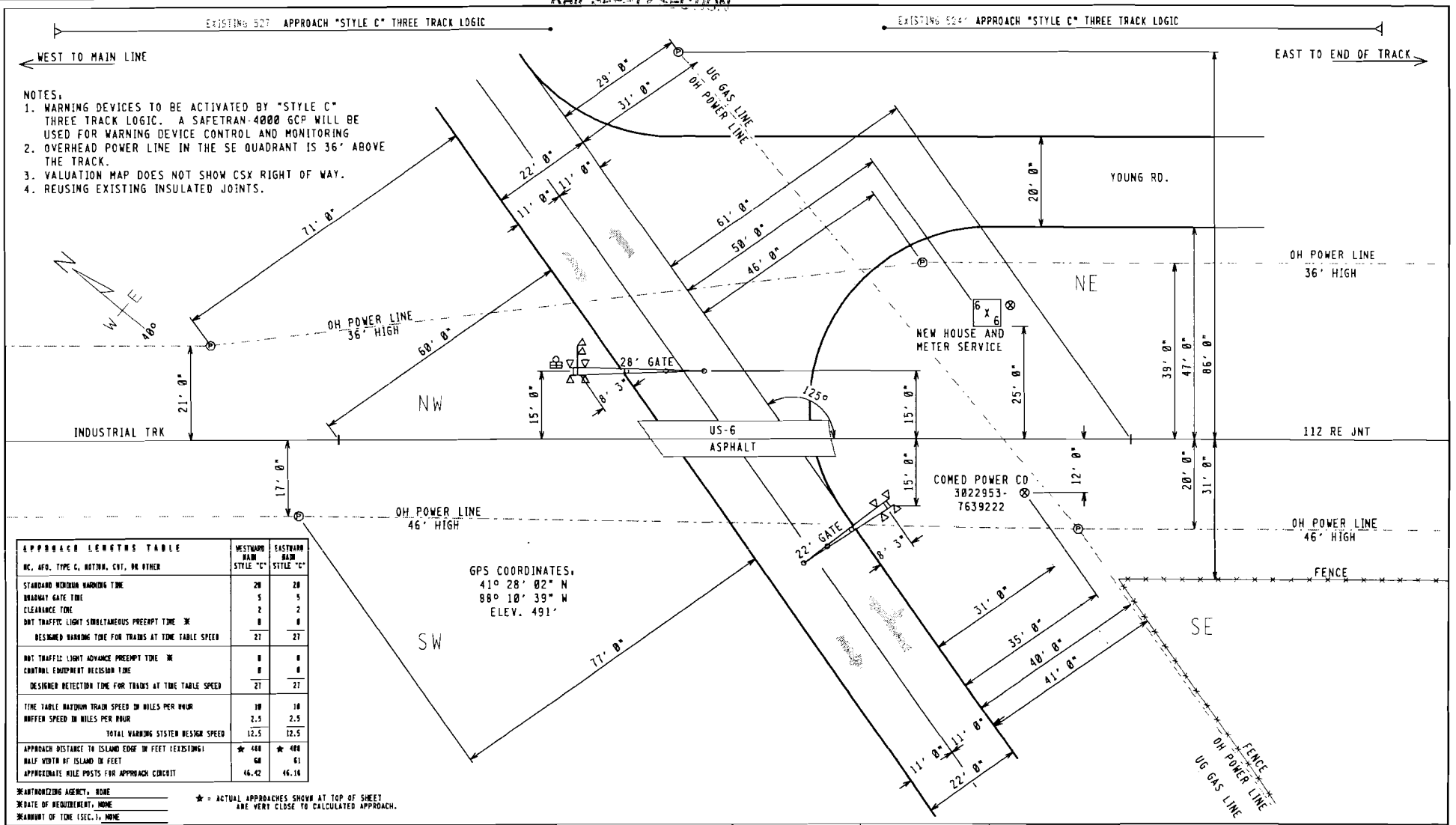

APPROACH LENGTHS TABLE MC, AFO, TYPE C, MOTION, CNT, OR OTHER	WESTBOUND MAIN STYLE "C"	EASTBOUND MAIN STYLE "C"
STANDARD MINIMUM WARNING TIME	20	20
BROADWAY GATE TIME	5	5
CLEARANCE TIME	2	2
DOT TRAFFIC LIGHT SIMULTANEOUS PREEMPT TIME *	0	0
DESIGNED WARNING TIME FOR TRAINS AT TIME TABLE SPEED	27	27
DOT TRAFFIC LIGHT ADVANCE PREEMPT TIME *	0	0
CONTROL EQUIPMENT DECISION TIME	0	0
DESIGNED DETECTION TIME FOR TRAINS AT TIME TABLE SPEED	27	27
TIME TABLE MAXIMUM TRAIN SPEED IN MILES PER HOUR	10	10
BUFFER SPEED IN MILES PER HOUR	2.5	2.5
TOTAL WARNING SYSTEM DESIGN SPEED	12.5	12.5
APPROACH DISTANCE TO ISLAND EDGE IN FEET (EXISTING)	★ 460	★ 400
HALF WIDTH OF ISLAND IN FEET	68	61
APPROXIMATE MILE POSTS FOR APPROACH CIRCUIT	46.42	46.16

*AUTHORIZING AGENCY: NONE
*DATE OF REQUIREMENT: NONE
*AMOUNT OF TIME (SEC.): NONE

★ = ACTUAL APPROACHES SHOWN AT TOP OF SHEET ARE VERY CLOSE TO CALCULATED APPROACH.

FILE NAME: BIF04630.H01	REVISION DATES	PRODUCED FOR:	PRODUCED BY:	LEGEND	GUARD RAIL	METER SERVICE ⊗	STREET NAME: US-6
DATE DRAWN: 06-02-2008	06-16-08 MLS	CSX TRANSPORTATION	SAFETRAN systems	CSX ROW	O.H. POWER	POLE Ⓟ	CITY & STATE: ROCKDALE, IL
DRAWN BY: GARY CARLEE	09-15-08 MLS	RAIL TRANSPORT GROUP ENGINEERING	7775 BAYMEADOWS WAY	R/R POLELINE	FENCE	FIRE PLUG Ⓕ	PROJECT #: IL2008014
CHECKED BY: ERNESTO PROSPERO	- -	COMMUNICATIONS AND SIGNALS	SUITE 250	GAS	WATER	SEWER CAP Ⓢ	OP #: IL0245
SSC #: JXXD00633	- -		JACKSONVILLE, FL 32256	FIBER OPTIC	SEWER	GAS VENT Ⓥ	DOT #: 608232Y

PROPOSED CROSSING LAYOUT
SCALE: 1" = 20'

INDEX

CONTENTS

SH. NO.		REVISION NO. 1	2	3	4	5	6	7	8	9
I01	INDEX AND REVISIONS	✓								
S01	TRACK AND SIGNAL PLAN	✓								
P01	MINIMUM PROGRAM STEPS REPORT CWE-30	✓								
E01	POWER DISTRIBUTION	✓								
C01	DETECTION DEVICE CONSIST CWE-30	✓								
C02	DETECTION CIRCUITRY CWE-30	✓								
C03	DETECTION CIRCUITRY CWE-30	✓								
C04	CROSSING WARNING DEVICE GATE CIRCUITRY	✓								
C05	CROSSING WARNING DEVICE LIGHT CIRCUITRY	✓								
C06	CROSSING WARNING DEVICE CIRCUITRY	✓								
C07	SEAR II: CONFIGURATION & FUNCTIONS	✓								
C08	STYLE C CIRCUITS	✓								

✓ = PLANS SENT TO FIELD (DISTRIBUTED)

✓ = PLANS AS-IN-SERVICED (UP TO DATE)

NEW WORK

SAFETRAN systems

PROJECT #: IL2000014
DES/CHKD BY: MLS/SWS
DATE: 06-16-08

= NOTE

4X.I01
REV. 02-29-08

REVISIONS

REV. NO.	PROJECT NO.	DESIGN DATE	IN SERVICE DATE	REVISION DATE
1	IL2000014	06-16-08		

TO BE COMPLETED ON A.I.S.

CSX TRANSPORTATION

RAIL TRANSPORT GROUP ENGINEERING
COMMUNICATIONS AND SIGNALS

AMOCO INDUSTRIAL LEAD

US-6 600232T

INDEX AND REVISIONS

ROCKDALE, IL M.P. BIF-46.30

DESIGNED	DIGITIZED	CHECKED	DATE
SAF/MLS	SAF/MLS	SAF/SWS	06-16-08

DESIGN DATE	REV. NO.	DRAWING	SHEET NO	FILE	SHEET
06-16-08	1	-----	-----	BIF04630	I01

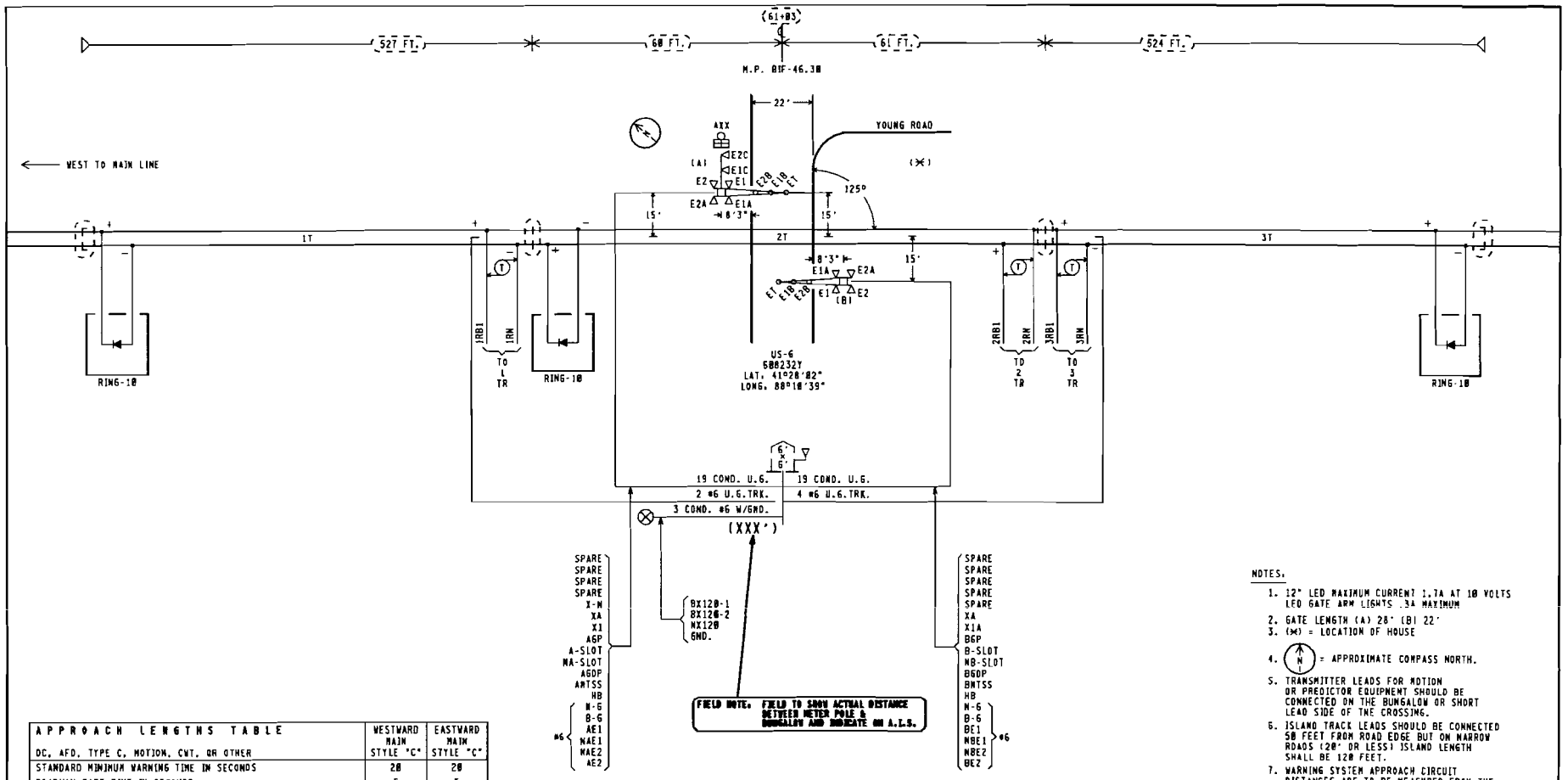

NOTES.

1. 12" LED MAXIMUM CURRENT 1.7A AT 10 VOLTS LED GATE ARM LIGHTS .3A MAXIMUM
2. GATE LENGTH (A) 28' (B) 22'
3. (✱) = LOCATION OF HOUSE
4. (N) = APPROXIMATE COMPASS NORTH.
5. TRANSMITTER LEADS FOR MOTION OR PREDICTOR EQUIPMENT SHOULD BE CONNECTED ON THE BUNGALOW OR SHORT LEAD SIDE OF THE CROSSING.
6. ISLAND TRACK LEADS SHOULD BE CONNECTED 50 FEET FROM ROAD EDGE BUT ON NARROW ROADS (20' OR LESS) ISLAND LENGTH SHALL BE 120 FEET.
7. WARNING SYSTEM APPROACH CIRCUIT DISTANCES ARE TO BE MEASURED FROM THE ISLAND TRACK CONNECTIONS.

APPROACH LENGTHS TABLE DC, AFD, TYPE C, MOTION, CWT, OR OTHER	WESTWARD MAIN STYLE "C"	EASTWARD MAIN STYLE "C"
STANDARD MINIMUM WARNING TIME IN SECONDS	20	20
ROADWAY GATE TIME IN SECONDS	5	5
CLEARANCE TIME IN SECONDS	2	2
DOT TRAFFIC LIGHT SIMULTANEOUS PREEMPT TIME IN SECONDS ✱	0	0
DESIGNED WARNING TIME FOR TRAINS AT TIME TABLE SPEED	27 SEC.	27 SEC.
DOT TRAFFIC LIGHT ADVANCE PREEMPT TIME IN SECONDS ✱	0	0
CONTROL EQUIPMENT DECISION TIME IN SECONDS	0	6
DESIGNED DETECTION TIME FOR TRAINS AT TIME TABLE SPEED	27 SEC.	27 SEC.
TIME TABLE MAXIMUM TRAIN SPEED IN MILES PER HOUR	10	10
BUFFER SPEED IN MILES PER HOUR	2.5	2.5
TOTAL WARNING SYSTEM DESIGN SPEED IN MILES PER HOUR	12.5	12.5
APPROACH DISTANCE TO ISLAND EDGE IN FEET	★ 488	★ 488
HALF WIDTH OF ISLAND IN FEET	60	61
APPROXIMATE MILE POSTS FOR APPROACH CIRCUIT	46.42	46.18

✱AUTHORIZING AGENCY. NONE
✱DATE OF REQUIREMENT. NONE
✱AMOUNT OF TIME (SEC.). NONE

★ = ACTUAL APPROACHES SHOWN AT TOP OF SHEET ARE VERY CLOSE TO CALCULATED APPROACH.

NEW WORK EXCEPT
(- - -) = EXISTING

SAFETRAN systems
PROJECT #. 112086014
DES/CHKD BY. MLS/SWS
DATE. 06-16-08

(⬭) = NOTE

4K.S01
REV. 12-22-06

CSX TRANSPORTATION
RAIL TRANSPORT GROUP ENGINEERING
COMMUNICATIONS AND SIGNALS

AMOCO INDUSTRIAL LEAD
US-6 608232Y
TRACK AND SIGNAL PLAN
ROCKDALE, IL M.P. BIF-46.30

DESIGNED	DIGITIZED	CHECKED	DATE
SAF/MLS	SAF/MLS	SAF/SWS	06-16-08

DESIGN DATE	REV. NO.	DRAWING	SHEET NO	FILE	SHEET
06-16-08	1	-----	-----	BIF04630	S01

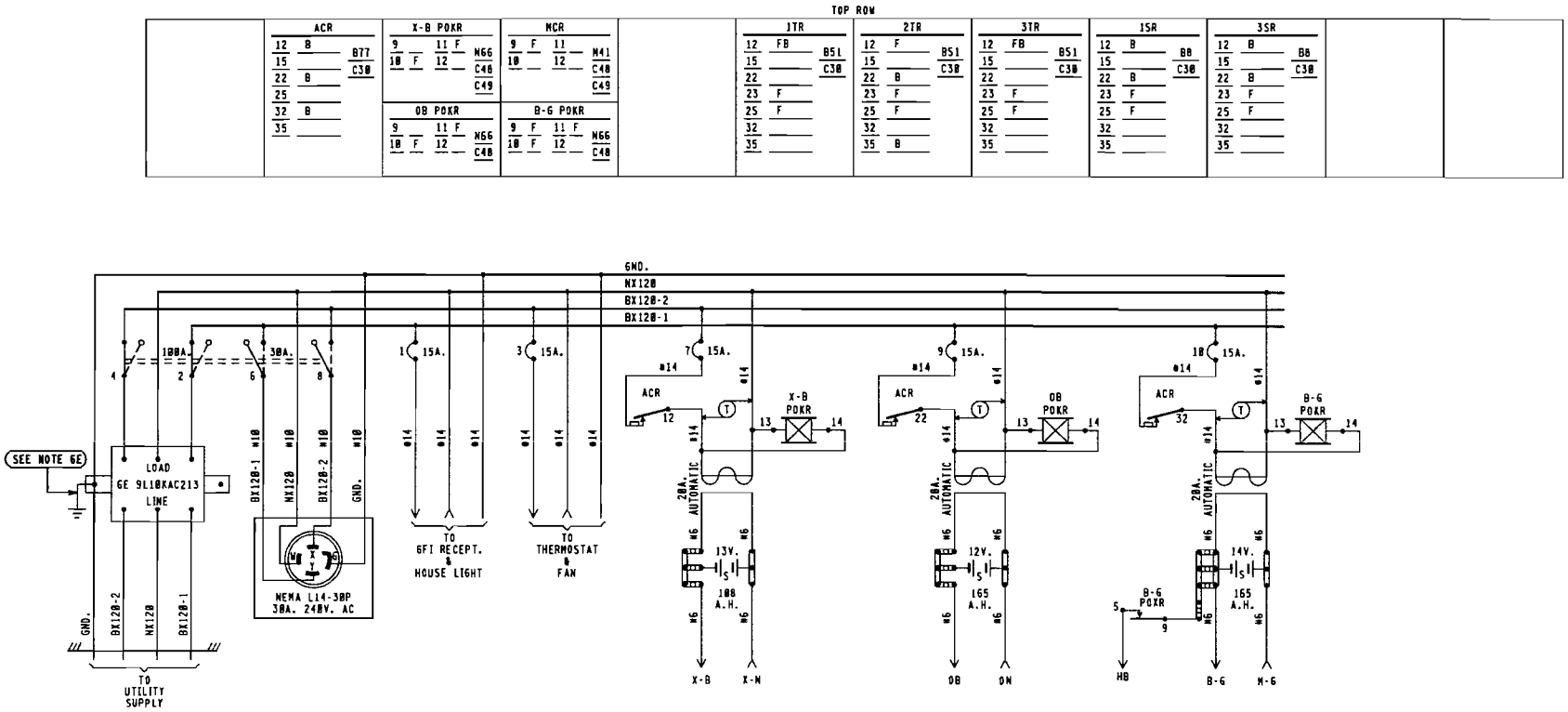

BX120-1	BX120-2
16.0 AMPS	8.0 AMPS

MAXIMUM LOAD
CALCULATED PER SS360

NOTES:

1 - REFERENCES ARE PER SCMS-13.
2 - ARRESTERS ARE PER SS382.
3 - SHELF RELAY PLACEMENT ON CONSIST CHART HAS NO SIGNIFICANCE.
4 - PLUG-IN RELAYS ARE VIEWED FROM THE FRONT OF RACK.
5 - BATTERY A.H. CAPACITY SHOWN IS THE MINIMUM REQUIREMENT.
6 - WIRING
   A - FEED TO ALL BUSSES, LIGHT CIRCUITS, MOTOR CIRCUITS TO BE #10 FLEX.
   B - 120-VOLT FEED FROM ENTRANCE TO POWER BUSS TO BE #10 FLEX.
   C - ALL TRACK WIRES TO BE #10 FLEX.
   D - ALL OTHERS TO BE #16 FLEX UNLESS NOTED.
   E - GROUND WIRE NOT NECESSARY WHEN GE ARRESTER IS MOUNTED ON GROUND PLANE OR METAL ENCLOSURE AFFIXED DIRECTLY TO BUNGALOW METALLIC STRUCTURAL MEMBER.
7 - CIRCUIT INTERRUPTERS 2 & 4 ARE MECHANICALLY INTERLOCKED WITH CIRCUIT INTERRUPTERS 6 & 8.

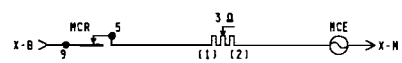

NEW WORK

SAFETRAN systems

PROJECT #: IL2000014
DES/CHKD BY: MLS/SWS
DATE: 06-16-08

= NOTE

6'X 6' RELAY HOUSE W/FARADAY SHIELD

CSX TRANSPORTATION
RAIL TRANSPORT GROUP ENGINEERING
COMMUNICATIONS AND SIGNALS

AMOCO INDUSTRIAL LEAD
US-G 600232Y
POWER DISTRIBUTION
ROCKDALE, IL M.P. BIF-46.30

4000GCP.E01
REV. 02-29-08

DESIGNED	DIGITIZED	CHECKED	DATE
SAF/MLS	SAF/MLS	SAF/SWS	06-16-08

DESIGN DATE	REV. NO.	DRAWING	SHEET NO	FILE	SHEET
06-16-08	1	-----	-----	BIF04630	E01

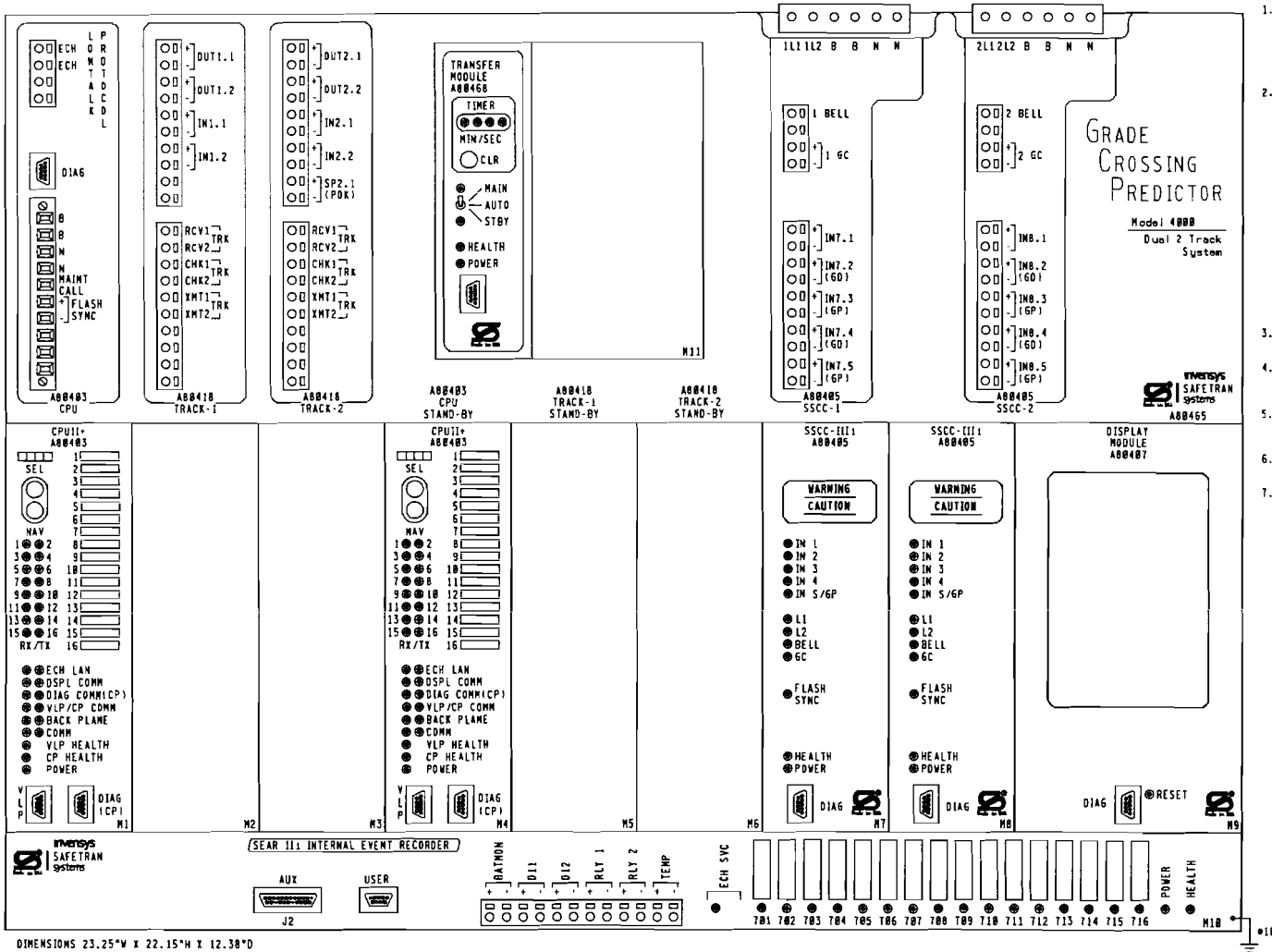

GCP 4000 APPLICATION NOTES.

1. THE GRADE CROSSING PREDICTOR (GCP) IS A MODULAR MICROPROCESSOR CONTROLLED SYSTEM THAT IS DEPLOYED TO CONTINUALLY MONITOR THE APPROACHES TO RAILROAD GRADE CROSSINGS AND TO CONTROL THE LAMPS, GATES AND BELLS ASSOCIATED WITH THOSE CROSSINGS. WHEN EQUIPPED WITH THE SEAR II1 MODULE THE GCP 4000 WILL RECORD EVENTS AND REPORT ALARMS WHEN CONNECTED TO AN OFFICE SYSTEM.

2. THE GCP 4000 GCP (A80465) IS A TWO TRACK REDUNDANT UNIT CAPABLE OF DRIVING 4 INDEPENDENT FLASHER AND GATE SIGNALS AND RECORDING EVENTS AND REPORTING ALARMS. THE STANDARD A80465 INCLUDES THE FOLLOWING MODULES.

SLOT	MODULE	FUNCTION	PART NO.
M1	CPU-II+	MAIN	A80403
M2	PANEL	NONE	D39325
M3	PANEL	NONE	D39325
M4	CPU-II+	STANDBY	A80403
M5	PANEL	NONE	D39325
M6	PANEL	NONE	D39325
M7	SSCC-III1	A SIGNAL	A80405
M8	SSCC-III1	B SIGNAL	A80405
M9	DISPLAY MODULE		A80407
TOP CENTER	TRANSFER UNIT		A80468
LOWER BAY	SEAR II1	RECORDER	A80410
OPTIONAL MODULES.			A80413
RIO MODULE			

3. EACH TRACK MODULE HAS TWO PROGRAMMABLE INPUTS AND TWO PROGRAMMABLE OUTPUTS.

4. THE SEAR II1 INTERNAL EVENT RECORDER HAS INPUTS FOR ONE BATTERY MONITOR, TWO NON-VITAL INPUTS AND TWO PROGRAMMABLE RELAY DRIVES (HEEL/FRONT).

5. LOCATED ON THE FRONT OF EACH MODULE THERE ARE LED LIGHTS TO INDICATE THE ACTIVITY OF CERTAIN FUNCTIONS OCCURRING INSIDE THE GCP.

6. BETWEEN SLOT 1 & 2 THERE IS A CHASSIS INDENTIFICATION CHIP (CIC) SOCKET AND AN ECD CONNECTOR (DB-25 FEMALE).

7. UPON THE FAILURE OF A MODULE IN SLOTS M1-M3 THE AUTOMATIC TRANSFER UNIT SWITCHES TO THE STANDBY MODULES IN SLOTS M4-M6.

NEW WORK

SAFETRAN systems

PROJECT #: IL2000014
DES/CHKD BY: MLS/SWS
DATE: 06-16-00

CSX TRANSPORTATION

RAIL TRANSPORT GROUP ENGINEERING
COMMUNICATIONS AND SIGNALS

AMOCO INDUSTRIAL LEAD

US-6 600232Y

DETECTION DEVICE CONSIST CWE-30

ROCKDALE, IL M.P. BIF-46.30

4K-CHASSIS.DGN
REV. 12-22-06

DESIGNED	DIGITIZED	CHECKED	DATE
SAF/MLS	SAF/MLS	SAF/SWS	06-16-00

DESIGN DATE	REV. NO.	DRAWING	SHEET NO	FILE	SHEET
06-16-00	1	-----	-----	BIF04630	C01

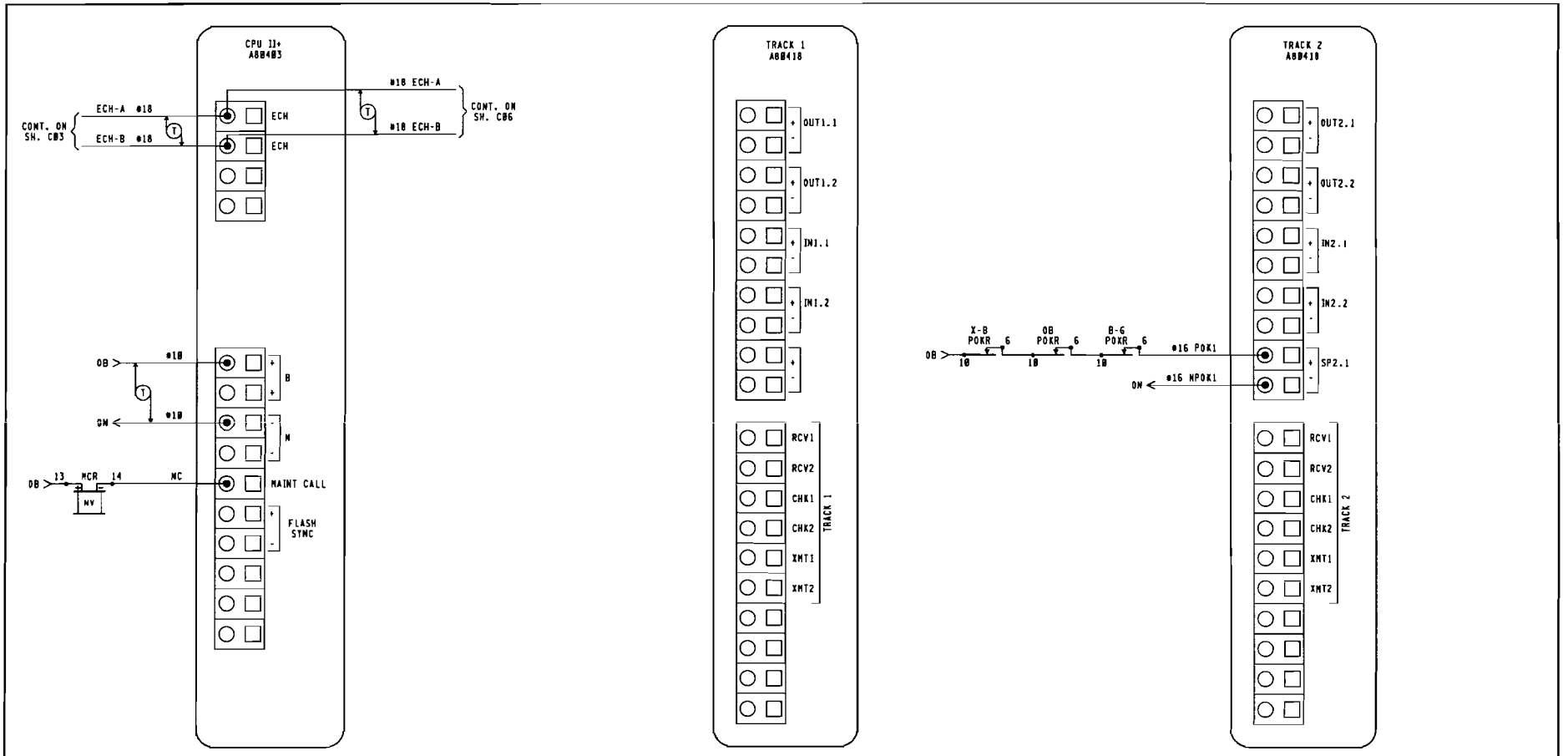

NOTE:

ECHELON CONNECTIONS NOT TO EXCEED 53' IN LENGTH AND TOTAL LENGTH CONBINED NOT TO EXCEED 430' WITH A MAXIMUM OF 8 NODES. RECOMMEND USE BELDEN WIRE CABLE #8461 OR EQUIVALENT.

NEW WORK

SAFETRAN systems

PROJECT #: IL2000014
DES/CHKD BY: MLS/SWS
DATE: 06-16-00

CSX TRANSPORTATION
RAIL TRANSPORT GROUP ENGINEERING
COMMUNICATIONS AND SIGNALS

AMOCO INDUSTRIAL LEAD

US-6 600232Y

DETECTION CIRCUITRY CWE-30

ROCKDALE, IL M.P. BIF-46.30

4K-TERMINALS.DGN
REV. 02-29-00

DESIGNED	DIGITIZED	CHECKED	DATE
SAF/MLS	SAF/MLS	SAF/SWS	06-16-00

DESIGN DATE	REV. NO.	DRAWING	SHEET NO	FILE	SHEET
06-16-00	1	-----	-----	BIF04630	C02

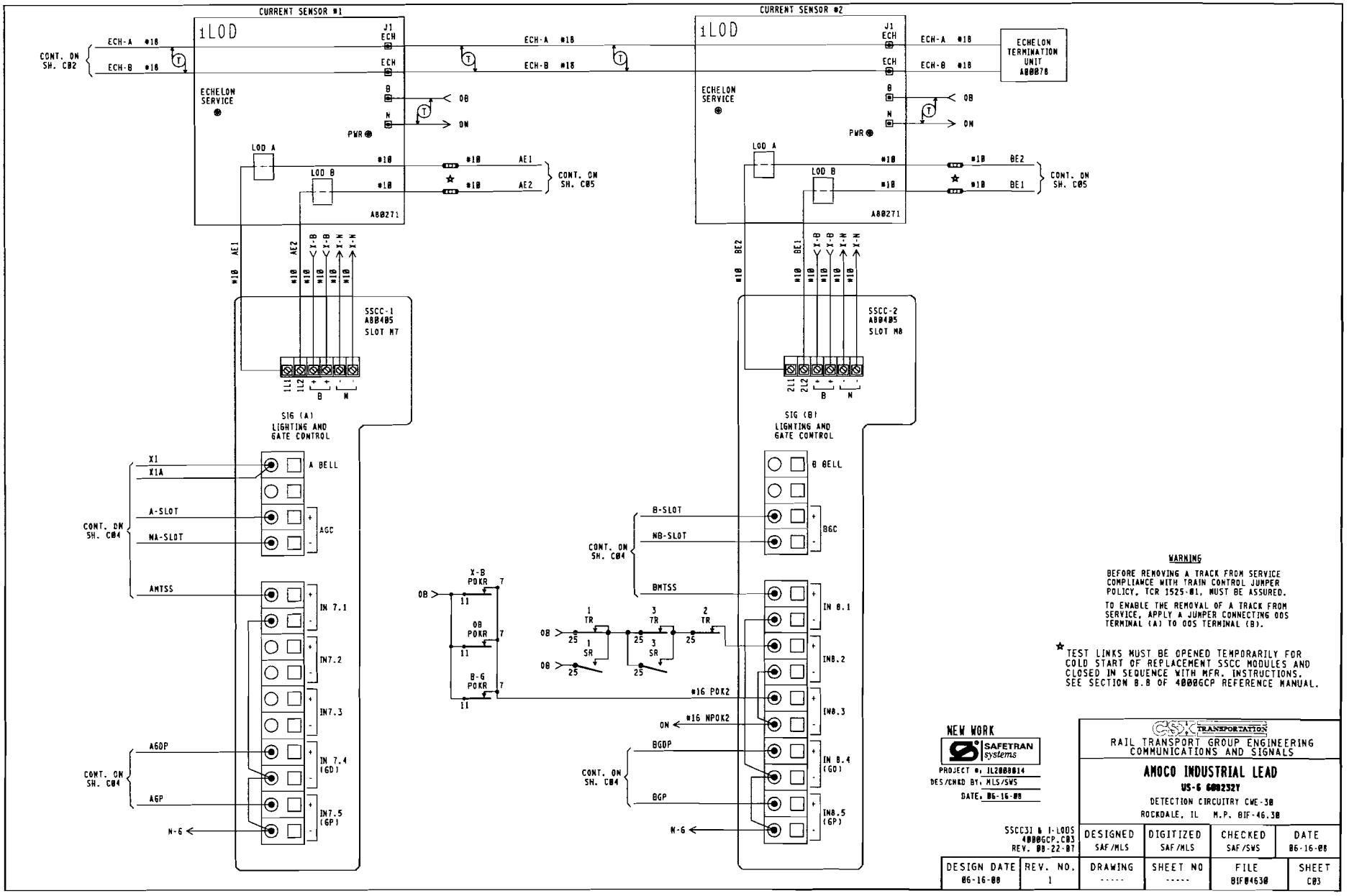

WARNING

BEFORE REMOVING A TRACK FROM SERVICE COMPLIANCE WITH TRAIN CONTROL JUMPER POLICY, TCR 1525-01, MUST BE ASSURED.

TO ENABLE THE REMOVAL OF A TRACK FROM SERVICE, APPLY A JUMPER CONNECTING OOS TERMINAL (A) TO OOS TERMINAL (B).

★ TEST LINKS MUST BE OPENED TEMPORARILY FOR COLD START OF REPLACEMENT SSCC MODULES AND CLOSED IN SEQUENCE WITH MFR. INSTRUCTIONS. SEE SECTION 8.8 OF 4000GCP REFERENCE MANUAL.

NEW WORK

SAFETRAN systems

PROJECT #: IL2000014
DES/CHKD BY: MLS/SWS
DATE: 06-16-00

CSX TRANSPORTATION

RAIL TRANSPORT GROUP ENGINEERING
COMMUNICATIONS AND SIGNALS

AMOCO INDUSTRIAL LEAD

US-6 600232Y

DETECTION CIRCUITRY CWE-38

ROCKDALE, IL M.P. BIF-46.38

SSCC31 & I-LODS
4000GCP.C03
REV. 00-22-07

DESIGNED	DIGITIZED	CHECKED	DATE
SAF/MLS	SAF/MLS	SAF/SWS	06-16-00

DESIGN DATE	REV. NO.	DRAWING	SHEET NO	FILE	SHEET
06-16-00	1	-----	-----	BIF04630	C03

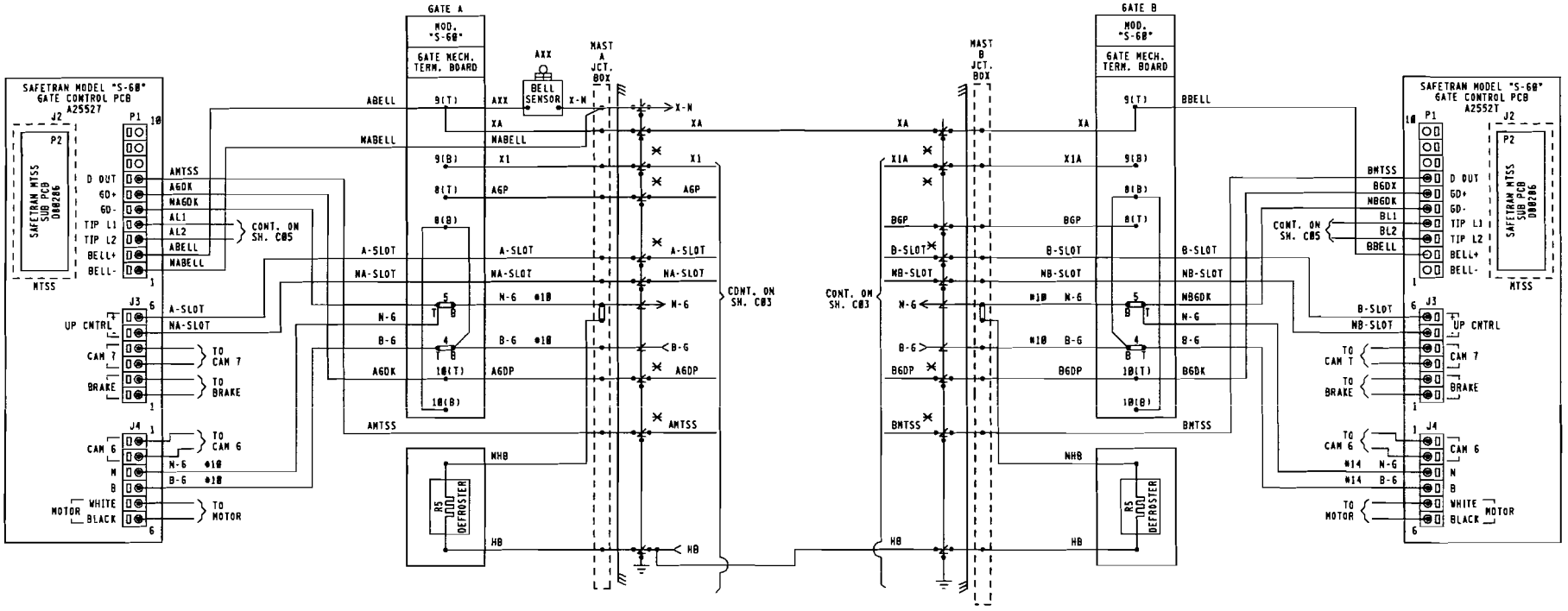

NOTES:
1. ✕ = TEST LINKS MUST BE OPEN TEMPORARILY FOR COLD START OF REPLACEMENT SSCC MODULES AND AND CLOSED IN SEQUENCE WITH MFR. INSTRUCTIONS. SEE SECTION 8.8 OF 40006CP REFERENCE MANUAL.
2. = TERMINAL IN JCT. BOX BASE
3. ALL WIRING #16 UNLESS NOTED OTHERWISE.

NEW WORK

SAFETRAN systems

PROJECT #: IL2008014
DES/CHKD BY: MLS/SWS
DATE: 06-16-08

CSX TRANSPORTATION
RAIL TRANSPORT GROUP ENGINEERING
COMMUNICATIONS AND SIGNALS

AMOCO INDUSTRIAL LEAD

US-6 608232T

CROSSING WARNING DEVICE GATE CIRCUITRY
ROCKDALE, IL M.P. BIF-46.30

S60 GATE WIRING.C04A
REV 09-05-07

DESIGNED	DIGITIZED	CHECKED	DATE
SAF/MLS	SAF/MLS	SAF/SWS	06-16-08

DESIGN DATE	REV. NO.	DRAWING	SHEET NO	FILE	SHEET
06-16-08	1	-----	-----	BIF04630	C04

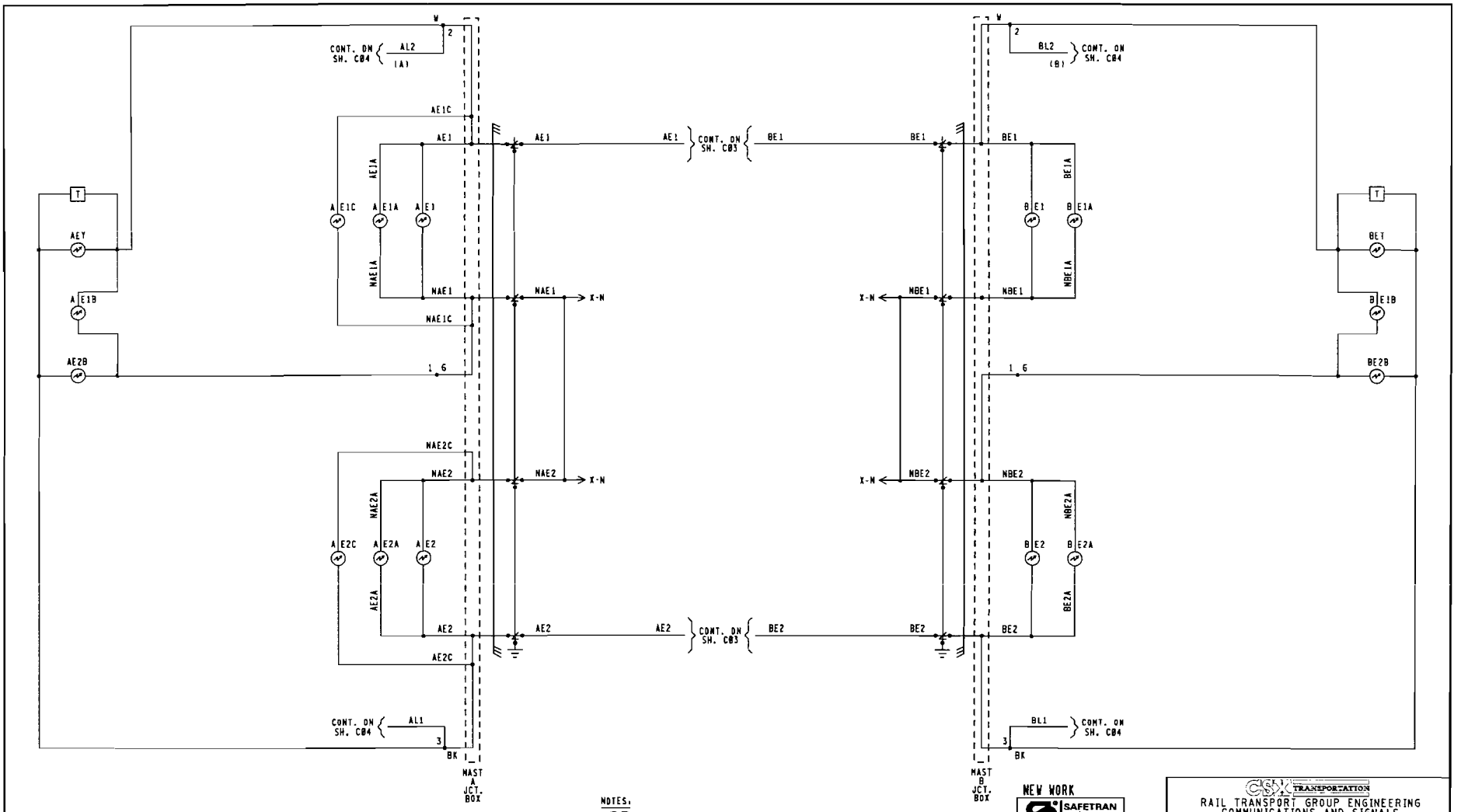

NOTES:

1. [ ] = TERMINAL IN JUNCTION BOX
2. WHEN 7 OR MORE LIGHTS ON A SINGLE STRUCTURE REFER TO SS382 FOR REQUIRED ARRESTERING
3. FEEDS TO ALL BUSSES AND LIGHT CIRCUITS ARE #10 FLEX
4. UNLESS NOTED ALL OTHER WIRING #16
5. CABLING SPECIFICATIONS SHOWN ON SH. S01
6. [T] = TIP SENSOR

NEW WORK

SAFETRAN systems

PROJECT #: IL2008014
DES/CHKD BY: MLS/SWS
DATE: 06-16-08

CSX TRANSPORTATION
RAIL TRANSPORT GROUP ENGINEERING
COMMUNICATIONS AND SIGNALS

AMOCO INDUSTRIAL LEAD

US-G 608232Y

CROSSING WARNING DEVICE LIGHT CIRCUITRY

ROCKDALE, IL M.P. BIF-46.30

4K-LAMP WIRING.DGN
REV. 02-29-08

DESIGNED	DIGITIZED	CHECKED	DATE
SAF/MLS	SAF/MLS	SAF/SWS	06-16-08

DESIGN DATE	REV. NO.	DRAWING	SHEET NO	FILE	SHEET
06-16-08	1	-----	-----	BIF04630	C05

WAYSIDE ACCESS GATEWAY CONFIGURATION	
SITE ATCS ADDRESS	7.125.477.005.07.01 7.125.LLL.GGG.SS.DD
SERIAL INTERFACE	38,400,NONE,8,1/NOFLOW
SERIAL FORMAT	RAW
WAG TEST MODE	DISABLED
ECHELON ADDRESS	01.07
UDP PORTS	5000, 5001, 5002, 5003
ROUTE TABLE EXPIRY	5400 SEC
BROADCAST MEDIUM	IP ETHERNET
TCP PORTS	23, 10023, 6001, 6002
DHCP SERVER	DISABLED
IP ADDRESS	192.168.13.1
TYPE 7 ROUTE LENGTH	12--7RRLLLGGGSS
IP NETWORK MASK	255.255.255.0
WAG CIRCUIT ID	DISABLE
ROUTING REGION DOMAIN 1	OCGSERVER1.JAX.COM
ATCS SERVER UDP PORT NUMBER	6001
TELNET NUMBERS	WAG 6002, SERIAL 10023
DEFAULT GATEWAY IP	192.168.013.031

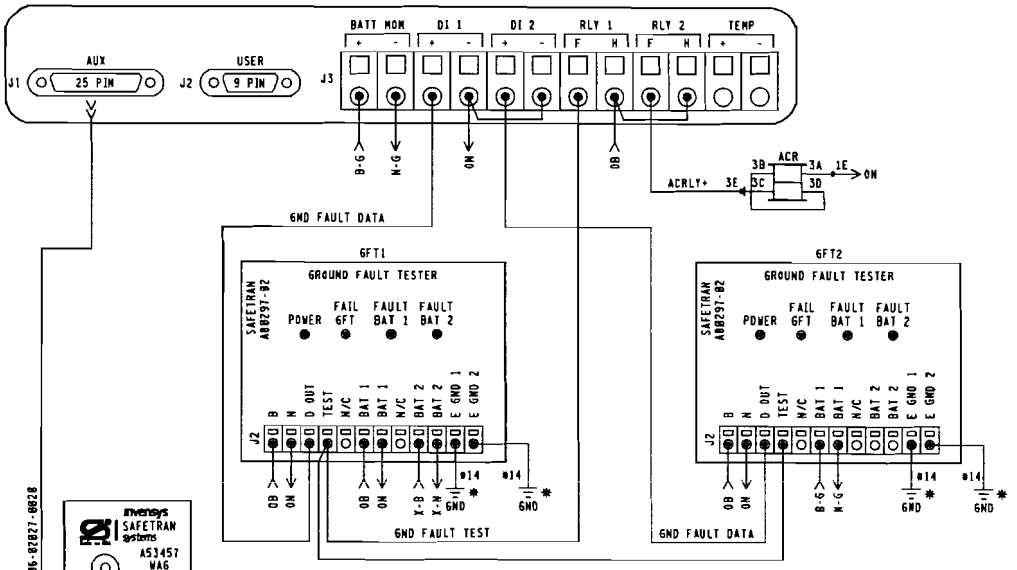

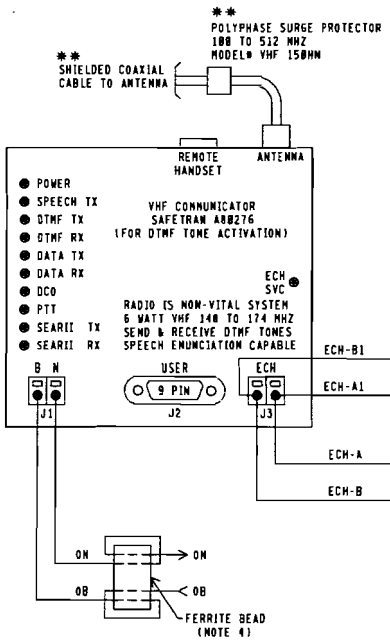

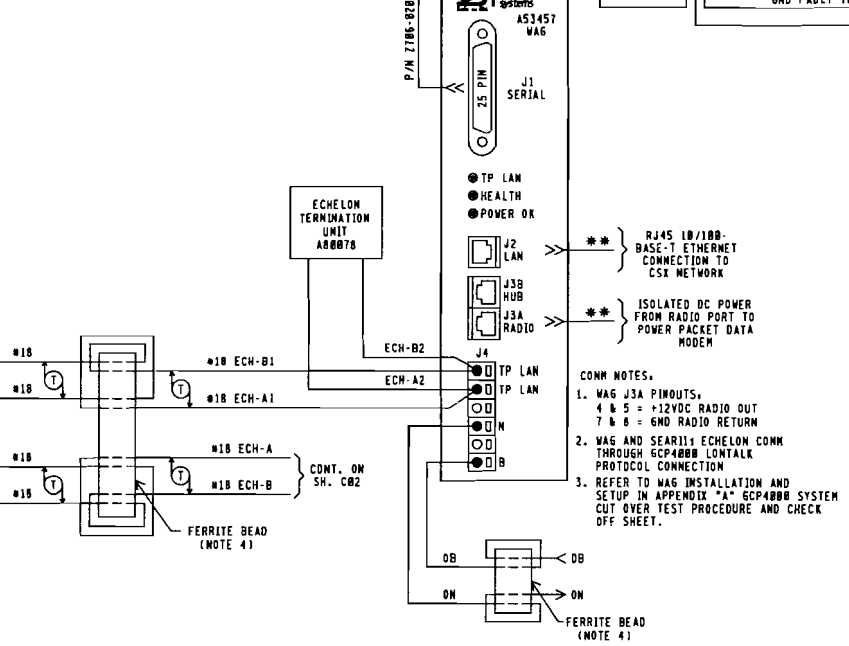

CONN NOTES.

1. WAG J3A PINOUTS.
   4 & 5 = +12VDC RADIO OUT
   7 & 8 = GND RADIO RETURN
2. WAG AND SEAR11i ECHELON CONN THROUGH GCP4000 LONTALK PROTOCOL CONNECTION
3. REFER TO WAG INSTALLATION AND SETUP IN APPENDIX "A" GCP4000 SYSTEM CUT OVER TEST PROCEDURE AND CHECK OFF SHEET.

GCP PROGRAMMING FOR VHF RADIO

REMOTE DTMF CROSSING ACTIVATION (ACTIVATES ENTIRE CROSSING)	
TO ACTIVATE PRESS.	232#
TO DE-ACTIVATE PRESS.	232*
(ACTIVATION WILL TIME OUT AFTER 60 SEC.)	
REMOTE DTMF LIGHTING ACTIVATION (ACTIVATES FLASHING LIGHTS ONLY)	
TO ACTIVATE PRESS.	2321#
TO DE-ACTIVATE PRESS.	2321*
(ACTIVATION WILL TIME OUT AFTER 60 SEC.)	

NOTES.

1. ALL WIRING #16 UNLESS NOTED OTHERWISE.
2. * = EARTH GROUND REF. TERMINALS REQUIRED FOR DETECTION. DO NOT JUMPER TERMINALS. MUST BE CONNECTED TO DIFFERENT POINTS OF BUNGALOW.
3. ** = TO BE PROVIDED BY COMMUNICATIONS
4. LOOP WIRE THROUGH FERRITE BEAD TWICE.

NEW WORK

SAFETRAN systems

PROJECT #. IL2000014
DES/CHKD BY. MLS/SWS
DATE. 06-16-00

CSX TRANSPORTATION
RAIL TRANSPORT GROUP ENGINEERING
COMMUNICATIONS AND SIGNALS

AMOCO INDUSTRIAL LEAD
US-6 6002327
CROSSING WARNING DEVICE CIRCUITRY
ROCKDALE, IL M.P. BIF-46.30

4000GCP.C06
REV. 02-29-00

DESIGN DATE	REV. NO.	DRAWING	SHEET NO	FILE	SHEET
06-16-00	1	-----	-----	BIF04630	C06

DESIGNED	DIGITIZED	CHECKED	DATE
SAF/MLS	SAF/MLS	SAF/SWS	06-16-00

	DEFAULTS AND/OR STYLE	FIELD RECORD
SEAR II: EXECUTIVE PROGRAM	VERSION: 9V725A01	VERSION: _____
APPLICATION PROGRAM (IF LOADED)	VERSION: 9V864A01	VERSION: _____

NOTE TO INSPECTOR: AT IN SERVICE OF SEAR II: OR UPDATE OF ITS INTERNAL EXECUTIVE PROGRAM OR ITS CSXT APPLICATION PROGRAM, THE VERSION NUMBER OF EACH PROGRAM MUST BE INSERTED IN THE BLANK FIELDS.

SITE SET UP PROCEDURE	
FUNCTION	LED DISPLAY
DATE/TIME	XX-XX-XXXX XX:XX:XX
AUTOMACTIC OST ADJUSTMENT	YES
TIME ZONE	EASTERN
SITE NAME	US-6
MILEPOST	BIF-46.30
DOT NUMBER	608232Y
TESTER TYPE	CROSSING
DATE FORMAT	MM-DD-YYYY
TEMP FORMAT	FAHRENHEIT
INDICATE HOLD (SEC)	0
SITE TYPE	COLLECTOR
SITE ATCS ADDRESS	7.125.477.005.99.01 (7.RRR.LLL.GGG.99.01)
POLL ID	1
OFFICE ADDRESS	2.125.00.0000 (2.RRR.NN.DDDD)
FIELD COMM. DEVICE	VHF COMM. (ECHELON)
MODE	GEN/ATCS
WAMS XID	ENABLED
OFFICE COMM. DEVICE	WAG (ECHELON)
USER PORT BAUD	9600
USER PORT DATA BITS	8
USER PORT PARITY	NONE
USER PORT STOP BITS	1
USER PORT FLOW CONTROL	NONE
AUX PORT BAUD	38,400
AUX PORT DATA BITS	8
AUX PORT PARITY	NONE
AUX PORT STOP BITS	1
AUX PORT FLOW CONTROL	NONE
COMM PORT BAUD	9600
COMM PORT DATA BITS	8
COMM PORT PARITY	NONE
COMM PORT STOP BITS	1
COMM PORT FLOW CONTROL	NONE

INSPECTOR NOTE:
CURRENT VALUES MAT VARY DEPENDANT ON FIELD CONDITIONS, MARK UP PER ACTUAL READINGS FOR IN-SERVICE REVISION.

LIT BULB COUNT ON EACH CIRCUIT	NO.	TYPE OF BULB	CURRENT READING IN AMP. AT APPROX. 10.0 V ARRAY VOLTAGE
CURRENT SENSOR (1) AE1, LAMP SET UP	5	☐BULBS ■LED	5.7
CURRENT SENSOR (1) AE2, LAMP SET UP	5	☐BULBS ■LED	5.7
CURRENT SENSOR (2) BE1, LAMP SET UP	4	☐BULBS ■LED	4.0
CURRENT SENSOR (2) BE2, LAMP SET UP	4	☐BULBS ■LED	4.0

VHF RADIO CHANNELS			
1	161.130	5	161.550
2	160.710	6	160.785
3	160.560	7	160.785
4	160.060	8	160.785

NOTE 9

MENU → CONFIGURATION	
MODULE TYPE	WAG
MODULE NAME	DEFAULT
WAG ECHELON MODE	7

NOTE:
REFER TO WAG INSTALLATION AND SETUP IN APPENDIX "A" GCP4000 SYTEM CUT OVER, TEST PROCEDURE AND CHECK OFF SHEET.

MEASURE BATTERY VOLTAGE A7 INPUT		
BATTERY VOLTAGE	OB	_____ VOLTS
BATTERY VOLTAGE	X-B	_____ VOLTS
BATTERY VOLTAGE	B-G	_____ VOLTS

	CONTROL SYSTEM CONFIGURATION MENU QUESTIONS	
	OPTION	SELECTION
NOTE 1 -	RESET NAMES AND MODULES*	YES ☐ NO ☐
	RAILROAD NUMBER	125
	ENTRANCE GATES*	0 ☐ 1 ☐ 2 ■ 3 ☐ 4 ☐ 5 ☐ 6 ☐ 7 ☐ 8 ☐
NOTE 2 -	EXIT GATES*	0 ■ 1 ☐ 2 ☐ 3 ☐ 4 ☐
	GATE POSITION FAIL*	20 SECS.
	BATTERY BANKS*	1 ☐ 2 ■ 3 ☐
	BATT NON USED*	NO ☐ YES ■
	INTERNAL CROSSING CONTROLLERS*	0 ☐ 1 ☐ 2 ■
	EXTERNAL CROSSING CONTROLLERS*	0 ■ 1 ☐ 2 ☐
NOTE 3	VHF COMMUNICATOR*	YES ■ NO ☐
	ACTIVATION CODE	232
	ACTIVATION TIMEOUT	(60 SEC)
	iLOD MODULES*	0 ☐ 1 ☐ 2 ■ 3 ☐ 4 ☐
NOTE 4 -	ANY LED BULBS USED*	NO ☐ YES ■
	AUTO INSPECTIONS*	YES ■ NO ☐
NOTE 5	BELL SENSOR*	0 ☐ 1 ■ 2 ☐ 3 ☐ 4 ☐
	BELL SENSOR TSS 1*	NO ☐ YES ■
	BELL SENSOR TSS 2*	NO ■ YES ☐
	BELL SENSOR TSS 3*	NO ■ YES ☐
	BELL SENSOR TSS 4*	NO ■ YES ☐
	BELL SENSOR TSS 5*	NO ■ YES ☐
	BELL SENSOR TSS 6*	NO ■ YES ☐
	BELL SENSOR TSS 7*	NO ■ YES ☐
	BELL SENSOR TSS 8*	NO ■ YES ☐
	BELL ON*	GATES LOWERING ■ GATES MOVING ☐ ALWAYS ☐
	GFT'S	YES ■ NO ☐
NOTE 6 -	BATTERIES ON GFT1	1 ☐ 2 ■
	GATE TIP SENSORS*	YES ■ NO ☐
	RTU	NO ■ YES ☐
NOTE 7	VHF VOICE CHANNEL	1 ☐ 2 ☐ 3 ☐ 4 ☐ 5 ☐ 6 ☐ 7 ☐ 8 ☐
	DATA CHANNEL	1 ☐ 2 ☐ 3 ☐ 4 ☐ 5 ☐ 6 ☐ 7 ☐ 8 ☐
	FULL APPROACH MOVE ALARMS*	ACTIVATED ■ DO NOT ACTIVATE ☐

NOTE 8		
EDIT DIGITAL INPUTS	■ NO	☐ YES
EDIT BATTERIES	■ NO	☐ YES
EDIT RELAYS	■ NO	☐ YES
EDIT INDICATOR LEDS	■ NO	☐ YES
EDIT TEST LED'S	■ NO	☐ YES
EDIT iLOD SENSOR	■ NO	☐ YES
EDIT VHF SETTINGS	■ NO	☐ YES

NOTES:
1. SELECT YES ON INITIAL SET-UP.
2. OPTION AVAILABLE IF GATES = YES
3. OPTION AVAILABLE IF VHF COMMUNICATOR = YES LAST 3 DIGITS OF DOT NUMBER.
4. OPTION AVAILABLE IF iLODS.
5. OPTION AVAILABLE IF BELL SENSORS.
6. OPTION AVAILABLE IF GATES.
7. OPTION AVAILABLE IF VHF RADIO.
8. ONLY YES IN SPECIAL CIRCUMSTANCES.
9. SELECT "MENU" THEN "CONFIGURATION" FROM SEAR II INTERFACE KEYPAD TO ACCESS MODULE CONFIGURATION MENU.

NEW WORK

SAFETRAN systems

PROJECT #: IL2000014
DES/CHKD BY: MLS/SWS
DATE: 06-16-00

= NOTE

4000GCP.C07
REV. 10-26-06

CSX TRANSPORTATION
RAIL TRANSPORT GROUP ENGINEERING
COMMUNICATIONS AND SIGNALS

AMOCO INDUSTRIAL LEAD
US-6 608232Y
SEAR II: CONFIGURATION & FUNCTIONS
ROCKDALE, IL M.P. BIF-46.30

DESIGN DATE	REV. NO.	DESIGNED	DIGITIZED	CHECKED	DATE
06-16-00	1	SAF/MLS	SAF/MLS	SAF/SWS	06-16-00

DRAWING	SHEET NO	FILE	SHEET
-----	-----	BIF04630	C07

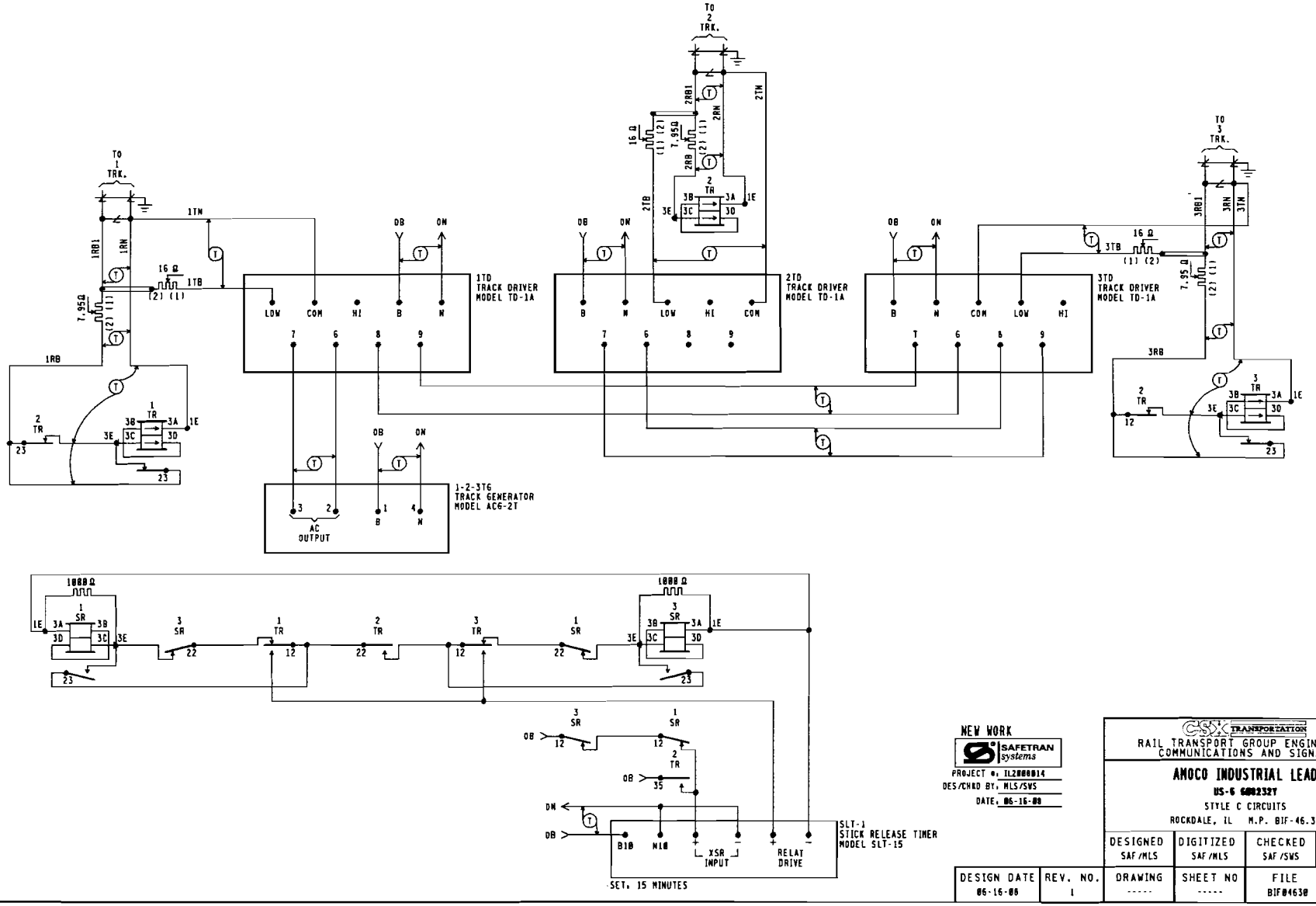

NEW WORK

SAFETRAN systems

PROJECT #: IL2000014
DES/CHKD BY: MLS/SWS
DATE: 06-16-08

CSX TRANSPORTATION

RAIL TRANSPORT GROUP ENGINEERING
COMMUNICATIONS AND SIGNALS

AMOCO INDUSTRIAL LEAD

US-G 6002327

STYLE C CIRCUITS

ROCKDALE, IL M.P. BIF-46.30

DESIGNED	DIGITIZED	CHECKED	DATE
SAF/MLS	SAF/MLS	SAF/SWS	06-16-08

DESIGN DATE	REV. NO.	DRAWING	SHEET NO	FILE	SHEET
06-16-08	1	-----	-----	BIF04630	C08

Minimum Program Steps Report

Location and SIN

DOT Number: 608232Y
Milepost Number: BIF-46.30
Site Name: US-6

SIN: 712547700516 *

* Parameter is part of office check number calculation.

MCF and Template Selection

MCF Name: GCP-T6X-01-2.mcf
MCF Revision: 012
MCFCRC: 0DFE7A0C

Template = 1A.6 Trk B1 *

* Parameter is part of office check number calculation.

Minimum Program Steps

TEMPLATE: module configuration
Track 1 Slot = Not Used *

TEMPLATE: AND 1 XR
AND 1 Enable Used = Yes *

TEMPLATE: SSCC
SSCC-1 Number of GDs = 1 *
SSCC-2 Number of GPs = 1 *
SSCC-2 Number of GDs = 1 *

TEMPLATE: IP assignment SSCC
IN 7.2 = Not Used *
IN 8.2 = AND 1 XR Enable *
IN 8.4 = GD 2.1 *
IN 8.5 = GP 2.1 *

TEMPLATE: SEAR
SP 3.1 = Not Used *

ADVANCED: site options
Daylight Savings = On *

SSCC: 1
SSCC-1 Gate Delay = 5 sec *
SSCC 1 : Flash Rate = 55 *
SSCC 1 : Lamp Neutral Test = Off *

SSCC: 2
SSCC-2 Gate Delay = 5 sec *
SSCC 2 : Flash Rate = 55 *
SSCC 2 : Lamp Neutral Test = Off *

SEAR
DI 1 = Gnd Flt Tester 1 *
DI 2 = Gnd Flt Tester 2 *
Rly 1 = Ground Fault Test *
Rly 2 = AC Control *

SEAR: slot 7-8 inputs
IN 7.1 = TSS 1 *
IN 8.1 = TSS 2 *
IN 8.3 = POK 2 *

* Parameter is part of office check number calculation.

Check Numbers

Office Check No. (DT 4.6.0): 0668A1A6
Office Check Number: 0668A1A6
Config. Check Number: 34532663
(Based on MCF Revision 012)

NEW WORK

SAFETRAN systems

PROJECT #: IL2008014
DES/CHKD BY: MLS/SWS
DATE: 06-16-08

CSX TRANSPORTATION
RAIL TRANSPORT GROUP ENGINEERING
COMMUNICATIONS AND SIGNALS

AMOCO INDUSTRIAL LEAD
US-6 608232Y
MINIMUM PROGRAM STEPS REPORT CWE-30
ROCKDALE, IL M.P. BIF-46.30

40006CP.P01
REV. 01-28-08

DESIGN DATE	REV. NO.	DRAWING	SHEET NO	FILE	SHEET
06-16-08	1	-----	-----	BIF04630	P01

DESIGNED	DIGITIZED	CHECKED	DATE
SAF/MLS	SAF/MLS	SAF/SWS	06-16-08