SD 1008 - MP 117 TO 118

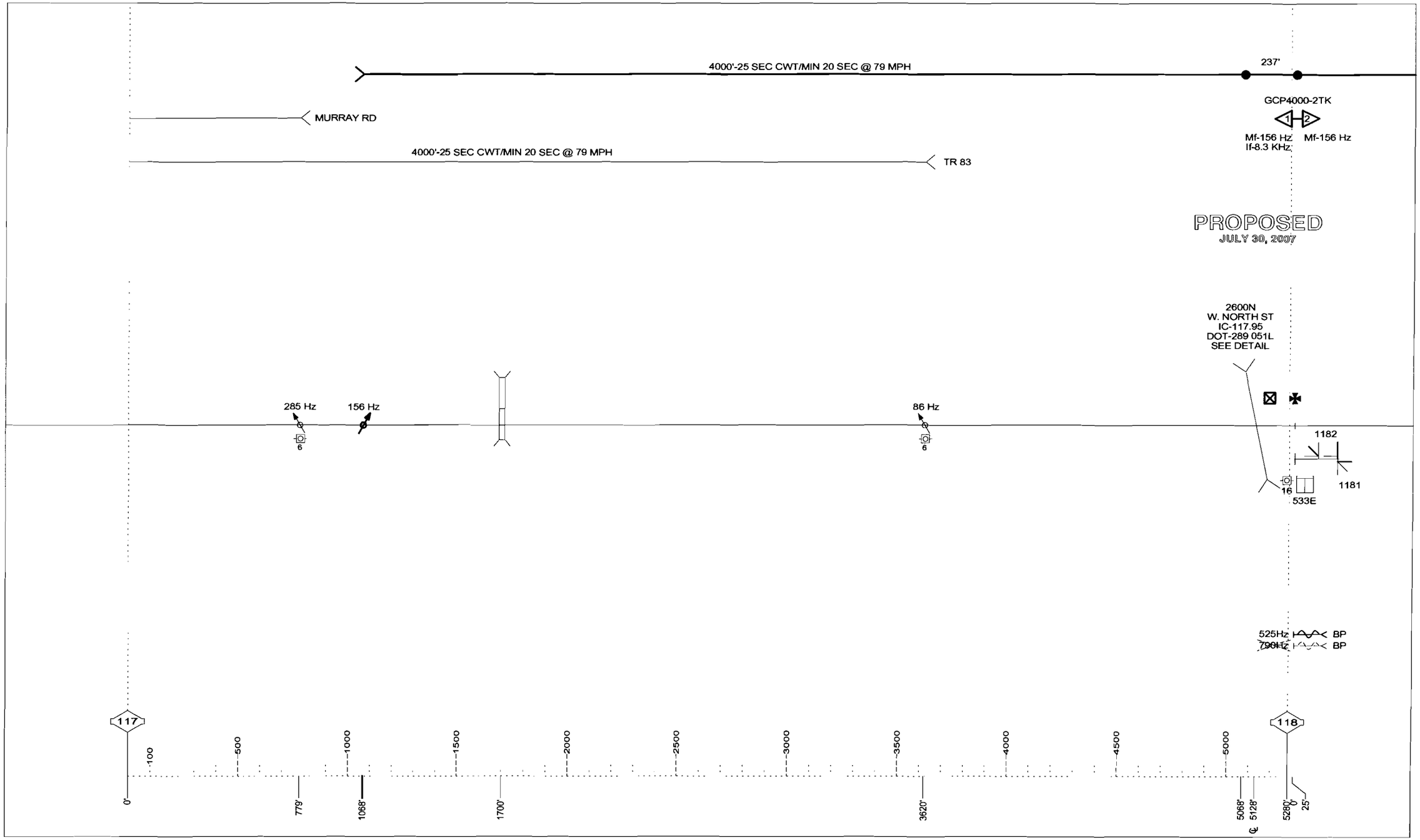

DRAWING SCALE 1" = 500'

10-24-06

SD 1008 - MP 118 TO 119

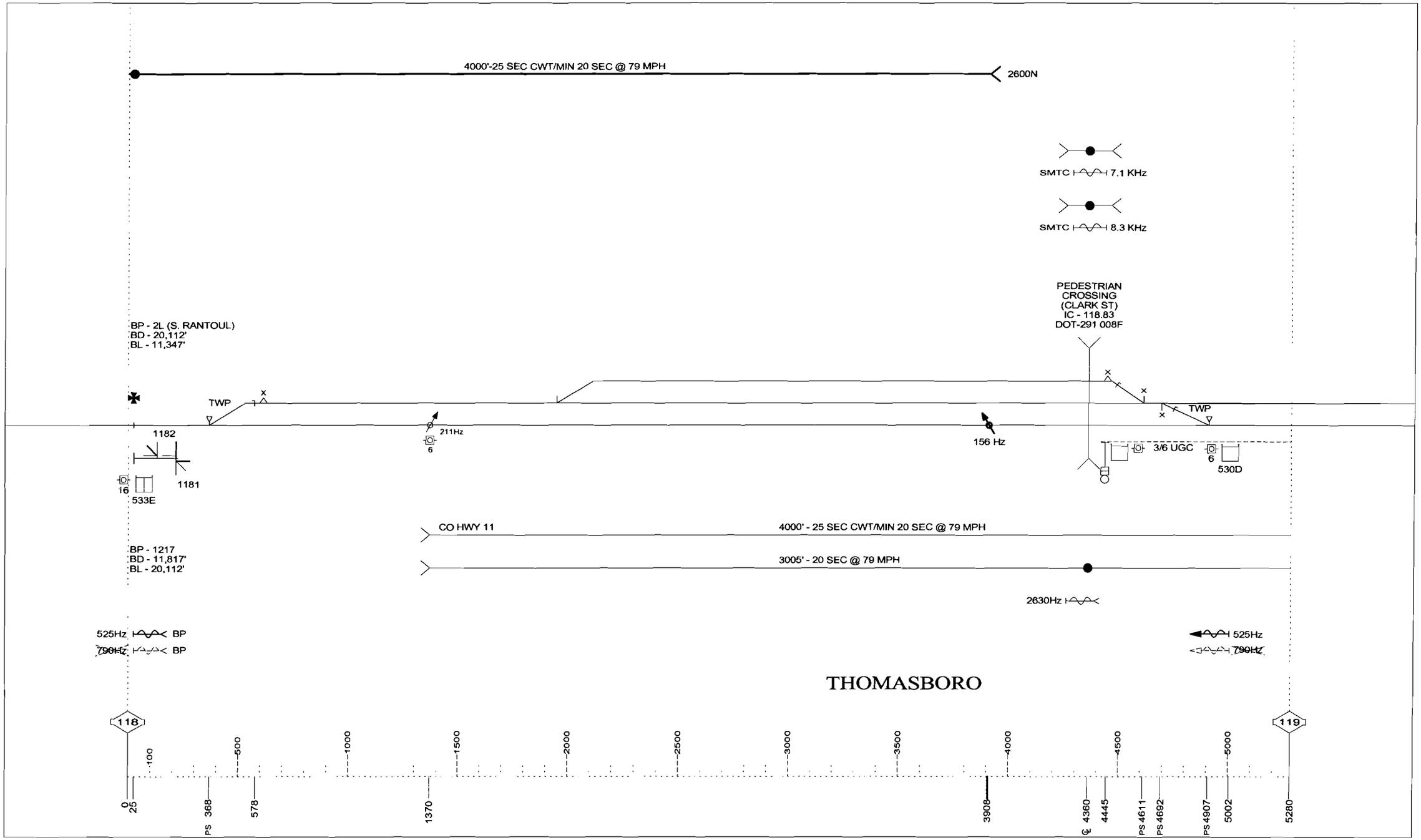

DRAWING SCALE 1" = 500'

9-27-05 7-3-98

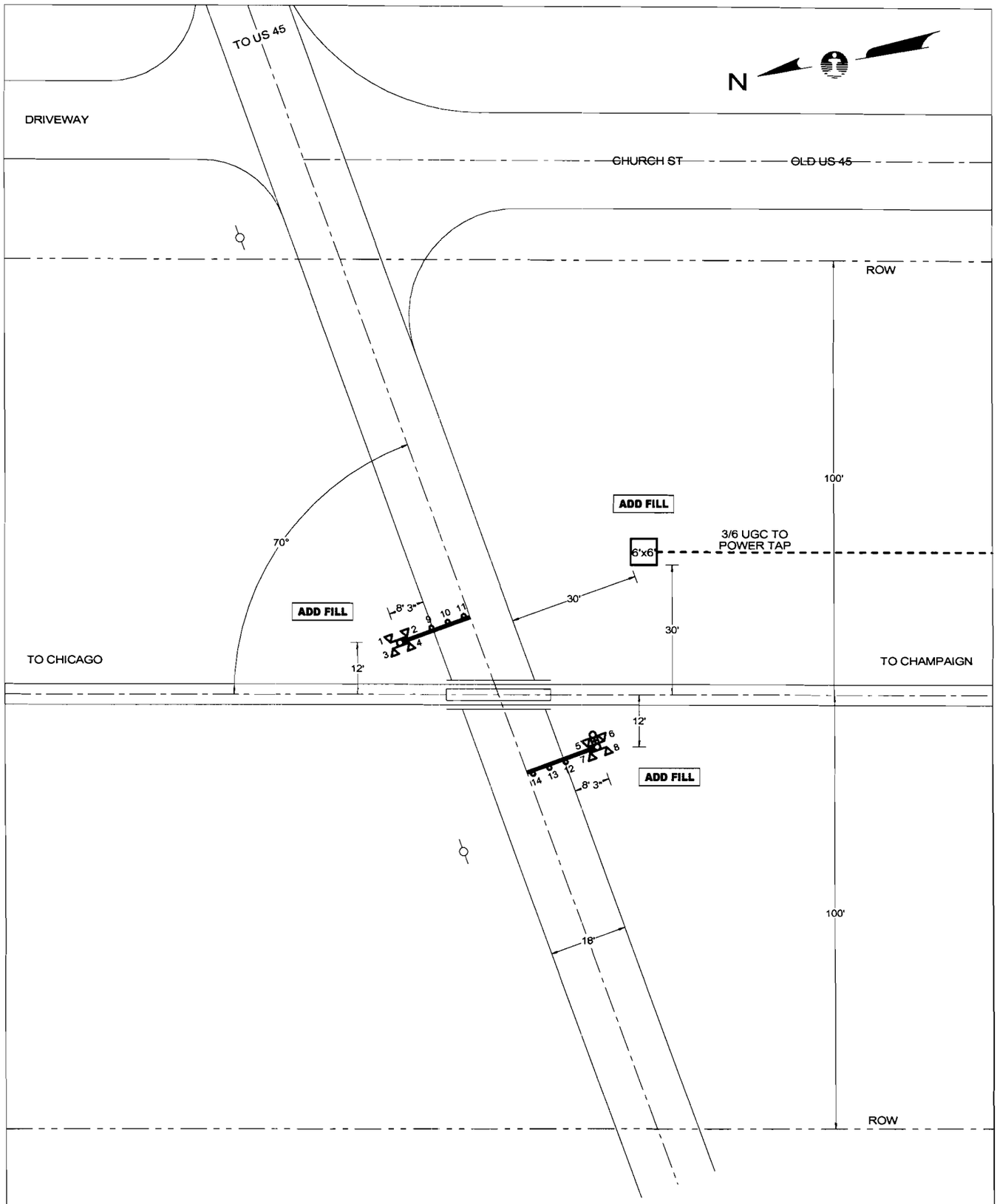

PROPOSED
JULY 30, 2007

QUADRANT	NE	SW
STANDARD AFLS	LED	LED
CANTILEVER, FT.	-	-
GATE, FT.	17	17
ADDED LIGHTS	-	-
BARRICADE	-	-
MULTI-TK SIGN	-	-
BELL	-	X
REVISIONS		

E:\DWG\CHI\11795X.CAD

CN

SIGNALS & COMMUNICATIONS, ENGINEERING DEPARTMENT

CITY & STATE: THOMASBORO, IL	SD 1008 X
CROSSING: 2600N / W. NORTH ST	DATE: JULY 30, 2007
IC - 117.95	DOT - 289 051L
MIDWEST DIVISION	CHICAGO SUBDIVISION

IN SERVICE	SCALE	DRAWN BY
	1"=30'	AVS

WATERMARK

NO.	DATE	BY	DESCRIPTION	APP. BY
1				
2				
3				
4				
5				

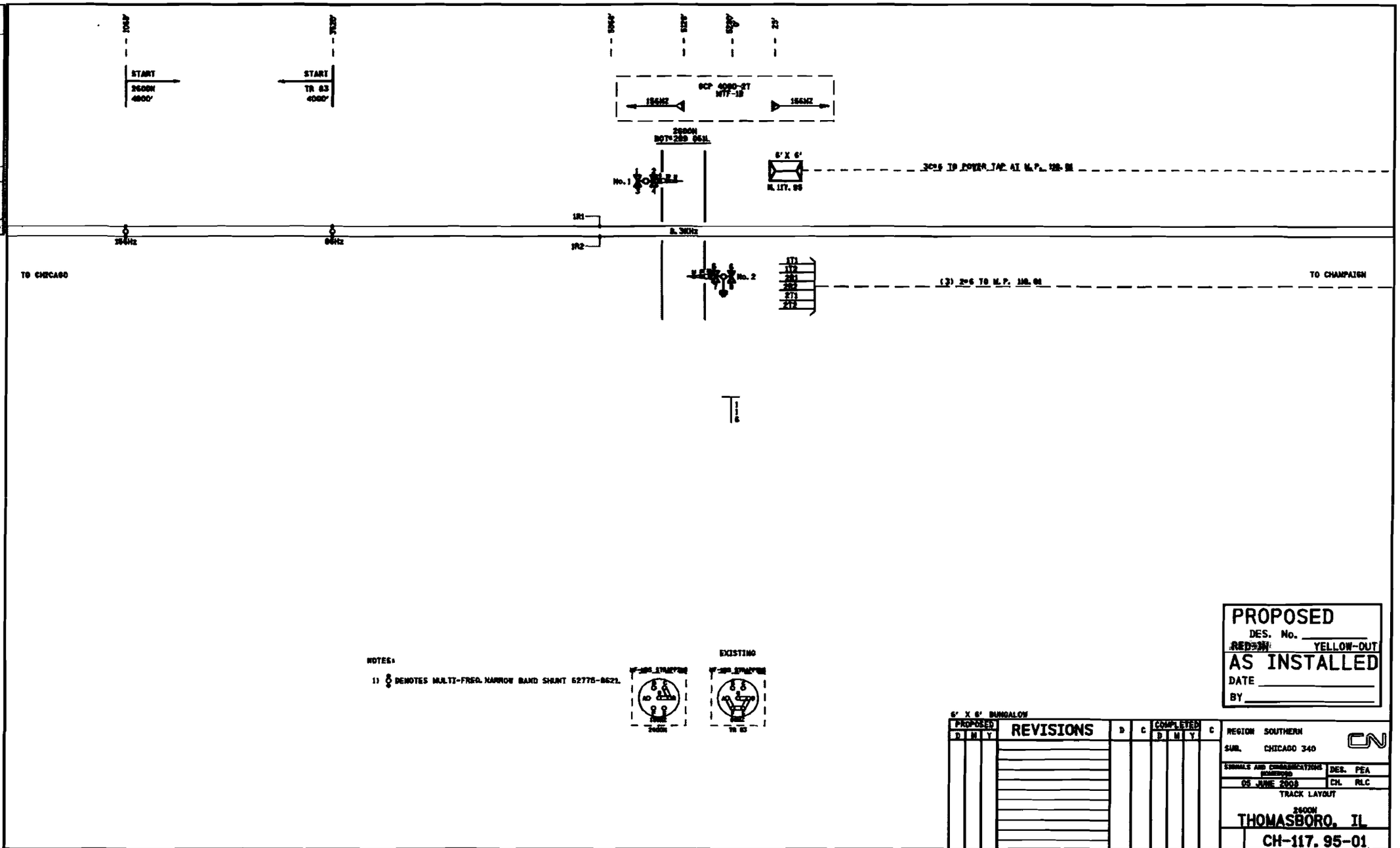

PROPOSED
DES. No. _____
RED-IN YELLOW-OUT
AS INSTALLED
DATE _____
BY _____

PROPOSED D	M	Y	REVISIONS	D	C	COMPLETED D	M	Y	C

REGION SOUTHERN
SUBL. CHICAGO 340
CN
SIGNALS AND COMMUNICATIONS DEPARTMENT
DES. PEA
05 JUNE 2008
CH. RLC
TRACK LAYOUT
2600N
THOMASBORO, IL
CH-117.95-01
SAFETRAN SYSTEM CORP.
LOUISVILLE NASHVILLE CHARLOTTE, KY

SAFETRAN SYSTEMS CORPORATION

DES. : PEA	DATE: 06/05/08	JOB NO. : PIC410152	
CKD. : RLC	ISSUE DATE: N/A	EST. NO. : N/A	
DRN. : PEA	PLAN NO. N/A	SHEET 1 OF 15	
P TIME: 08:09	P DATE: 18-AUG-2008	CAD ID. : CH-117.95-01	

CH-117.95-01.DWG
19-AUG-2008

WATERMARK

NO.	DATE	BY	REVISIONS DESCRIPTION	APP. BY
1				
2				
3				
4				
5				

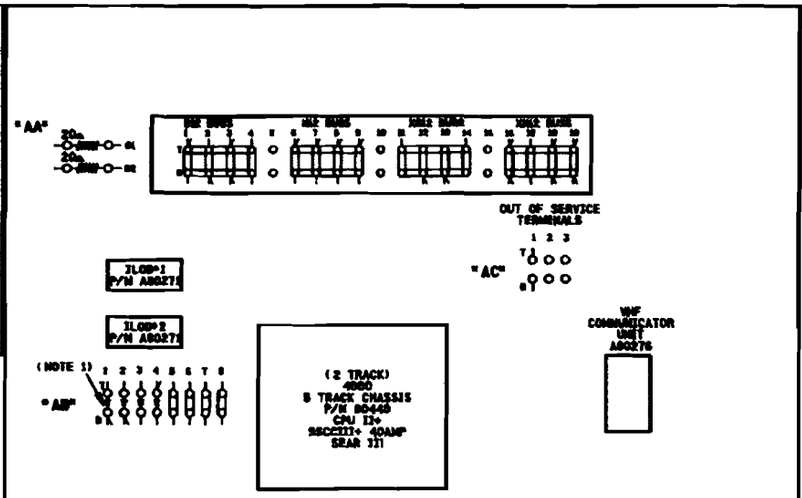

NOTE:

1) -◆- DENOTES RECTIFIER : (SAFETRAN# 800RA299006)

SIDE" A"

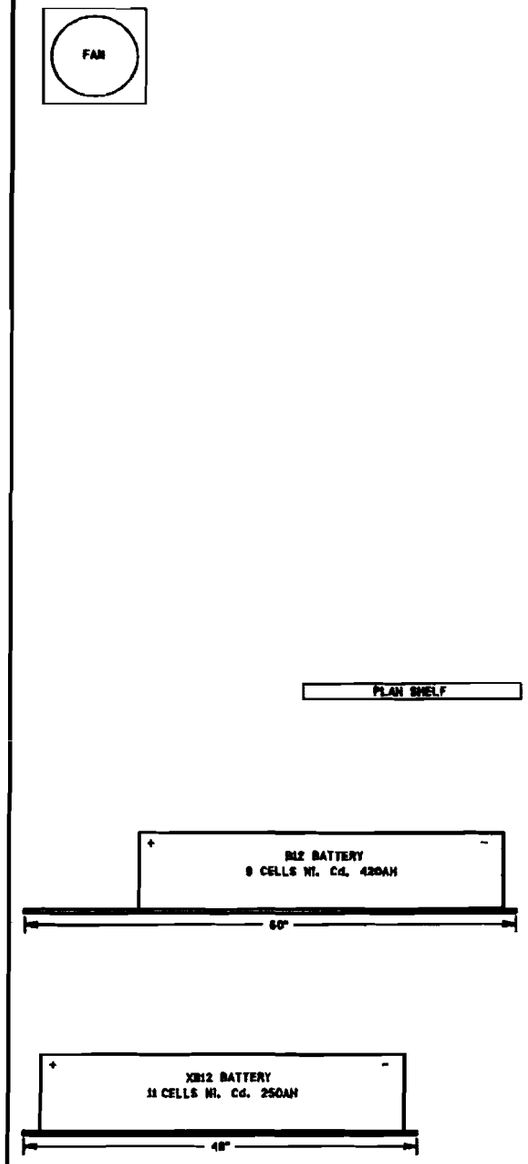

SIDE" B"

SAFETRAN SYSTEMS CORPORATION	
DRN. : PEA	DATE: 08/05/08
CKD. : RLC	ISSUE DATE: N/A
DWN. : PEA	PLAN NO. #N/A
P TIME:08:05	P DATE: 18-AUG-2008
JOB NO. : FTCLU0152	
EST. NO. :N/A	
SHEET 2 OF 16	
CAD ID. : CH-117.95-02	

PROPOSED
DES. No. _____
RED-IN YELLOW-OUT
AS INSTALLED
DATE _____
BY _____

8' X 8' BUNGALOW

PROPOSED D	M	Y	REVISIONS	D	C	COMPLETED D	M	Y	C

REGION SOUTHERN
SUB. CHICAGO 340
SIGNALS AND COMMUNICATIONS HOUSINGS
05 JUNE 2008
DES. PEA
CH. RLC
BUNGALOW LAYOUT
SIDE "A" & "B"
2500M
THOMASBORO, IL
CH-117.95-02

SAFETRAN SYSTEM CORP.
LOUISVILLE BUSINESS CENTER, KY

CH-117.95-02.DGN
18-AUG-2008

WATERMARK

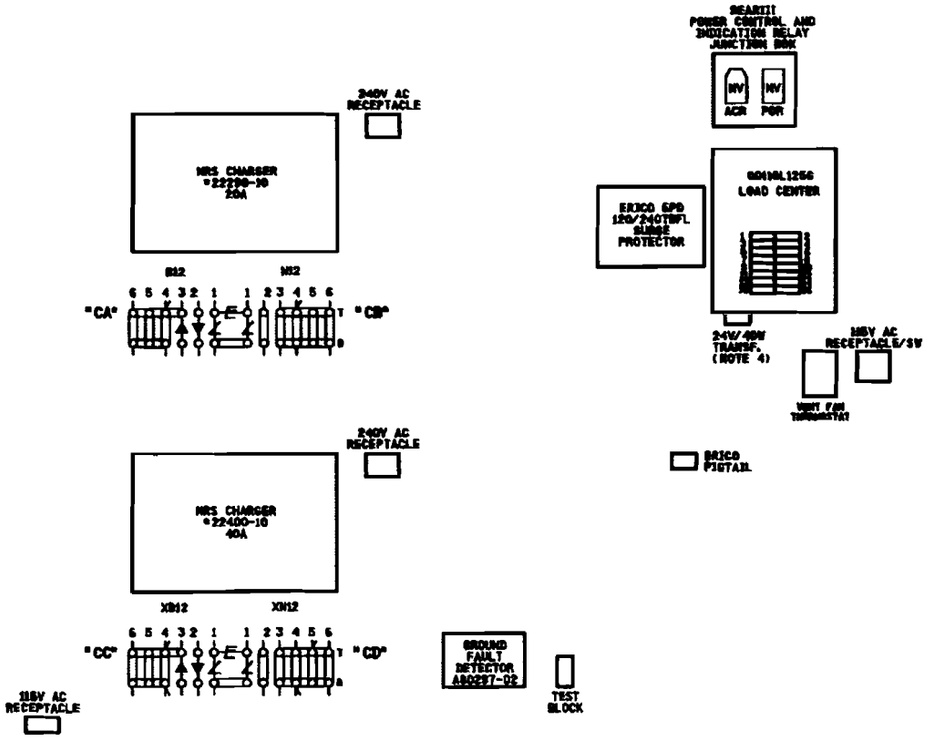

NOTES:

1) ⅋ DENOTES EQUALIZER TYPE: (SAFETRAN #022700-1X)
2) ⊸ DENOTES LIGHTNING ARRESTER TYPE: (SAFETRAN #022506-1X)
3) SURGE PROTECTION SHOULD BE BONDED TO BUNGALOW.
4) 24V-40W TRANSFORMER (CN STOCK #02-45-367)

SIDE" C"

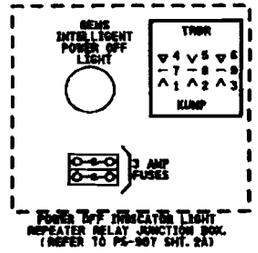

SIDE" D"
ABOVE ENTRY DOOR

SAFETRAN SYSTEMS CORPORATION	
DES. : PEA	DATE: 06/05/06
CKD. : RLC	ISSUE DATE: N/A
DRN. : PEA	PLAN NO. : N/A
P TIME: 00:00	P DATE: 16-AUG-2006
JOB NO. : PICA0652	
EST. NO. : N/A	
SHEET 3 OF 16	
CAD ID. : CH-117.95-03	

NO.	DATE	BY	DESCRIPTION	BY	APP.
1					
2					
3					
4					
5					

CH-117.95-03.DGN
15-AUG-2006

PROPOSED
DES. No. _____
RED-IN YELLOW-OUT
AS INSTALLED
DATE _____
BY _____

6' X 6' BUNGALOW

PROPOSED D	M	Y	REVISIONS	D	C	COMPLETED D	M	Y	C

REGION SOUTHERN
SUB. CHICAGO 340
CN
SIGNALS AND COMMUNICATIONS ENGINEERING
DES. PEA
05 JUNE 2006
CH. RLC
BUNGALOW LAYOUT
SIDE "C" & OVER DOOR SIDE "D"
2600N
THOMASBORO, IL
CH-117.95-03

SAFETRAN SYSTEM CORP.
LOUISVILLE DIVISION, LOUISVILLE, KY

WATERMARK

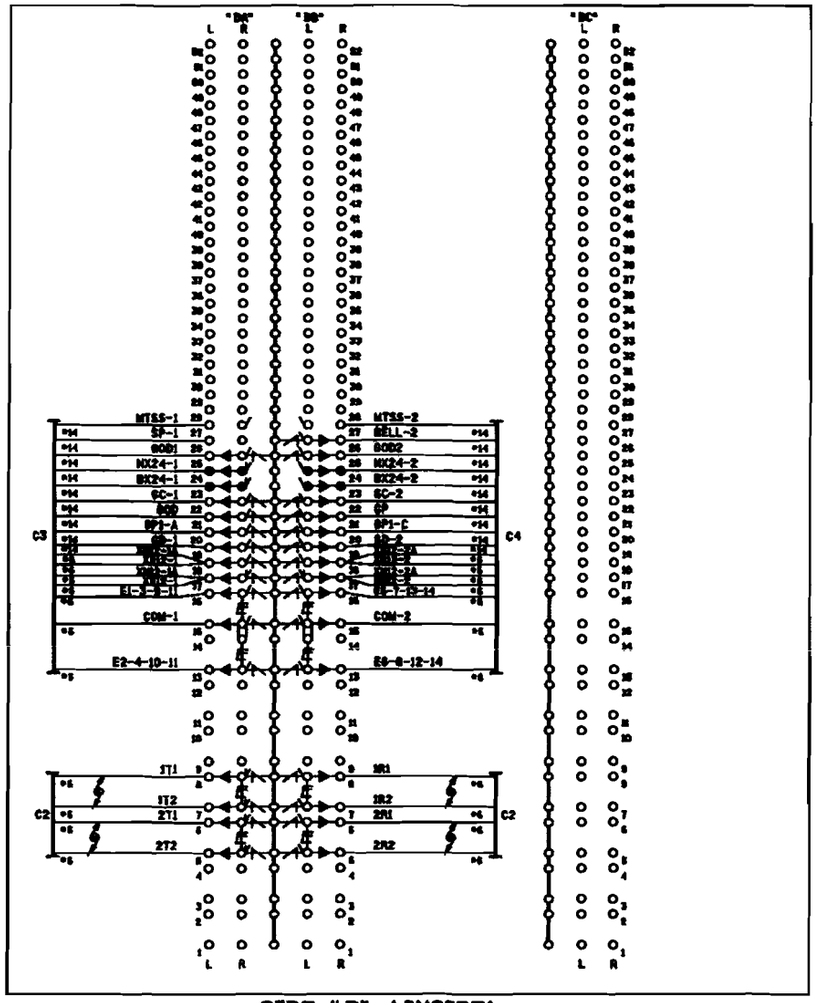

SIDE "D" (INSIDE)

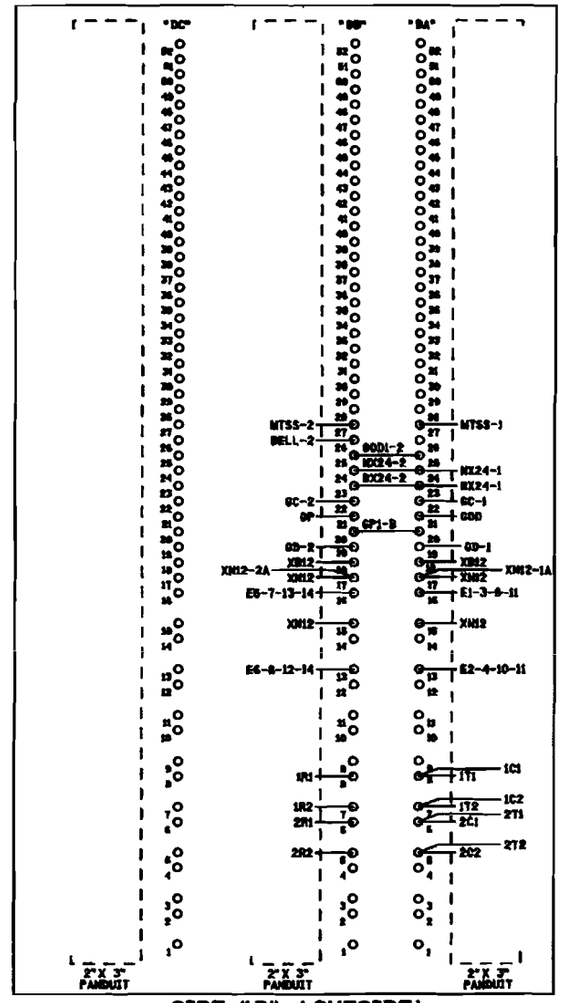

SIDE "D" (OUTSIDE)

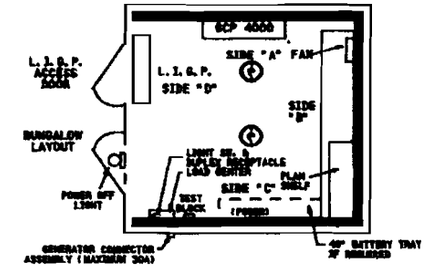

ROOF MOUNTED AC/HEATING UNIT

CABLE CONSIST:

C1-3C#6 TECK 90 W/G TO MAIN SERVICE
C2-(4)-2SC#6 TH. TO TRACK
C3-36C (7#6, 3#14) TO GATE (SIG.#1)
C4-36C (7#6, 3#14) TO GATE (SIG.#2)

NOTES:

1) DENOTES LIGHTNING ARRESTER TYPE: (SAFETRAN #022505-1X)
2) DENOTES EQUALIZER TYPE: (SAFETRAN #022700-1X)
3) DENOTES TWISTED PAIR.
4) ENSURE DOUBLE NUTTING OF ALL TERMINALS.
5) ● DENOTES INSULATED TERMINAL

PROPOSED
DES. No. _____
RED-IN YELLOW-OUT
AS INSTALLED
DATE _____
BY _____

6' X 6' BUNGALOW

PROPOSED D	M	Y	REVISIONS	D	C	COMPLETED D	M	Y	C

REGION SOUTHERN
SUB. CHICAGO 340

DES. PEA	
CH. RLC	

05 JUNE 2000

BUNGALOW LAYOUT SIDE "B"
LOW IMPEDANCE GROUND PLANE
2000M

THOMASBORO, IL

CH-117.95-04

SAFETRAN SYSTEM CORP.
LOUISVILLE DIVISION, LOUISVILLE, KY

SAFETRAN SYSTEMS CORPORATION
DES. : PEA DATE: 06/05/00 JOB NO. : PIEA10152
CKD. : RLC ISSUE DATE: N/A EST. NO. : N/A
DRN. : PEA PLAN NO. : N/A SHEET 4 OF 18
P. TIME: 08:00 P. DATE: 18-AUG-2000 CAD FIL : CH-117.95-04

CH-117.95-04.DWG
18-AUG-2000

WATERMARK

NO.	DATE	BY	DESCRIPTION	APP. BY
1				
2				
3				
4				
5				

NOTE:

1) DISABLE THE DISPLAY HEATER BY REMOVING JUMPER J-22 (LOCATED AT THE EDGE OF THE DISPLAY MODULE CARD THAT PLUGS INTO THE CHASSIS).

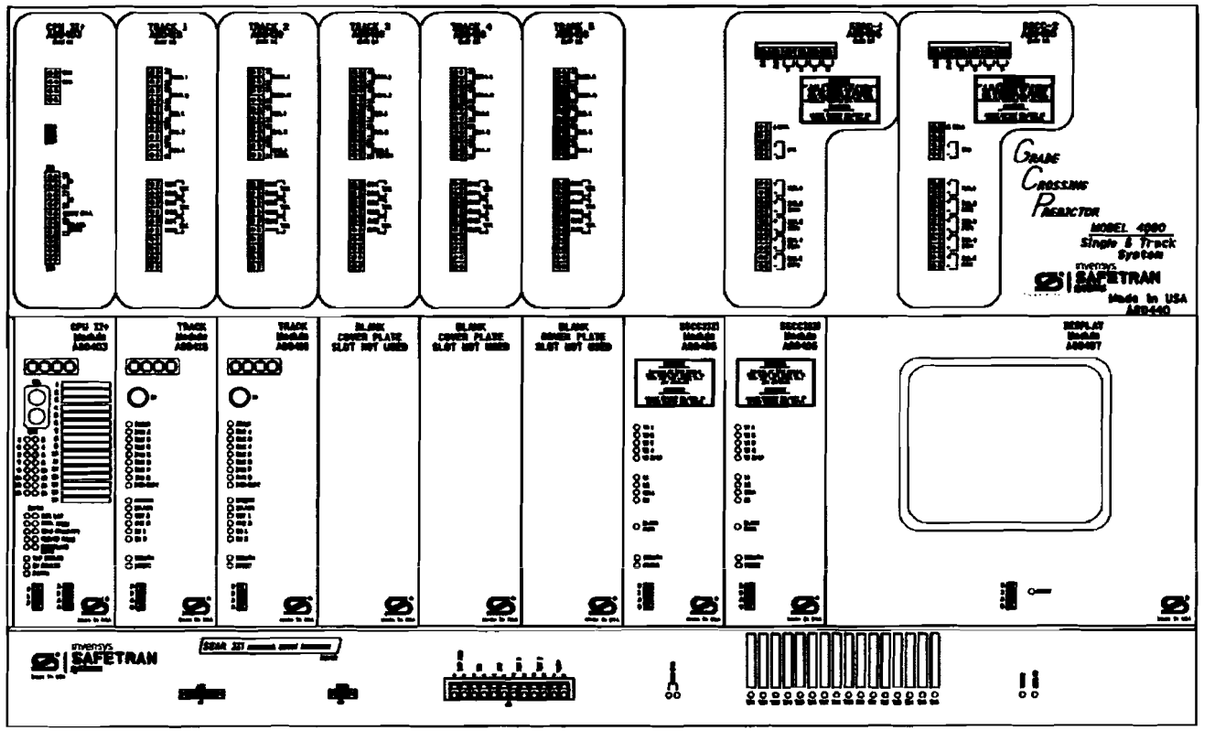

ATTENTION!

ENSURE THE DISPLAY MODULE HEATER IS DISABLED. LEAVING THE DISPLAY HEATER ENABLE WILL REDUCE THE AMOUNT OF BATTERY STANDBY TIME IN THE EVENT OF AN AC POWER FAILURE.

HEATER FUNCTION IS JUMPER SELECTABLE ON THE DISPLAY MODULE BOARD. THREE OPTIONS ARE AVAILABLE.
NORMAL LCD HTR (DEFAULT)
HI CURRENT
NO JUMPER (HEATER DISABLED)

PROPOSED
DES. No. _____
RED-IN YELLOW-OUT
AS INSTALLED
DATE _____
BY _____

6' X 6' BUNGALOW

PROPOSED D	M	Y	REVISIONS	D	C	COMPLETED D	M	Y	C

REGION SOUTHERN
SUB. CHICAGO 340
SIGNALS AND COMMUNICATIONS MANAGER — DES. PEA
05 JUNE 2008 — CH. RLC
GCP 4000
5 TRK CHASSIS & MODULE LAYOUT
2600N
THOMASBORO, IL
CH-117.95-05

SAFETRAN SYSTEM CORP.
LOUISVILLE WORKING CHARTS, KY

SAFETRAN SYSTEMS CORPORATION

DES. : PEA	DATE: 06/05/08	JOB NO. : PTCA10152	
CCD. : RLC	ISSUE DATE: N/A	EST. NO. :	
DWG. : PEA	PLAN NO. :N/A	SHEET 5 OF 16	
P TIME:00:00	P DATE:19-AUG-2008	CAD ID. : CH-117.95-05	

CH-117.95-05.DWG
19-AUG-2008

WATERMARK

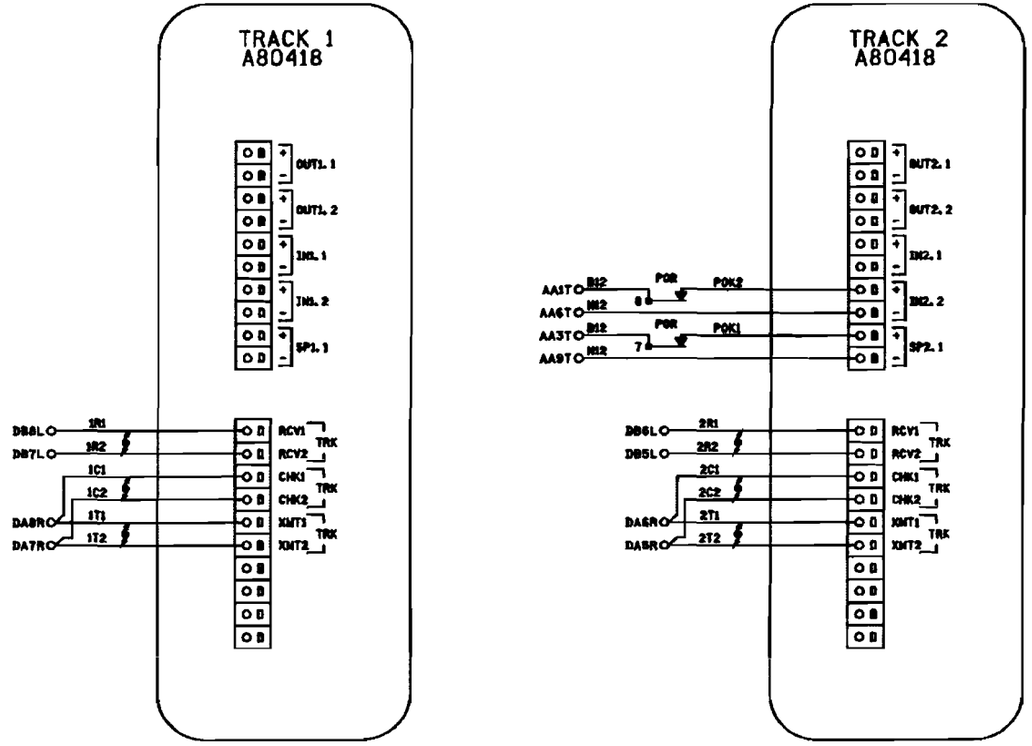

NOTES:

1) ALL WIRING #16 AWG UNLESS OTHERWISE NOTED.

2) ⚡ DENOTES TWISTED PAIR.

PROPOSED
DES. No. _____
RED-IN YELLOW-OUT
AS INSTALLED
DATE _____
BY _____

6' X 6' BUNGALOW

PROPOSED D	M	Y	REVISIONS	D	C	COMPLETED D	M	Y	C

REGION SOUTHERN
SUB. CHICAGO 340
CN

SIGNALS AND COMMUNICATIONS DEPARTMENT — DES. PEA
05 JUNE 2008 — CH. RLC

GCP 4000
TRACKS 1 & 2 CONNECTIONS
2600N
THOMASBORO, IL

CH-117.95-06

SAFETRAN SYSTEM CORP.
LOUISVILLE DIVISION, LOUISVILLE, KY

SAFETRAN SYSTEMS CORPORATION	
DES.: PEA	DATE: 06/05/08
CKD.: RLC	ISSUE DATE: N/A
DRN.: PEA	PLAN NO.: N/A
P TIME: 09:09	P DATE: 18-AUG-2008
JOB NO.: PTCA10152	
EST. NO.: N/A	
SHEET 6 OF 15	
CAD ID.: CH-117.95-06	

NO.	DATE	BY	PROPOSED DESCRIPTION	APV. BY
1				
2				
3				
4				
5				

CH-117.95-06.DGN
18-AUG-2008

WATERMARK

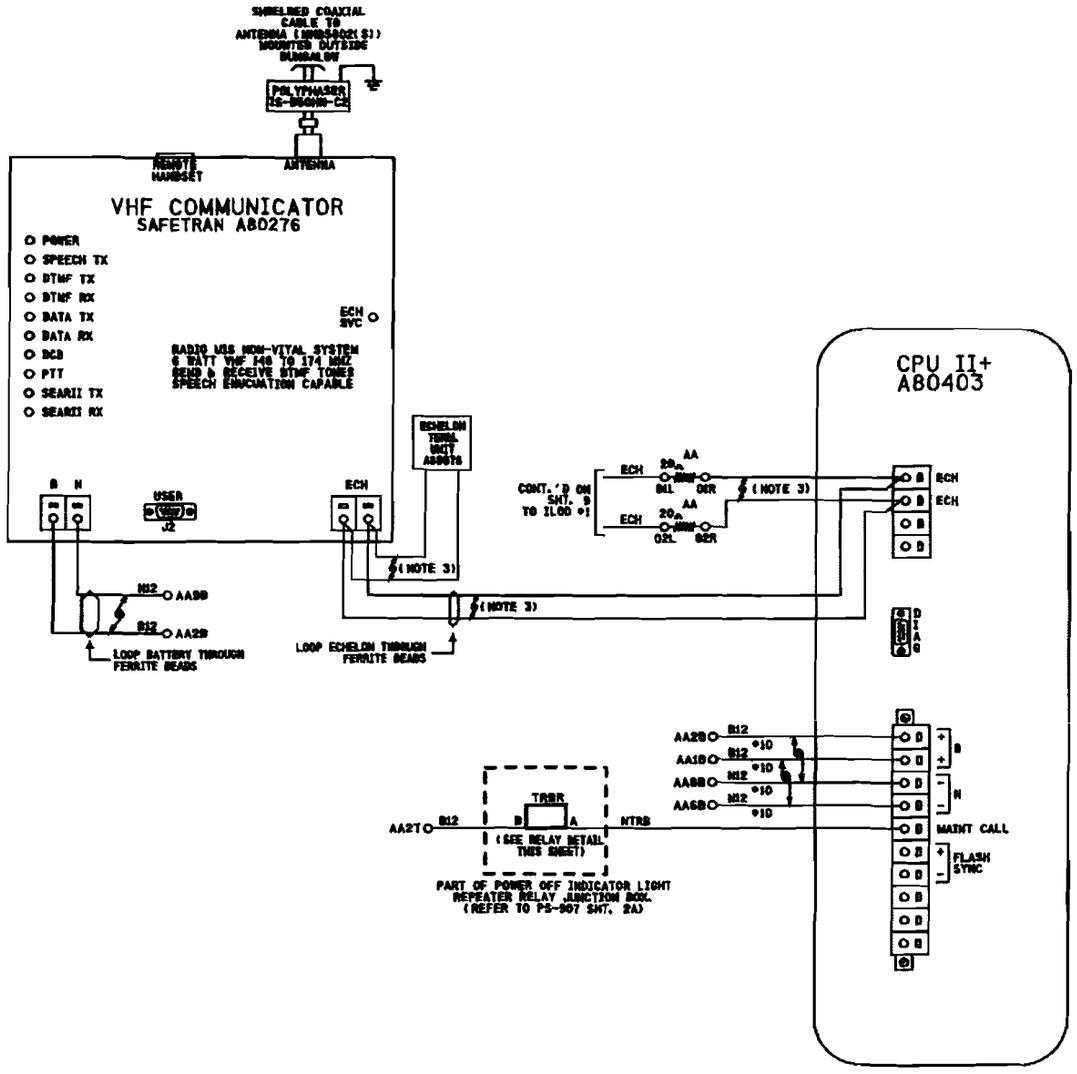

RELAY DETAIL

RELAY - POTTER & BRUMFIELD
MODEL KUMP-14D10-12 SOCKET MOUNTABLE
12 VDC W/ 3 FORM C CONTACTS.

SOCKET - SCREW TERMINAL
MODEL 276121.

RELAY WIRING DIAGRAM (REAR VIEW)

NOTE:
SOCKET NUMBERING CORRESPONDS DIRECTLY WITH RELAY NUMBERING.
(COIL SHOWN ENERGIZED)

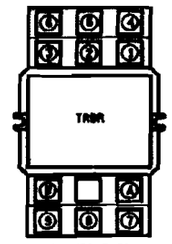

LOCATED OVER ENTRY DOOR

NOTES:
1) ALL WIRING #16 AWG UNLESS OTHERWISE NOTED.
2) ⚡ DENOTES TWISTED PAIR.
3) USE BELDEN CABLE, PART #8461-u500-50 FOR ALL ECHELON AND LAN WIRING.

PROPOSED
DES. No. _____
RED-IN YELLOW-OUT
AS INSTALLED
DATE _____
BY _____

6' X 6' BUNGALOW

PROPOSED D	M	Y	REVISIONS	D	C	COMPLETED D	M	Y	C

REGION SOUTHERN
SUB. CHICAGO 340
CN
SIGNALS AND COMMUNICATIONS HOMEWORK — DES. PEA
05 JUNE 2000 — CH. RLC
GCP 4000
CPUII+ & VHF COMMUNICATOR
2500N
THOMASBORO, IL
CH-117.95-07

SAFETRAN SYSTEM CORP.
LOUISVILLE DIVISION, LOUISVILLE, KY

SAFETRAN SYSTEMS CORPORATION
DES. : PEA — DATE: 06/05/00 — JOB NO.: PTEA5052
CKD. : RLC — ISSUE DATE: N/A — EST. NO.: N/A
DWN. : PEA — PLAN NO.: N/A — SHEET 7 OF 15
P TIME: 08:09 — P DATE: 18-AUG-2000 — CAD ID.: CH-117.95-07

CH-117.95-07.DWG
18-AUG-2000

WATERMARK

CH-117.95-08.DGN
19-AUG-2009

NO.	DATE	BY	DESCRIPTION	APP. BY
1				
2				
3				
4				
5				

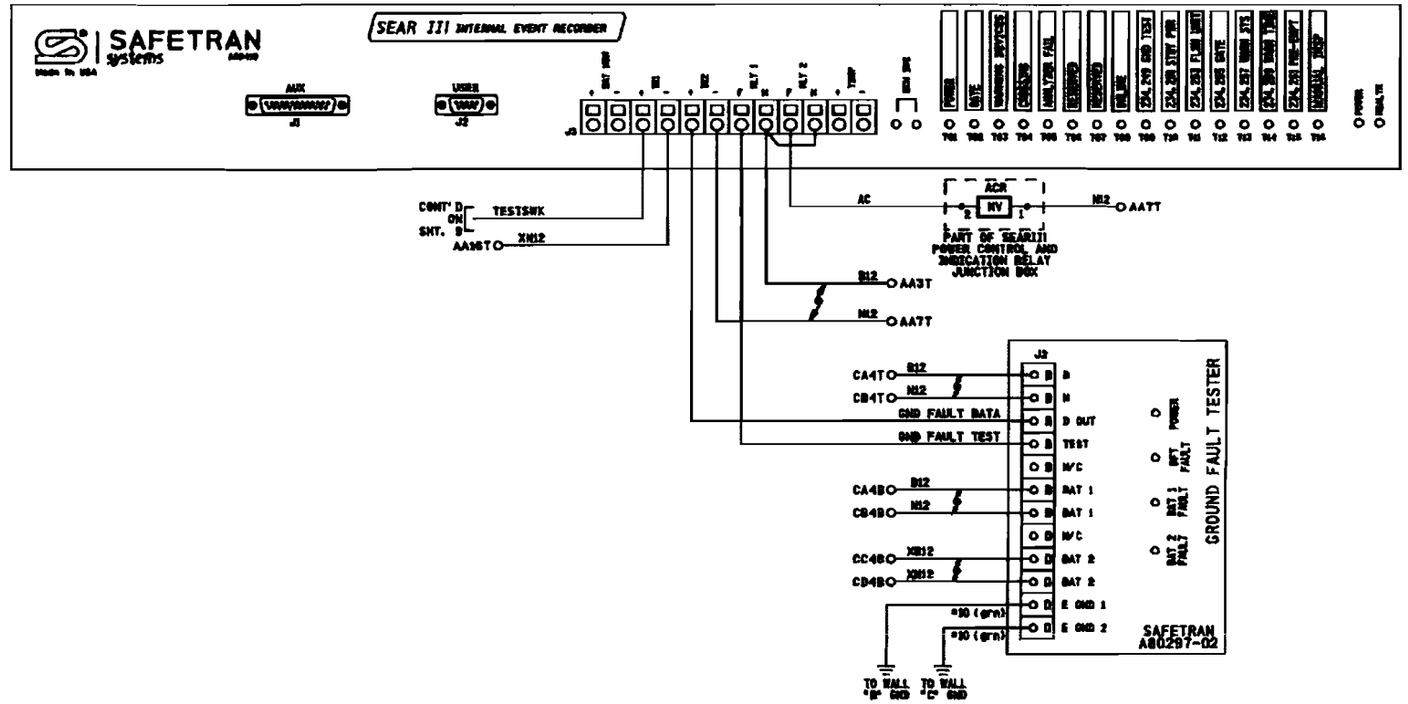

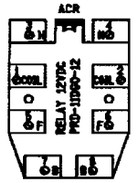

ACR - P&B RELAY, 2FB
(WITH TWO 30A CONTACTS @ 240VAC)
RELAY PART #PRD-1D60-12

NOTES:
1) ALL WIRING #16 AWG UNLESS OTHERWISE NOTED.
2) ⚡ DENOTES TWISTED PAIR.

6' X 6' BUNGALOW

PROPOSED			REVISIONS	D	C	COMPLETED			C
D	M	Y				D	M	Y	

PROPOSED
DES. No. _____
RED-IN YELLOW-OUT
AS INSTALLED
DATE _____
BY _____

REGION SOUTHERN
SUB. CHICAGO 340
CN

SIGNALS AND COMMUNICATIONS ENGINEERING
05 JUNE 2008
DES. PEA
CH. RLC

GCP 4000/SEAR III
INTERNAL EVENT ANALYZER WITH GFT
2500M
THOMASBORO, IL
CH-117.95-08

SAFETRAN SYSTEM CORP.
LOUISVILLE NATIONAL CITY, KY

SAFETRAN SYSTEMS CORPORATION		
DES.: PEA	DATE: 06/05/08	JOB NO.: PICA10152
CKD.: RLC	ISSUE DATE: N/A	EST. NO.: N/A
DRN.: PEA	PLAN NO.: N/A	SHEET 8 OF 15
P TIME: 10:11D	P DATE: 18-AUG-2009	CAD ID.: CH-117.95-08

WATERMARK

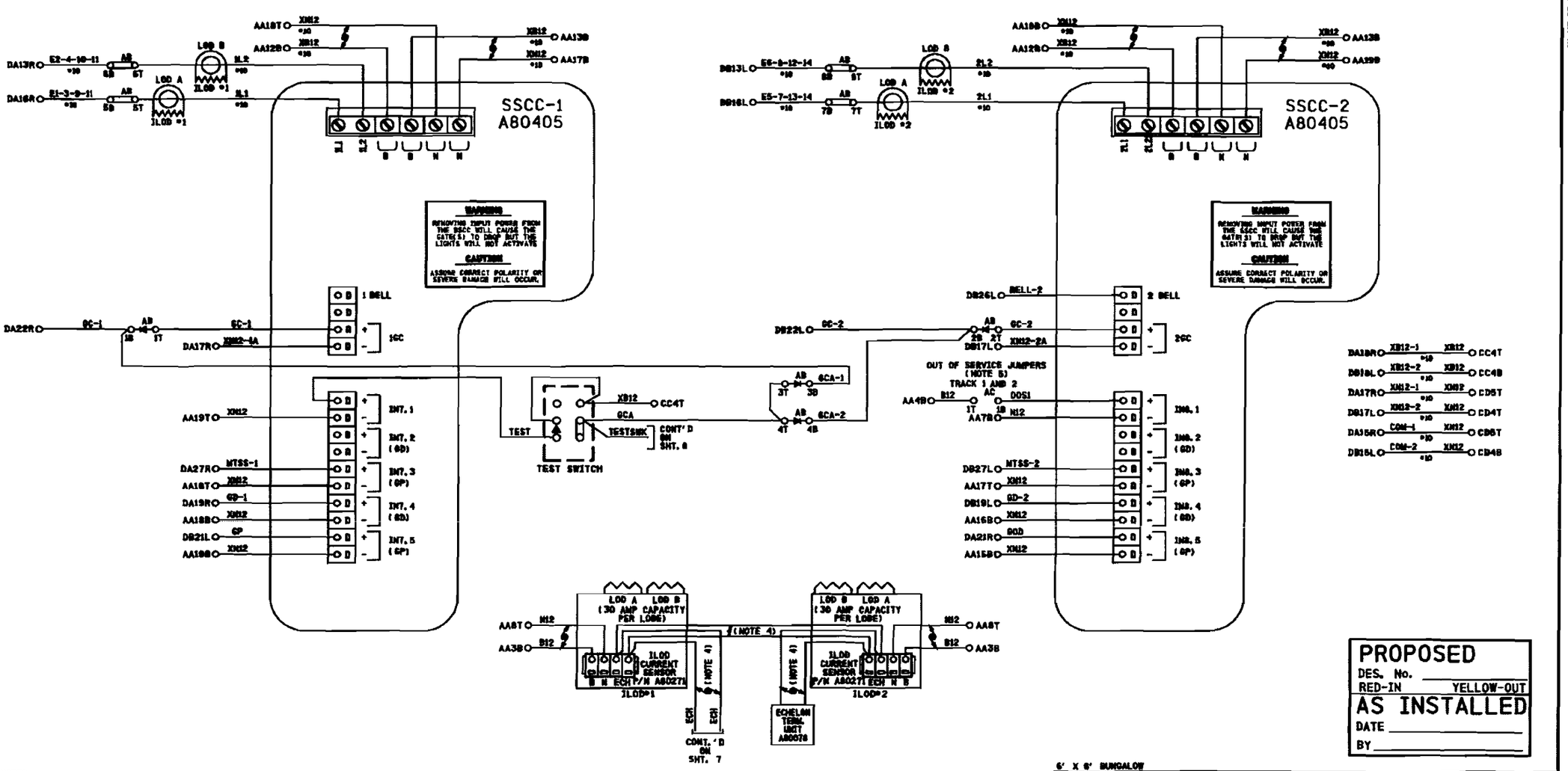

NOTES:

1) -⊣⊢- DENOTES RECTIFIER : (SAFETRAN #8008A299006)

2) ⚡ DENOTES TWISTED PAIR.

3) ALL WIRING TO BE #16 AWG MINIMUM UNLESS OTHERWISE NOTED.

4) USE BELDEN CABLE, PART #8461-µ500-60 FOR ALL ECHELON AND LAN WIRING.

5) TO TAKE TRACK 1 (T1) AND TRACK 2 (T2) OUT OF SERVICE, JUMPER AC1T TO AC1B

6' X 6' BUNGALOW

PROPOSED D	M	Y	REVISIONS	D	C	COMPLETED D	M	Y	C

REGION SOUTHERN

SUB. CHICAGO 340

SIGNALS AND COMMUNICATIONS ENGINEERING — DES. PEA

05 JUNE 2008 — CH. RLC

GCP 4000/SSCCIIII
2-20 AMP CONTROLLERS W/ 2 ILODS
24000

THOMASBORO, IL

CH-117.95-09

SAFETRAN SYSTEM CORP.
LOUISVILLE DIVISION, LOUISVILLE, KY

SAFETRAN SYSTEMS CORPORATION

DES. : PEA	DATE: 08/05/08	JOB NO.: FIC410252	
CKD. : RLC	ISSUE DATE: N/A	EST. HRS.: N/A	
DWN. : PEA	PLAN NO.: N/A	SHEET 9 OF 15	
P. TIME: 08:10	P. DATE: 15-AUG-2008	CAD ID.: CH-117.95-09	

NO.	DATE	BY	DESCRIPTION	APP. BY
1				
2				
3				
4				
5				

CH-117.95-09, DWG
15-AUG-2008

WATERMARK

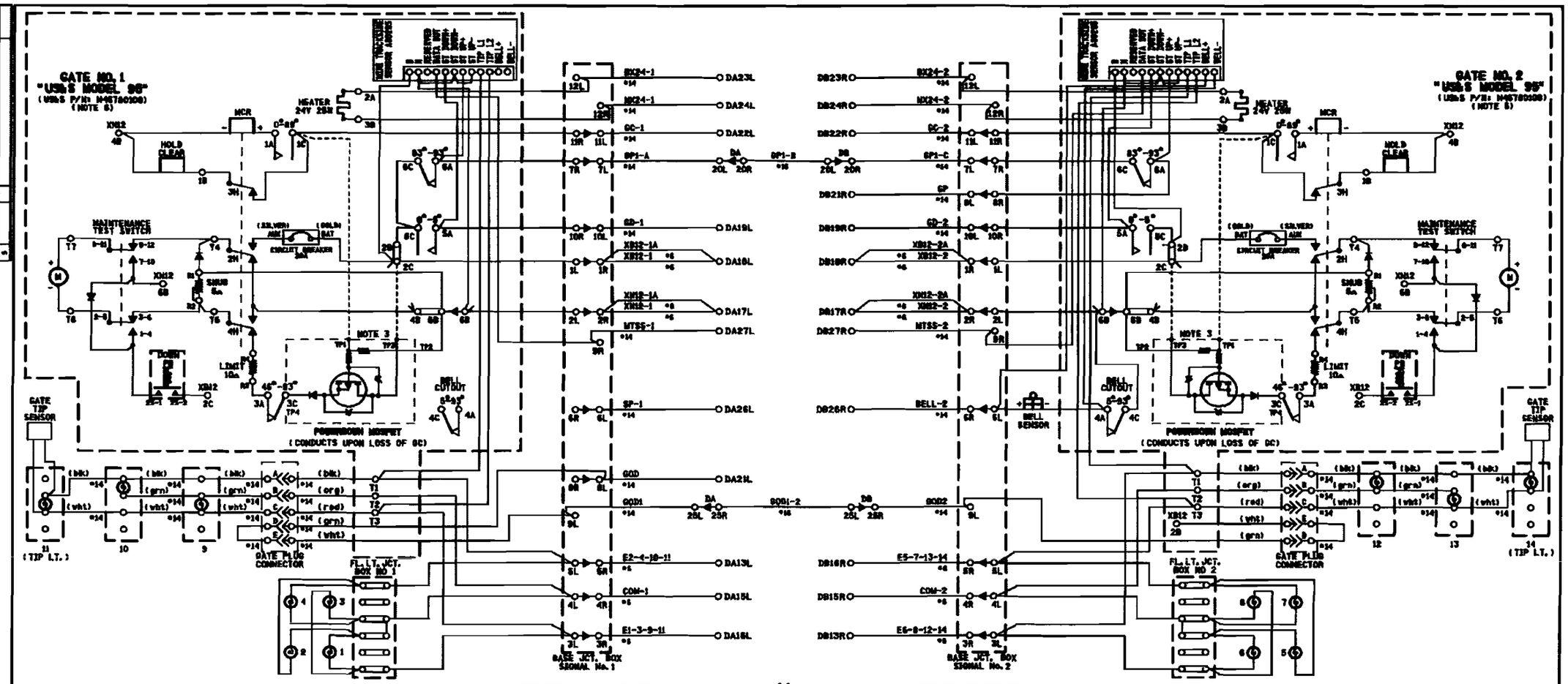

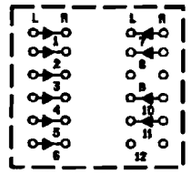

TERMINAL NUMBERING
BASE JCT. BOX 1

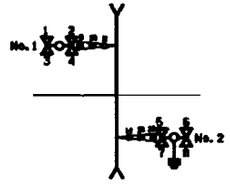

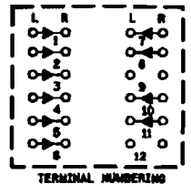

TERMINAL NUMBERING
BASE JCT. BOX 2

NOTES:

1) ON GATE No. 1 ADD STRAP BETWEEN TERMINAL 2B & 2C, ADD JUMPER BETWEEN TERMINAL 2B & 5C, BETWEEN TERMINAL 5C & 6C
2) ON GATE No. 2 ADD STRAP BETWEEN TERMINAL 2B & 2C AND JUMPER BETWEEN TERMINAL 2B & 5C AND CONNECT GP AS SHOWN
3) POWERDOWN PCB TERMINALS TP1, TP3 & TP4 FIT OVER TERMINALS 3C, 2C & 3C RESPECTIVELY
4) ALL WIRING #10 AWG MINIMUM UNLESS OTHERWIRE NOTED. WIRE SIZES SHOWN ARE MINIMUM GAUGE.
5) GATE DESCENT TIME (RELEASE FROM VERTICAL TO FULLY HORIZONTAL) TO BE WITHIN 11 SECONDS.
6) ENSURE ALL TERMINALS HAVE TWO SHOULDER NUTS.
7) FOR GATE(S) THAT HAS BELL, ADD JUMPER BETWEEN 4C AND 6B.

PROPOSED
DES. No. _____
RED-IN YELLOW-OUT
AS INSTALLED
DATE _____
BY _____

6' X 6' BUNGALOW

PROPOSED D	M	Y	REVISIONS	D	C	COMPLETED D	M	Y	C

REGION SOUTHERN
SUB. CHICAGO 34D
SIGNALS AND COMMUNICATIONS NORTHROOD
DES. PEA
05 JUNE 2008
CH. RLC
GATE MECHANISM CONTROL CIRCUITS
USS MODEL 96
2600M
THOMASBORO, IL
CH-117.95-10

SAFETRAN SYSTEM CORP.
LOUISVILLE DIVISION, LOUISVILLE, KY

SAFETRAN SYSTEMS CORPORATION
DES. : PEA DATE: 04/03/08 JOB NO. : PICAGO32
CKD. : RLC ISSUE DATE: N/A EST. NO. : N/A
DRN. : PEA PLAN NO. : N/A SHEET NO. OF 16
P TIME: 09:10 P DATE: 15-JUN-2008 CAD ID. : CH-117.95-10

NO.	DATE	BY	DESCRIPTION	APP. BY
1				
2				
3				
4				
5				

CH-117.95-10.DGN
15-AUG-2008

WATERMARK

NOTES:

1) CIRCUIT BREAKER NOT TO EXCEED 60 AMPERES. RETAINING KIT PK4MBRLA MUST BE USED WITH 60A BREAKER.
2) FRONT CIRCUIT BREAKER, AT STUB POLE SERVICE PANEL, NOT TO EXCEED 60 AMPERES.
3) A SWITCH TRANSFER KIT MUST BE INSTALLED BETWEEN THE SERVICE DISCONNECT BREAKER AND THE GENERATOR HOOK UP.
4) WHERE SEPARATE GROUND WIRE EXISTS BETWEEN THE SERVICE AND THE LOAD CENTER, REMOVE THE BRASS COLORED BONDING SCREW. (REFER TO SCHEMATIC ON BOX COVER FOR EXACT LOCATION)
5) S.C. #6 STRANDED, CSA TYPE R90 (X-LINK)
6) KEEP LEADS AS SHORT AS POSSIBLE
7) THE WHITE CONDUCTOR MUST BE MADE PERMANENTLY UNIDENTIFIABLE BY TAPING THIS CONDUCTOR RED. TAPING MUST BE CONTINUOUS WHERE THE SEPARATE CONDUCTORS HAVE BEEN MADE ACCESSIBLE AND VISIBLE.
8) ⊂ DENOTES WAGO TERMINAL
9) 24 VOLT - 40 WATT TRANSFORMER (CN STOCK #02-45-367)

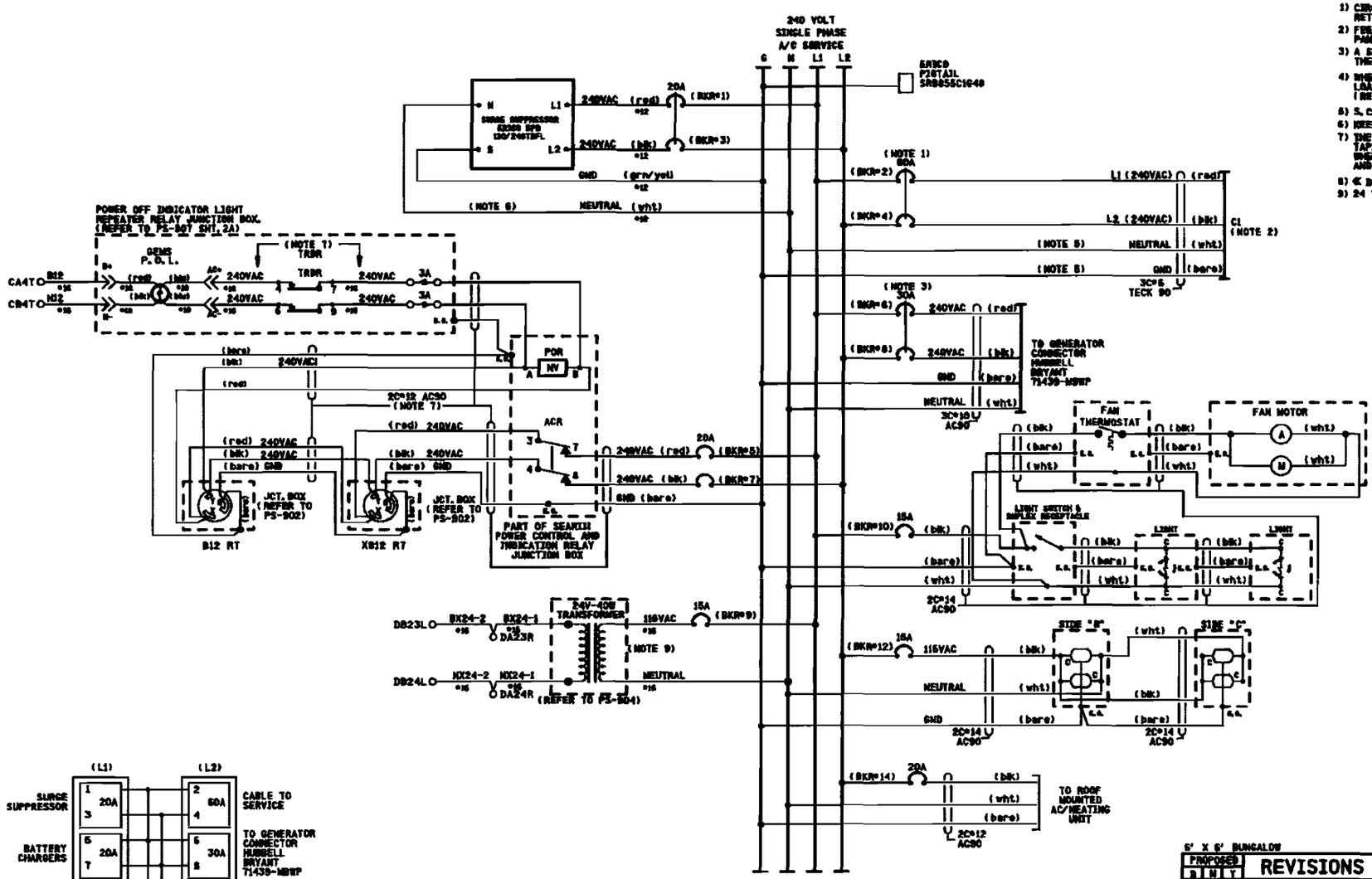

RELAY DETAIL

RELAY - POTTER & BRUMFIELD MODEL KUP-14A15-240 SOCKET MOUNTABLE 240 VDC W/ 3 FORM C CONTACTS.

SOCKET - SCREW TERMINAL MODEL 27E121.

RELAY WIRING DIAGRAM (REAR VIEW)

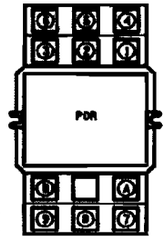

NOTE:
SOCKET NUMBERING CORRESPONDS DIRECTLY WITH RELAY NUMBERING. (COIL SHOWN ENERGIZED)

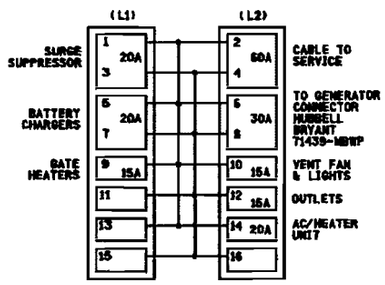

BREAKER POSITIONS

PROPOSED
DES. No. _____
RED-IN YELLOW-OUT
AS INSTALLED
DATE _____
BY _____

6' X 6' BUNGALOW

PROPOSED			REVISIONS	D	C	COMPLETED			C
D	M	Y				D	M	Y	

REGION SOUTHERN
SUB. CHICAGO 340
CN
DES. PEA
CH. RLC
05 JUNE 2008
POWER DISTRIBUTION AC 2600N
THOMASBORO, IL
CH-117.95-11

SAFETRAN SYSTEM CORP.
LOUISVILLE DIVISION, LOUISVILLE, KY

SAFETRAN SYSTEMS CORPORATION
DES. : PEA DATE: 06/05/08 JOB NO. : PTCA10152
CKD. : RLC ISSUE DATE: N/A EST. NO. : N/A
DRN. : PEA PLAN NO. : N/A SHEET 11 OF 16
P. TIME: 09:10 P. DATE: 15-AUG-2008 CAD ID. : CH-117.95-11

WATERMARK

REVISIONS				
NO.	DESCRIPTION	BY	DATE	APP. BY
1				
2				
3				
4				
5				

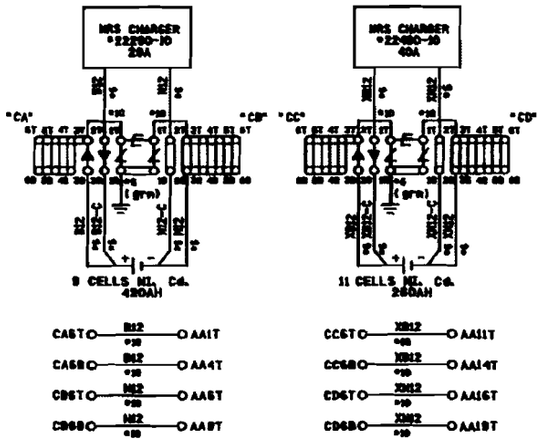

SAFETRAN SYSTEMS CORPORATION	
DES. : PEA	DATE: 06/05/08
CKD. : RLC	ISSUE DATE: N/A
DRW. : PEA	PLAN NO. :N/A
P. TIME:0811D	P. DATE: 18-AUG-2008
JOB NO. :PICA1052	
EST. NO. :N/A	
SHEET 12 OF 15	
CAD IB. :CH-117.95-12	

PROPOSED
DES. No. _____
RED-IN YELLOW-OUT
AS INSTALLED
DATE _____
BY _____

6' X 6' BUNGALOW

PROPOSED D	M	Y	REVISIONS	B	C	COMPLETED D	M	Y	C

REGION SOUTHERN
SUB. CHICAGO 340
CN
SIGNALS AND COMMUNICATIONS ENGINEERING
DES. PEA
05 JUNE 2008
CH. RLC
POWER DISTRIBUTION
DC
2560N
THOMASBORO, IL
CH-117.95-12
SAFETRAN SYSTEM CORP.
LOUISVILLE BRANCH, LOUISVILLE, KY

CH-117.95-12.DGN
18-AUG-2008

$WATERMARK

REVISIONS					
SYM.	DATE	BY	DESCRIPTION		APP. BY
1					
2					
3					
4					
5					

Program Report

Location and SIN

DOT Number: 289051L
Milepost Number: 117.95
Site Name: 2600N

SIN: T6R2R0R0R016

MCF and Template Selection

MCF Name: GCP-TRX-02-1.mcf
MCF Revision: 021
MCPCRC: 6DT6E435

Template = 1D:3 Uni pairs

Check Numbers

Office Check No. (DT 4.5.01): T6849A42
Office Check Number: T6849A42
Config. Check Number: 6828267C
(Based on MCF Revision 021)

Program

BASIC: module configuration
Track 1 Slot = Track
Track 2/RIO 1 Slot = Track
Track 3 Slot = Not Used
Track 4 Slot = Not Used
Track 5/RIO 2 Slot = Not Used
Track 6/RIO 3 Slot = Not Used
SSCC-1 Slot = SSCC31
SSCC-2 Slot = SSCC31
SEAR Used = Yes

BASIC: MS/GCP operation
Track 1 : MS/GCP Operation = Yes
Track 2 : MS/GCP Operation = Yes

BASIC: Island operation
Track 1 : Island Used = Internal
Track 2 : Island Used = No

BASIC: preemption
Preempt Logic = No

BASIC: radio Dax links
Radio DAX Link A Used = No
Radio DAX Link B Used = No

BASIC: Vital Comms links
Vital Comms link 1 Used = No
Vital Comms link 2 Used = No

PREDICTORS: track 1
Track 1 : Prime Used = Yes
Track 1 : Dax A Used = No
Track 1 : Dax B Used = No
Track 1 : Dax C Used = No
Track 1 : Dax D Used = No
Track 1 : Dax E Used = No
Track 1 : Dax F Used = No
Track 1 : Dax G Used = No

PREDICTORS: track 2
Track 2 : Prime Used = Yes
Track 2 : Dax A Used = No
Track 2 : Dax B Used = No
Track 2 : Dax C Used = No
Track 2 : Dax D Used = No
Track 2 : Dax E Used = No
Track 2 : Dax F Used = No
Track 2 : Dax G Used = No

GCP: track 1
Track 1 : GCP Freq Category = Standard
Track 1 : GCP Frequency = 156 Hz
Track 1 : Approach Distance = 4000 ft
Track 1 : Unk/BV/Sim-Bidirnl = Unidirnl
Track 1 : GCP Transmit Level = High
Track 1 : Island Connection = Isl
Track 1 : Island Distance = 237 ft
Track 1 : Computed Distance = 9999 ft
Track 1 : Linearization Steps = 100

GCP: track 1 enhanced det
Track 1 : Inbound PS Sensitivity = High
Track 1 : Speed Limiting Used = Yes
Track 1 : Outbound False Act Lvl = Normal
Track 1 : Outbound PS Timer = 20 sec
Track 1 : Trailing Switch Logic = On
Track 1 : Post Joint Both Time = 15 sec
Track 1 : Adv Appr Predn = No
Track 1 : Cancel Pickup Delay = This Isl

GCP: track 1 prime
Track 1 : Prime Warning Time = 26 sec
Track 1 : Prime Offset Distance = 0 ft
Track 1 : Switch MS EZ Level = 0
Track 1 : Prime MS/GCP Mode = Pred
Track 1 : Prime Pickup Delay = 30 sec
Track 1 : Prime MAX = Not Used

GCP: track 1 pos start
Track 1 : Positive Start = Off
Track 1 : Sudden Shnt Det Used = No
Track 1 : Low EZ Detection Used = No

GCP: track 1 MS Control
Track 1 : MS/GCP CtrlIP Used = No
Track 1 : MS Sensitivity Level = 0
Track 1 : Compensation Level = 1300
Track 1 : Warm Time-Bumpt Comp = High
Track 1 : Low EX Adjustment = 39
Track 1 : Bidirn Dax Passthru = No
Track 1 : False Act on Train Step = No
Track 1 : EX Limiting Used = Yes
Track 1 : EZ Correction Used = Yes

GCP: track 2
Track 2 : GCP Freq Category = Standard
Track 2 : GCP Frequency = 156 Hz
Track 2 : Approach Distance = 4000 ft
Track 2 : Unk/BV/Sim-Bidirnl = Unidirnl
Track 2 : GCP Transmit Level = High
Track 2 : Island Connection = Isl
Track 2 : Island Distance = 0 ft
Track 2 : Computed Distance = 9999 ft
Track 2 : Linearization Steps = 100

GCP: track 2 enhanced det
Track 2 : Inbound PS Sensitivity = High
Track 2 : Speed Limiting Used = Yes
Track 2 : Outbound False Act Lvl = Normal
Track 2 : Outbound PS Timer = 20 sec
Track 2 : Trailing Switch Logic = On
Track 2 : Post Joint Both Time = 15 sec
Track 2 : Adv Appr Predn = No
Track 2 : Cancel Pickup Delay = This Isl

GCP: track 2 prime
Track 2 : Prime Warning Time = 26 sec
Track 2 : Prime Offset Distance = 0 ft
Track 2 : Switch MS EZ Level = 0
Track 2 : Prime MS/GCP Mode = Pred
Track 2 : Prime Pickup Delay = 30 sec
Track 2 : Prime MAX = Not Used

GCP: track 2 pos start
Track 2 : Positive Start = Off
Track 2 : Sudden Shnt Det Used = No
Track 2 : Low EZ Detection Used = No

GCP: track 2 MS Control
Track 2 : MS/GCP CtrlIP Used = No
Track 2 : MS Sensitivity Level = 0
Track 2 : Compensation Level = 1300
Track 2 : Warm Time-Bumpt Comp = Low
Track 2 : Low EX Adjustment = 39
Track 2 : Bidirn Dax Passthru = No
Track 2 : False Act on Train Step = No
Track 2 : EX Limiting Used = Yes
Track 2 : EZ Correction Used = Yes

ISLAND: track 1
Track 1 : Isl Frequency = 8.3 kHz
Track 1 : Pickup Delay (2s +) = 0 sec
Track 1 : Isl Enable IP Used = No

AND: track Andlgc
AND 1 XR Used = Yes
AND 2 Used = No
AND 3 Used = No
AND 4 Used = No
AND 5 Used = No
AND 6 Used = No
AND 7 Used = No
AND 8 Used = No

AND: AND 1 XR
AND 1 XR Track 1 = Prime
AND 1 XR Track 2 = Prime
AND 1 Enable Used = Yes
And 1 Enable Pickup = 0 sec
AND 1 Enable Drop = 0 sec
AND 1 Wrap Used = No

ADVANCED: MS restart
MS/GCP Restart Used = No

ADVANCED: out of service
ODS Control = ODS IPs

ADVANCED: out of service 2
T1 ODS Control = ODS Input 1
T2 ODS Control = ODS Input 1
T1 ODS Controls = GCP and Island
T2 ODS Controls = GCP Only

ADVANCED: track wrap circuits
Wrap LBK Timer = 6 sec
Track 1 Wrap Used = No
Track 2 Wrap Used = No

ADVANCED: trk 1 overrides
Track 1 : All Predictors Override Used = No

ADVANCED: trk 2 overrides
Track 2 : All Predictors Override Used = No

ADVANCED: OR logic
OR 1 Used = No
OR 2 Used = No
OR 3 Used = No
OR 4 Used = No

ADVANCED: Internal I/O 1
Pass Thrus = No
Int.1 Data = Not Used
Int.1 Set by = Not Used
Int.2 Data = Not Used
Int.2 Set by = Not Used
Int.3 Data = Not Used
Int.3 Set by = Not Used
Int.4 Data = Not Used
Int.4 Set by = Not Used

ADVANCED: Internal I/O 2
Int.5 Data = Not Used
Int.5 Set by = Not Used
Int.6 Data = Not Used
Int.6 Set by = Not Used
Int.7 Data = Not Used
Int.7 Set by = Not Used
Int.8 Data = Not Used
Int.8 Set by = Not Used

ADVANCED: Internal I/O 3
Int.9 Data = Not Used
Int.9 Set by = Not Used
Int.10 Data = Not Used
Int.10 Set by = Not Used
Int.11 Data = Not Used
Int.11 Set by = Not Used
Int.12 Data = Not Used
Int.12 Set by = Not Used

ADVANCED: Internal I/O 4
Int.13 Data = Not Used
Int.13 Set by = Not Used
Int.14 Data = Not Used
Int.14 Set by = Not Used
Int.15 Data = Not Used
Int.15 Set by = Not Used
Int.16 Data = Not Used
Int.16 Set by = Not Used

ADVANCED: site options
Daylight Savings = On
Units = Standard
Maint Call Rpt IP Used = No
Emergency Activate IP = No
EZ/EX Logging = Change
EZ/EX Point Change = 3

SSCC
Gates Used = Yes
SSCC1:2 GPs Coupled = Yes
Min Activation = 20 sec
Rmt Activation Cancel = 3 min
Bell Ba Gate Strng = No
Mrlx Bell Ba Gate Down = No
SSCCIV Controller Used = No

SSCC: 1
SSCC-1 Activation = AND 1 XR
SSCC-1 Gate Delay = 3 sec
SSCC-1 Number of GPs = 1
SSCC-1 Number of GDs = 1
SSCC 1 : Flash Rate = 60
SSCC 1 : Low Battery Detection = No
SSCC 1 : Flash Sync = master
SSCC 1 : Invert Gate Output = No
SSCC 1 : Lamp Neutral Test = Off
Aux-1 Xng Ctrl Used = No

SSCC: 2
SSCC-2 Activation = AND 1 XR
SSCC-2 Gate Delay = 3 sec
SSCC-2 Number of GPs = 0
SSCC-2 Number of GDs = 1
SSCC 2 : Flash Rate = 60
SSCC 2 : Low Battery Detection = No
SSCC 2 : Flash Sync = slave
SSCC 2 : Invert Gate Output = No
SSCC 2 : Lamp Neutral Test = Off
Aux-2 Xng Ctrl Used = No

OUTPUT: assignment page 1
OUT 1.1 = Not Used
OUT 1.2 = Not Used
OUT 2.1 = Not Used
OUT 2.2 = Not Used

INPUT: assignment page 1
IN 1.1 = Not Used
IN 1.2 = Not Used
IN 2.1 = Not Used
IN 2.2 = Not Used

IO: assignment SSCC
OUT GC 1 = Gate Output 1
OUT GC 2 = Gate Output 2
IN 7.1 = AND 1 XR Enable
IN 7.2 = Not Used
IN 7.3 = Not Used
IN 7.4 = GD 1.1
IN 7.5 = GP 1.1
IN 8.1 = Out Of Service IP 1
IN 8.2 = Not Used
IN 8.3 = Not Used
IN 8.4 = GD 2.1
IN 8.5 = Not Used

SEAR
SEAR Subnode = 99
DI 1 = General1
DI 2 = Gnd Flt Tester 1
Rly 1 = Ground Fault Test
Rly 2 = AC Control

SEAR: Inputs
SP 2.1 = POK 1
SP 3.1 = Not Used
SP 4.1 = Not Used
SP 5.1 = Not Used
SP 6.1 = Not Used

SEAR: slot 1-4 inputs
IN 1.1 = Not Used
IN 1.2 = Not Used
IN 2.1 = Not Used
IN 2.2 = POK 2
IN 3.1 = Not Used
IN 3.2 = Not Used
IN 4.1 = Not Used
IN 4.2 = Not Used

SEAR: Inputs slot 5
IN 5.1 = Not Used
IN 5.2 = Not Used

SEAR: Inputs slot 6
IN 6.1 = Not Used
IN 6.2 = Not Used

SEAR: slot 7-8 inputs
IN 7.2 = Not Used
IN 7.3 = TSS 1
IN 8.2 = Not Used
IN 8.3 = TSS 2
IN 8.5 = Not Used

SITE: programming
Radio Subnode = 1
Field Password = Off
Low Battery Enabled = Off

Configuration Package File

Filename: 289051L.pac
Path: G:\Engineer\WING\GCP 4000 Program\IC\PICA10352\
Date/Time: 6/15/2008 9:57:12
DT Version: 4.7.5

TEMPLATE MTF-1D

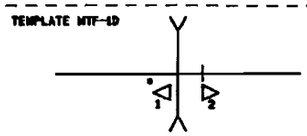

* INDICATES TRACK WITH ISLAND

NOTES:

1) DISTANCE(S) TO BE VERIFIED AT INSTALLATION. INDICATE SELECTED PROGRAMMED VALUE IF DIFFERENT THAN SHOWN. REFER TO 4000 GCP INSTRUCTION/INSTALLATION MANUAL FOR PROGRAMMING PARAMETERS.

2) PROGRAM TEXT HIGHLITED IN RED INDICATES 4000 PROGRAM MODIFICATIONS TO DEFAULT PROGRAM VALUES.

3) EACH CONSTANT WARNING DEVICE SYSTEM TO BE PROGRAMMED TO CONVERT TO A MOTION SENSOR 300 FEET FROM EDGE OF ROAD TRAVELLED WAY.
SHUNT TRACK 300 FEET FROM EDGE OF ROAD TRAVELLED WAY AND NOTE "EZ" VALUE.
PROGRAM EACH SYSTEM WITH THE INDICATED "EZ" VALUE +2.

4) VERIFY SET TIMER VALUE TO MATCH ACTUAL TRAIN MOVEMENT WITHIN THE CROSSING APPROACH CIRCUITS.

PROPOSED
DES. No. _____
RED-IN YELLOW-OUT
AS INSTALLED
DATE _____
BY _____

PROPOSED D	M	Y	REVISIONS	D	C	COMPLETION D	M	Y	C

REGION SOUTHERN
SUB. CHICAGO 340
CN

SIGNALS AND COMMUNICATION NORTHERN
DES. PEA
05 JUNE 2008
CHL RLC

GCP 4000
PROGRAM INFORMATION
2600N
THOMASBORO, IL
CH-117.95-13

SAFETRAN SYSTEM CORP.
LOUISVILLE DIVISION, LOUISVILLE, KY

SAFETRAN SYSTEMS CORPORATION

DES. : PEA	DATE: 06/05/08	JOB NO. : PICA10352	
CKD. : RLC	ISSUE DATE: N/A	EST. NO. N/A	
DWN. : PEA	PLAN NO. N/A	SHEET 13 OF 16	
P TIME: 08:10	P DATE: 16-JUL-2008	CAD IDL : CH-117.95-13	

CH-117.95-13.DGN
16-JUL-2008

WATERMARK

NO.	DATE	BY	DESCRIPTION	APP. BY
1				
2				
3				
4				
5				

TO CONFIGURE SEARII & SEARIII PRESS SITE SETUP KEY. USE ARROW KEYS TO MAKE SELECTION, PRESS ENTER AFTER SELECTION HAS BEEN MADE.

STAGE 1

PROGRAM MENU QUESTIONS	PROGRAM	OPTIONS/RANGE
DATE/TIME?	CURRENT DATE/TIME	CURRENT DATE/TIME
AUTOMATIC DST ADJUSTMENT?	YES	YES, NO
TIME ZONE?	EASTERN	EASTERN, CENTRAL, MOUNTAIN, PACIFIC, ALASKA, HAWAII, ATLANTIC, SASKATCHEWAN, NEW FOUNLAND
SITE NAME?	2600N	STREET NAME
MILE POST?	117.95	MILEAGE
DOT/CROSSING IS =?	299004L	
TESTER TYPE?	CROSSING	CROSSING, WAYSIDE
DATE FORMAT?	dd-mm-yyyy	mm-dd-yyyy, dd-mm-yyyy
TEMPERATURE FORMAT?	FAHRENHEIT	FAHRENHEIT, CELSIUS
SITE TYPE?	NO COM	NO COM, BULLHORN, DIALUP, MODE, COLLECTOR
SITE ATCS ADDRESS?	7.520.100.100.99.01	7.RRR.LLL.CCC.99.01
OFFICE ATCS ADDRESS?		2.RRR.MM.DDDD
(FOR MODE USE) PRIMARY MOP ADDR?		7.RRR.LLL.CCC.00.01
(FOR MODE USE) BACKUP MOP ADDR1?		7.RRR.LLL.CCC.00.01
(FOR MODE USE) BACKUP MOP ADDR2?		7.RRR.LLL.CCC.00.01
(FOR COLLECTOR USE) POLL ID?		1-99
(FOR COLLECTOR USE) MODE?		GEN/ATCS, GENISYS
(FOR COLLECTOR USE) WAMS/XID?		ENABLED, DISABLE
(FOR COLLECTOR USE) OFFICE COMM. DEVICE?		DIRECT (RS232) MCM (RS232) MCM (ECHELON) SPREAD SPEC (ECHELON) DIAL MODEM (RS232) 9200 RADIO (RS422)
(FOR COLLECTOR USE) OFFICE PHONE NUMBER?		PHONE NUMBER OF WAMS
(FOR COLLECTOR USE) INIT STRING?		OPTIONAL HAYES MODEM INITIALIZATION STRING
FIELD COMM. DEVICE?		VHF COMM. (ECHELON) VHF COMM. (RS232) SPREAD SPEC (ECHELON) SPREAD SPEC (RS232)
USER PORT?	57600, 8, N, 1, N	BAUD, DATA BITS, PARITY, STOP BITS, FLOW CONTROL
AUX PORT?	9600, 8, N, 1, N	BAUD, DATA BITS, PARITY, STOP BITS, FLOW CONTROL

YOU WILL NOW SEE A MESSAGE "PLEASE WAIT COMPILING STAGE 1"
CONTINUE TO NEXT PROGRAM MENU QUESTIONS.

STAGE 2

QUESTION	PROGRAM	SELECTION 1 (MINIMUM)	SELECTION 2 (MAXIMUM)	CONDITION FOR MENU DISPLAY
RESET NAMES / MODULES ?	NO	YES	NO	ALWAYS
RAILROAD NUMBER ?	360	1	999	ALWAYS
CROSSING CONFIGURATION	NORMAL	NORMAL	SPLIT GATE (NOTE 2)	ALWAYS
ENTRANCE GATES ?	2	0	8	ALWAYS
GATE POSTION FAIL TIME (SECONDS) ?	N/A	30	60	GATES > 0
BATTERY BANKS ?	2	1	3	ALWAYS
BATT MON USED ?	NO	NO	YES	ALWAYS
INTERNAL CROSSING CONTROLLERS ?	2	0	2	ALWAYS
EXTERNAL CROSSING CONTROLLERS ?	0	0	2	CROSSING CONTROLLER = YES
VHF COMMUNICATOR ?	YES	YES	NO	ALWAYS
DTMF ACTIVATION?	NO	NO	YES	RAILROAD = 360
ACTIVATION CODE ?	N/A	1	999	VHF COMMUNICATOR = YES
ACTIVATION TIMEOUT ?	N/A	1	600	VHF COMMUNICATOR = YES
ILOD MODULES ?	2	0	4	ALWAYS
ANY LED BULBS USED ?	YES	NO	YES	ILOD MODULES > 0
AUTO INSPECTION ?	NO	YES	NO	ALWAYS
BELL SENSORS ?	1	0	8	ALWAYS
BELL SENSORS TSS1 ?	NO	NO	YES	BELL SENSORS > 0
BELL SENSORS TSS2 ?	YES	NO	YES	BELL SENSORS > 0
BELL SENSORS TSS3 ?	N/A	NO	YES	BELL SENSORS > 0
BELL SENSORS TSS4 ?	N/A	NO	YES	BELL SENSORS > 0
BELL SENSORS TSS5 ?	N/A	NO	YES	BELL SENSORS > 0
BELL SENSORS TSS6 ?	N/A	NO	YES	BELL SENSORS > 0
BELL SENSORS TSS7 ?	N/A	NO	YES	BELL SENSORS > 0
BELL SENSORS TSS8 ?	N/A	NO	YES	BELL SENSORS > 0
BELL ON ?	GATES LOWERING	GATES LOWERING	GATES MOVING	BELL SENSORS > 0
GFI'S ?	YES	YES	NO	ALWAYS
BATTERIES ON GFI1 ?	2	1	2	GFI'S = YES
GATE TIP SENSORS ?	YES	YES	NO	GATES > 0
RTU ?	NO	NO	YES	ALWAYS
VHF VOICE CHANNEL ?	1 (NOTE 1)	1	8	VHF COMMUNICATOR = YES
VHF DATA CHANNEL ?	1 (NOTE 1)	1	8	VHF COMMUNICATOR = YES
USE CELL MODEM NON-CRITICAL FEATURE ?	NO	NO	YES	ALWAYS
FULL APPROACH MOVE ALARMS ?	ACTIVATE	ACTIVATE	DO NOT ACTIVATE	ALWAYS

YOU WILL NOW SEE A MESSAGE "PLEASE WAIT COMPILING STAGE 2"
CONTINUE TO NEXT PROGRAM MENU QUESTIONS.

STAGE 3

PROGRAM MENU QUESTIONS	PROGRAM
EDIT DIGITAL INPUTS	NO
EDIT BATTERIES	NO
EDIT RELAYS	NO
EDIT TEST LEDS	NO
EDIT ILOD SENSORS	NO
EDIT VHF SETTINGS	NO
GCP-4K ATCS SUBMODE?	15

SAVE CONFIGURATION

NOTES:
1) INDICATE SELECTION IN SPACE PROVIDED.
2) ADDITIONAL OPTIONS: DUAL CROSSING, EXTERNAL ENTRANCE GATE CONTROLLERS.

PROPOSED
DES. No. _____
RED-IN YELLOW-OUT
AS INSTALLED
DATE _____
BY _____

SEARII EXECUTIVE 9V725 REV. A01J, SEARII APPLICATION 9V884 REV. A01J

PROPOSED D	M	Y	REVISIONS	D	C	COMPLETED D	M	Y	C

REGION SOUTHERN
SUB. CHICAGO 340
SIGNALS AND COMMUNICATIONS ENGINEERING — DES. PEA
06 JUNE 2006 — CH. RLC
GCP 4000/SEAR III SETUP AND PROGRAM 2600N
THOMASBORO, IL
CH-117.95-14
SAFETRAN SYSTEM CORP. LOUISVILLE DIVISION, LOUISVILLE, KY

SAFETRAN SYSTEMS CORPORATION
DES.: PEA — DATE: 06/05/06 — JOB NO.: FTC419852
CHK.: RLC — ISSUE DATE: N/A — EST. NO.: N/A
DWN.: PEA — PLAN NO.: N/A — SHEET 14 OF 15
P TIME: 08:10 — P DATE: 18-AUG-2006 — CAD ID.: CH-117.95-14

CH-117.95-14.DWG
18-AUG-2006

WATERMARK

CH-117.95-15.DWG
19-AUG-2008

NO.	DATE	BY	DESCRIPTION	APP. BY
1				
2				
3				
4				
5				

CALIBRATION HISTORY

INITIAL SET UP BY: _____ DATE: _____

DC VOLTAGE READINGS AFTER CALIBRATION				CALIBRATION HISTORY										LINEARIZATION HISTORY (NOTE 1)							
				EZ/EX VALUES (TRACK UNOCCUPIED)				HARD WIRE SHUNT AT TERMINATION SHUNT						HARD WIRE SHUNT AT 50 PERCENT POINT OF SHUNT							
												50 PERCENT OF EZ VALUE		NO LINEARIZATION				LINEARIZATION COMPLETE			
				EZ		EX		EZ		EX				EZ		EX		STEP#		EZ	
				NRML	STBY	NRML	STBY	NRML	STBY	NRML	STBY	NRML	STBY	NRML	STBY	NRML	STBY	NRML	STBY	NRML	STBY
T1	Z1=	NORTH	TRACK 1		N/A		N/A		N/A		N/A		N/A		N/A		N/A		N/A		N/A
T1	Z2=	SOUTH	TRACK 1	N/A	N/A	N/A	N/A	N/A	N/A	N/A	N/A	N/A	N/A	N/A	N/A	N/A	N/A	N/A	N/A	N/A	N/A
T2	Z1=	NORTH	TRACK 2	N/A	N/A	N/A	N/A	N/A	N/A	N/A	N/A	N/A	N/A	N/A	N/A	N/A	N/A	N/A	N/A	N/A	N/A
T2	Z2=	SOUTH	TRACK 2		N/A		N/A		N/A		N/A		N/A		N/A		N/A		N/A		N/A

CALIBRATION HISTORY

INITIAL SET UP BY: _____ DATE: _____

DC VOLTAGE READINGS AFTER CALIBRATION				CALIBRATION HISTORY										LINEARIZATION HISTORY (NOTE 1)							
				EZ/EX VALUES (TRACK UNOCCUPIED)				HARD WIRE SHUNT AT TERMINATION SHUNT						HARD WIRE SHUNT AT 50 PERCENT POINT OF SHUNT							
												50 PERCENT OF EZ VALUE		NO LINEARIZATION				LINEARIZATION COMPLETE			
				EZ		EX		EZ		EX				EZ		EX		STEP#		EZ	
				NRML	STBY	NRML	STBY	NRML	STBY	NRML	STBY	NRML	STBY	NRML	STBY	NRML	STBY	NRML	STBY	NRML	STBY
T1	Z1=	NORTH	TRACK 1		N/A		N/A		N/A		N/A		N/A		N/A		N/A		N/A		N/A
T1	Z2=	SOUTH	TRACK 1	N/A	N/A	N/A	N/A	N/A	N/A	N/A	N/A	N/A	N/A	N/A	N/A	N/A	N/A	N/A	N/A	N/A	N/A
T2	Z1=	NORTH	TRACK 2	N/A	N/A	N/A	N/A	N/A	N/A	N/A	N/A	N/A	N/A	N/A	N/A	N/A	N/A	N/A	N/A	N/A	N/A
T2	Z2=	SOUTH	TRACK 2		N/A		N/A		N/A		N/A		N/A		N/A		N/A		N/A		N/A

CALIBRATION HISTORY

INITIAL SET UP BY: _____ DATE: _____

DC VOLTAGE READINGS AFTER CALIBRATION				CALIBRATION HISTORY										LINEARIZATION HISTORY (NOTE 1)							
				EZ/EX VALUES (TRACK UNOCCUPIED)				HARD WIRE SHUNT AT TERMINATION SHUNT						HARD WIRE SHUNT AT 50 PERCENT POINT OF SHUNT							
												50 PERCENT OF EZ VALUE		NO LINEARIZATION				LINEARIZATION COMPLETE			
				EZ		EX		EZ		EX				EZ		EX		STEP#		EZ	
				NRML	STBY	NRML	STBY	NRML	STBY	NRML	STBY	NRML	STBY	NRML	STBY	NRML	STBY	NRML	STBY	NRML	STBY
T1	Z1=	NORTH	TRACK 1		N/A		N/A		N/A		N/A		N/A		N/A		N/A		N/A		N/A
T1	Z2=	SOUTH	TRACK 1	N/A	N/A	N/A	N/A	N/A	N/A	N/A	N/A	N/A	N/A	N/A	N/A	N/A	N/A	N/A	N/A	N/A	N/A
T2	Z1=	NORTH	TRACK 2	N/A	N/A	N/A	N/A	N/A	N/A	N/A	N/A	N/A	N/A	N/A	N/A	N/A	N/A	N/A	N/A	N/A	N/A
T2	Z2=	SOUTH	TRACK 2		N/A		N/A		N/A		N/A		N/A		N/A		N/A		N/A		N/A

NOTE:

1) SET UP APPROACH LENGTH AND LINEARIZATION CALIBRATION
VERIFY THAT "ENHANCED DETECTION" MODE IS PROGRAMMED "OFF" BEFORE ATTEMPTING LINEARIZATION PROCEDURES.

PROPOSED
DES. No. _____
RED-IN YELLOW-OUT
AS INSTALLED
DATE _____
BY _____

PROPOSED D	M	Y	REVISIONS	D	C	COMPLETED D	M	Y	C

REGION SOUTHERN
SUB. CHICAGO 340
CN
SIGNALS AND COMMUNICATIONS WORKSHOP
DES. PEA
05 JUNE 2008
CH. RLC
GCP 4800
CALIBRATION HISTORY
2600M
THOMASBORO, IL
CH-117.95-15
15
SAFETRAN SYSTEM CORP.
LOUISVILLE NATIONAL COMMERCE, KY

SAFETRAN SYSTEMS CORPORATION

DES. : PEA	DATE: 06/05/08	JOB NO. : PTCA0062
CKD. : RLC	ISSUE DATE: N/A	EST. NO. : N/A
DRN. : PEA	PLAN NO. : N/A	SHEET 15 OF 15
P TIME: 08:10	P DATE: 19-AUG-2008	CAD ID. : CH-117.95-15

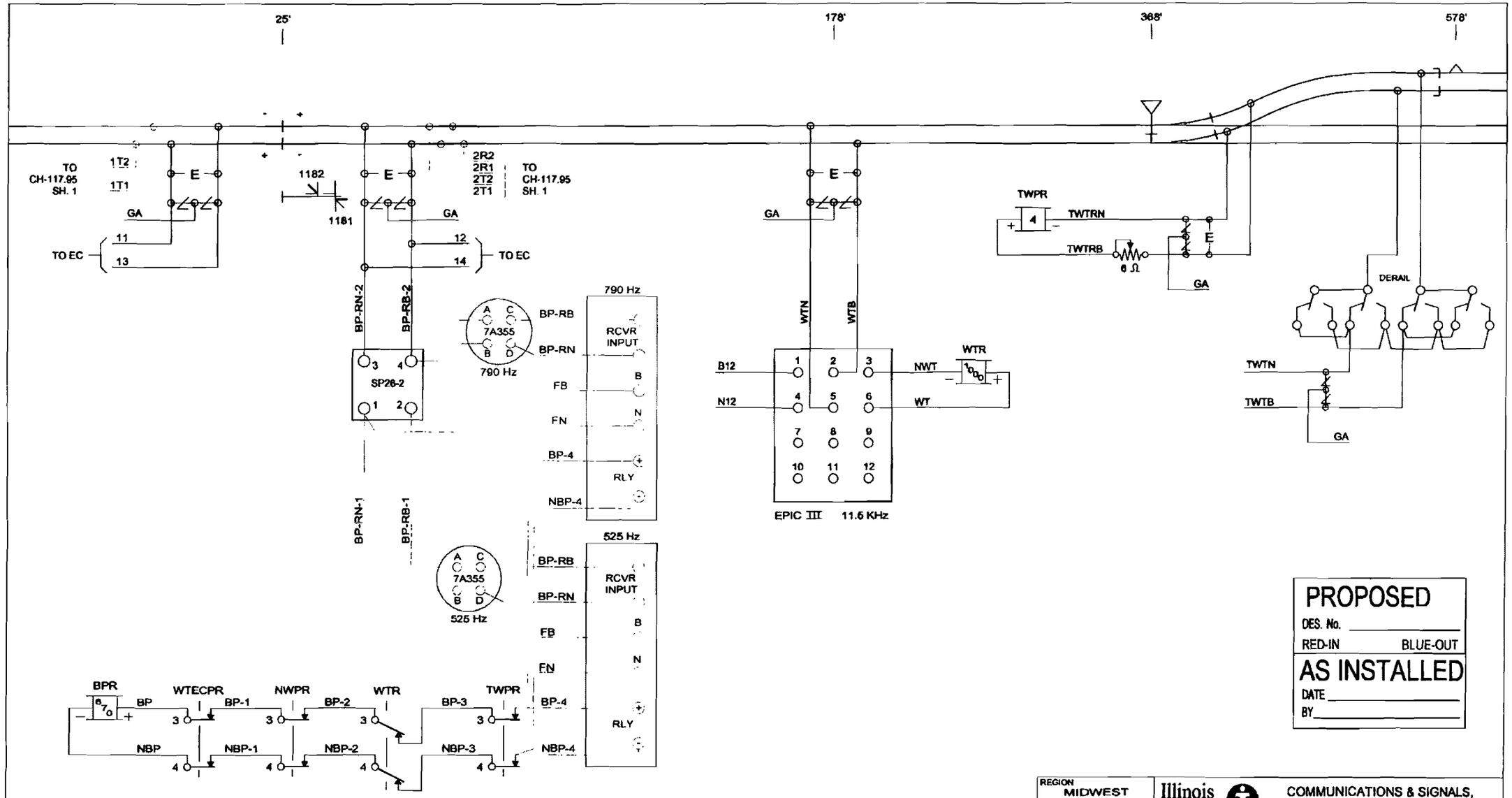

NOTE:
FIELD: REPLACE RCVR & COUPLER

PROPOSED
DES. No. _____
RED-IN BLUE-OUT
AS INSTALLED
DATE _____
BY _____

REGION MIDWEST	Illinois Central — COMMUNICATIONS & SIGNALS, ENGINEERING DEPARTMENT
DISTRICT CHICAGO	
FILENAME 11796C01	SD 1008 C MP 117.96 TO 118.44
DESIGNER AVS / DATE 1-10-97	THOMASBORO, IL
SHEET NO. 1 OF 3	SIGNALS 1181 / 1182 NORTH END - ELECTRIC LOCK

5 | 4 | 3 | 2 | 8-18-05 | 1 | REVISIONS

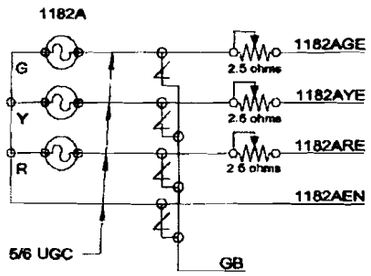

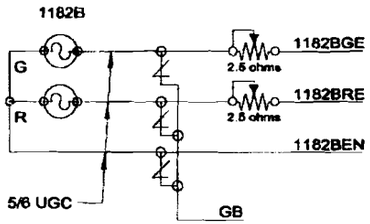

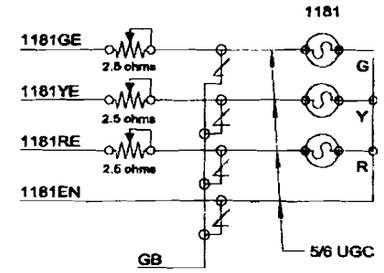

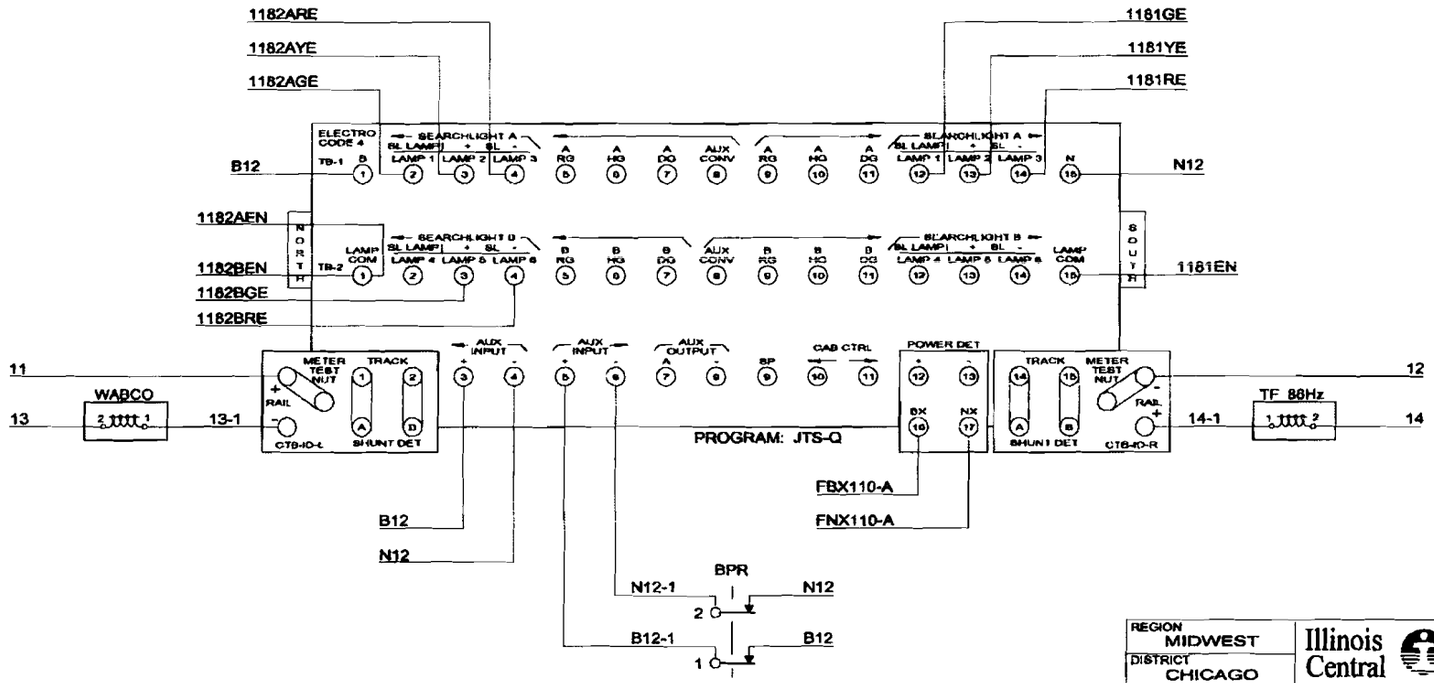

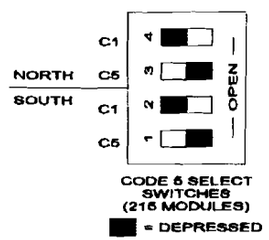

CODE 5 SELECT SWITCHES (215 MODULES)

■ = DEPRESSED

REGION MIDWEST	Illinois Central	COMMUNICATIONS & SIGNALS, ENGINEERING DEPARTMENT
DISTRICT CHICAGO		SD 1008 C MP 117.96 TO 118.44
FILENAME 11796C02		THOMASBORO, IL
DESIGNER AVS / DATE 1-10-97		SIGNALS 1181 / 1182 EC4
SHEET NO. 2 OF 3		

5 4 3 2 8-18-05 1 REVISIONS

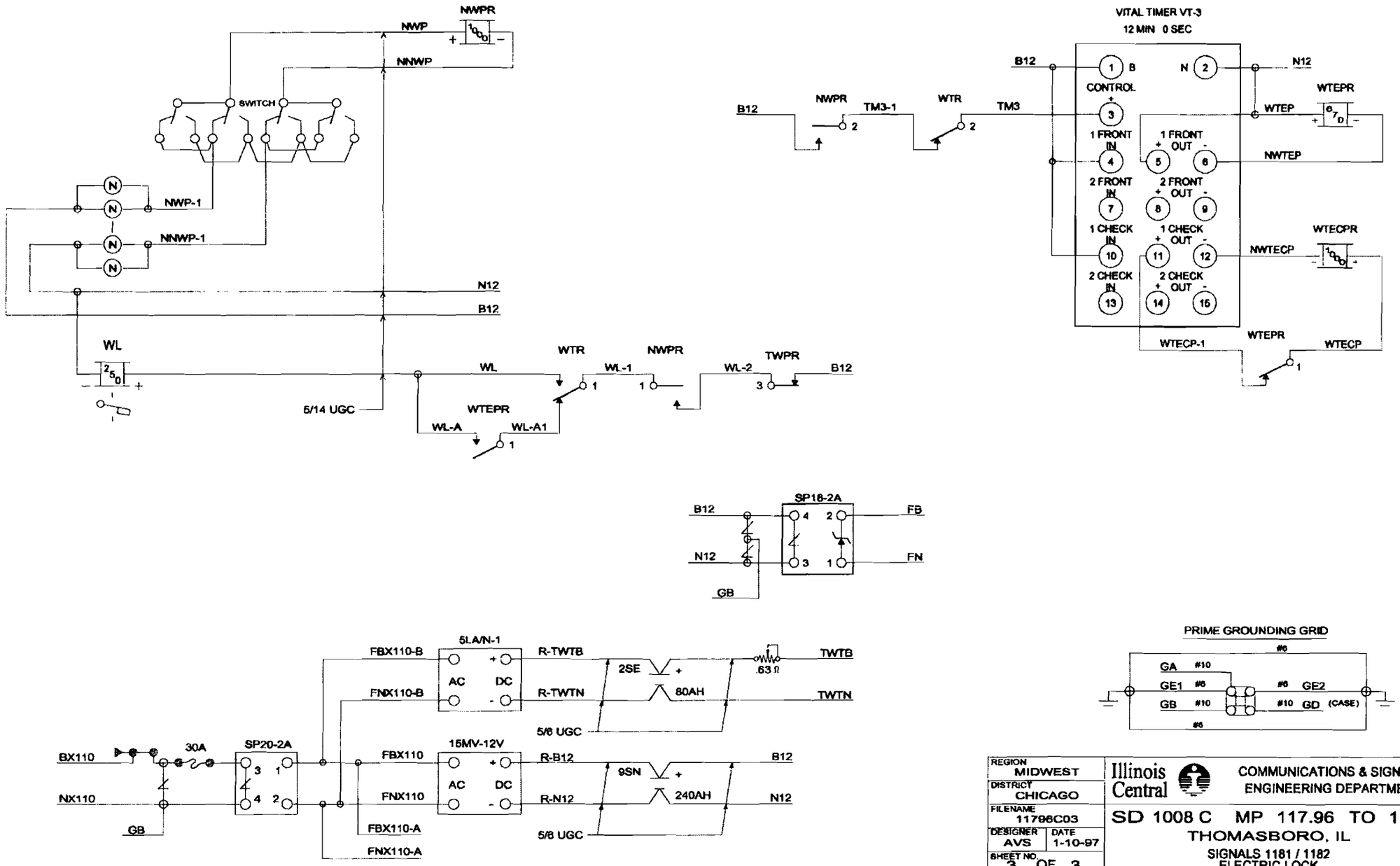

REGION MIDWEST	Illinois Central — COMMUNICATIONS & SIGNALS, ENGINEERING DEPARTMENT
DISTRICT CHICAGO	SD 1008 C MP 117.96 TO 118.44
FILENAME 11796C03	THOMASBORO, IL
DESIGNER AVS / DATE 1-10-97	SIGNALS 1181 / 1182 ELECTRIC LOCK
SHEET NO. 3 OF 3	

5 | 4 | 3 | 2 | 8-18-05 | 1 | REVISIONS

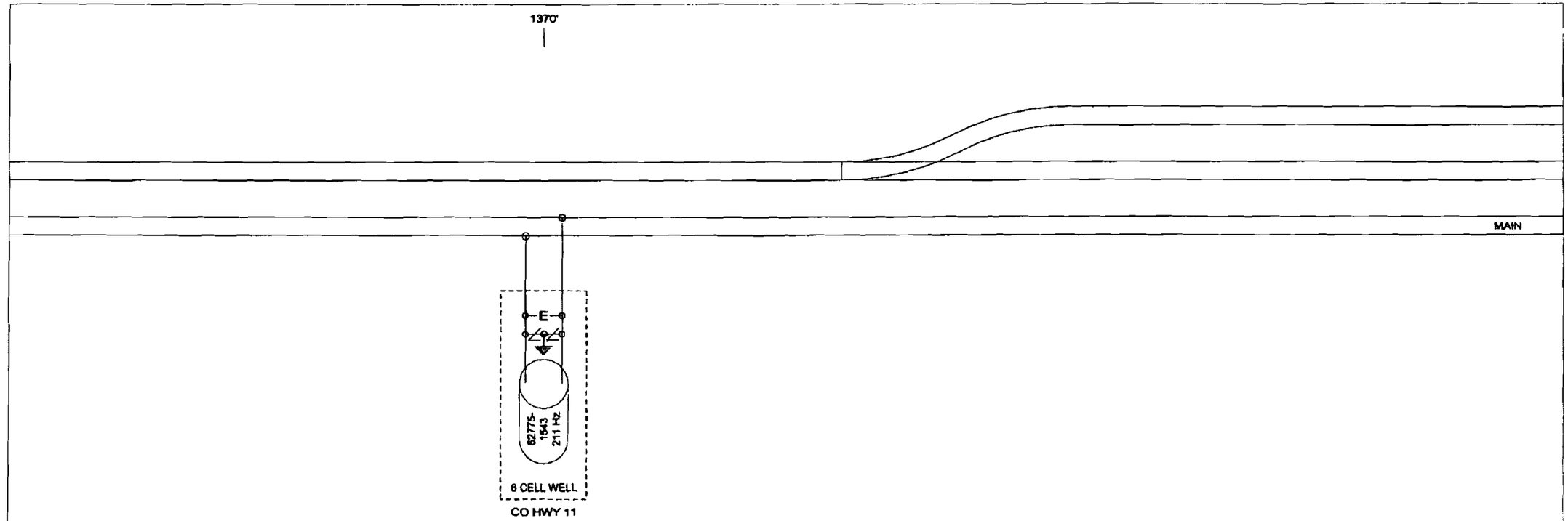

REGION MIDWEST	Illinois Central — COMMUNICATIONS & SIGNALS, ENGINEERING DEPARTMENT
DISTRICT CHICAGO	
FILENAME 11844C01	SD 1008 C MP 118.44 TO 118.70
DESIGNER AVS / DATE 5-19-98	THOMASBORO, IL
SHEET NO. 1 OF 1	SB START - CO HWY 11

5		4	9-27-05	3	7-3-98	2	6-29-95	1 REVISIONS

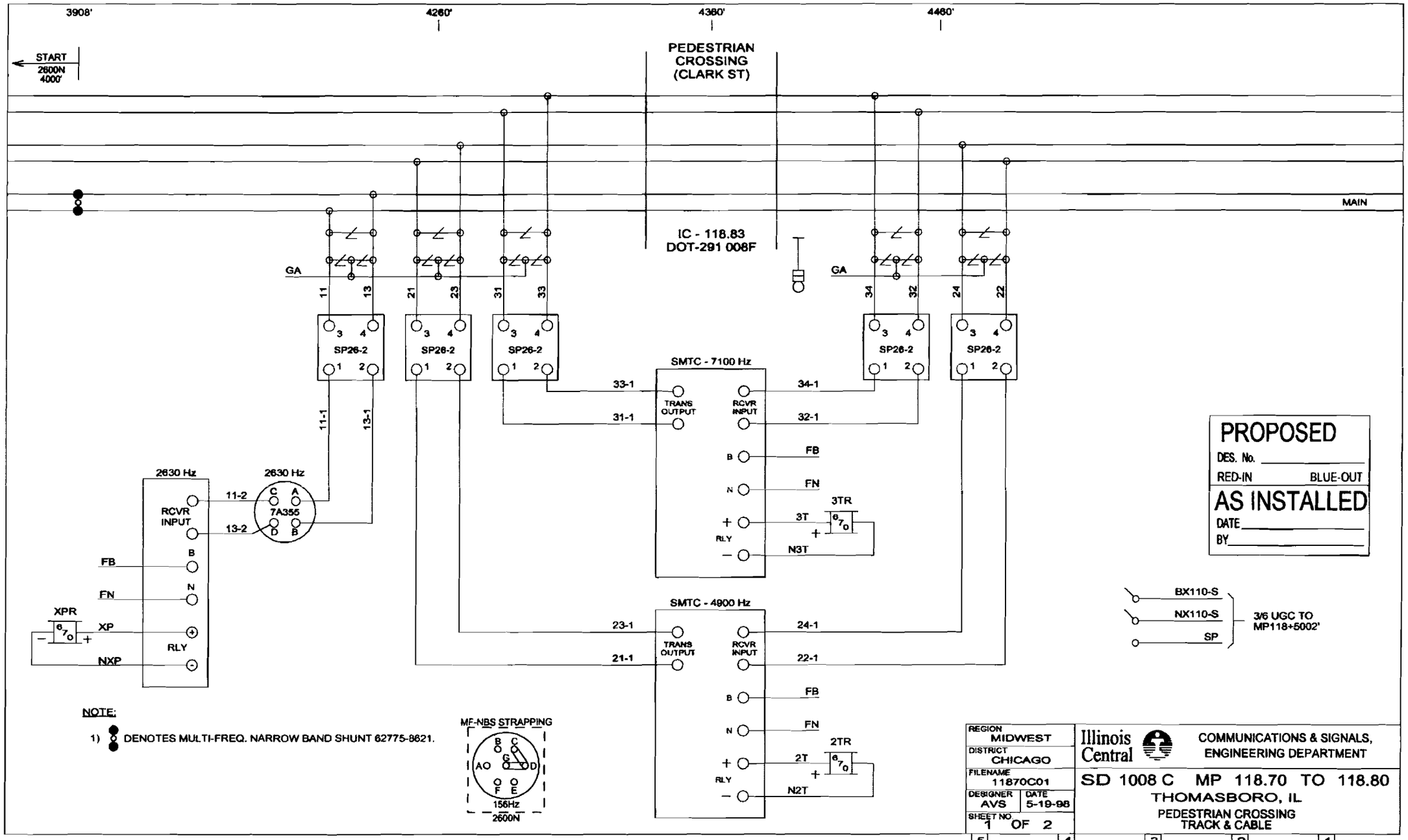
3908'
4260'
4380'
4460'
START
2600N
4000'
PEDESTRIAN
CROSSING
(CLARK ST)
MAIN
IC - 118.83
DOT-291 008F
GA
11
13
21
23
31
33
34
32
24
22
SP26-2
SMTC - 7100 Hz
TRANS OUTPUT
RCVR INPUT
33-1
31-1
34-1
32-1
B
FB
N
FN
+
3T
3TR
RLY
N3T
SMTC - 4900 Hz
23-1
21-1
24-1
22-1
2T
2TR
N2T
11-1
13-1
2630 Hz
7A355
11-2
13-2
XPR
XP
NXP
BX110-S
NX110-S
SP
3/6 UGC TO
MP118+5002'
PROPOSED
DES. No.
RED-IN
BLUE-OUT
AS INSTALLED
DATE
BY
NOTE:
1) DENOTES MULTI-FREQ. NARROW BAND SHUNT 62775-8621.
MF-NBS STRAPPING
156Hz
2600N
REGION MIDWEST
DISTRICT CHICAGO
FILENAME 11870C01
DESIGNER AVS
DATE 5-19-98
SHEET NO. 1 OF 2
Illinois Central
COMMUNICATIONS & SIGNALS,
ENGINEERING DEPARTMENT
SD 1008 C MP 118.70 TO 118.80
THOMASBORO, IL
PEDESTRIAN CROSSING
TRACK & CABLE
7-3-98
REVISIONS

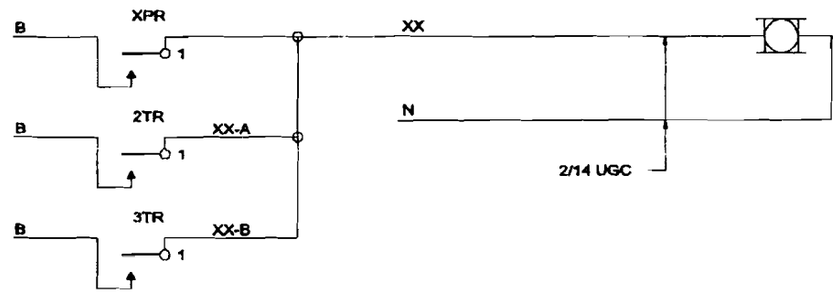

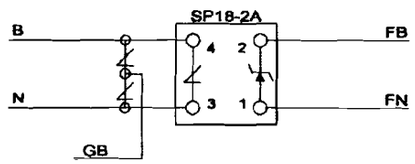

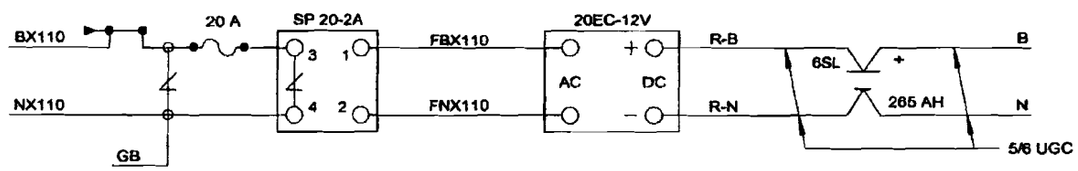

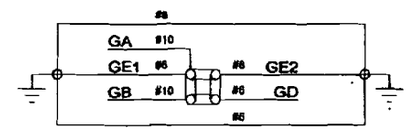

REGION MIDWEST	Illinois Central — COMMUNICATIONS & SIGNALS, ENGINEERING DEPARTMENT
DISTRICT CHICAGO	
FILENAME 11870C02	SD 1008 C MP 118.70 TO 118.80
DESIGNER AVS / DATE 5-19-98	THOMASBORO, IL
SHEET NO. 2 OF 2	PEDESTRIAN CROSSING POWER & BELL

5 | 4 | 3 | 2 | 7-3-98 | 1 | REVISIONS

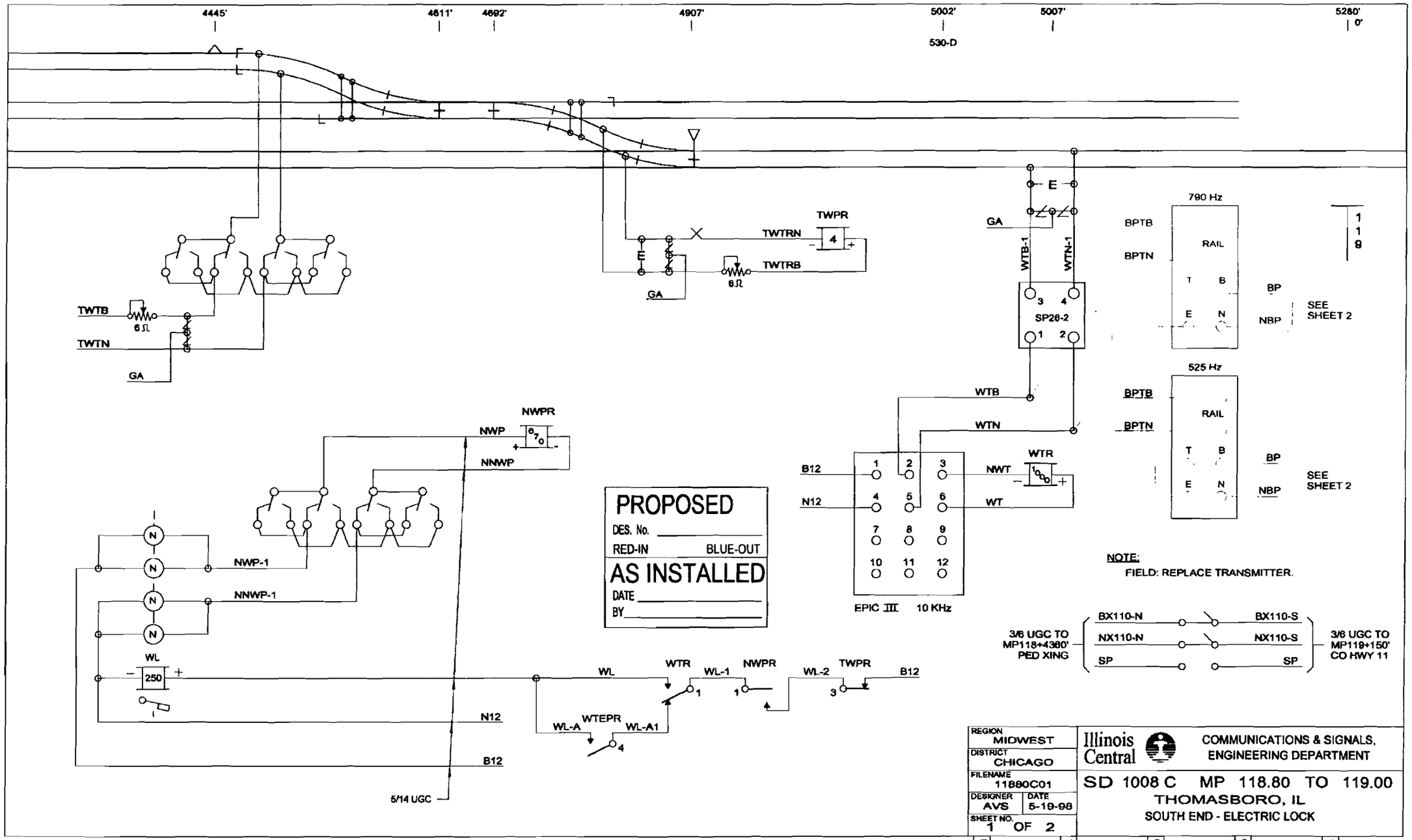

PROPOSED
DES. No. _____
RED-IN BLUE-OUT
AS INSTALLED
DATE _____
BY _____

NOTE:
FIELD: REPLACE TRANSMITTER.

REGION MIDWEST	Illinois Central — COMMUNICATIONS & SIGNALS, ENGINEERING DEPARTMENT
DISTRICT CHICAGO	SD 1008 C MP 118.80 TO 119.00
FILENAME 11880C01	THOMASBORO, IL
DESIGNER AVS / DATE 5-19-98	SOUTH END - ELECTRIC LOCK
SHEET NO. 1 OF 2	

5 | 4 | 3 | 2 | 6-29-95 | 1 | REVISIONS

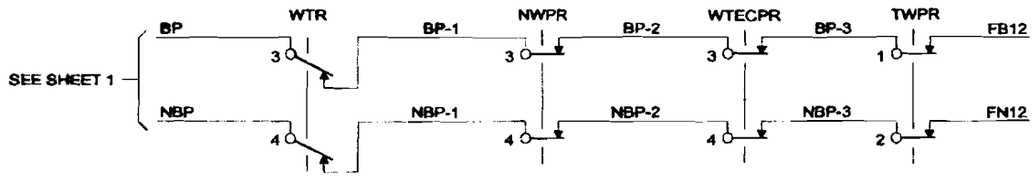

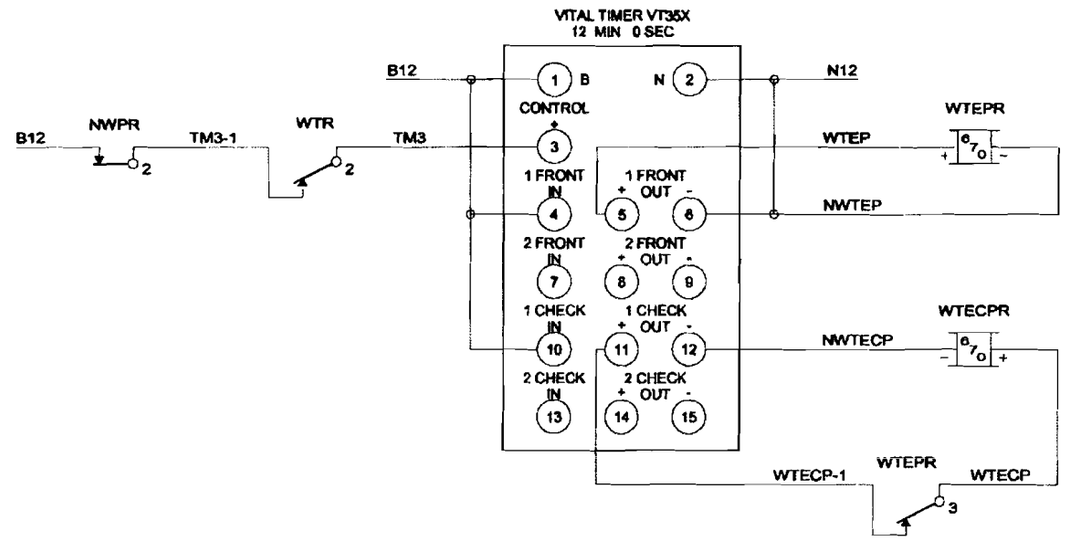

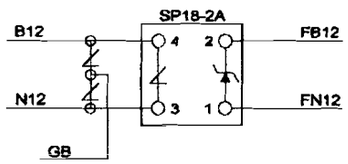

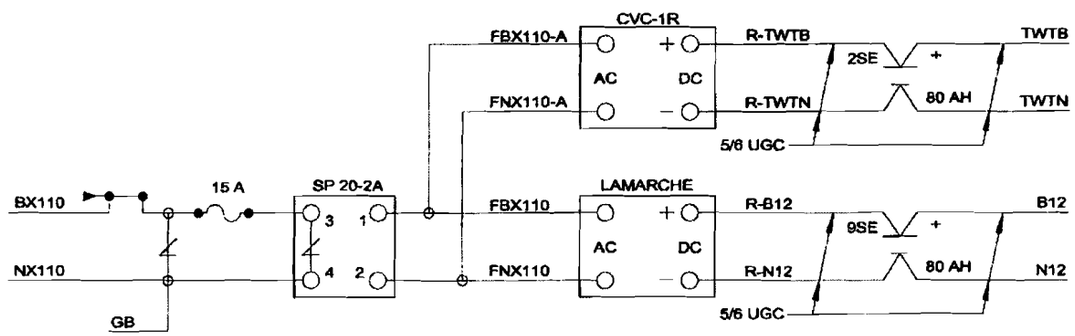

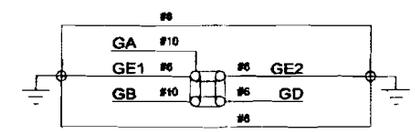

REGION MIDWEST	Illinois Central — COMMUNICATIONS & SIGNALS, ENGINEERING DEPARTMENT
DISTRICT CHICAGO	
FILENAME 11880C02	SD 1008 C MP 118.80 TO 119.00
DESIGNER AVS / DATE 5-19-98	THOMASBORO, IL
SHEET NO. 2 OF 2	SOUTH END - ELECTRIC LOCK

5 | 4 | 3 | 2 | 6-29-95 | 1 | REVISIONS