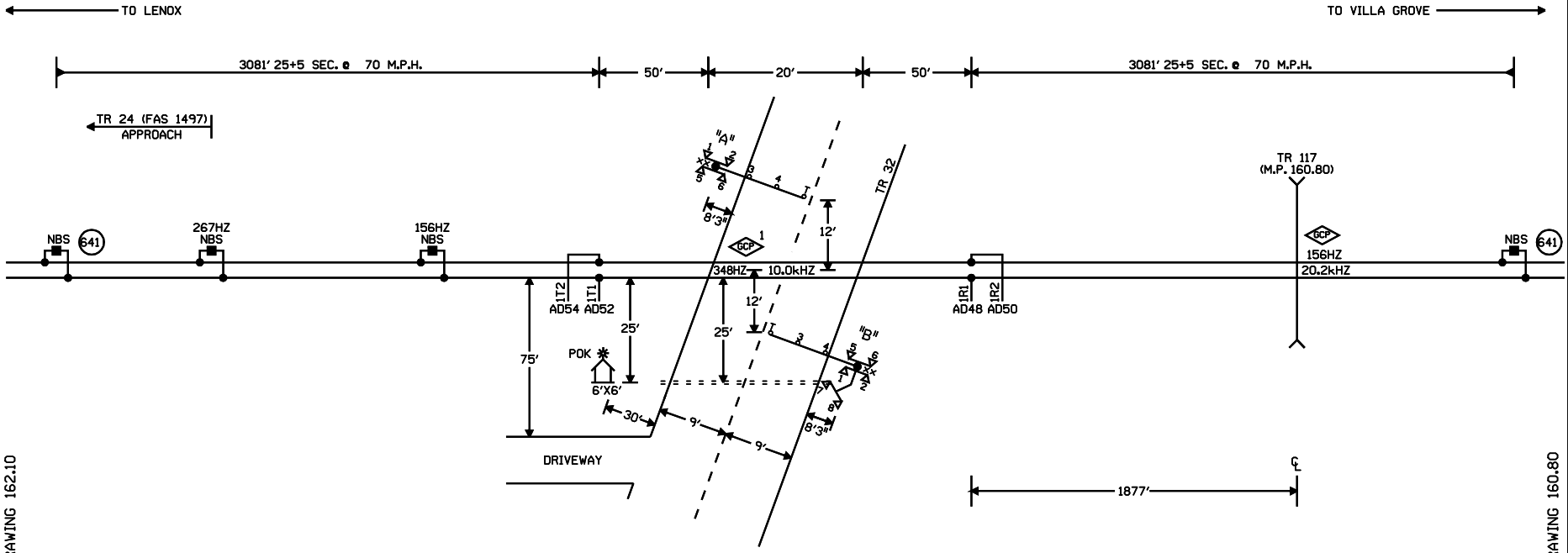

NOTES:

⊗ = TWISTED WIRES
INSULATED 1 TWIST PER FT.
ALL TRACK WIRES 2C. #6

TRANSMITTER AND RECEIVER LEADS
TO BE SEPARATED BY AT LEAST 12" IN TRENCH,
LENGTHS SHOULD NOT EXCEED MANUFACTURES
RECOMMENDATION.

TOP OF FOUNDATION TO BE AT SAME ELEVATION
AS THE SURFACE OF THE TRAVELED WAY & NO
MORE THAN 4" ABOVE THE SURFACE OF THE GROUND.

ALL BUNGALOW WIRING TO BE #16 AWG FLEX
UNLESS OTHERWISE SPECIFIED EXCEPT ALL GROUND
WIRE TO BE #6 AWG FLEX OR LARGER.

ALL WIRING IN GATE MECHANISM TO BE #10 "AWG FLEX".

REFER TO UP STANDARD DWG FOR BUNGALOW GROUNDING.

ALL LIGHTS TO BE 12" ROUNDELS.

= = = = = = 4" X 30' CONDUIT

LIGHTS: LED LIGHTS

GATE A: 17'
GATE B: 17'

xx = BELL

W(S) ← → E(N)

ARTHUR, ILLINOIS
TR 32
M.P. 161.20
PANA SUBDIVISION
D.O.T.#167 031M

NEW SHEET

03-07-08	INSTALL FLASHERS AND GATES WITH CWT AT M.P. 161.20
AFE 87084	JJL SSC/JJF

MODIFICATION LEVEL	
Q. A. LAST LEVEL CHECKED	DQ
LAST LEVEL MOD THIS TYPICAL	DQ
LAST LEVEL BY DESIGNER	DQ
CHANGED FROM TYPICAL?	Y
rev 02.01.00 4K 1TKBG.1	

UNION PACIFIC
QUALITY PRODUCTIVITY SAFETY
SIGNAL DESIGN

DES:	SSC
DIG:	SSC
CHK:	GRK
A.F.E.	87084
ID= 030116120.1X	

UNION PACIFIC RAILROAD

VILLA GROVE, ILLINOIS
TO LENOX, ILLINOIS
C.T.C. CIRCUITS

Office of Sr.AVP Engineering - Signal/TCO Omaha, Nebraska

DATE	03-07-08
SHEET	1
DWG	161.20

S-301

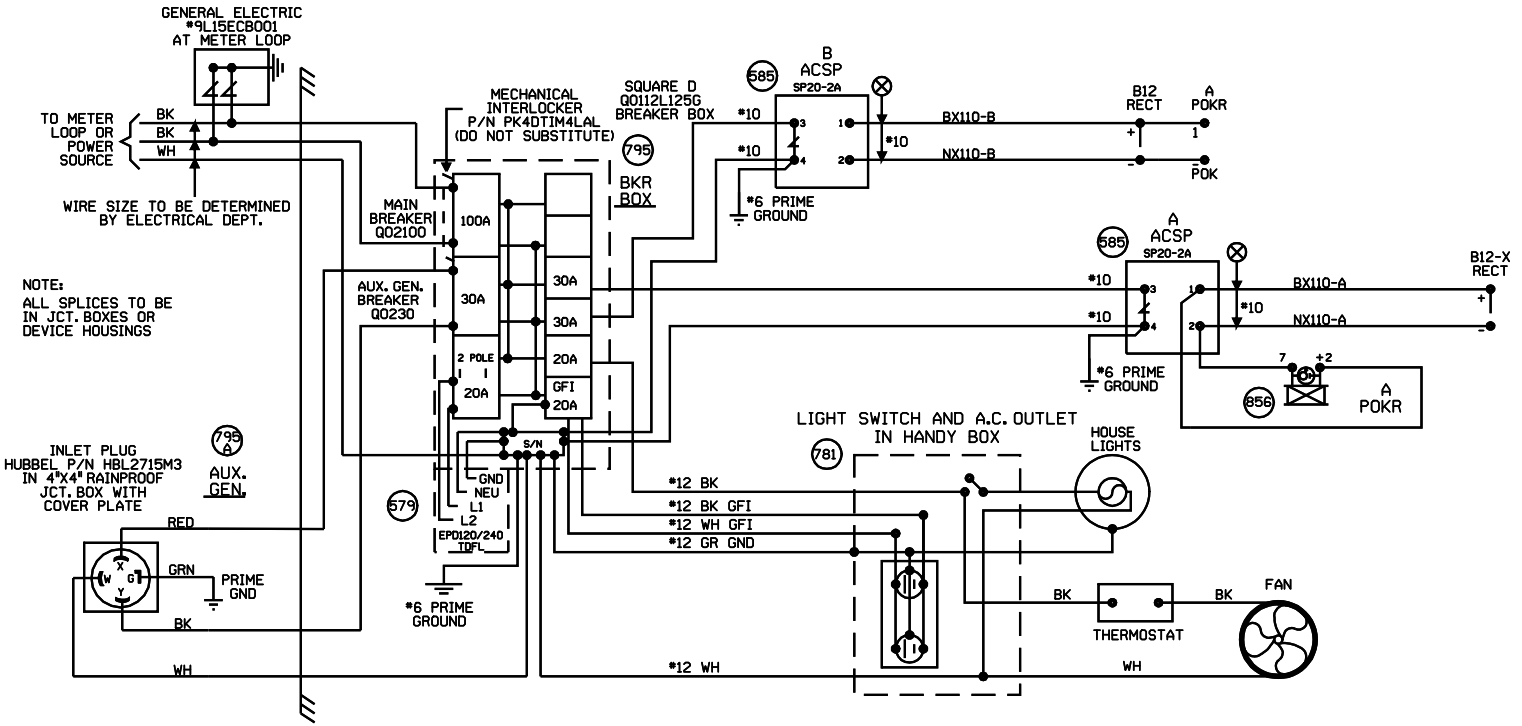

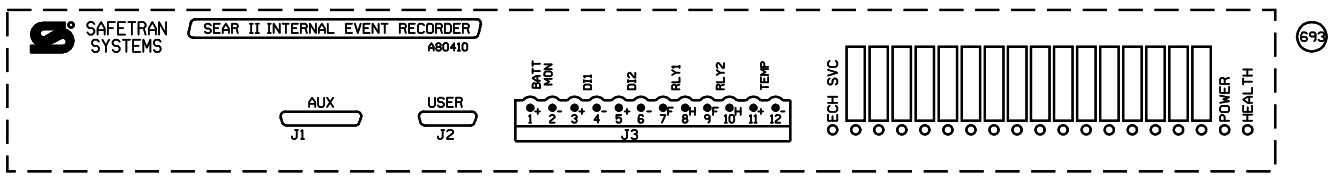

ARTHUR, ILLINOIS
TR 32
M.P. 161.20
PANA SUBDIVISION
D.O.T.#167 031M

NEW SHEET

03-07-08	INSTALL FLASHERS AND GATES WITH CWT AT M.P. 161.20
AFE 87084	JJL SSC/JJF

MODIFICATION LEVEL	
Q.A. LAST LEVEL CHECKED	DQ
LAST LEVEL MOD THIS TYPICAL	DQ
LAST LEVEL BY DESIGNER	DQ
CHANGED FROM TYPICAL?	N

rev 02.01.00 4K SEARAC.2

UNION PACIFIC
QUALITY PRODUCTIVITY SAFETY
SIGNAL DESIGN

DES: SSC
DIG: SSC
CHK: JJL
A.F.E. 87084
ID= 030116120.2X

UNION PACIFIC RAILROAD

VILLA GROVE, ILLINOIS
TO LENOX, ILLINOIS
C.T.C. CIRCUITS

Office of Sr.AVP Engineering - Signal/TCO Omaha, Nebraska

DATE 03-07-08
SHEET 2
DWG 161.20
S-301

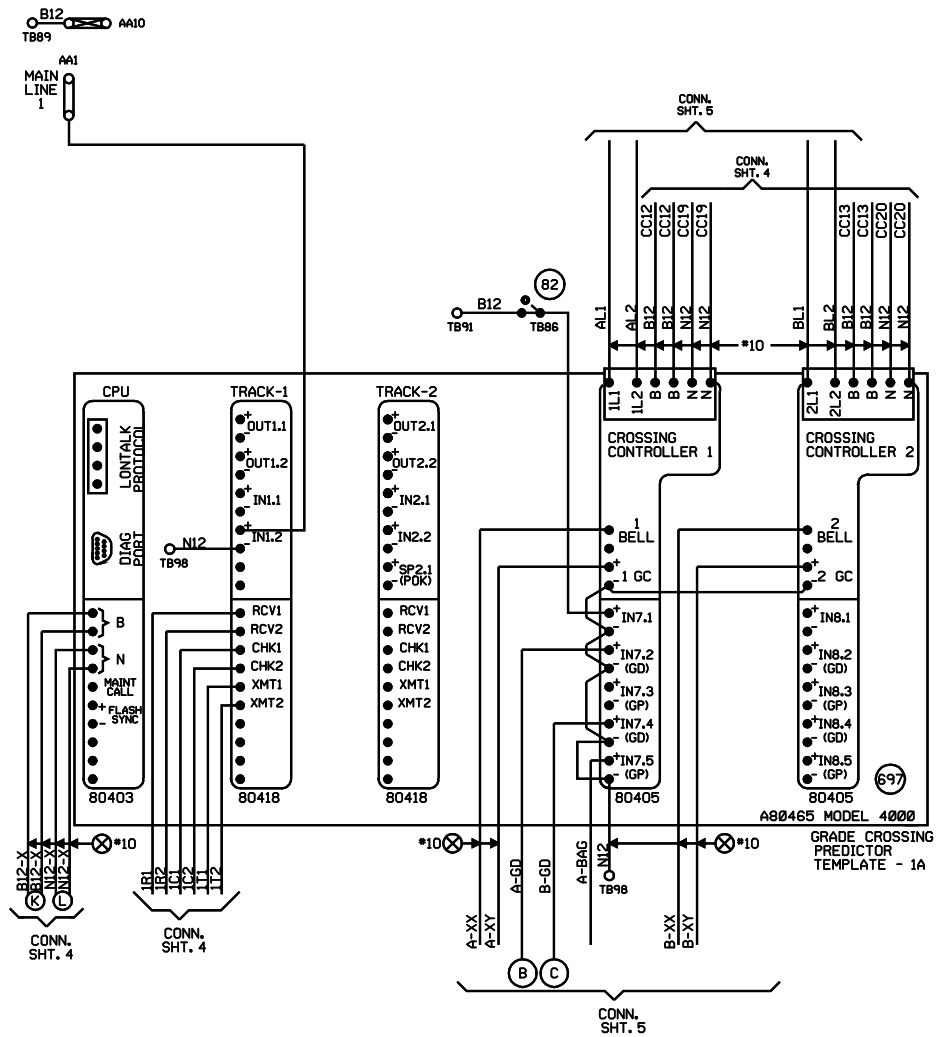

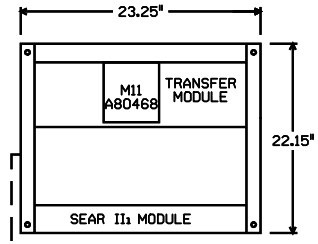

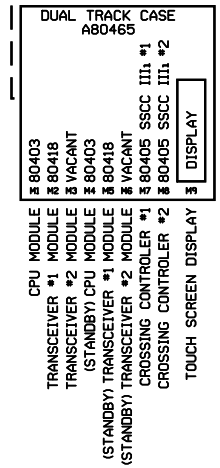

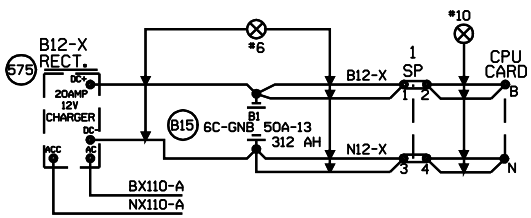

"Mf" FREQUENCY (HZ)	MAXIMUM TRANSMIT WIRE LENGTH (FEET)
86	100
114	125
156	150
211	200
285-970	250

NOTE:
EACH TRANSMITTER TO RAIL WIRE FROM XMT1 AND XMT2 MUST NOT EXCEED THE MAXIMUM LENGTH SPECIFIED IN THE TABLE SHOWN. THE RECEIVER WIRE LENGTH IS NOT CRITICAL. DOES NOT APPLY TO 6 TRACK WIRE APPLICATION.

NEW SHEET

ARTHUR, ILLINOIS
TR 32
M.P. 161.20
PANA SUBDIVISION
D.O.T.#167 031M

03-07-08
INSTALL FLASHERS AND GATES WITH CWT AT M.P. 161.20
AFE 87084 JJL
SSC/JJF

MODIFICATION LEVEL	
Q.A. LAST LEVEL CHECKED	DO
LAST LEVEL MOD THIS TYPICAL	DO
LAST LEVEL BY DESIGNER	DO
CHANGED FROM TYPICAL?	Y

rev 02.01.00 4K 2TKDF.3

UNION PACIFIC
QUALITY PRODUCTIVITY SAFETY
SIGNAL DESIGN

DES: SSC
DIG: SSC
CHK: JJL
A.F.E. 87084
ID= 030116120.3X

UNION PACIFIC RAILROAD
VILLA GROVE, ILLINOIS
TO LENOX, ILLINOIS
C.T.C. CIRCUITS
Office of Sr.AVP Engineering - Signal/TCO Omaha, Nebraska

DATE 03-07-08
SHEET 3
DWG 161.20
S-301

Minimum Program Steps Report

Location and SIN

DOT Number: 167031M
Milepost Number: 161.20
Site Name: ARTHUR, IL

SIN: 762010010016 *

* Parameter is part of office check number calculation.

MCF and Template Selection

MCF Name: GCP-T6X-01-2.mcf
MCF Revision: 012
MCFCRC: 0DFE7A0C

Template = 1A:6 Trk Bi *

* Parameter is part of office check number calculation.

Minimum Program Steps

TEMPLATE: track 1-Bi, Island
Track 1 : GCP Frequency = 348 Hz
Track 1 : Approach Distance = 3081 ft See Plans
Track 1 : Prime Warning Time = 25 sec *
Track 1 : GCP Transmit Level = Medium Set in Field
Track 1 : Isl Frequency = 10.0 kHz

TEMPLATE: AND 1 XR
AND 1 Enable Used = Yes *

TEMPLATE: IP assignment 1
IN 1.2 = Out Of Service IP 1 *

TEMPLATE: IP assignment SSCC
IN 7.1 = AND 1 XR Enable *

GCP: track 1
Track 1 : Island Distance = 120 ft *

ADVANCED: out of service
OOS Control = OOS IPs *

* Parameter is part of office check number calculation.

Check Numbers

Office Check Number: 0BEDE967
Config. Check Number: 15D80D80
(Based on MCF Revision 012)

Parameters not part of office check number calculation:

Track 1 : GCP Frequency = 348 Hz
Track 1 : Approach Distance = 3081 ft See Plans
Track 1 : GCP Transmit Level = Medium Set in Field
Track 1 : Isl Frequency = 10.0 kHz

Comments

<none>

Configuration Package File

Filename: 030116120 167031M.pac
Path: O:\UPRR\JXXD0U521\documents\gcp program\
Date/Time: 4/02/2008 15:38:53

ARTHUR, ILLINOIS
TR 32
M.P. 161.20
PANA SUBDIVISION
D.O.T.#167 031M

NEW SHEET

03-07-08
INSTALL FLASHERS
AND GATES WITH
CWT AT M.P.161.20

AFE 87084 JJL
SSC/JJF

NOTE: Actual OFFSET and ISLAND distances must be entered by field personnel.

UNION PACIFIC
QUALITY PRODUCTIVITY SAFETY
SIGNAL DESIGN

DES: SSC
DIG: SSC
CHK: JJL
A.F.E. 87084
ID= 030116120.3AX

UNION PACIFIC RAILROAD
VILLA GROVE, ILLINOIS
TO LENOX, ILLINOIS
C.T.C. CIRCUITS
Office of Sr.AVP Engineering - Signal/TCD Omaha, Nebraska

DATE 03-07-08
SHEET 3A
DWG 161.20
S-301

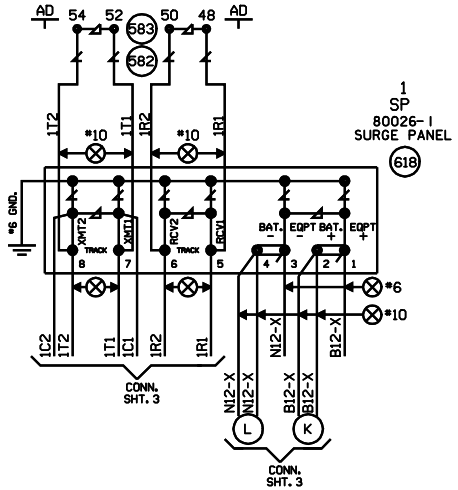

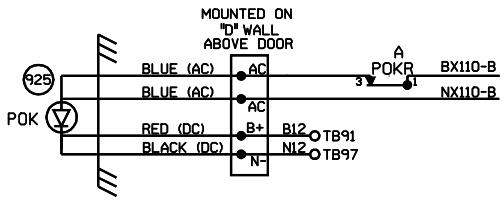

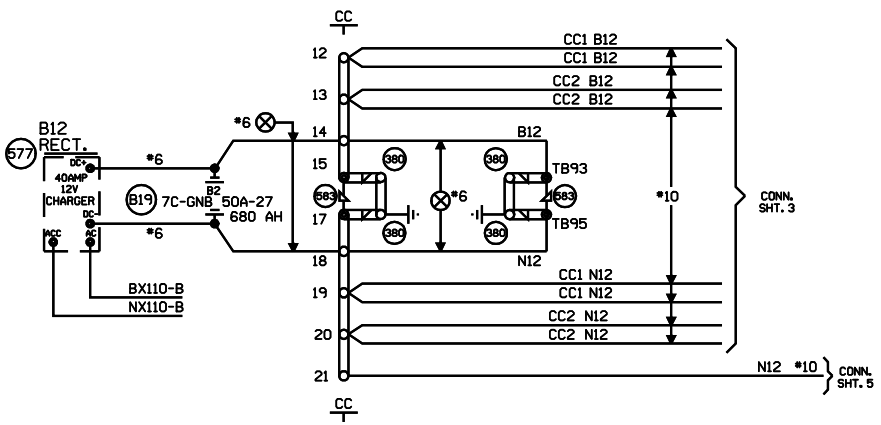

NEW SHEET

ARTHUR, ILLINOIS
TR 32
M.P. 161.20
PANA SUBDIVISION
D.O.T.#167 031M

03-07-08	INSTALL FLASHERS AND GATES WITH CWT AT M.P. 161.20
AFE 87084	JJL SSC/JJF

MODIFICATION LEVEL	
Q.A. LAST LEVEL CHECKED	DQ
LAST LEVEL MOD THIS TYPICAL	DQ
LAST LEVEL BY DESIGNER	DQ
CHANGED FROM TYPICAL?	Y

rev 02.01.00 4K 4TKSPGFC.4

UNION PACIFIC
QUALITY PRODUCTIVITY SAFETY
SIGNAL DESIGN

DES: SSC
DIG: SSC
CHK: JJL
A.F.E. 87084
ID= 030116120.4X

UNION PACIFIC RAILROAD

VILLA GROVE, ILLINOIS
TO LENOX, ILLINOIS
C.T.C. CIRCUITS

Office of Sr.AVP Engineering - Signal/TCO Omaha, Nebraska

DATE 03-07-08
SHEET 4
DWG 161.20
S-301

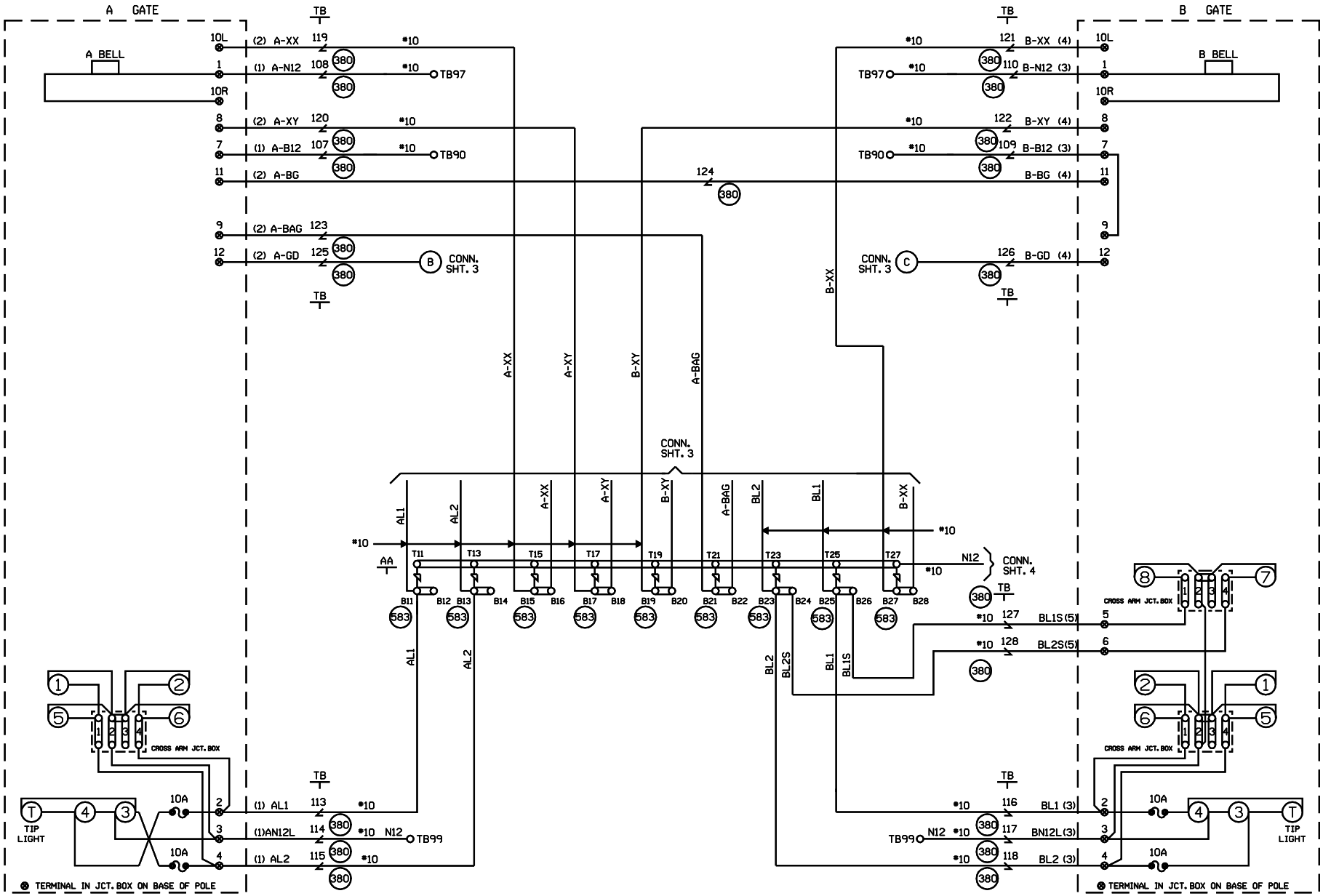

CABLE TABULATION

CABLE NO. 1 5C. NO.6 U.G.B.T.
CABLE NO. 2 7C. NO.14 U.G.B.T.
CABLE NO. 3 5C. NO.6 U.G.B.T.
CABLE NO. 4 7C. NO.14 U.G.B.T.
CABLE NO. 5 2C. NO.6 U.G.B.T.

NEW SHEET

ARTHUR, ILLINOIS
TR 32
M.P. 161.20
PANA SUBDIVISION
D.O.T.#167 031M

03-07-08
INSTALL FLASHERS AND GATES WITH CWT AT M.P. 161.20

AFE 87084 JJL
SSC/JJF

MODIFICATION LEVEL	
Q.A. LAST LEVEL CHECKED	DQ
LAST LEVEL MOD THIS TYPICAL	DQ
LAST LEVEL BY DESIGNER	DQ
CHANGED FROM TYPICAL?	Y

rev 02.01.00 4K GFSLTYP.5

UNION PACIFIC
QUALITY PRODUCTIVITY SAFETY
SIGNAL DESIGN

DES: SSC
DIG: SSC
CHK: JJL
A.F.E. 87084
ID= 030116120.5X

UNION PACIFIC RAILROAD

VILLA GROVE, ILLINOIS
TO LENOX, ILLINOIS
C.T.C. CIRCUITS

Office of Sr.AVP Engineering - Signal/TCO Omaha, Nebraska

DATE 03-07-08
SHEET 5
DWG 161.20
S-301

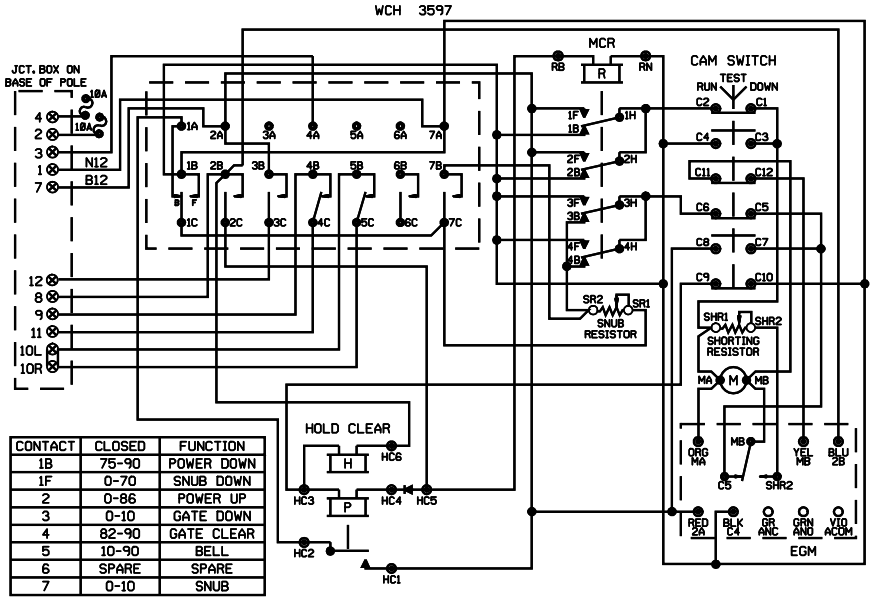

CONTACT	CLOSED	FUNCTION
1B	75-90	POWER DOWN
1F	0-70	SNUB DOWN
2	0-86	POWER UP
3	0-10	GATE DOWN
4	82-90	GATE CLEAR
5	10-90	BELL
6	SPARE	SPARE
7	0-10	SNUB

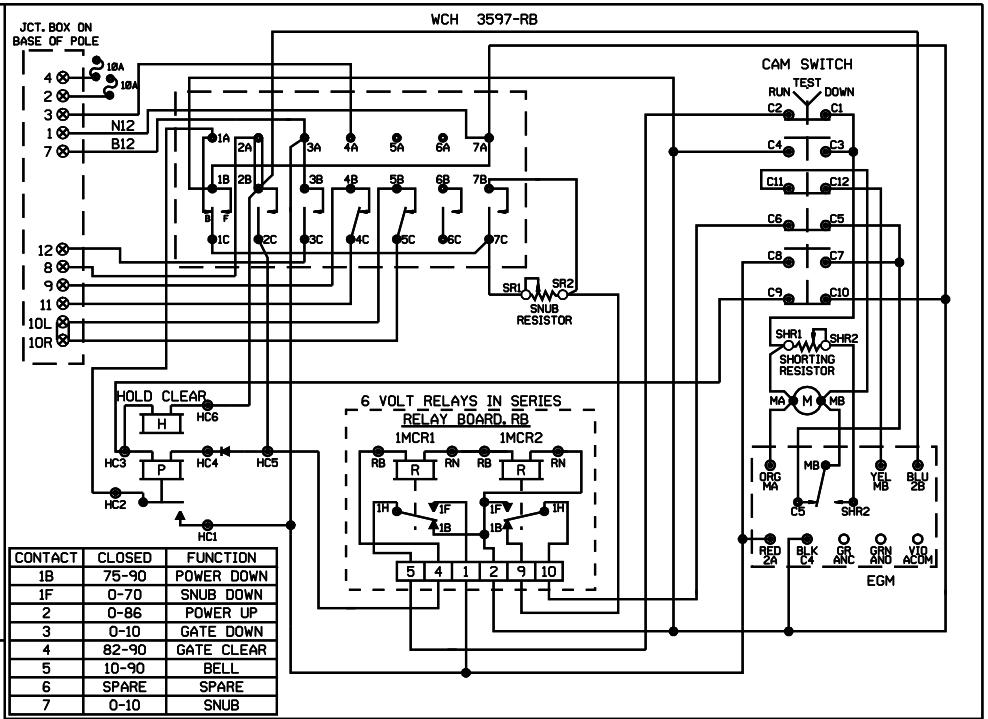

CONTACT	CLOSED	FUNCTION
1B	75-90	POWER DOWN
1F	0-70	SNUB DOWN
2	0-86	POWER UP
3	0-10	GATE DOWN
4	82-90	GATE CLEAR
5	10-90	BELL
6	SPARE	SPARE
7	0-10	SNUB

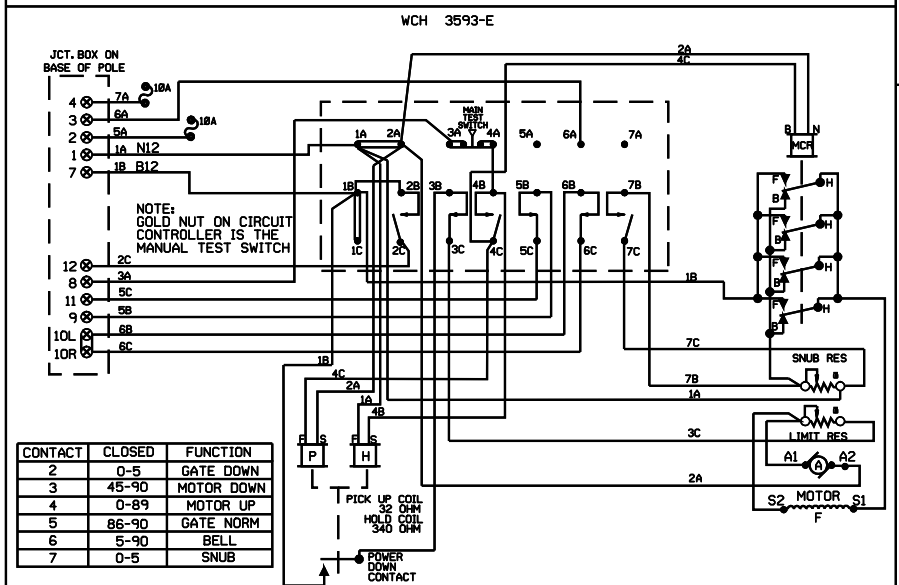

CONTACT	CLOSED	FUNCTION
2	0-5	GATE DOWN
3	45-90	MOTOR DOWN
4	0-89	MOTOR UP
5	86-90	GATE NORM
6	5-90	BELL
7	0-5	SNUB

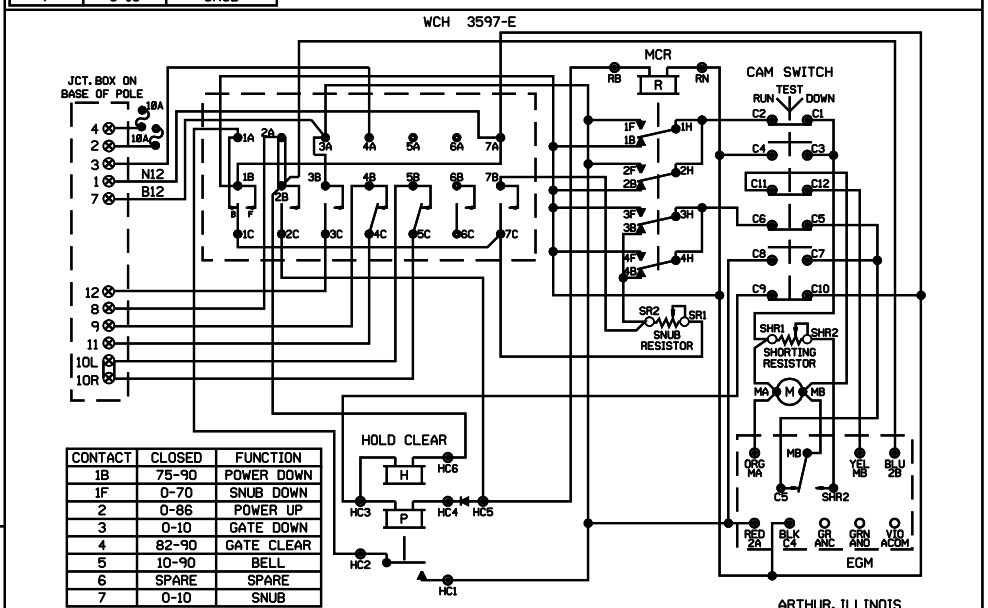

CONTACT	CLOSED	FUNCTION
1B	75-90	POWER DOWN
1F	0-70	SNUB DOWN
2	0-86	POWER UP
3	0-10	GATE DOWN
4	82-90	GATE CLEAR
5	10-90	BELL
6	SPARE	SPARE
7	0-10	SNUB

SHOW TYPE MECH. INSTALLED

ALL MECHANISMS SHOWN IN THE CLEAR POSITION

JCT. BOX ON BASE POLE

L	R	L	R
1	1	7	7
2	2	8	8
3	3	9	9
4	4	10	10
5	5	11	11
6	6	12	12

ARTHUR, ILLINOIS
TR 32
M.P. 161.20
PANA SUBDIVISION
D.O.T.#167 031M

NEW SHEET

03-07-08
INSTALL FLASHERS AND GATES WITH CWT AT M.P. 161.20

AFE 87084 JJL
SSC/JJF

MODIFICATION LEVEL	
Q.A. LAST LEVEL CHECKED	DQ
LAST LEVEL MOD THIS TYPICAL	DQ
LAST LEVEL BY DESIGNER	DQ
CHANGED FROM TYPICAL?	N

rev 02.01.00 4K GWIRING.DGN

UNION PACIFIC
QUALITY PRODUCTIVITY SAFETY
SIGNAL DESIGN

DES: SSC
DIG: SSC
CHK: JJL
A.F.E. 87084
ID= 030116120.6X

UNION PACIFIC RAILROAD

VILLA GROVE, ILLINOIS
TO LENOX, ILLINOIS
C.T.C. CIRCUITS

Office of Sr.AVP Engineering - Signal/TCO Omaha, Nebraska

DATE 03-07-08
SHEET 6
DWG 161.20
S-301

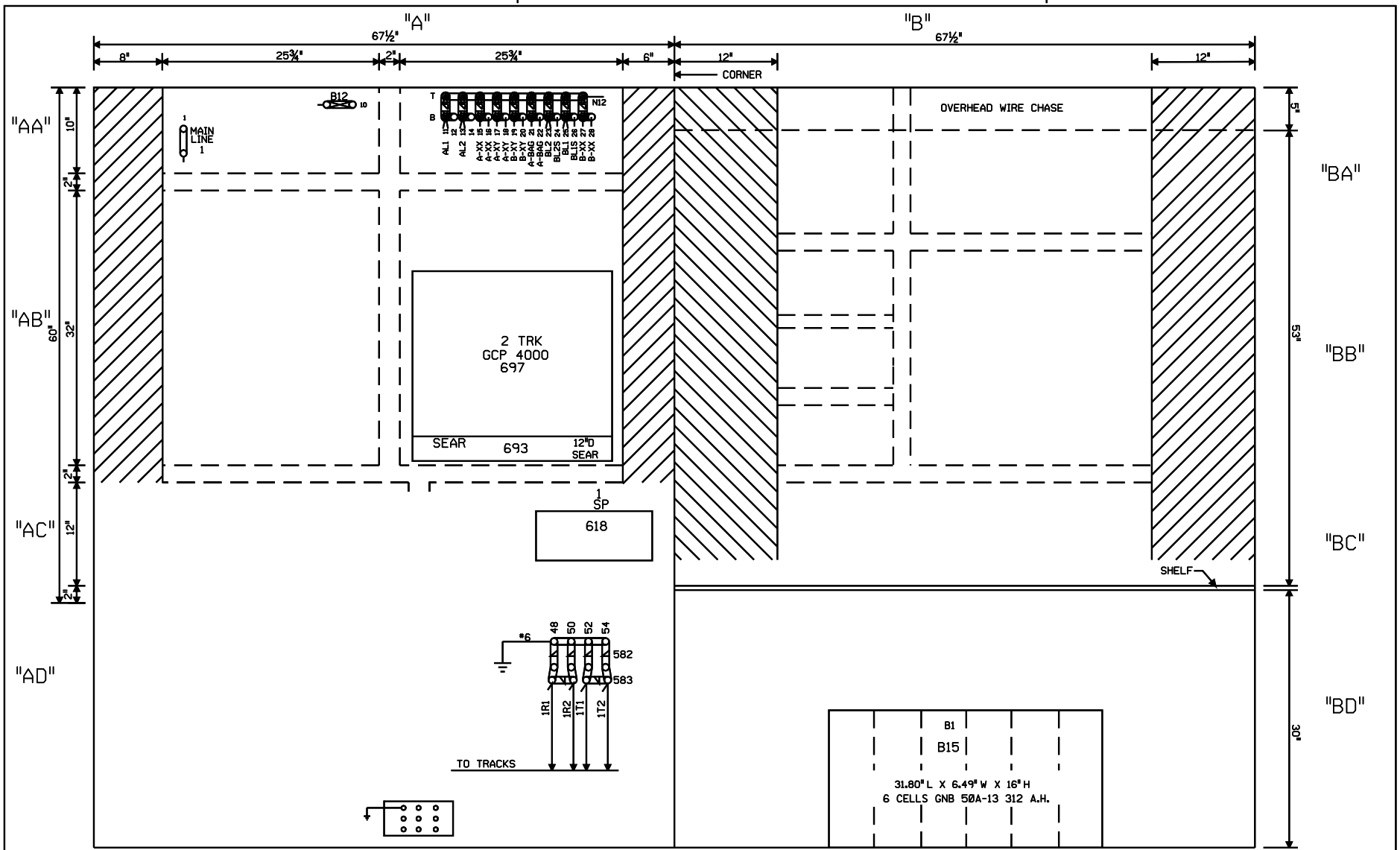

NOTE: ALL DIMENSIONS SHOWN ARE APPROXIMATE.

0 1 2 3 4 FEET

SCALE: 1.5 INCHES = 1 FOOT

ARTHUR, ILLINOIS
TR 32
M.P. 161.20
PANA SUBDIVISION
D.O.T.#167 031M

NEW SHEET

03-07-08	INSTALL FLASHERS AND GATES WITH CWT AT M.P. 161.20
AFE 87084	JJL SSC/JJF

MODIFICATION LEVEL	
D. A. LAST LEVEL CHECKED	DQ
LAST LEVEL MOD THIS TYPICAL	DQ
LAST LEVEL BY DESIGNER	DQ
CHANGED FROM TYPICAL?	Y

mw 02.01.08 4K 4TKGFC.8

UNION PACIFIC
QUALITY CONSISTENCY SAFETY
SIGNAL DESIGN

DES: SSC
DIG: SSC
CHK: JJL
A.F.E. 87084
ID= 030116120.7X

UNION PACIFIC RAILROAD

VILLA GROVE, ILLINOIS
TO LENOX, ILLINOIS
C.T.C. CIRCUITS

Office of Sr.AVP Engineering - Signal/TCO Omaha, Nebraska

DATE 03-07-08
SHEET 7
DWG 161.20
S-301

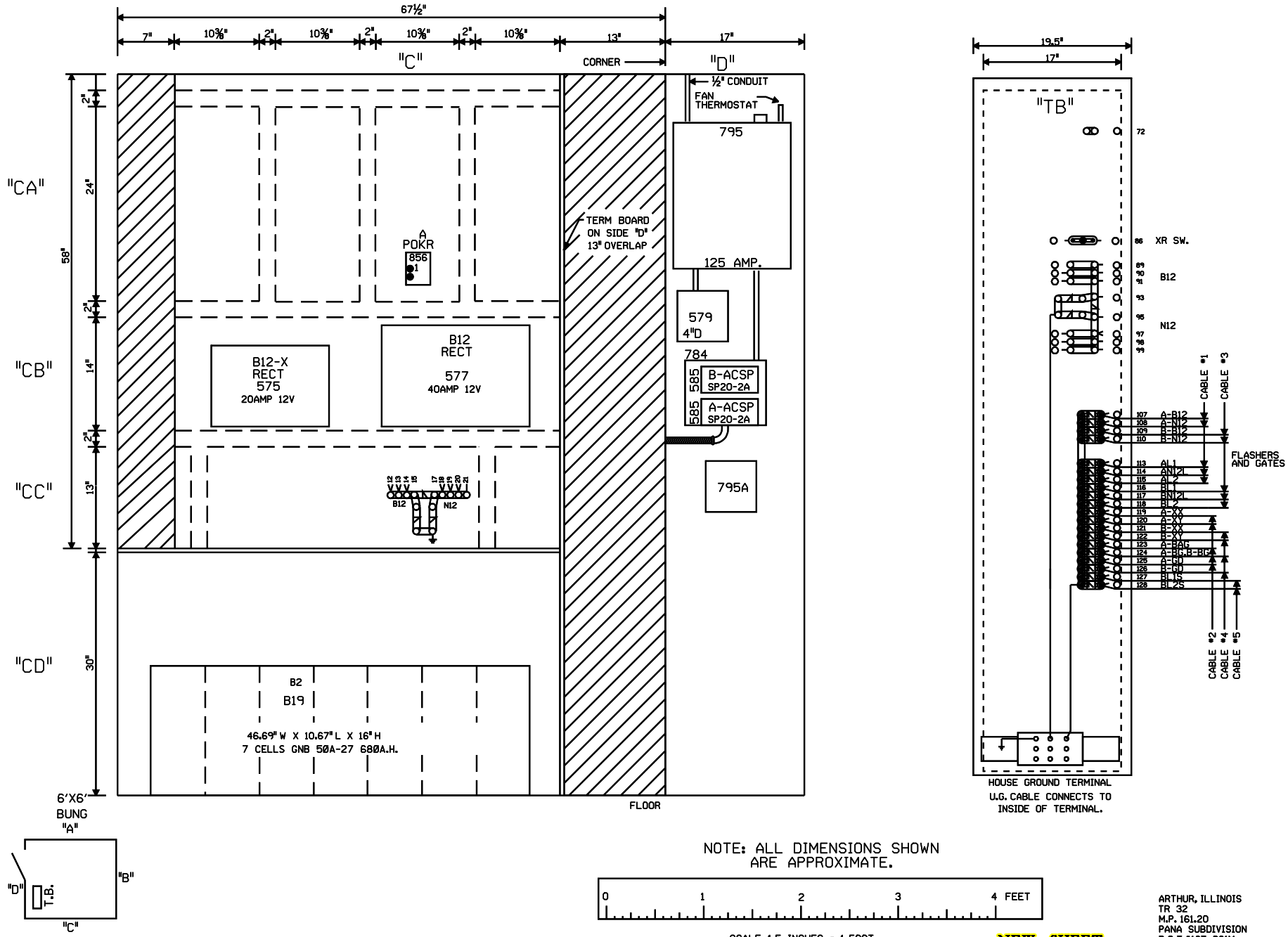

NOTE: ALL DIMENSIONS SHOWN ARE APPROXIMATE.

0 1 2 3 4 FEET

SCALE: 1.5 INCHES = 1 FOOT

NEW SHEET

ARTHUR, ILLINOIS
TR 32
M.P. 161.20
PANA SUBDIVISION
D.O.T.#167 031M

03-07-08 INSTALL FLASHERS AND GATES WITH CWT AT M.P. 161.20 AFE 87084 JJL SSC/JJF	MODIFICATION LEVEL		UNION PACIFIC SIGNAL DESIGN	DES: SSC	UNION PACIFIC RAILROAD	DATE 03-07-08
	Q.A. LAST LEVEL CHECKED	DQ		DIG: SSC	VILLA GROVE, ILLINOIS	SHEET 8
	LAST LEVEL MOD THIS TYPICAL	DQ		CHK: JJL	TO LENOX, ILLINOIS	DWG 161.20
	LAST LEVEL BY DESIGNER	DQ		A.F.E. 87084	C.T.C. CIRCUITS	S-301
	CHANGED FROM TYPICAL?	Y		ID= 030116120.8X	Office of Sr.AVP Engineering - Signal/TCO Omaha, Nebraska	
	REV 02.01.08 4K GFC.9					