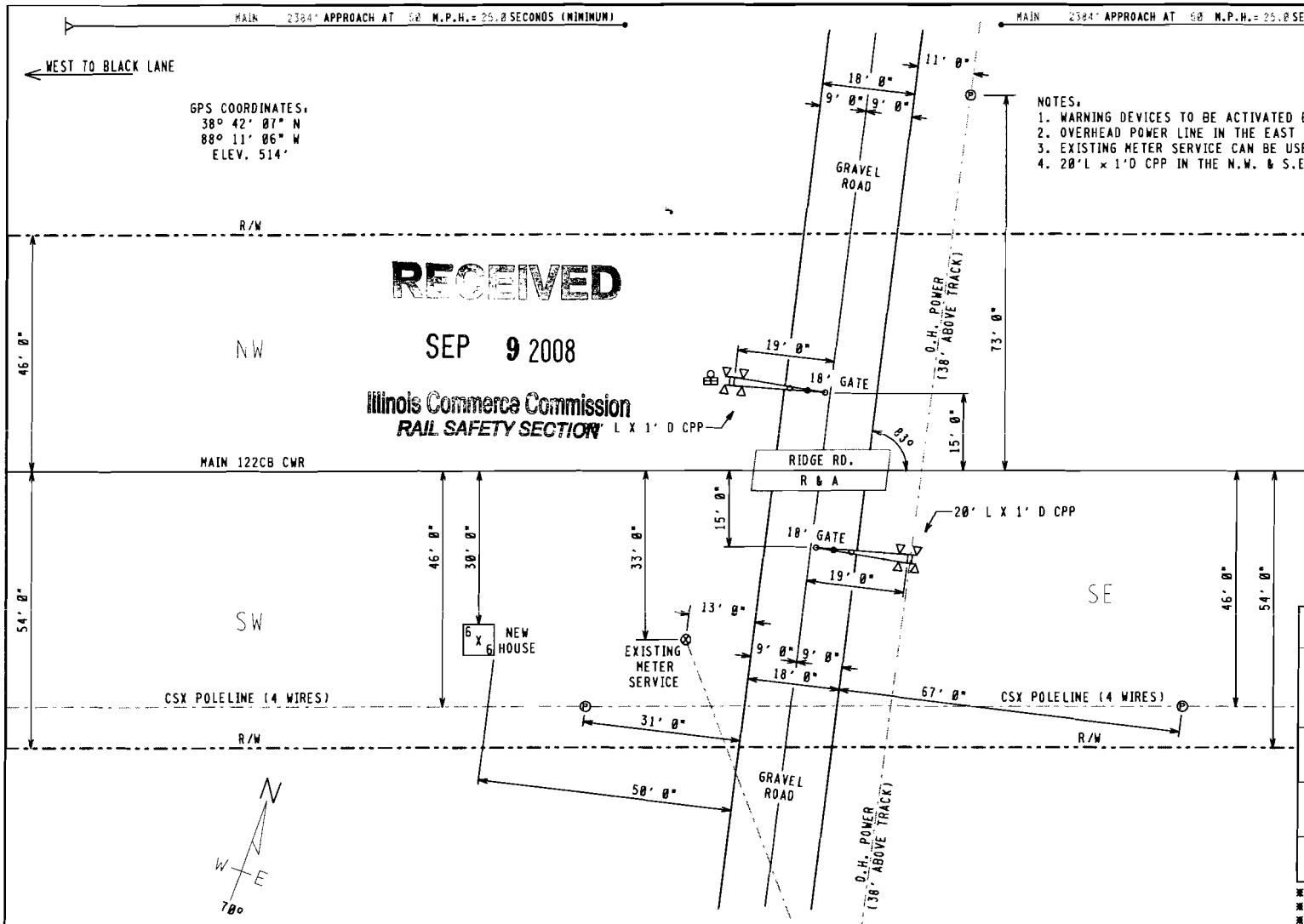

NOTES:
1. WARNING DEVICES TO BE ACTIVATED BY SAF 4000 GCP.
2. OVERHEAD POWER LINE IN THE EAST IS 38' ABOVE THE TRACK.
3. EXISTING METER SERVICE CAN BE USED AND UPGRADED FOR CROSSING POWER SOURCE.
4. 20'L x 1'D CPP IN THE N.W. & S.E. QUADRANTS WILL BE INSTALLED BY OTHERS.

RECEIVED
SEP 9 2008
Illinois Commerce Commission
RAIL SAFETY SECTION

APPROACH LENGTHS TABLE DC, AFO, TYPE C, MOTION, CWT, OR OTHER	WESTBOUND TRACK 1 CWT	EASTBOUND TRACK 1 CWT
STANDARD MINIMUM WARNING TIME	20	20
ROADWAY GATE TIME	5	5
CLEARANCE TIME	0	0
DOT TRAFFIC LIGHT SIMULTANEOUS PREEMPT TIME *	0	0
DESIGNED WARNING TIME FOR TRAINS AT TIME TABLE SPEED	25	25
DOT TRAFFIC LIGHT ADVANCE PREEMPT TIME *	0	0
CONTROL EQUIPMENT DECISION TIME	5	5
DESIGNED DETECTION TIME FOR TRAINS AT TIME TABLE SPEED	30	30
TIME TABLE MAXIMUM TRAIN SPEED IN MILES PER HOUR	50	50
BUFFER SPEED IN MILES PER HOUR	5	5
TOTAL WARNING SYSTEM DESIGN SPEED	55	55
APPROACH DISTANCE TO ISLAND EDGE IN FEET	2304	2304
HALF WIDTH OF ISLAND IN FEET	60	60
APPROXIMATE MILE POSTS FOR APPROACH CIRCUIT	226.33	225.59

*AUTHORIZING AGENCY: NONE
*DATE OF REQUIREMENT: NONE
*AMOUNT OF TIME (SEC.): NONE

FILE NAME: BC22588.H01	REVISION DATES	PRODUCED FOR:	PRODUCED BY:	LEGEND	GUARD RAIL	METER SERVICE ⊗	STREET NAME: RIDGE RD.	
DATE DRAWN: 02-04-2008	02-20-08 DCK	CSX TRANSPORTATION	SAFETRAN systems	CSX ROW	O.H. POWER	POLE Ⓟ	CITY & STATE: NOBLE, IL	
DRAWN BY: ROBERT BARTON	- -	RAIL TRANSPORT GROUP ENGINEERING	7775 BAYMEADOWS WAY	R/R POLELINE	FENCE	FIRE PLUG Ⓕ	PROJECT #: IL2008001	PROPOSED CROSSING LAYOUT
CHECKED BY: ERNESTO PROSPERO	- -	COMMUNICATIONS AND SIGNALS	SUITE 250	GAS	WATER	SEWER CAP Ⓢ	OP #: IL0228	
SSC #: JXXD00447	- -		JACKSONVILLE, FL 32256	FIBER OPTIC	SEWER	GAS VENT Ⓥ	DOT: 152877T	SCALE = 20:1

INDEX

CONTENTS

SH. NO.		REVISION NO. 1	2	3	4	5	6	7	8	9
I01	INDEX AND REVISIONS	/								
S01	TRACK AND SIGNAL PLAN	/								
P01	MINIMUM PROGRAM STEPS REPORT CWE-88	/								
E01	POWER DISTRIBUTION	/								
C01	DETECTION DEVICE CONSIST CWE-88	/								
C02	DETECTION CIRCUITRY CWE-88	/								
C03	DETECTION CIRCUITRY CWE-88	/								
C04	CROSSING WARNING DEVICE GATE CIRCUITRY	/								
C05	CROSSING WARNING DEVICE LIGHT CIRCUITRY	/								
C06	CROSSING WARNING DEVICE CIRCUITRY	/								
C07	SEAR II: CONFIGURATION & FUNCTIONS	/								

/ = PLANS SENT TO FIELD (DISTRIBUTED)

X = PLANS AS-IN-SERVICED (UP TO DATE)

NEW WORK

SAFETRAN systems

PROJECT #. IL2000001

DES/CHKD BY. DCK/SWS

DATE. 02-20-00

= NOTE

4K.I01
REV. 12-19-06

DESIGN DATE	REV. NO.
02-20-00	1

REVISIONS

REV. NO.	PROJECT NO.	DESIGN DATE	IN SERVICE DATE	REVISION DATE
1	IL2000001	02-20-00		

TO BE COMPLETED ON A.I.S.

CSX TRANSPORTATION

RAIL TRANSPORT GROUP ENGINEERING
COMMUNICATIONS AND SIGNALS

EE WASHINGTON TO BLACK LANE

BRIDGE NO. (1520777)

INDEX AND REVISIONS

NOBLE, IL M.P. BC-225.88

DESIGNED	DIGITIZED	CHECKED	DATE
SAF/DCK	SAF/DCK	SAF/SWS	02-20-00

DRAWING	SHEET NO	FILE	SHEET
-----	-----	BC22500	I01

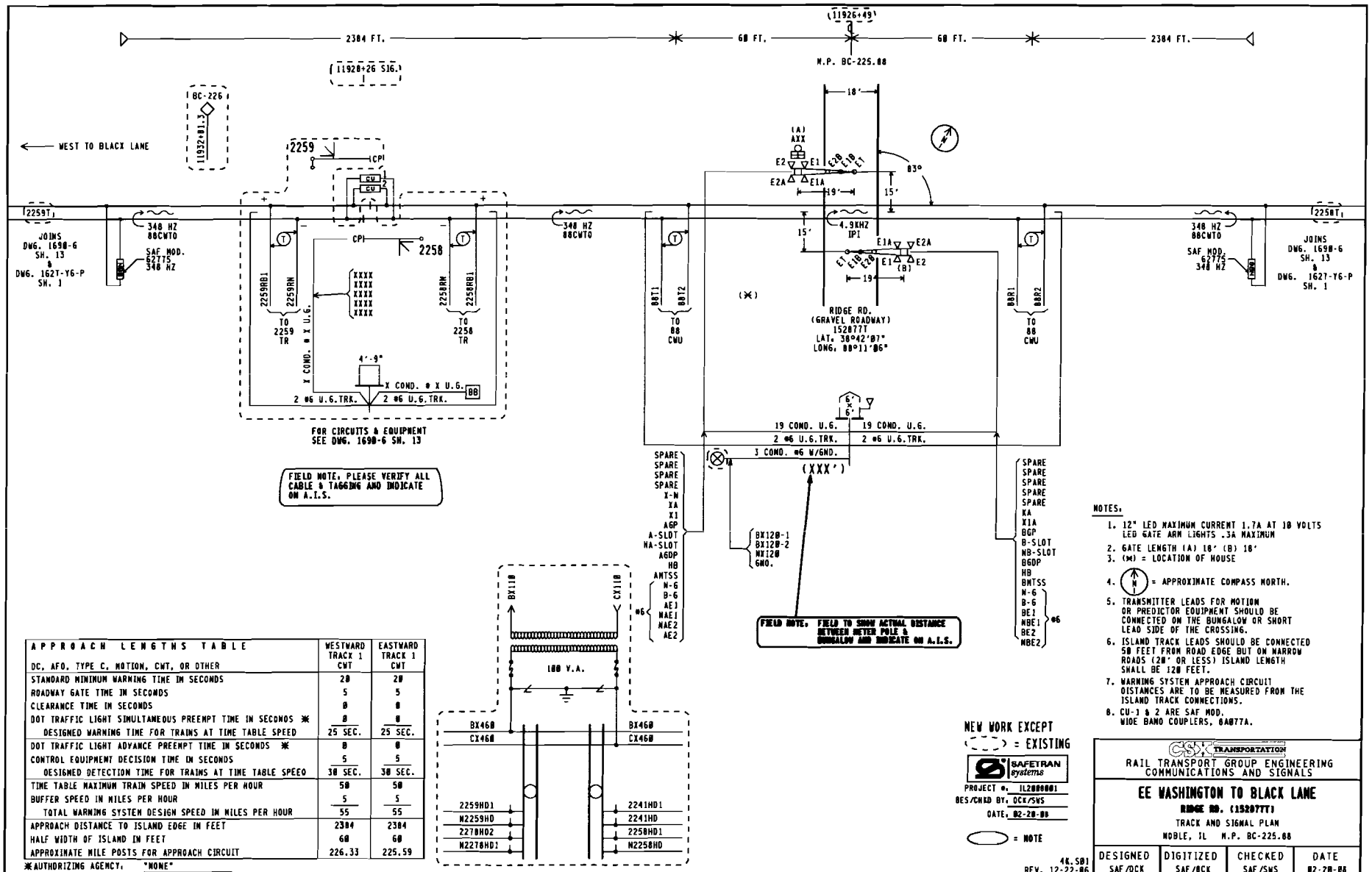

APPROACH LENGTHS TABLE DC, AFO, TYPE C, MOTION, CWT, OR OTHER	WESTWARD TRACK 1 CWT	EASTWARD TRACK 1 CWT
STANDARD MINIMUM WARNING TIME IN SECONDS	20	20
ROADWAY GATE TIME IN SECONDS	5	5
CLEARANCE TIME IN SECONDS	0	0
DOT TRAFFIC LIGHT SIMULTANEOUS PREEMPT TIME IN SECONDS *	0	0
DESIGNED WARNING TIME FOR TRAINS AT TIME TABLE SPEED	25 SEC.	25 SEC.
DOT TRAFFIC LIGHT ADVANCE PREEMPT TIME IN SECONDS *	0	0
CONTROL EQUIPMENT DECISION TIME IN SECONDS	5	5
DESIGNED DETECTION TIME FOR TRAINS AT TIME TABLE SPEED	30 SEC.	30 SEC.
TIME TABLE MAXIMUM TRAIN SPEED IN MILES PER HOUR	50	50
BUFFER SPEED IN MILES PER HOUR	5	5
TOTAL WARNING SYSTEM DESIGN SPEED IN MILES PER HOUR	55	55
APPROACH DISTANCE TO ISLAND EDGE IN FEET	2384	2384
HALF WIDTH OF ISLAND IN FEET	60	60
APPROXIMATE MILE POSTS FOR APPROACH CIRCUIT	226.33	225.59

*AUTHORIZING AGENCY, "NONE"
*DATE OF REQUIREMENT, "NONE"
*AMOUNT OF TIME (SEC.), "NONE"

NOTES:

1. 12" LED MAXIMUM CURRENT 1.7A AT 10 VOLTS LED GATE ARM LIGHTS .3A MAXIMUM
2. GATE LENGTH (A) 18' (B) 18'
3. (*) = LOCATION OF HOUSE
4. (N) = APPROXIMATE COMPASS NORTH.
5. TRANSMITTER LEADS FOR MOTION OR PREDICTOR EQUIPMENT SHOULD BE CONNECTED ON THE BUNGALOW OR SHORT LEAD SIDE OF THE CROSSING.
6. ISLAND TRACK LEADS SHOULD BE CONNECTED 50 FEET FROM ROAD EDGE BUT ON NARROW ROADS (20' OR LESS) ISLAND LENGTH SHALL BE 120 FEET.
7. WARNING SYSTEM APPROACH CIRCUIT DISTANCES ARE TO BE MEASURED FROM THE ISLAND TRACK CONNECTIONS.
8. CU-1 & 2 ARE SAF MOD. WIDE BAND COUPLERS, 8A077A.

NEW WORK EXCEPT
(- - -) = EXISTING
(———) = NOTE

SAFETRAN systems

PROJECT #: IL200001
DES/CHKD BY: OCK/SWS
DATE: 02-20-00

4K.S01
REV. 12-22-06

CSX TRANSPORTATION
RAIL TRANSPORT GROUP ENGINEERING
COMMUNICATIONS AND SIGNALS

EE WASHINGTON TO BLACK LANE

RIDGE RD. (152077T)

TRACK AND SIGNAL PLAN

NOBLE, IL M.P. BC-225.88

DESIGNED	DIGITIZED	CHECKED	DATE
SAF/OCK	SAF/OCK	SAF/SWS	02-20-00

DESIGN DATE	REV. NO.	DRAWING	SHEET NO	FILE	SHEET
02-20-00	1	-----	-----	BC22500	S01

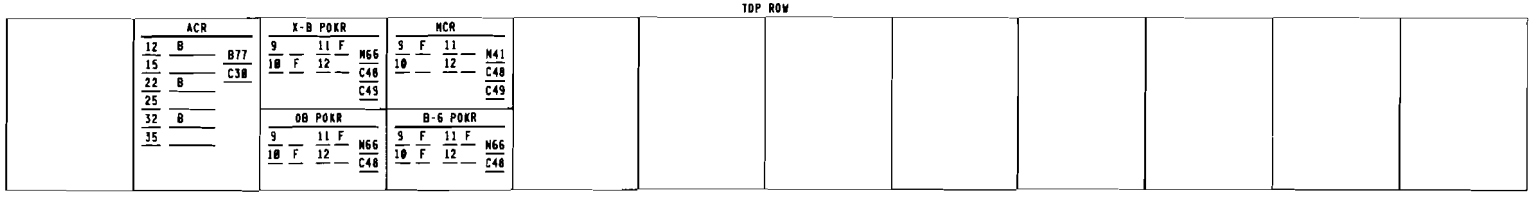

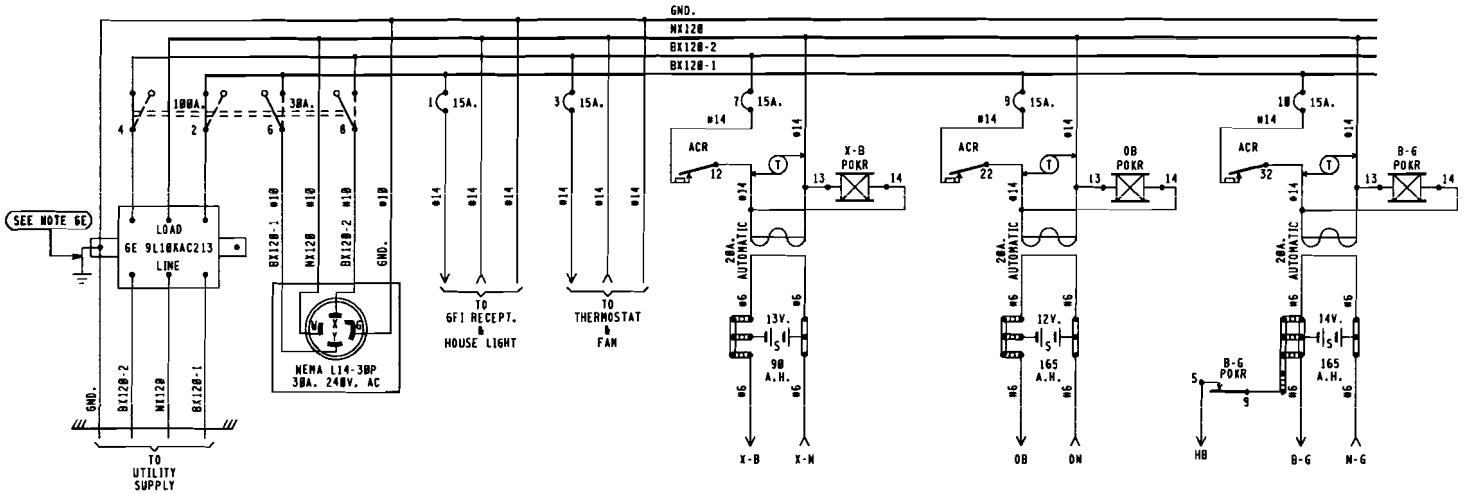

BX120-1	BX120-2
15.0 AMPS	8.0 AMPS

MAXIMUM LOAD
CALCULATED PER SS360

NOTES.

1 - REFERENCES ARE PER SCMS-13.
2 - ARRESTERS ARE PER SS302.
3 - SHELF RELAY PLACEMENT ON CONSIST CHART HAS NO SIGNIFICANCE.
4 - PLUG-IN RELAYS ARE VIEWED FROM THE FRONT OF RACK.
5 - BATTERY A.H. CAPACITY SHOWN IS THE MINIMUM REQUIREMENT.
6 - WIRING
  A - FEED TO ALL BUSSES, LIGHT CIRCUITS, MOTOR CIRCUITS TO BE #10 FLEX.
  B - 120-VOLT FEED FROM ENTRANCE TO POWER BUSS TO BE #10 FLEX.
  C - ALL TRACK WIRES TO BE #10 FLEX.
  D - ALL OTHERS TO BE #16 FLEX UNLESS NOTED.
  E - GROUND WIRE NOT NECESSARY WHEN GE ARRESTER IS MOUNTED ON GROUND PLANE OR METAL ENCLOSURE AFFIXED DIRECTLY TO BUNGALOW METALLIC STRUCTURAL MEMBER.
T - CIRCUIT INTERRUPTERS 2 & 4 ARE MECHANICALLT INTERLOCKED WTTH CIRCUIT INTERRUPTERS 6 & 8.

6'X 6' RELAY HOUSE W/FARADAY SHIELD

NEW WORK

SAFETRAN systems

PROJECT #. IL2000001
DES/CHKD BY. DCK/SWS
DATE. 02-20-00

= NOTE

4000GCP.E01
REV. 04-14-07

CSX TRANSPORTATION
RAIL TRANSPORT GROUP ENGINEERING
COMMUNICATIONS AND SIGNALS

EE WASHINGTON TO BLACK LANE
RIDGE RD. (1520777)
POWER DISTRIBUTION
NOBLE, IL M.P. BC-225.88

DESIGNED	DIGITIZED	CHECKED	DATE
SAF/DCK	SAF/DCK	SAF/SWS	02-20-00

DESIGN DATE	REV. NO.	DRAWING	SHEET NO	FILE	SHEET
02-20-00	1	-----	-----	BC22500	E01

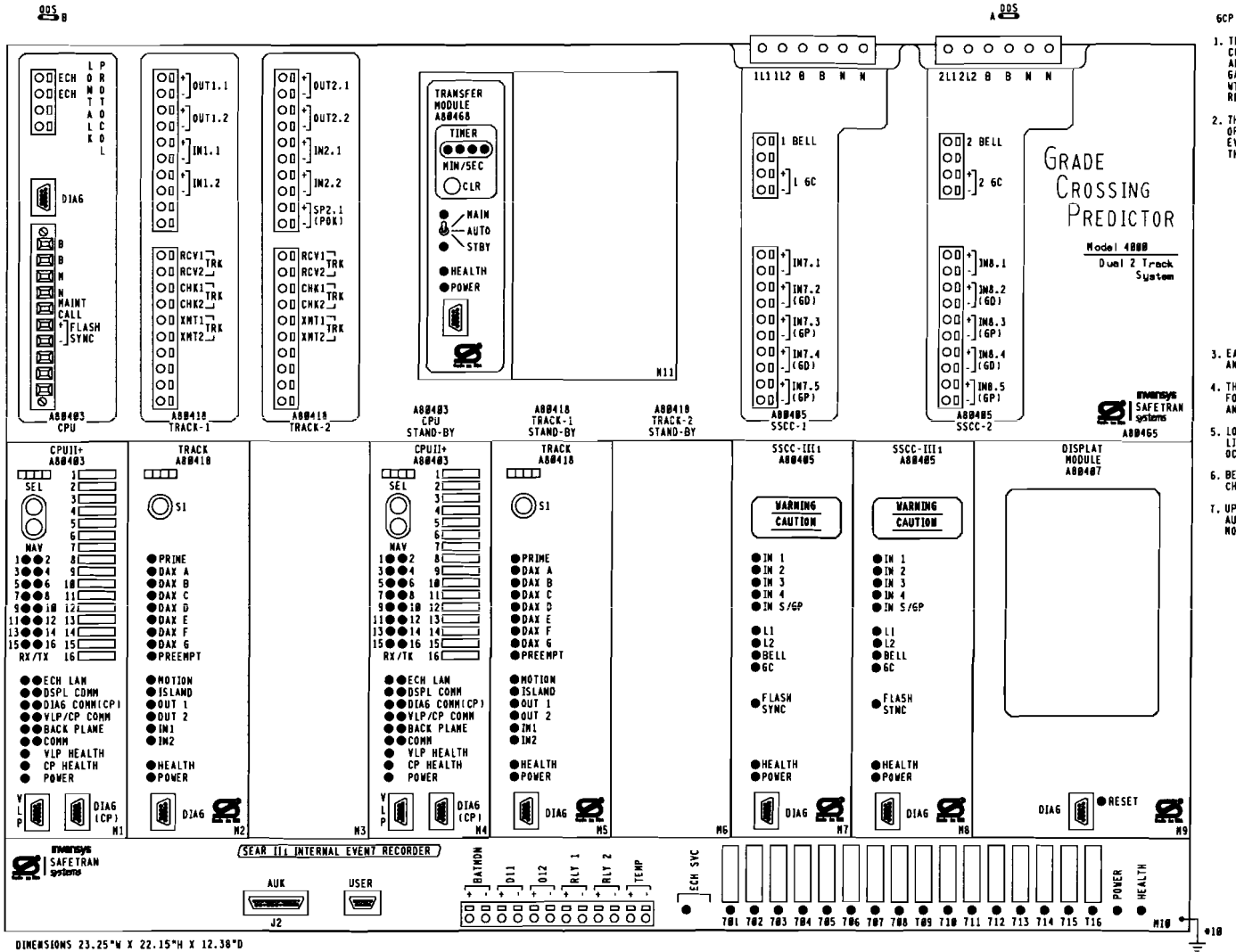

GCP 4000 APPLICATION NOTES:

1. THE GRADE CROSSING PREDICTOR (GCP) IS A MODULAR MICROPROCESSOR CONTROLLED SYSTEM THAT IS DEPLOYED TO CONTINUALLY MONITOR THE APPROACHES TO RAILROAD GRADE CROSSINGS AND TO CONTROL THE LAMPS, GATES AND BELLS ASSOCIATED WITH THOSE CROSSINGS. WHEN EQUIPPED WITH THE SEAR II: MODULE THE GCP 4000 WILL RECORD EVENTS AND REPORT ALARMS WHEN CONNECTED TO AN OFFICE SYSTEM.

2. THE GCP 4000 GCP (A80465) IS A TWO TRACK REDUNDANT UNIT CAPABLE OF DRIVING 4 INDEPENDENT FLASHER AND GATE SIGNALS AND RECORDING EVENTS AND REPORTING ALARMS. THE STANDARD A80465 INCLUDES THE FOLLOWING MODULES.

SLOT	MODULE	FUNCTION	PART NO.
M1	CPU-II+	MAIN	A80403
M2	TRACK-1	MAIN	A80418
M3	PANEL	NONE	D39325
M4	CPU-II+	STANDBY	A80403
M5	TRACK-1	STANDBY	A80418
M6	PANEL	NONE	D39325
M7	SSCC-III:	A SIGNAL	A80405
M8	SSCC-III:	B SIGNAL	A80405
M9	DISPLAY MODULE		A80407
TOP CENTER	TRANSFER UNIT		A80468
LOWER BAT	SEAR II:	RECORDER	A80410
OPTIONAL MODULES:			A80413
RIO MODULE			

3. EACH TRACK MODULE HAS TWO PROGRAMMABLE INPUTS AND TWO PROGRAMMABLE OUTPUTS.

4. THE SEAR II: INTERNAL EVENT RECORDER HAS INPUTS FOR ONE BATTERY MONITOR, TWO NON-VITAL INPUTS AND TWO PROGRAMMABLE RELAY DRIVES (HEEL/FRONT).

5. LOCATED ON THE FRONT OF EACH MODULE THERE ARE LED LIGHTS TO INDICATE THE ACTIVITY OF CERTAIN FUNCTIONS OCCURRING INSIDE THE GCP.

6. BETWEEN SLOT 1 & 2 THERE IS A CHASSIS INDENTIFICATION CHIP (CIC) SOCKET AND AN ECD CONNECTOR (DB-25 FEMALE).

7. UPON THE FAILURE OF A MODULE IN SLOTS M1-M3 THE AUTOMATIC TRANSFER UNIT SWITCHES TO THE STANDBY MODULES IN SLOTS M4-M6.

NEW WORK

SAFETRAN systems

PROJECT #: IL2000001
DES/CHKD BY: DCK/SWS
DATE: 02-20-00

CSX TRANSPORTATION
RAIL TRANSPORT GROUP ENGINEERING
COMMUNICATIONS AND SIGNALS

EE WASHINGTON TO BLACK LANE

RIDGE RD. (15207TT)

DETECTION DEVICE CONSIST CWE-80
NOBLE, IL M.P. BC-225.80

4K-CHASSIS.DGN
REV. 05-01-07

DESIGNED	DIGITIZED	CHECKED	DATE
SAF/DCK	SAF/DCK	SAF/SWS	02-20-00

DESIGN DATE	REV. NO.	DRAWING	SHEET NO	FILE	SHEET
02-20-00	1	-----	-----	BC22500	C01

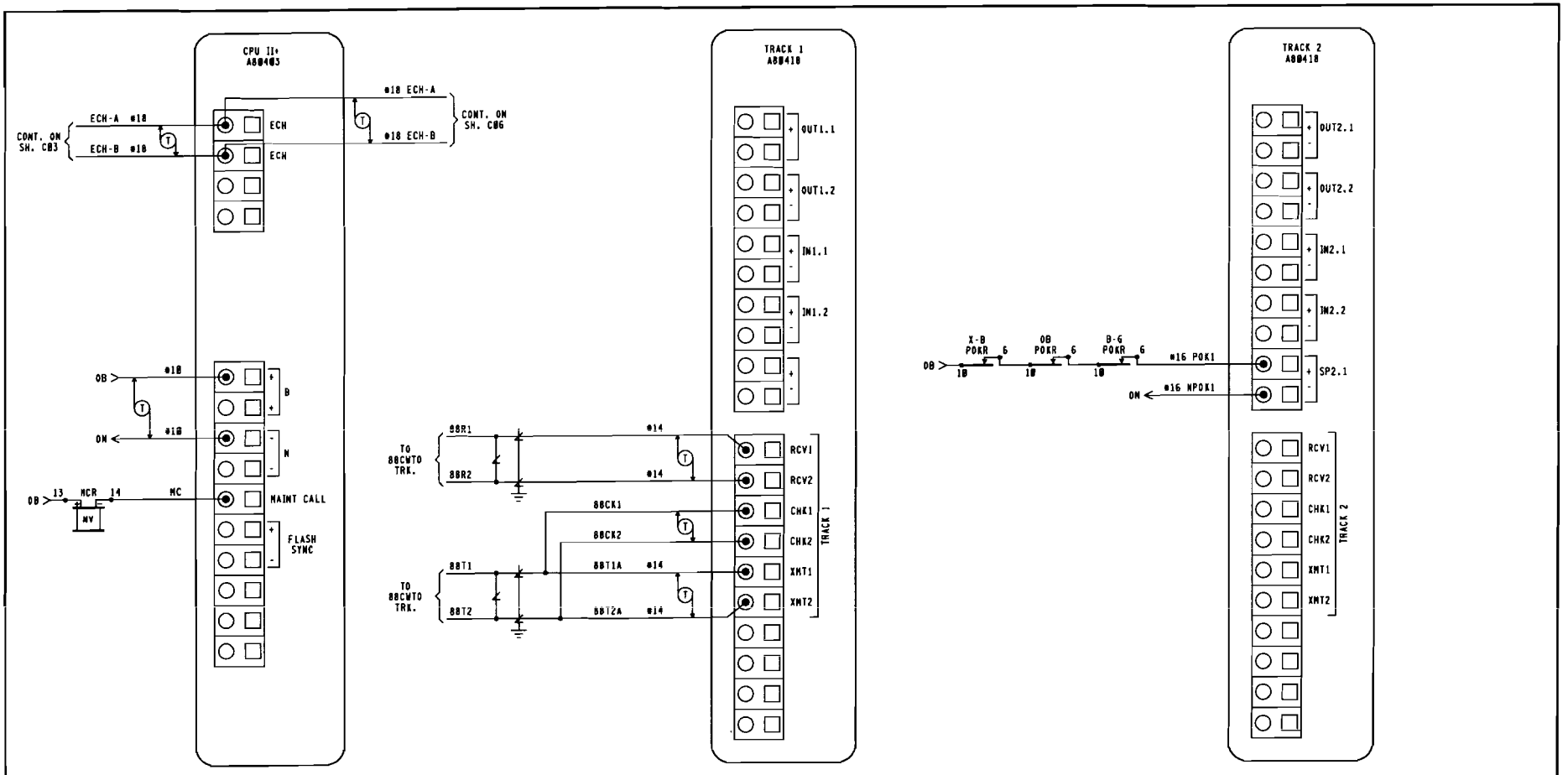

NOTE:

ECHELON CONNECTIONS NOT TO EXCEED 53' IN LENGTH AND TOTAL LENGTH COMBINED NOT TO EXCEED 430' WITH A MAXIMUM OF 8 NODES. RECOMMEND USE BELDEN WIRE CABLE #8461 OR EQUIVALENT.

NEW WORK

SAFETRAN systems

PROJECT #. IL2086001
DES/CHKD BY. DCK/SWS
DATE. 02-20-00

CSX TRANSPORTATION
RAIL TRANSPORT GROUP ENGINEERING
COMMUNICATIONS AND SIGNALS

EE WASHINGTON TO BLACK LANE
RIDGE RD. (1520TTT)
DETECTION CIRCUITRY CWE-88
NOBLE, IL M.P. BC-225.88

4K-TERMINALS.DGN
REV. 12-22-06

DESIGNED	DIGITIZED	CHECKED	DATE
SAF/DCK	SAF/DCK	SAF/SWS	02-20-00

DESIGN DATE	REV. NO.	DRAWING	SHEET NO	FILE	SHEET
02-20-00	1	-----	-----	BC22580	C02

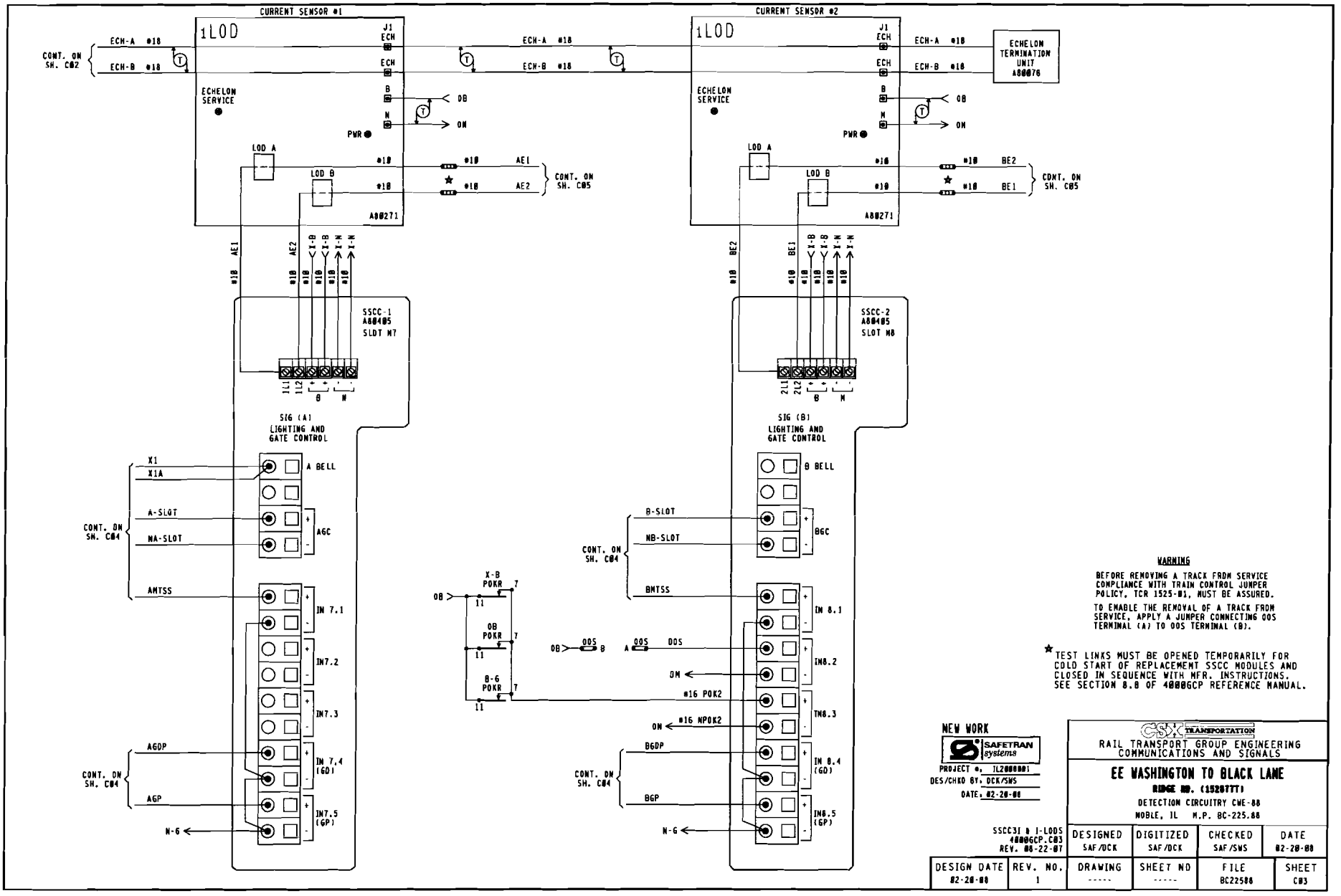

WARNING

BEFORE REMOVING A TRACK FROM SERVICE COMPLIANCE WITH TRAIN CONTROL JUMPER POLICY, TCR 1525-01, MUST BE ASSURED.

TO ENABLE THE REMOVAL OF A TRACK FROM SERVICE, APPLY A JUMPER CONNECTING OOS TERMINAL (A) TO OOS TERMINAL (B).

★ TEST LINKS MUST BE OPENED TEMPORARILY FOR COLD START OF REPLACEMENT SSCC MODULES AND CLOSED IN SEQUENCE WITH MFR. INSTRUCTIONS. SEE SECTION 8.8 OF 4000GCP REFERENCE MANUAL.

NEW WORK

SAFETRAN systems

PROJECT #: IL2000001
DES/CHKD BY: DCK/SWS
DATE: 02-20-00

CSX TRANSPORTATION

RAIL TRANSPORT GROUP ENGINEERING
COMMUNICATIONS AND SIGNALS

EE WASHINGTON TO BLACK LAKE

RIDGE NO. (1520TTT)

DETECTION CIRCUITRY CWE-88

NOBLE, IL M.P. BC-225.88

SSCC3I & I-LODS
4000GCP.C03
REV. 00-22-07

DESIGNED	DIGITIZED	CHECKED	DATE
SAF/DCK	SAF/DCK	SAF/SWS	02-20-00

DESIGN DATE	REV. NO.	DRAWING	SHEET NO	FILE	SHEET
02-20-00	1	-----	-----	BC22500	C03

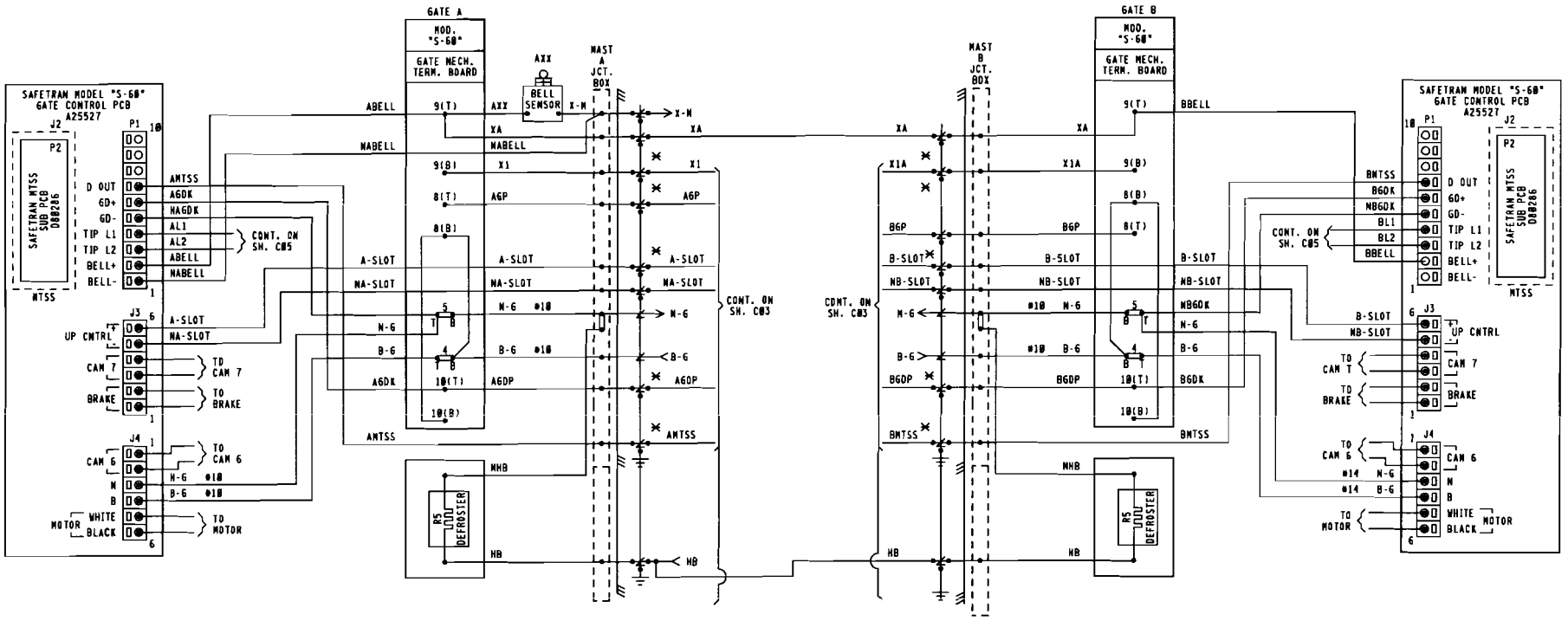

NOTES:
1. ✕ = TEST LINKS MUST BE OPEN TEMPORARILY FOR COLD START OF REPLACEMENT SSCC MODULES AND AND CLOSED IN SEQUENCE WITH MFR. INSTRUCTIONS. SEE SECTION 8.0 OF 4000GCP REFERENCE MANUAL.
2. = TERMINAL IN JCT. BOX BASE
3. ALL WIRING #16 UNLESS NOTED OTHERWISE.

NEW WORK

SAFETRAN systems

PROJECT #: IL2000001
DES/CHKD BY: OCK/SWS
DATE: 02-20-00

CSX TRANSPORTATION
RAIL TRANSPORT GROUP ENGINEERING
COMMUNICATIONS AND SIGNALS

EE WASHINGTON TO BLACK LANE
RIDGE RD. (152077T)
CROSSING WARNING DEVICE GATE CIRCUITRY
NOBLE, IL M.P. BC-225.00

S60 GATE WIRING.C04A
REV 09-05-07

DESIGNED	DIGITIZED	CHECKED	DATE
SAF/DCK	SAF/DCK	SAF/SWS	02-20-00

DESIGN DATE	REV. NO.	DRAWING	SHEET NO	FILE	SHEET
02-20-00	1	-----	-----	BC22500	C04

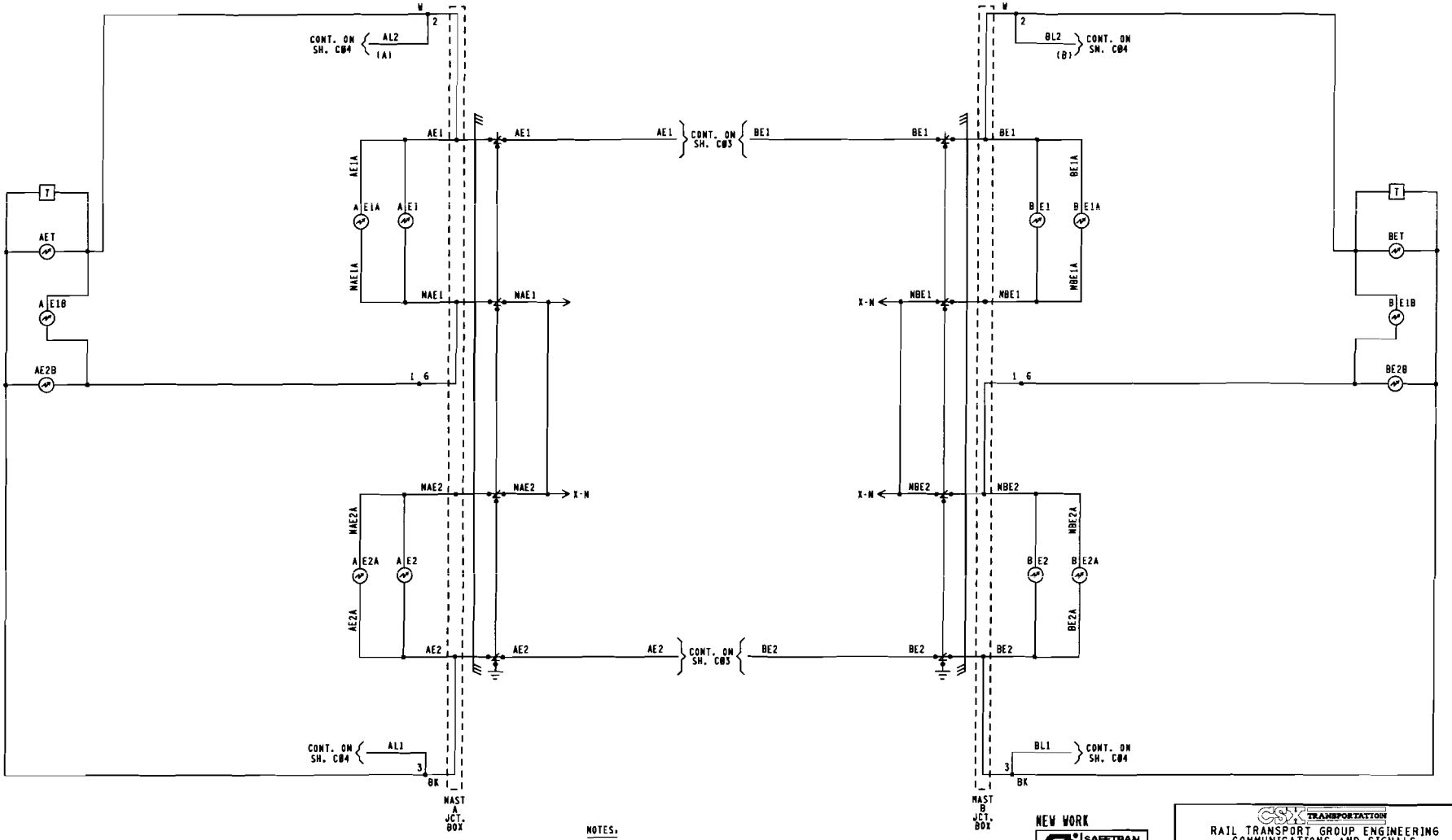

NOTES:

1. [ ] = TERMINAL IN JUNCTION BOX
2. WHEN 7 OR MORE LIGHTS ON A SINGLE STRUCTURE REFER TO SS302 FOR REQUIRED ARRESTERING
3. FEEDS TO ALL BUSSES AND LIGHT CIRCUITS ARE #10 FLEX
4. UNLESS NOTED ALL OTHER WIRING #16
5. CABLING SPECIFICATIONS SHOWN ON SH. S01
6. [T] = TIP SENSOR

NEW WORK

SAFETRAN systems

PROJECT #: IL2088001
DES/CHKD BY: DCK/SWS
DATE: 02-20-08

4K-LAMP WIRING.DGN
REV. 05-01-07

CSX TRANSPORTATION

RAIL TRANSPORT GROUP ENGINEERING
COMMUNICATIONS AND SIGNALS

EE WASHINGTON TO BLACK LANE

RIDGE RD. (152817TT)

CROSSING WARNING DEVICE LIGHT CIRCUITRY

NOBLE, IL M.P. BC-225.88

DESIGNED	DIGITIZED	CHECKED	DATE
SAF/DCK	SAF/DCK	SAF/SWS	02-20-08

DESIGN DATE	REV. NO.	DRAWING	SHEET NO	FILE	SHEET
02-20-08	1	-----	-----	BC22588	C05

WAYSIDE ACCESS GATEWAY CONFIGURATION	
SITE ATCS ADDRESS	T.125.432.026.07.01 T.125.LLL.666.SS.DD
SERIAL INTERFACE	38,400,NONE,8,1/NOFLOW
SERIAL FORMAT	RAW
WAG TEST MODE	DISABLED
ECHELON ADDRESS	01.07
UDP PORTS	5000, 5001, 5002, 5003
ROUTE TABLE EXPIRY	5400 SEC
BROADCAST MEDIUM	IP ETHERNET
TCP PORTS	23, 10023, 6001, 6002
DHCP SERVER	DISABLED
IP ADDRESS	192.168.13.1
TYPE 7 ROUTE LENGTH	12--7RRLLL666SS
IP NETWORK MASK	255.255.255.0
WAG CIRCUIT ID	DISABLE
ROUTING REGION DOMAIN 1	OC6SERVER1.JAX.COM
ATCS SERVER UDP PORT NUMBER	6001
TELNET NUMBERS	WAG 6002, SERIAL 10023
DEFAULT GATEWAY IP	192.168.013.031

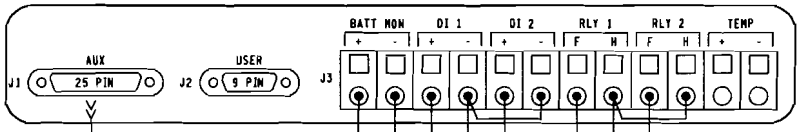

	DEFAULTS AND/OR STYLE	FIELD RECORD
SEAR II: EXECUTIVE PROGRAM	VERSION: 9V725A01	VERSION: _____
APPLICATION PROGRAM (IF LOADED)	VERSION: 9V864A01	VERSION: _____

NOTE TO INSPECTOR: AT IN SERVICE OF SEAR II: OR UPDATE OF ITS INTERNAL EXECUTIVE PROGRAM OR ITS CSXT APPLICATION PROGRAM, THE VERSION NUMBER OF EACH PROGRAM MUST BE INSERTED IN THE BLANK FIELDS.

SITE SET UP PROCEDURE	
FUNCTION	LED DISPLAY
DATE/TIME	XX-XX-XXXX XX:XX:XX
AUTOMACTIC DST ADJUSTMENT	YES
TIME ZONE	EASTERN
SITE NAME	RIDGE RD.
MILEPOST	BC-225.88
DOT NUMBER	152077T
TESTER TYPE	CROSSING
DATE FORMAT	MM-DD-YYYY
TEMP FORMAT	FAHRENHEIT
INDICATE HOLD (SEC)	0
SITE TYPE	COLLECTOR
SITE ATCS ADDRESS	T.125.432.026.99.01 (T.RRR.LLL.666.99.01)
POLL ID	1
OFFICE ADDRESS	2.125.00.0000 (2.RRR.MM.DDDD)
FIELD COMM. DEVICE	VHF COMM. (ECHELON)
MODE	GEM/ATCS
WAMS XID	ENABLED
OFFICE COMM. DEVICE	WAG (ECHELON)
USER PORT BAUD	38,400
USER PORT DATA BITS	8
USER PORT PARITY	NONE
USER PORT STOP BITS	1
USER PORT FLOW CONTROL	NONE
AUX PORT BAUD	38,400
AUX PORT DATA BITS	8
AUX PORT PARITY	NONE
AUX PORT STOP BITS	1
AUX PORT FLOW CONTROL	NONE
COMM PORT BAUD	9600
COMM PORT DATA BITS	8
COMM PORT PARITY	NONE
COMM PORT STOP BITS	1
COMM PORT FLOW CONTROL	NONE

INSPECTOR NOTE.
CURRENT VALUES MAY VARY DEPENDANT ON FIELD CONDITIONS. MARK UP PER ACTUAL READINGS FOR IN-SERVICE REVISION.

LIT BULB COUNT ON EACH CIRCUIT	NO.	TYPE OF BULB	CURRENT READING IN AMP. AT APPROX. 10.0 V ARRAT VOLTAGE
CURRENT SENSOR (1) AE1. LAMP SET UP	4	☐BULBS ■LED	4.0
CURRENT SENSOR (1) AE2. LAMP SET UP	4	☐BULBS ■LED	4.0
CURRENT SENSOR (2) BE1. LAMP SET UP	4	☐BULBS ■LED	4.0
CURRENT SENSOR (2) BE2. LAMP SET UP	4	☐BULBS ■LED	4.0

VHF RADIO CHANNELS			
1	161.130	5	161.550
2	160.710	6	160.785
3	160.560	7	160.785
4	160.860	8	160.785

NOTE 7

MENU → CONFIGURATION	
MODULE TYPE	WAG
MODULE NAME	DEFAULT
WAG ECHELON MODE	7

NOTE:
REFER TO WAG INSTALLATION AND SETUP IN APPENDIX "A" GCP4000 SYTEN CUT OVER, TEST PROCEDURE AND CHECK OFF SHEET.

MEASURE BATTERT VOLTAGE AT INPUT			
BATTERT VOLTAGE	OB	_____	VOLTS
BATTERT VOLTAGE	X-B	_____	VOLTS
BATTERT VOLTAGE	B-G	_____	VOLTS

NOTE 6

EDIT DIGITAL INPUTS	■ NO	☐ YES
EDIT BATTERIES	■ NO	☐ YES
EDIT RELAYS	■ NO	☐ YES
EDIT INDICATOR LEDS	■ NO	☐ YES
EDIT TEST LED'S	■ NO	☐ YES
EDIT ILOD SENSOR	■ NO	☐ YES
EDIT VHF SETTINGS	■ NO	☐ YES

	CONTROL SYSTEM CONFIGURATION MENU QUESTIONS	
	OPTION	SELECTION
	RAILROAD NUMBER	125
	CROSSING CONFIGURATION	NORMAL ■ DUAL CROSSING ☐ SPLIT GATE ☐ EXTERNAL ENTRANCE GATE CONTROLLER(S) ☐
	ENTRANCE GATES*	0 ☐ 1 ☐ 2 ■ 3 ☐ 4 ☐ 5 ☐ 6 ☐ 7 ☐ 8 ☐
	GATE POSITION FAIL*	20 SECS.
NOTE 8	BATTERY BANKS*	1 ☐ 2 ■ 3 ☐
	BATT MON USED*	NO ☐ YES ■
	OB RESOLUTION*	0.2 ■ 0.5 ☐ 1.0 ☐
	X-B RESOLUTION*	0.2 ■ 0.5 ☐ 1.0 ☐ NOT PRESENT ☐
	X-B2 RESOLUTION*	0.2 ☐ 0.5 ☐ 1.0 ☐ NOT PRESENT ■
	BATT MON RESOLUTION*	0.2 ☐ 0.5 ☐ 1.0 ■ NOT PRESENT ☐
	INTERNAL CROSSING CONTROLLERS*	0 ☐ 1 ☐ 2 ■
	EXTERNAL CROSSING CONTROLLERS*	0 ■ 1 ☐ 2 ☐
	VHF COMMUNICATOR*	YES ■ NO ☐
NOTE 1	DTMF ACTVATION*	YES ■ NO ☐
	ACTIVATION CODE	077
	ACTIVATION TIMEOUT	(60 SEC)
	ILOD MODULES*	0 ☐ 1 ☐ 2 ■ 3 ☐ 4 ☐
NOTE 2	ANY LED BULBS USED*	NO ☐ YES ■
	AUTO INSPECTIONS*	YES ■ NO ☐
	BELL SENSOR*	0 ☐ 1 ■ 2 ☐ 3 ☐ 4 ☐
NOTE 3	BELL SENSOR TSS 1*	NO ☐ YES ■
	BELL SENSOR TSS 2*	NO ■ YES ☐
	BELL SENSOR TSS 3*	NO ■ YES ☐
	BELL SENSOR TSS 4*	NO ■ YES ☐
	BELL SENSOR TSS 5*	NO ■ YES ☐
	BELL SENSOR TSS 6*	NO ■ YES ☐
	BELL SENSOR TSS 7*	NO ■ YES ☐
	BELL SENSOR TSS 8*	NO ■ YES ☐
	BELL ON*	GATES LOWERING ■ GATES MOVING ☐ ALWAYS ☐
	GFT'S	YES ■ NO ☐
	BATTERIES ON GFT1	1 ☐ 2 ■
NOTE 4	GATE TIP SENSORS*	YES ■ NO ☐
	RTU	NO ■ YES ☐
NOTE 5	VHF VOICE CHANNEL	1 ☐ 2 ☐ 3 ☐ 4 ☐ 5 ☐ 6 ☐ 7 ☐ 8 ☐
	VHF DATA CHANNEL	1 ☐ 2 ☐ 3 ☐ 4 ☐ 5 ☐ 6 ☐ 7 ☐ 8 ☐
	USE NON-CRITICAL FEATURE*	NO ■ YES ☐
	FULL APPROACH MOVE ALARMS*	ACTIVATE ■ DO NOT ACTIVATE ☐

NOTES.

1. OPTION AVAILABLE IF VHF COMMUNICATOR = YES LAST 3 DIGITS OF DOT NUMBER.
2. OPTION AVAILABLE IF ILODS.
3. OPTION AVAILABLE IF BELL SENSORS.
4. OPTION AVAILABLE IF GATES.
5. OPTION AVAILABLE IF VHF RADIO.
6. ONLT YES IN SPECIAL CIRCUMSTANCES.
7. SELECT "MENU" THEN "CONFIGURATION" FROM SEAR II INTERFACE KEYPAD TO ACCESS MODULE CONFIGURATION MENU.
8. BATTERT BANKS* = NUMBER OF BANKS EXCLUDING THE BANK APPLIED TO THE BAT MON SEAR INPUT

NEW WORK

SAFETRAN systems

PROJECT #: (L200000)
DES/CHKD BY: DCK/SWS
DATE: 02-20-00

CSX TRANSPORTATION
RAIL TRANSPORT GROUP ENGINEERING
COMMUNICATIONS AND SIGNALS

EE WASHINGTON TO BLACK LANE
RIDGE RD. (152077T)
SEAR II: CONFIGURATION & FUNCTIONS
NOBLE, IL N.P. BC-225.88

40006CP.C07
REV. 05-01-07

= NOTE

DESIGNED	DIGITIZED	CHECKED	DATE
SAF/DCK	SAF/DCK	SAF/SWS	02-20-00

DESIGN DATE	REV. NO.	DRAWING	SHEET NO	FILE	SHEET
02-20-00	1	-----	-----	BC22588	C07

Minimum Program Steps Report

Location and SIN

DOT Number: 152877T
Milepost Number: BC-225.88
Site Name: RIDGE RD

SIN: 712543202616 *

* Parameter is part of office check number calculation.

MCF and Template Selection

MCF Name: GCP-T6X-01-2.mcf
MCF Revision: 012
MCFCRC: 0DFE7A0C

Template = 1A.6 Trk B1 *

* Parameter is part of office check number calculation.

Minimum Program Steps

TEMPLATE: track 1-B1, Island
Track 1 , GCP Frequency = 348 Hz
Track 1 , Approach Distance = 2384 ft See Plans
Track 1 , Prime Warning Time = 25 sec *
Track 1 , GCP Transmit Level = Medium Set in Field
Track 1 , Isl Frequency = 4.9 kHz

TEMPLATE: SSCC
SSCC-1 Number of GDs = 1 *
SSCC-2 Number of GPs = 1 *
SSCC-2 Number of GDs = 1 *

TEMPLATE: IP assignment SSCC
IN 7.2 = Not Used *
IN 8.2 = Out Of Service IP 1 *
IN 8.4 = GD 2.1 *
IN 8.5 = GP 2.1 *

TEMPLATE: SEAR
SP 3.1 = Not Used *

GCP: track 1
Track 1 , Island Distance = 120 ft *

ADVANCED: out of service
OOS Control = Display+OOS IPs *

ADVANCED: site options
Daylight Savings = On *

SSCC: 1
SSCC-1 Gate Delay = 5 sec *
SSCC 1 , Flash Rate = 55 *
SSCC 1 , Lamp Neutral Test = Off *

SSCC: 2
SSCC-2 Gate Delay = 5 sec *
SSCC 2 , Flash Rate = 55 *
SSCC 2 , Lamp Neutral Test = Off *

SEAR
DI 1 = Gnd Flt Tester 1 *
DI 2 = Gnd Flt Tester 2 *
Rly 1 = Ground Fault Test *
Rly 2 = AC Control *

SEAR: slot 7-8 inputs
IN 7.1 = TSS 1 *
IN 8.1 = TSS 2 *
IN 8.3 = POK 2 *

* Parameter is part of office check number calculation.

Check Numbers

Office Check Number: 39F27977
Config. Check Number: 1C3C27D8
(Based on MCF Revision 012)

Parameters not part of office check number calculation:

Track 1 , GCP Frequency = 348 Hz
Track 1 , Approach Distance = 2384 ft See Plans
Track 1 , GCP Transmit Level = Medium Set in Field
Track 1 , Isl Frequency = 4.9 kHz

NEW WORK
SAFETRAN systems
PROJECT #: IL2000001
DES/CHKD BY: DCK/SWS
DATE: 02-20-00

4K.P01
REV. 11-09-07

CSX TRANSPORTATION
RAIL TRANSPORT GROUP ENGINEERING
COMMUNICATIONS AND SIGNALS

EE WASHINGTON TO BLACK LANE
RIDGE RD. (152877T)
MINIMUM PROGRAM STEPS REPORT CWE-88
NOBLE, IL M.P. BC-225.88

DESIGNED	DIGITIZED	CHECKED	DATE
SAF/DCK	SAF/DCK	SAF/SWS	02-20-00

DESIGN DATE	REV. NO.	DRAWING	SHEET NO	FILE	SHEET
02-20-00	1	-----	-----	BC22588	P01

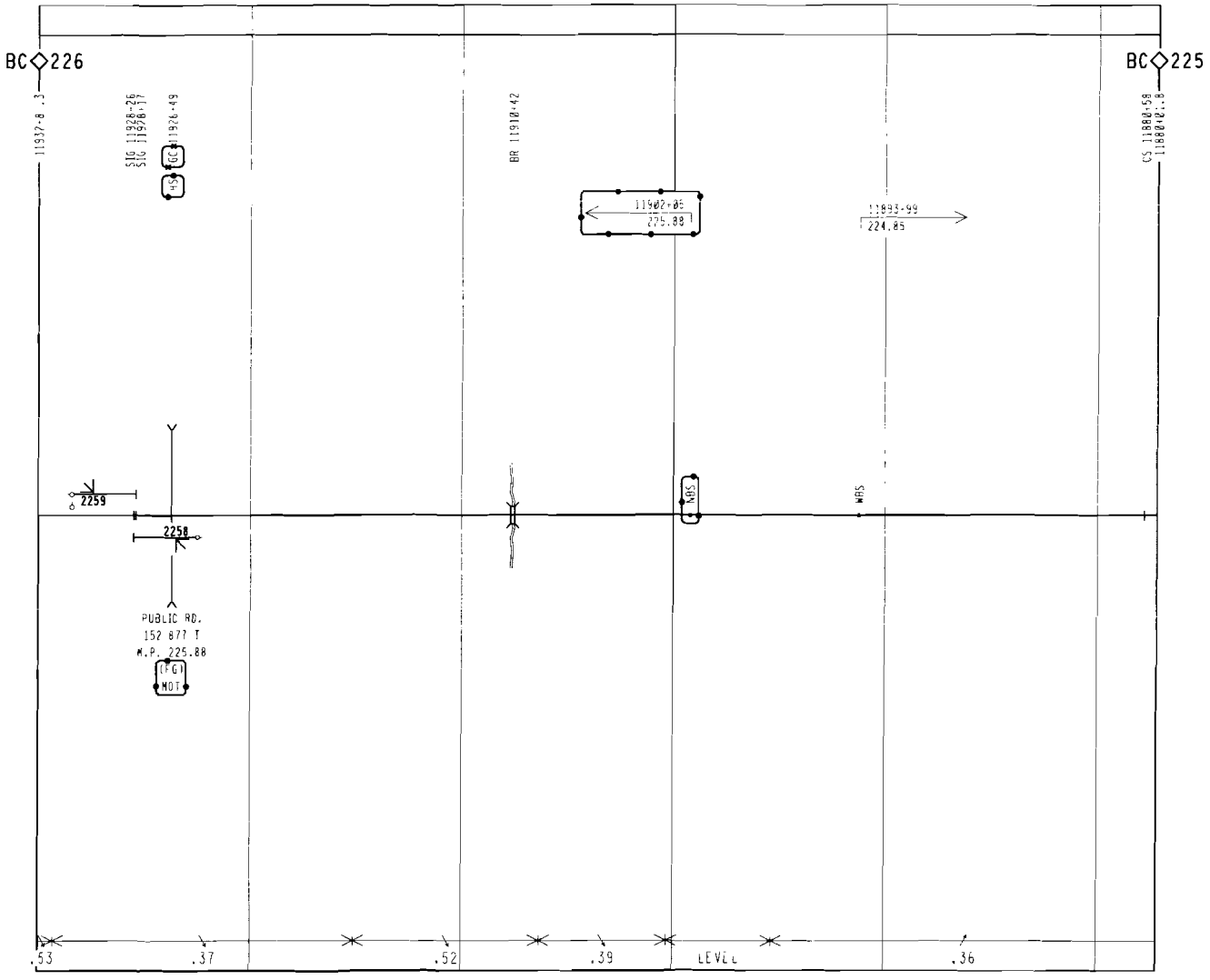

SAFETRAN systems

PROJECT #: IL2000001

DES/CHKD BY: DCK/SWS

DATE: 02-28-00

= IN

= OUT

REVISIONS	HORIZONTAL SCALE: 1 INCH = 500 FEET	M.P. BC-226 TO BC-225 TRACK PLAN EE WASHINGTON RELAY TO O CONNECTION				CSX TRANSPORTATION RAIL TRANSPORT GROUP ENGINEERING COMMUNICATIONS AND SIGNALS			
		DESIGNED SWE	DIGITIZED SWE	CHECKED SWE	DATE 11-15-04	NEXT FILE BC22600	NEXT SH T01	FILE BC22500	SHEET T01

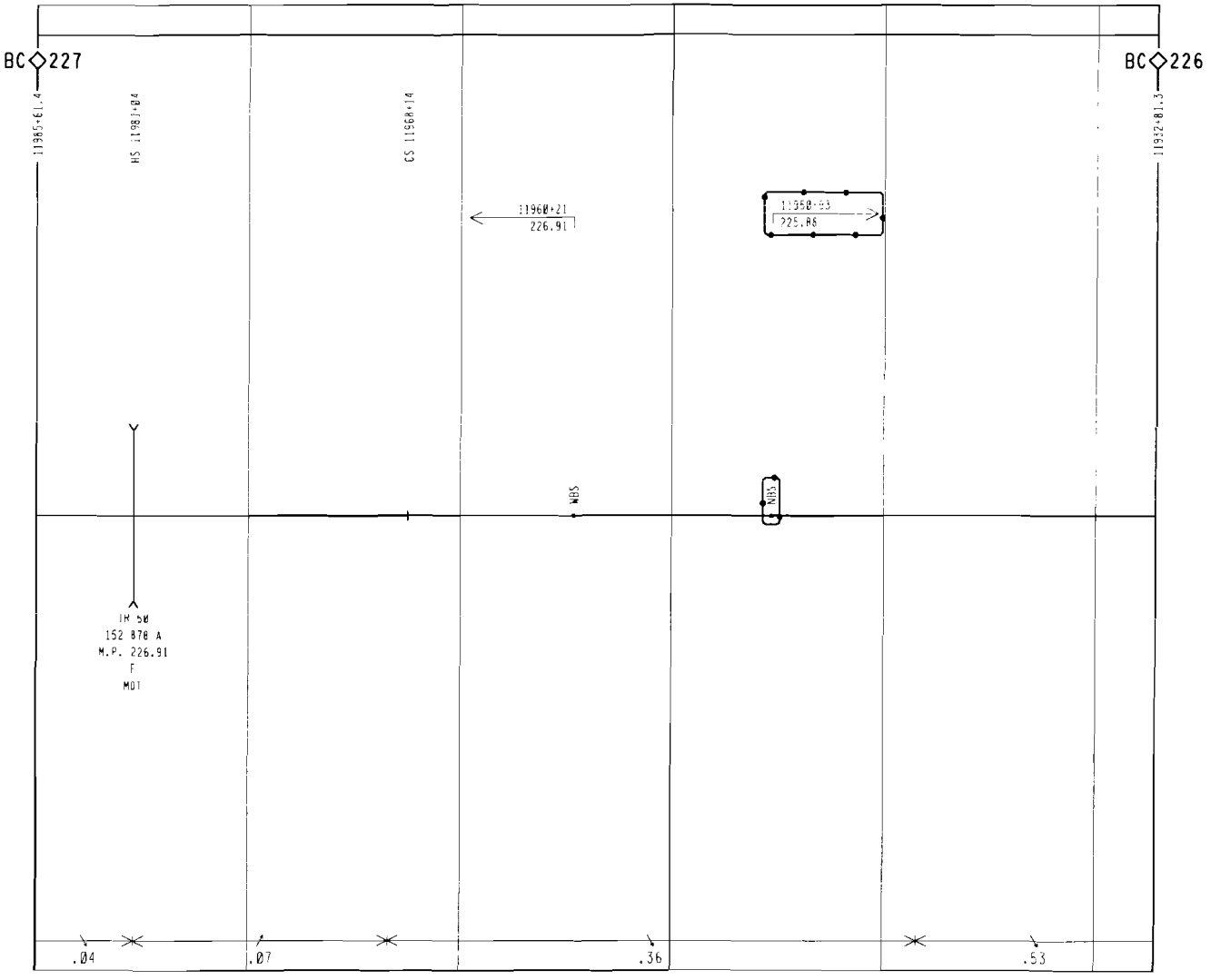

SAFETRAN systems

PROJECT #: EL2000001
DES/CHKD BY: DCK/SWS
DATE: 02-20-00

⊖⊖⊖ = IN

REVISIONS	HORIZONTAL SCALE: 1 INCH = 500 FEET	M.P. BC-227 TO BC-226 TRACK PLAN EE WASHINGTON RELAY TO Q CONNECTION				RAIL TRANSPORT GROUP ENGINEERING COMMUNICATIONS AND SIGNALS			
		DESIGNED SWE	DIGITIZED SWE	CHECKED SWE	DATE 11-15-04	NEXT FILE BC22700	NEXT SH T01	FILE BC22600	SHEET T01