PLAN MUST NOT BE MODIFIED WITHOUT APPROVAL OF SIGNAL ENGINEERING

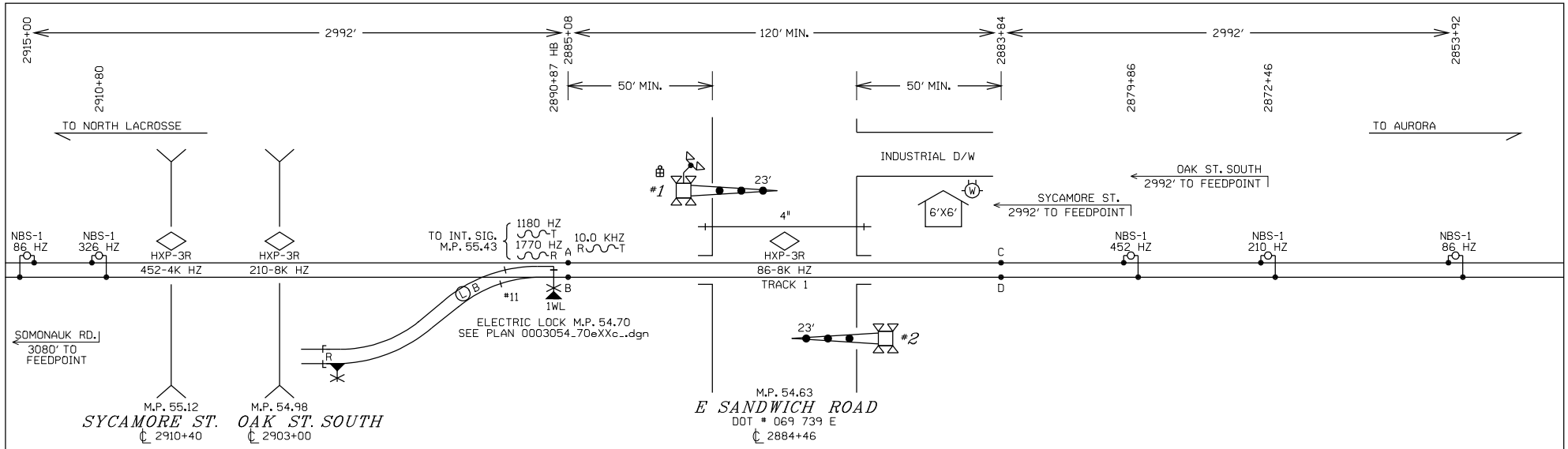

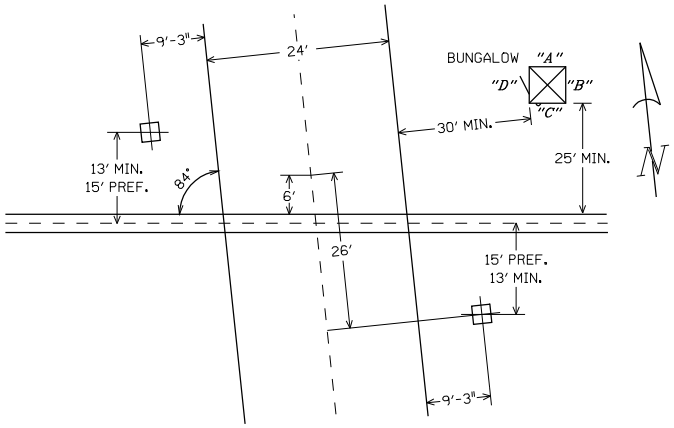

FOUNDATION PLACEMENT SKETCH
NOT TO SCALE

NOTES:

EQUIPMENT IS DESIGNED FOR 20 SECONDS MINIMUM WARNING TIME AT 60 MPH.
APPROACHES WERE LENGTHENED 10 SECONDS FOR SPEED VARIANCE AND BALLAST CHANGES (BT).
APPROACHES WERE LENGTHENED 4 SECONDS FOR EQUIPMENT RESPONSE TIME (ERT).
ALL LAMPS TO BE LED
GATE LENGTH SHOWN IS MEASURED FROM MAST C/L TO GATE TIP.

NOTES:

-TEST TERMINAL
-EQUALIZER
-LINE ARRESTER
-HEAVY DUTY ARRESTER
-TWISTED WIRE 2 TURNS PER FOOT
-CONNECTION TO REC./RTU

ALL WIRES #16 AWG UNLESS OTHERWISE NOTED

ALL NEW

DESIGNED 05-15-08
NEW CROSSING MP 54.63
SSD/JRE SEQ.# 38055

BURLINGTON NORTHERN SANTA FE RAILWAY

CROSSING CIRCUIT PLAN
E SANDWICH ROAD HINCKLEY, IL

LS 0003 | MP 54.63 | SH 01 OF 10

PLAN MUST NOT BE MODIFIED WITHOUT APPROVAL OF SIGNAL ENGINEERING

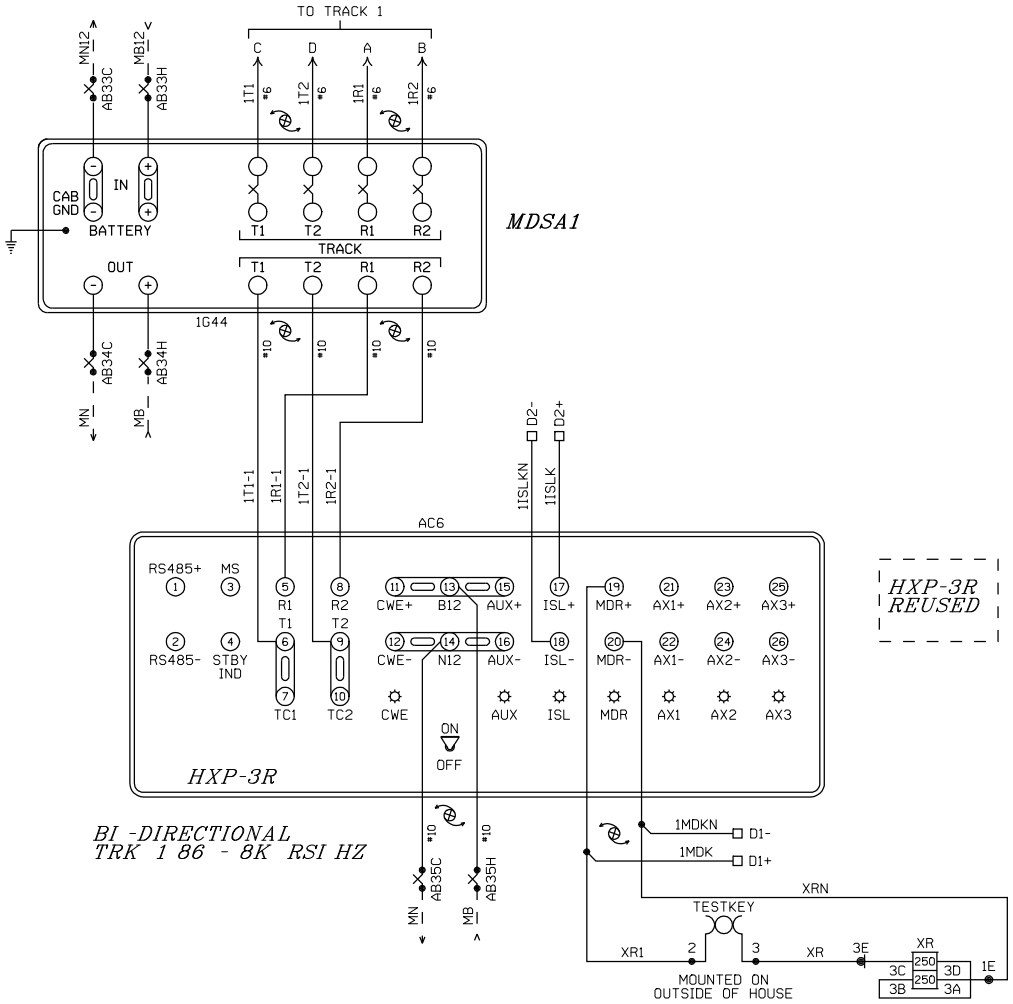

PROGRAM INFORMATION

PROGRAM VERSION 35.0 OR LATER

✱=FIELD ADJUSTMENT TO BE MADE ACCORDING TO THE HXP-3 INSTRUCTION MANUAL AND SUPPLEMENTS.

HXP-3R ADJUSTMENTS

NO.	ADJUSTMENT NAME	TRACK 1
1	APP. LENGTH	2992'
2	WARNING TIME	30 SEC.
3	LIA	✱
4	TC	✱
5	MD RESTART	✱

OPTION ADJUSTMENTS

NO.	ABBREVIATION	TRACK 1
1	TK-ENA	"UP"
2	TK FO	86 HZ
3	CW/MD	"C"
4	UNI-BI	"b" (BI)
5	NBS-C	✱
6	CWEWT	DL (80 SEC.)
7	LOS	DL (16 SEC.)
8	IJ-LOS	DL (5 SEC.)
9	BC	✱
10	P-COMP	✱
11	AX1	NA
12	AX2	NA
13	AX3	NA
17	MDR-AX/OF-TK 1	DL (0)
	CJ-LOS	DL (0)
	PJ-DET	DL (15 SEC.)
	PJ-RX	DL (15)
18	MD-TMR	DL (10 MIN.)
19	MIN-WT	DL (0)
20	FS-RX	DL (0)
	FS-TM	DL (10 MIN.)
21	POS-RX	DL (0)
	POS-TM	DL (0)
22	AR-RX	DL (0)
	AR-TM	DL (10 MIN.)
47	ATO-RX	UP
48	PF-ENA	"dn"

AX ADJUSTMENTS

NO.	ABBREVIATION	AX 1	AX 2	AX 3
1	TK-ASN	NA	NA	NA
2	OF-TK1	NA	NA	NA
3	OF-TK2	NA	NA	NA
4	WT	NA	NA	NA
5	MD-RST	NA	NA	NA
6	CW/MD	NA	NA	NA
7	CJ-LOS	NA	NA	NA
8	PJ-DET	NA	NA	NA
9	PJ-RX	NA	NA	NA
10	POS-ST	NA	NA	NA

SWITCH INFORMATION

SWITCH	TRACK 1
MASTER/SLAVE	MASTER
RSI FAULT JUMPER	0
RSI-LOS JUMPER	1
TLM W1 JUMPER	PINS 1-2
TLM W2 JUMPER	PINS 1-2
TLM W3 JUMPER	PINS 2-3
MINUTE TIMEOUT	5 MIN
CW/MD	CW
STANDBY/AUTO/NORMAL	AUTO

NOTE: DL= DEFAULT LEVEL
NA= NON APPLICABLE

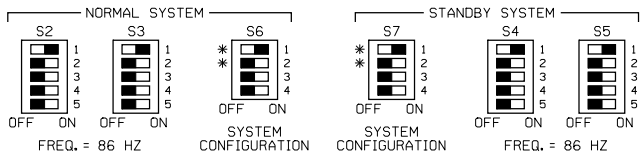

NOTES: FOR S6 AND S7

✱ 1.) ACTUATOR 1 SELECTS NORMAL APPROACH WHEN SET TO ON POSITION.

✱ 2.) WITH ACTUATOR 1 IN OFF POSITION ACTUATOR 2 SELECTS SHORT APPROACH WHEN OFF AND SELECTS VERY SHORT WHEN ON.

3.) ACTUATOR 3 OFF SELECTS HXP OPERATION.

4.) ACTUATOR 4 RESERVED FOR FUTURE USE.

ALL NEW

DESIGNED 05-15-08
NEW CROSSING MP 54.63
SSD/JRE SEQ.# 38055

BURLINGTON NORTHERN SANTA FE RAILWAY

HXP-3R TRACK CIRCUITS
E SANDWICH ROAD HINCKLEY, IL

LS 0003 MP 54.63 SH 02 OF 10

PLAN MUST NOT BE MODIFIED WITHOUT APPROVAL OF SIGNAL ENGINEERING

PROGRAM BNSF4

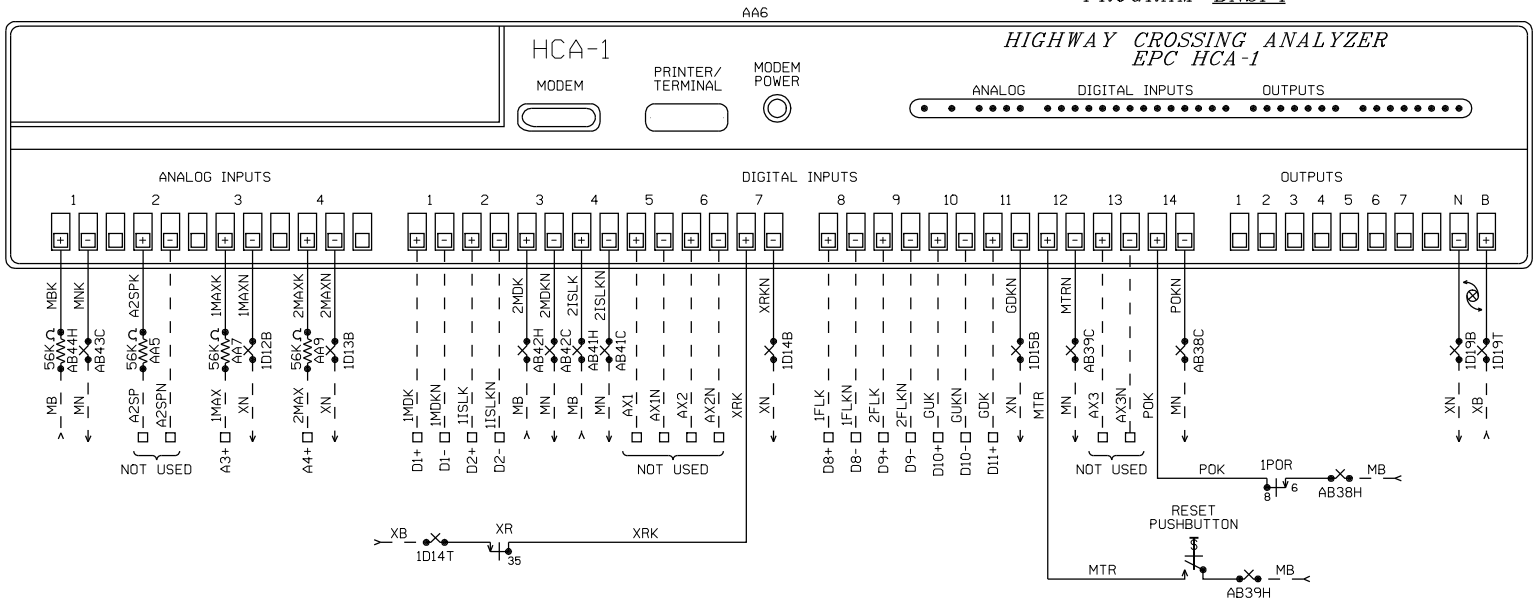

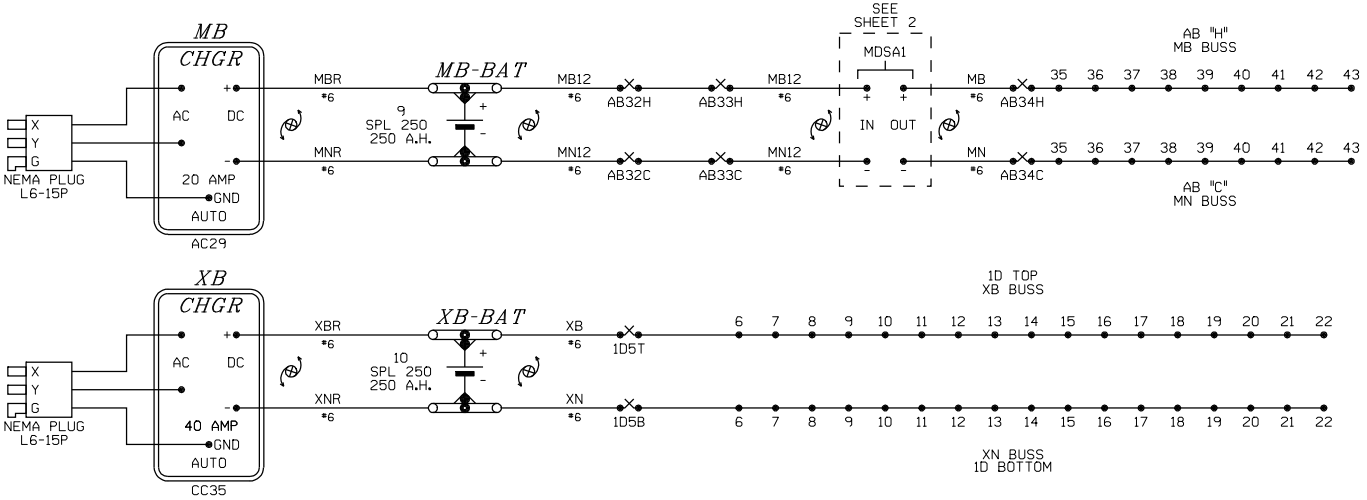

ALL NEW

BURLINGTON NORTHERN SANTA FE RAILWAY

RECORDER AND BATTERY CIRCUITS
E SANDWICH ROAD HINCKLEY, IL

DESIGNED 05-15-08
NEW CROSSING MP 54.63
SSD/JRE SEQ.# 38055

LS 0003 | MP 54.63 | SH 03 OF 10

PLAN MUST NOT BE MODIFIED WITHOUT APPROVAL OF SIGNAL ENGINEERING

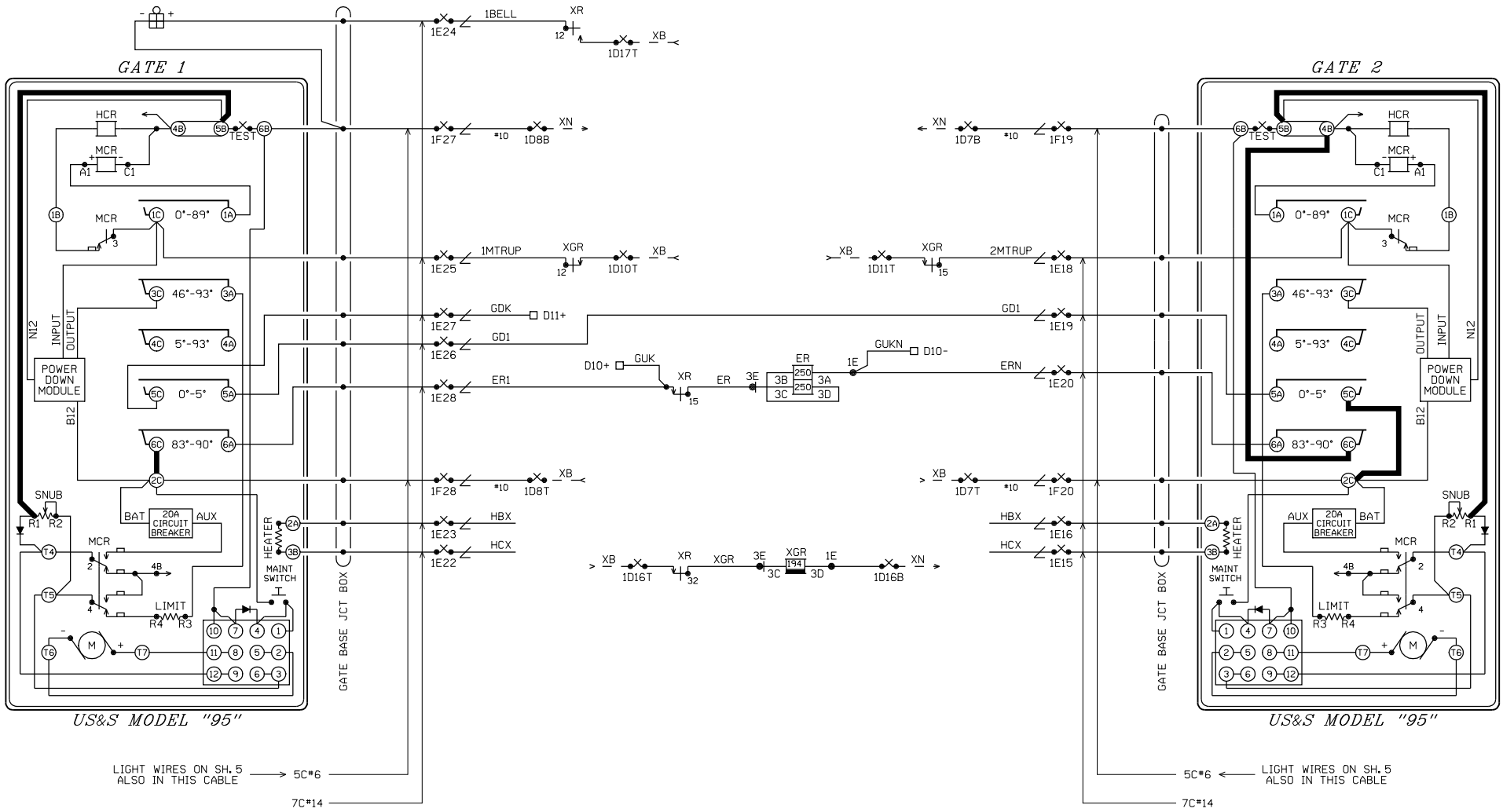

NOTE:
ADD JUMPERS IN GATE SHOWN IN BOLD.

ALL NEW

DESIGNED 05-15-08
NEW CROSSING MP 54.63
SSD/JRE SEQ.# 38055

BURLINGTON NORTHERN SANTA FE RAILWAY

GATE CIRCUIT PLAN
E SANDWICH ROAD HINCKLEY, IL

LS 0003	MP 54.63	SH 04 OF 10

PLAN MUST NOT BE MODIFIED WITHOUT APPROVAL OF SIGNAL ENGINEERING

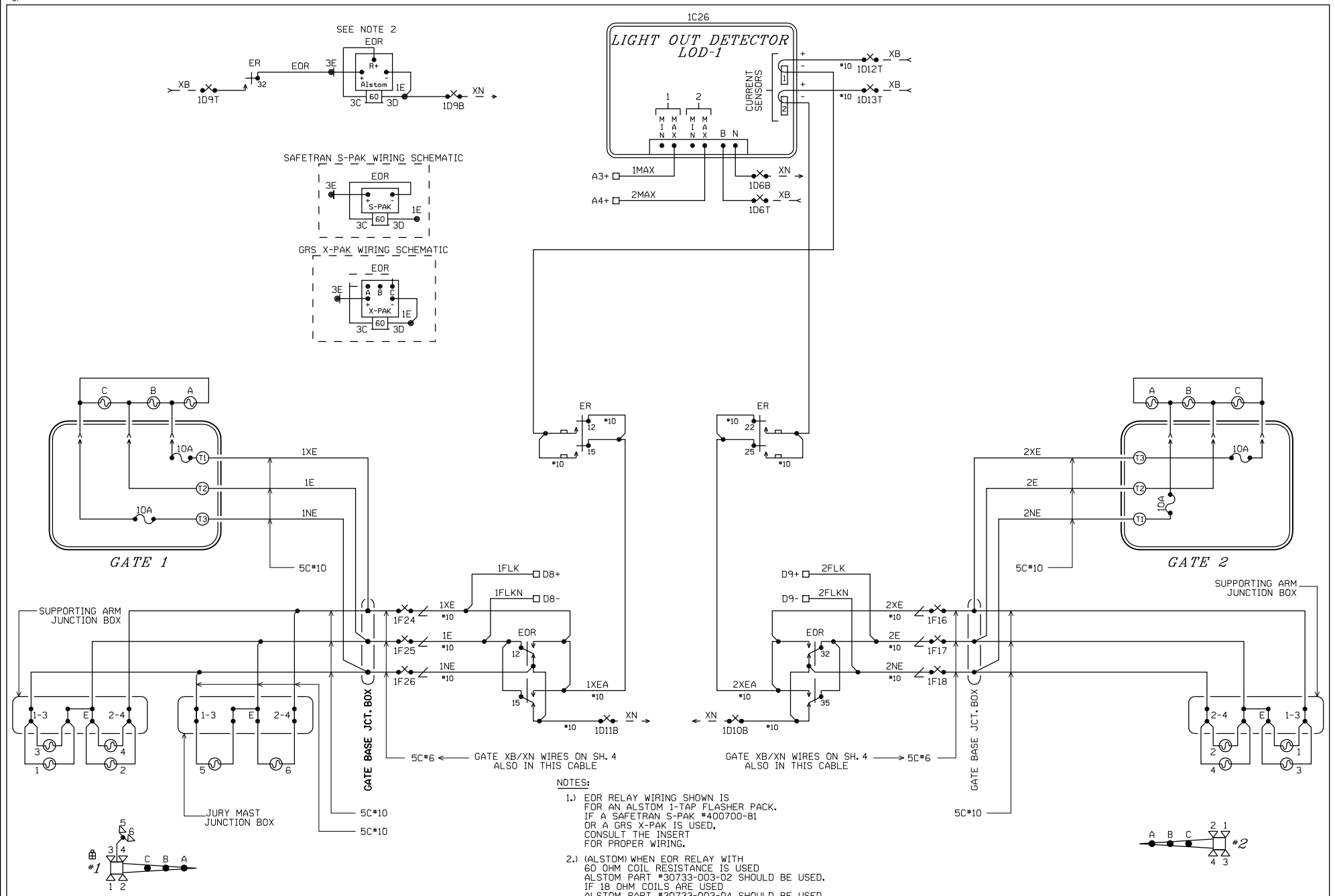

NOTES:

1.) EOR RELAY WIRING SHOWN IS FOR AN ALSTOM 1-TAP FLASHER PACK. IF A SAFETRAN S-PAK #400700-81 OR A GRS X-PAK IS USED, CONSULT THE INSERT FOR PROPER WIRING.

2.) (ALSTOM) WHEN EOR RELAY WITH 60 OHM COIL RESISTANCE IS USED ALSTOM PART #30733-003-02 SHOULD BE USED. IF 18 OHM COILS ARE USED ALSTOM PART #30733-003-04 SHOULD BE USED.

3.) (X-PAK) WHEN EOR RELAY WITH 60 OHM COIL RESISTANCE IS USED CONNECT JUMPER FROM 3C TO "A". IF 18 OHM COILS ARE USED CONNECT JUMPER FROM 3C TO "C".

4.) (S-PAK) DO NOT USE S-PAK WITH 18 OHM COILS

ALL NEW

BURLINGTON NORTHERN SANTA FE RAILWAY

FLASHER CIRCUIT PLAN
E SANDWICH ROAD HINCKLEY, IL

DESIGNED 05-15-08
NEW CROSSING MP 54.63
SSD/JRE SEQ.# 38055

LS 0003	MP 54.63	SH 05 OF 10

PLAN MUST NOT BE MODIFIED WITHOUT APPROVAL OF SIGNAL ENGINEERING

SIDE D

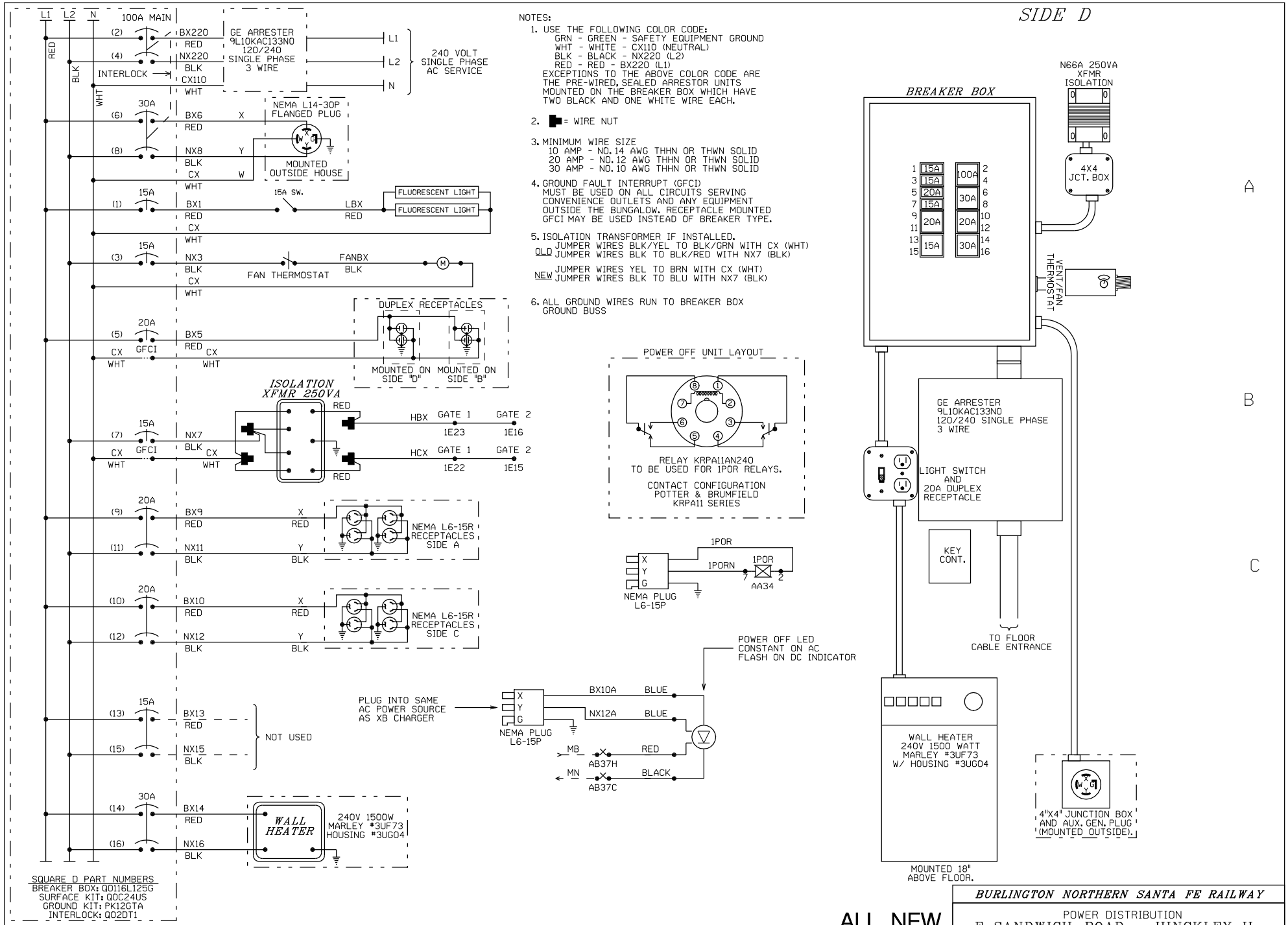

ALL NEW

BURLINGTON NORTHERN SANTA FE RAILWAY

POWER DISTRIBUTION
E SANDWICH ROAD HINCKLEY, IL

DESIGNED 05-15-08
NEW CROSSING MP 54.63
SSD/JRE SEQ.# 38055

LS 0003 MP 54.63 SH 06 OF 10

PLAN MUST NOT BE MODIFIED WITHOUT APPROVAL OF SIGNAL ENGINEERING

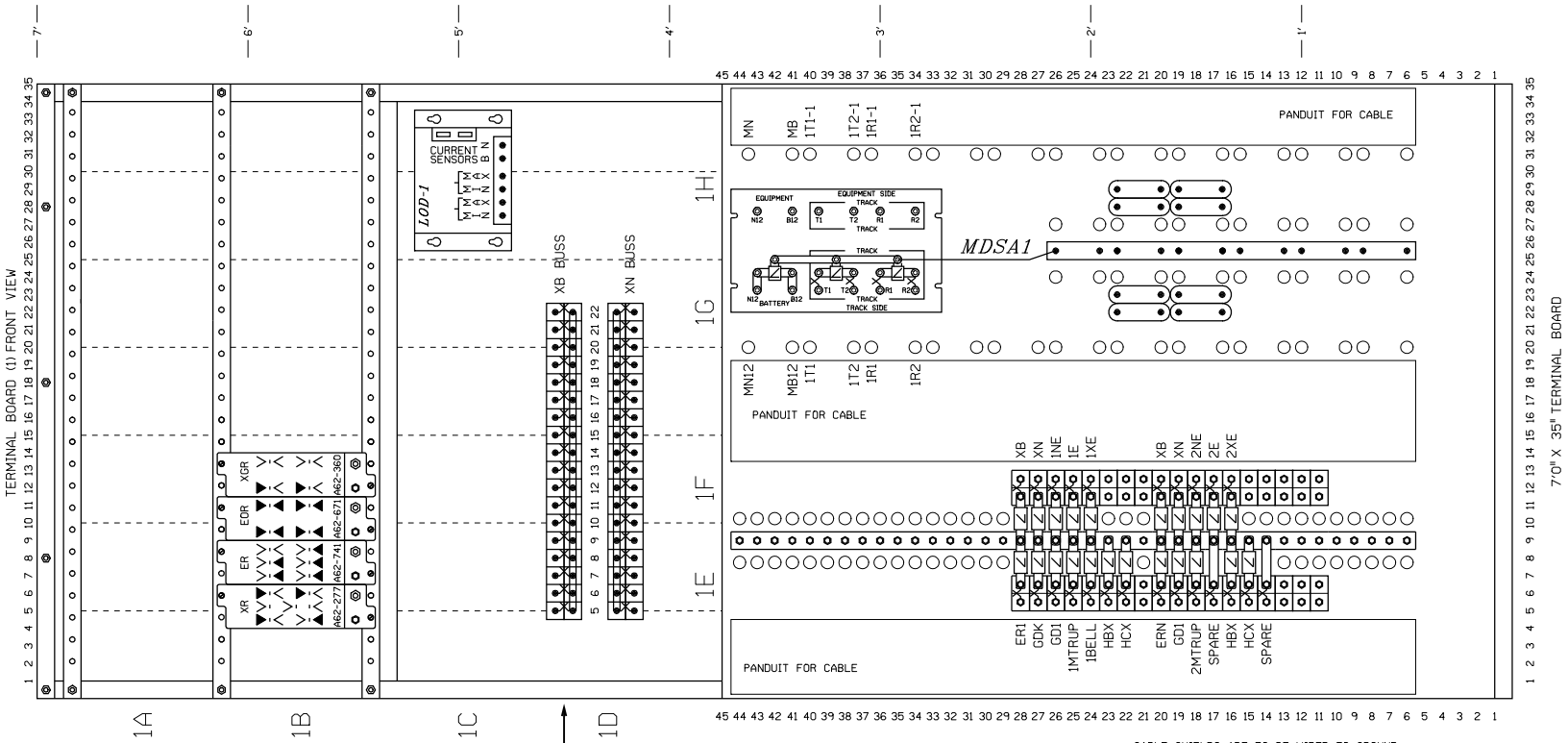

CABLE SHIELDS ARE TO BE WIRED TO GROUND
SPARE CABLE CONDUCTORS ARE TO BE CONNECTED TO GROUND

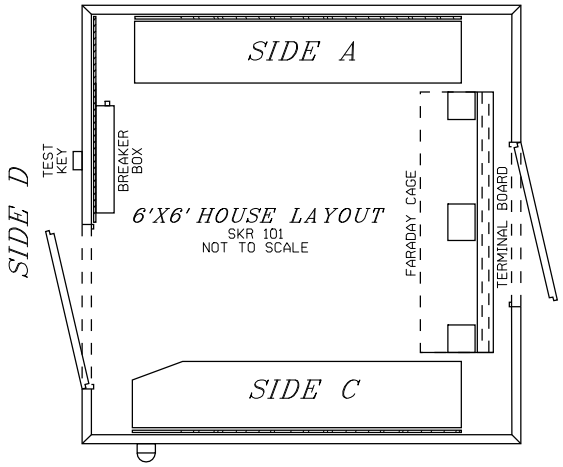

NOTE: INSTALL POWER OFF INDICATOR LIGHT ON TRACK SIDE NEAREST THE HIGHWAY AND NEAR EAVE OF HOUSE.

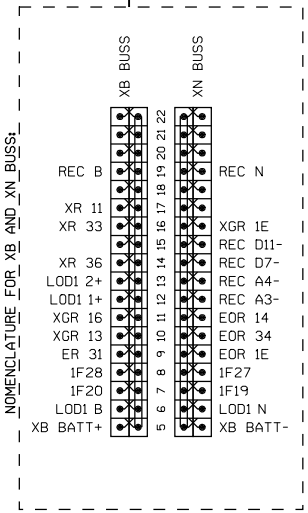

FARADAY CAGE LAYOUT NOTES:

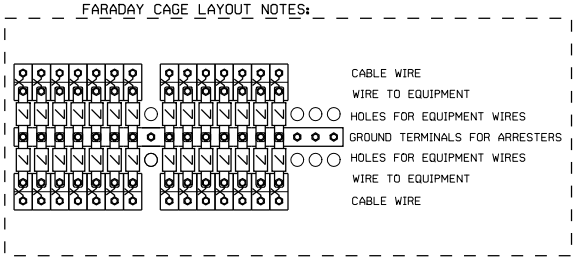

RELAY CROSS REFERENCE

GRS	SAFETRAN
A62-277	400004
A62-741	400005
A62-671	400700
A62-360	400200

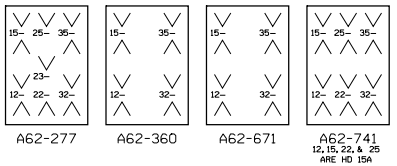

ALL NEW

DESIGNED 05-15-08
NEW CROSSING MP 54.63
SSD/JRE SEQ.# 38055

BURLINGTON NORTHERN SANTA FE RAILWAY

TERMINAL BOARD LAYOUT
E SANDWICH ROAD HINCKLEY, IL

LS 0003 | MP 54.63 | SH 07 OF 10

PLAN MUST NOT BE MODIFIED WITHOUT APPROVAL OF SIGNAL ENGINEERING

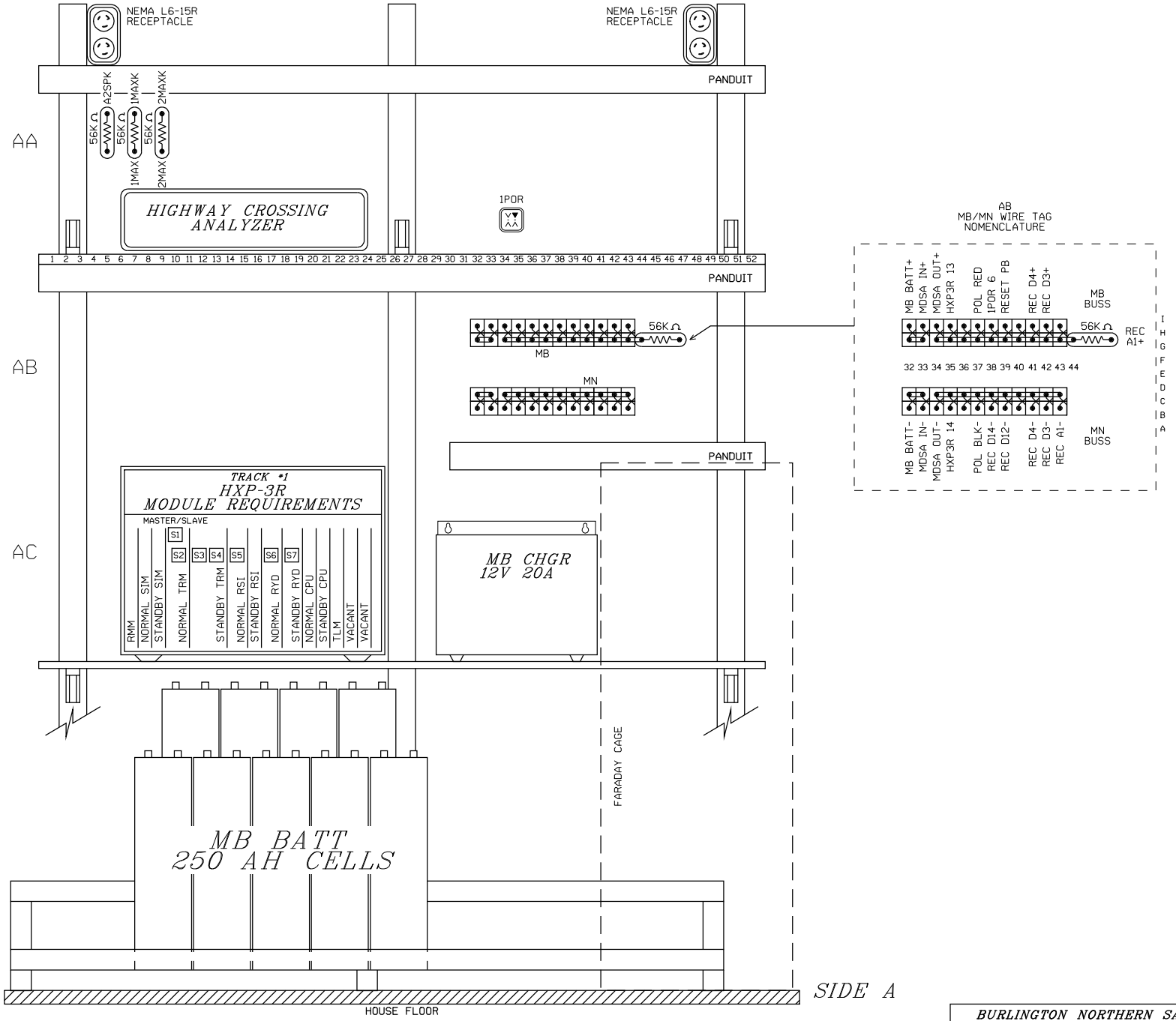

ALL NEW

BURLINGTON NORTHERN SANTA FE RAILWAY

SIDE "A" SHELF LAYOUT
E SANDWICH ROAD HINCKLEY, IL

DESIGNED 05-15-08
NEW CROSSING MP 54.63
SSD/JRE SEQ.# 38055

LS 0003 | MP 54.63 | SH 08 OF 10

PLAN MUST NOT BE MODIFIED WITHOUT APPROVAL OF SIGNAL ENGINEERING

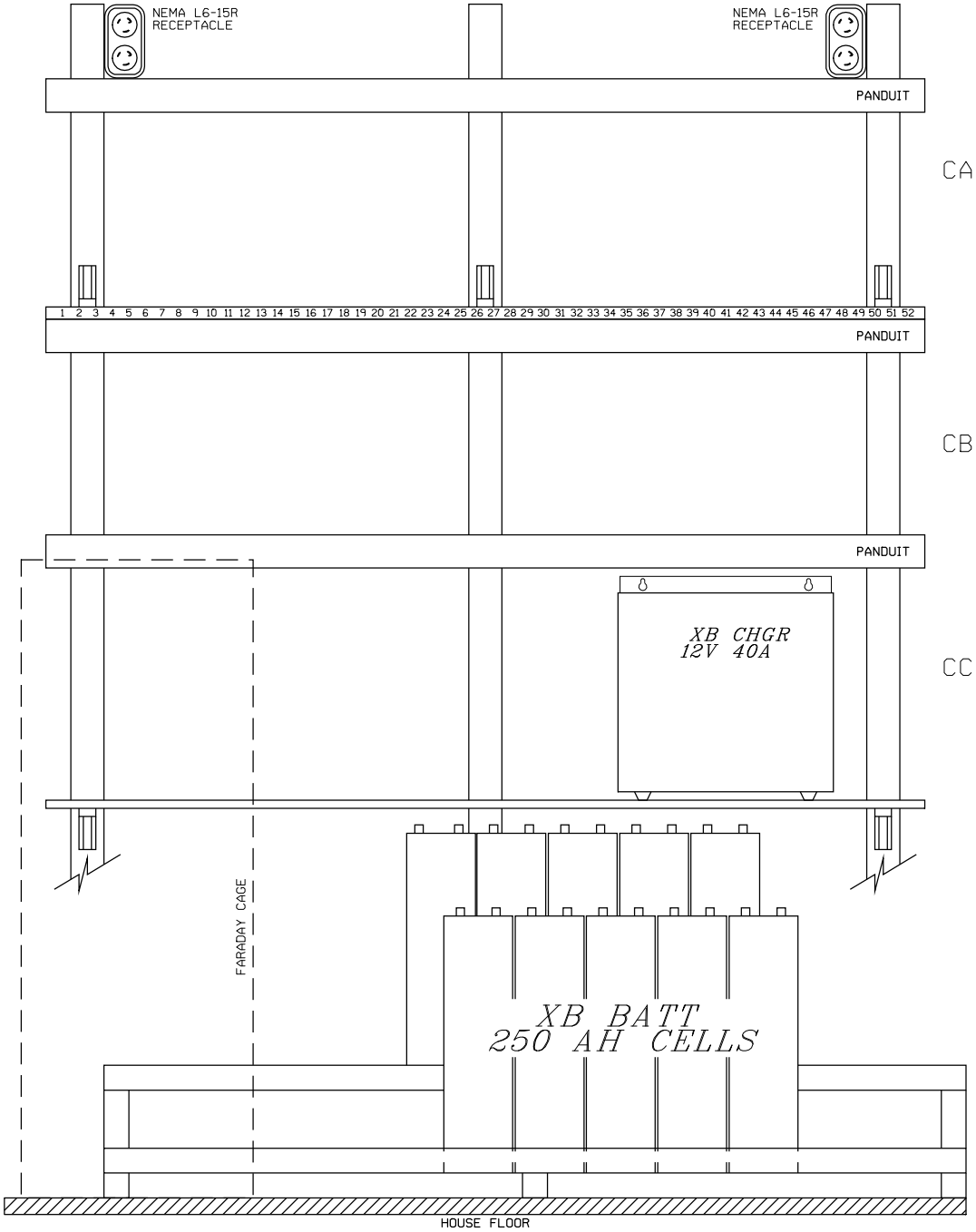

SIDE C

ALL NEW

							DESIGNED 05-15-08 NEW CROSSING MP 54.63 SSD/JRE SEQ.# 38055	BURLINGTON NORTHERN SANTA FE RAILWAY SIDE "C" SHELF LAYOUT E SANDWICH ROAD HINCKLEY, IL		
								LS 0003	MP 54.63	SH 09 OF 10

PLAN MUST NOT BE MODIFIED WITHOUT APPROVAL OF SIGNAL ENGINEERING

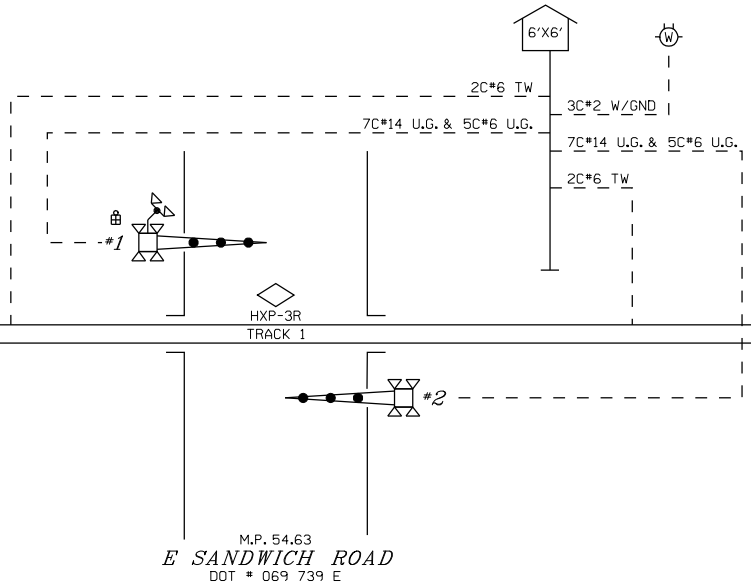

ALL NEW

BURLINGTON NORTHERN SANTA FE RAILWAY

CABLE LAYOUT
E SANDWICH ROAD HINCKLEY, IL

DESIGNED 05-15-08
NEW CROSSING MP 54.63
SSD/JRE SEQ.# 38055

LS 0003 | MP 54.63 | SH 10 OF 10