PRAIRIE STATE Energy Campus

PRAIRIE STATE ENERGY CAMPUS

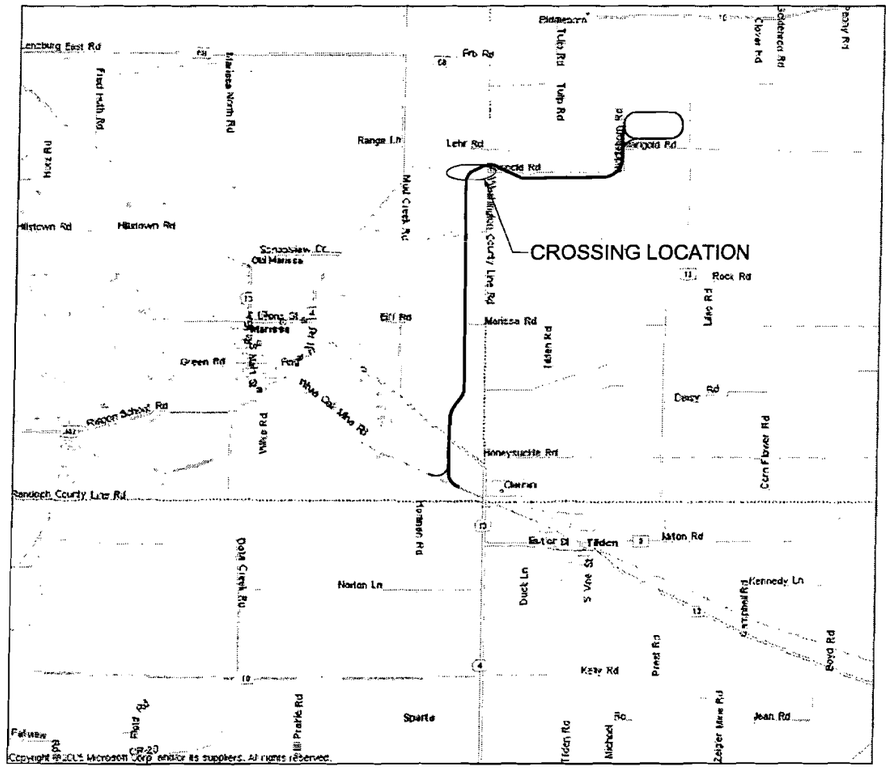

SHEET INDEX

SHEET NO.	DESCRIPTION
1	COVER SHEET
2 - 5	CROSSING EXHIBIT
1 - 10	SIGNAL EXHIBIT
1	DETOUR EXHIBIT

PROPOSED ROAD CROSSING
MARIGOLD ROAD

ROAD CROSSING EXHIBIT

RailWorks Track Services®
4301 BRIDGETON INDUSTRIAL DR.
ST. LOUIS, MISSOURI 63044
(314) 291-2233 FAX (314) 291-2266

DESIGN NINE
11166 TESSON FERRY ROAD
SUITE 100
ST. LOUIS MO, 63123-6966
(314) 729-7600
ENGINEERING SERVICES FOR RAILROADS AND INDUSTRY

REV #	BY	DATE	DESCRIPTION

Drawn By:	JPG	Date:	07/28/2008
Checked By:	RSS/BER	CAD File:	8034-1.dgn
Scale:	NO SCALE	Drawing No.:	1 of 5

- ISSUED -
FOR CONSTRUCTION

COVER PAGE
MARISSA, ILLINOIS
TRACKAGE TO SERVE:
PRAIRIE STATE GENERATING CO., LLC.

S:\DGN\Railworks\Prairie State Energy Campus\Design\8034-1.dgn
JPG 7/28/2008 10:11:11 PM TITLE BLOCKS

GENERAL NOTES
1. PAVEMENT MARKINGS AND ADVANCE WARNING SIGNS ASSOCIATED WITH THE GRADE CROSSING INSTALLATION SHALL BE INSTALLED AS INDICATED ON THE DRAWING AND IN ACCORDANCE TO THE "MANUAL ON UNIFORM TRAFFIC CONTROL DEVICES - MILLENIUM EDITION."
2. ALL DRAINAGE AND PAVEMENT WORK TO BE DONE IN ACCORDANCE WITH CURRENT STATE OF ILLINOIS DEPARTMENT OF TRANSPORTATION STANDARD SPECIFICATIONS FOR ROAD AND BRIDGE CONSTRUCTION.
3. EXISTING TREES, SHRUBS, BRUSH, ETC. TO BE CLEARED FROM APPROACH SIGHT TRIANGLES TO PROVIDE UNOBSTRUCTED VIEW OF TRACK BY MOTORISTS. APPROACH SIGHT TRIANGLES TO BE IN ALL FOUR QUADRANTS. APPROACH SIGHT TRIANGLES ALONG CENTERLINE OF HIGHWAY AND CENTERLINE OF TRACK TO BE IN ACCORDANCE WITH U.S. DEPARTMENT OF TRANSPORTATION FEDERAL HIGHWAY ADMINISTRATION RAILROAD-HIGHWAY GRADE CROSSING HANDBOOK REVISED SECOND EDITION AUGUST 2007.
4. ALL EXISTING UTILITIES INDICATED ON THE DRAWINGS ARE ACCORDING TO THE BEST INFORMATION AVAILABLE TO THE ENGINEER. HOWEVER, ALL UTILITIES ACTUALLY EXISTING MAY NOT BE SHOWN. ALL UTILITIES SHOULD BE LOCATED AND IDENTIFIED IN THE FIELD PRIOR TO COMMENCEMENT OF ANY WORK.
5. POSTED SPEED LIMIT 55 MPH.

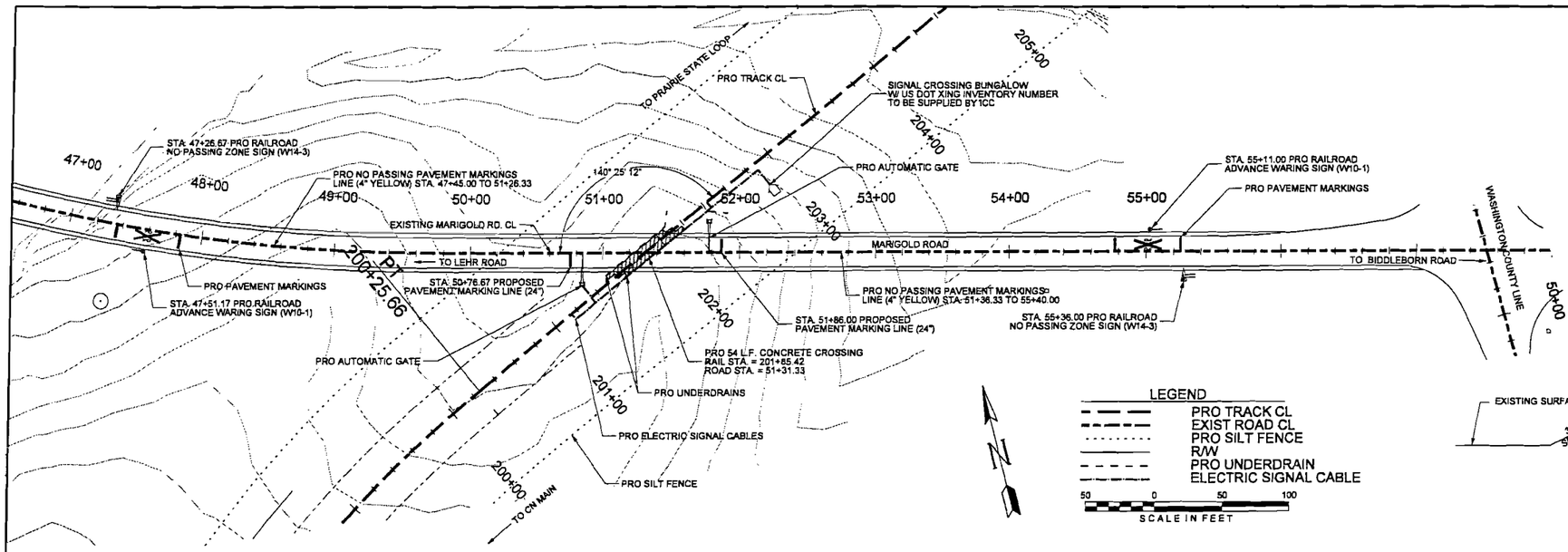

PLAN VIEW

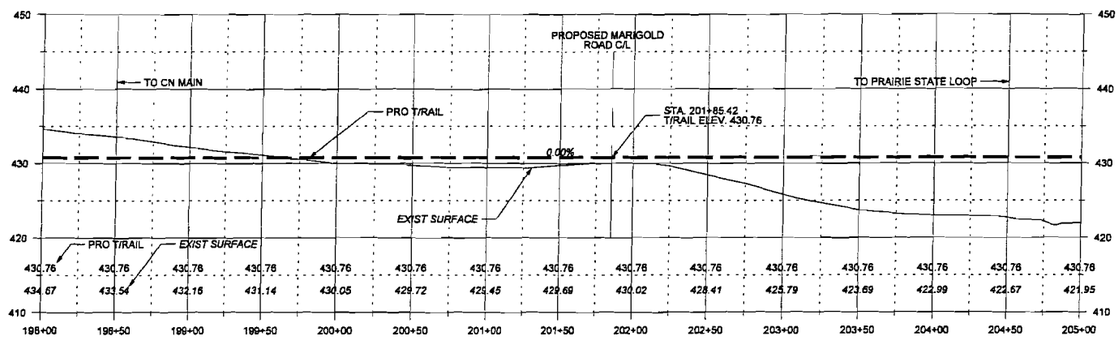

PRO TRACK STA. 201+85.42 = PRO ROAD STA. 51+31.33 = C/L ROAD CROSSING

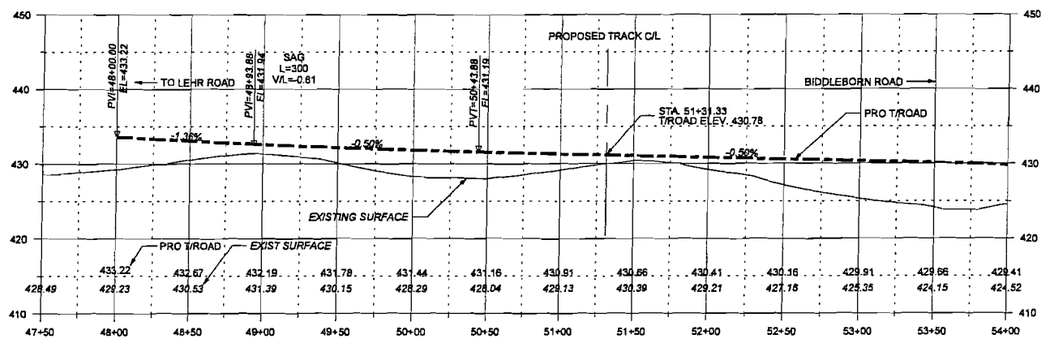

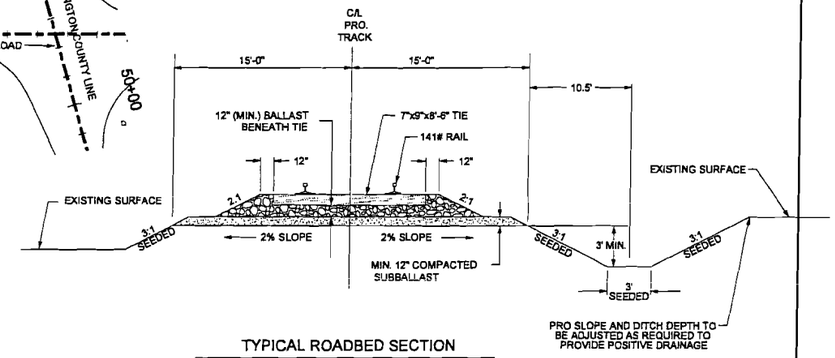

TYPICAL ROADBED SECTION

(NOT TO SCALE)

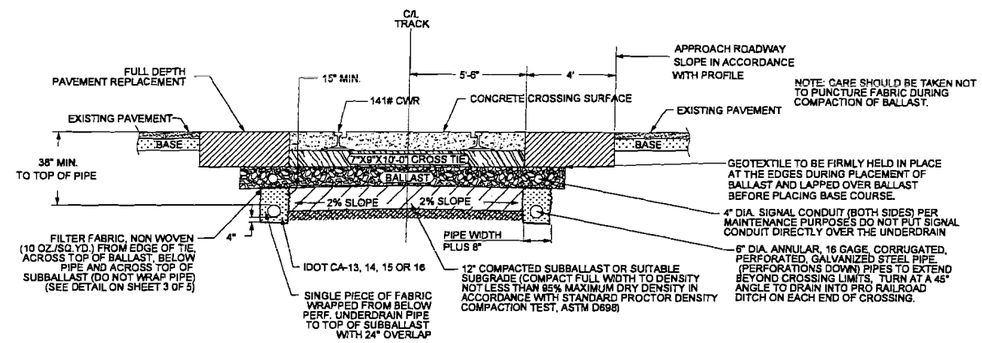

TYPICAL SECTION THROUGH ROADWAY CROSSING

(NOT TO SCALE)

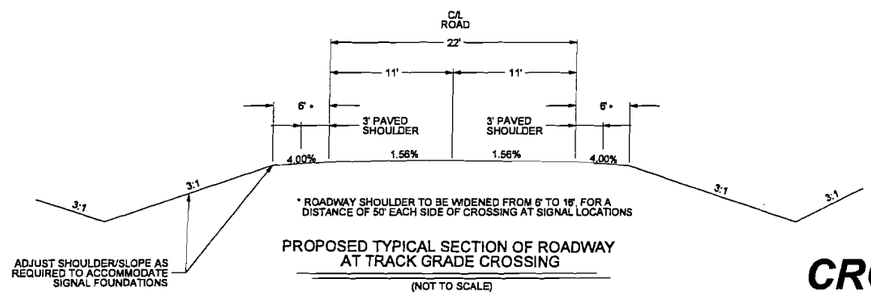

PROPOSED TYPICAL SECTION OF ROADWAY AT TRACK GRADE CROSSING

(NOT TO SCALE)

CROSSING EXHIBIT

RailWorks Track Services®
4301 BRIDGETON INDUSTRIAL DR.
ST. LOUIS, MISSOURI 63044
(314) 291-2233 FAX (314) 291-2266

DESIGN NINE
11166 TESSON FERRY ROAD
SUITE 100
ST. LOUIS MO, 63123-6966
(314) 729-7600
ENGINEERING SERVICES FOR RAILROADS AND INDUSTRY

REV #	BY	DATE	DESCRIPTION

Drawn By:	JPG	Date:	07/24/2008
Checked By:	RSS/BER	CAD File:	08034-1.dgn
Scale:	AS SHOWN	Drawing No.:	2 of 5

- ISSUED -
FOR CONSTRUCTION

LEAD TRACK CROSSING OF MARIGOLD ROAD

MARIGOLD ROAD
MARISSA, ILLINOIS
TRACKAGE TO SERVE:
PRAIRIE STATE GENERATING CO., LLC.

#FILE# #USERNAME# #TIME# #MODELNAME#

Figure 8D-1. Composite Drawing of Active Traffic Control Devices for Highway-Rail Grade Crossings Showing Clearances

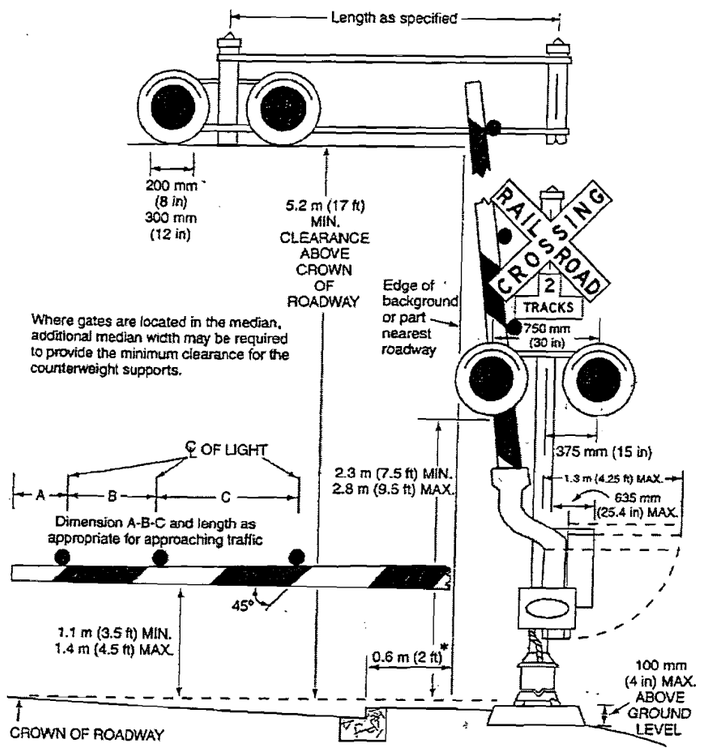

* For locating this reference line at other than curb section installation, see Section 8D.01.

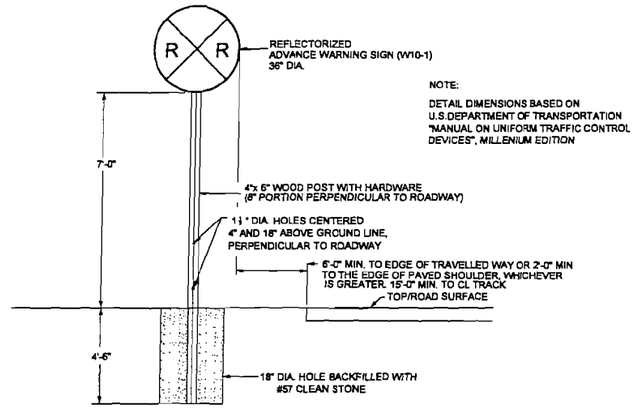

NOTE:

DETAIL DIMENSIONS BASED ON U.S.DEPARTMENT OF TRANSPORTATION "MANUAL ON UNIFORM TRAFFIC CONTROL DEVICES", *MILLENIUM EDITION*

ADVANCE WARNING SIGN DETAIL

(NOT TO SCALE)

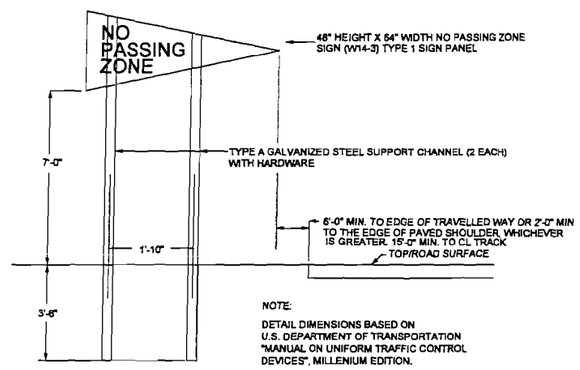

NOTE:

DETAIL DIMENSIONS BASED ON U.S. DEPARTMENT OF TRANSPORTATION "MANUAL ON UNIFORM TRAFFIC CONTROL DEVICES", MILLENIUM EDITION.

NO PASSING ZONE SIGN DETAIL

(NOT TO SCALE)

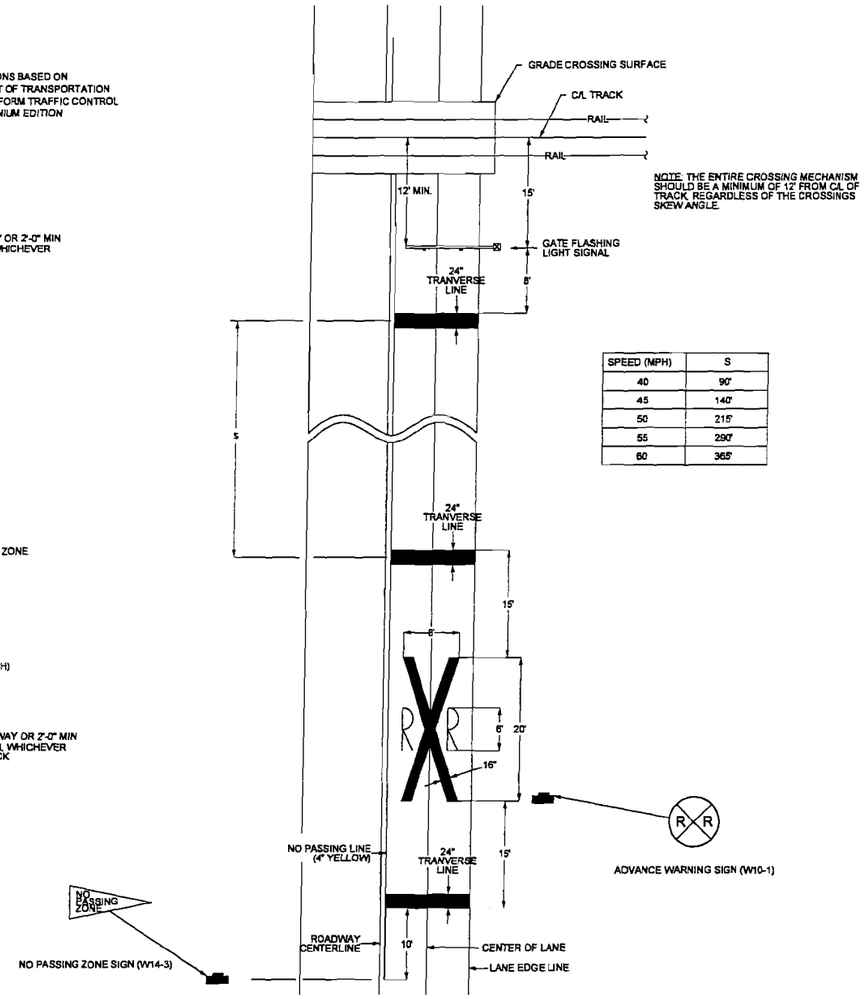

NOTE: THE ENTIRE CROSSING MECHANISM SHOULD BE A MINIMUM OF 12' FROM CL OF TRACK, REGARDLESS OF THE CROSSINGS SKEW ANGLE.

SPEED (MPH)	S
40	90'
45	140'
50	215'
55	290'
60	365'

NOTE: THE MARKINGS ARE SYMMETRICAL ABOUT TRACK CENTERLINE.

PAVEMENT MARKING

(NOT TO SCALE)

NOTE:
1.) * 6' MINIMUM FROM TRAVELED WAY WHEN NO CURB
2.) THIS CROSSING FLASHING GATES ONLY, NO CANTILEVER SIGNAL

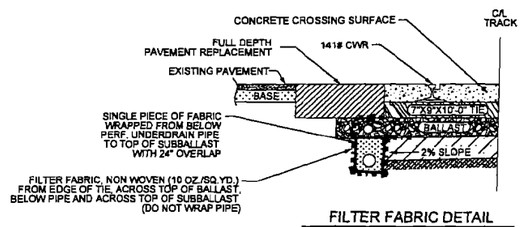

NOTE: CARE SHOULD BE TAKEN NOT TO PUNCTURE FABRIC DURING COMPACTION OF BALLAST.

FILTER FABRIC DETAIL

(NOT TO SCALE)

CROSSING EXHIBIT

RailWorks Track Services
4301 BRIDGETON INDUSTRIAL DR.
ST. LOUIS, MISSOURI 63044
(314) 291-2233 FAX (314) 291-2266

DESIGN NINE
11166 TESSON FERRY ROAD
SUITE 100
ST. LOUIS MO, 63123-6966
(314) 729-7600
ENGINEERING SERVICES FOR RAILROADS AND INDUSTRY

REV #	BY	DATE	DESCRIPTION

Drawn By:	JPG	Date:	07/24/2008
Checked By:	RSS/BER	CAD File:	8034-1.dgn
Scale:	NO SCALE	Drawing No.:	3 of 5

- ISSUED -
FOR CONSTRUCTION

MISCELLANEOUS DETAILS

MARIGOLD ROAD
MARISSA, ILLINOIS
TRACKAGE TO SERVE:
PRAIRIE STATE GENERATING CO., LLC.

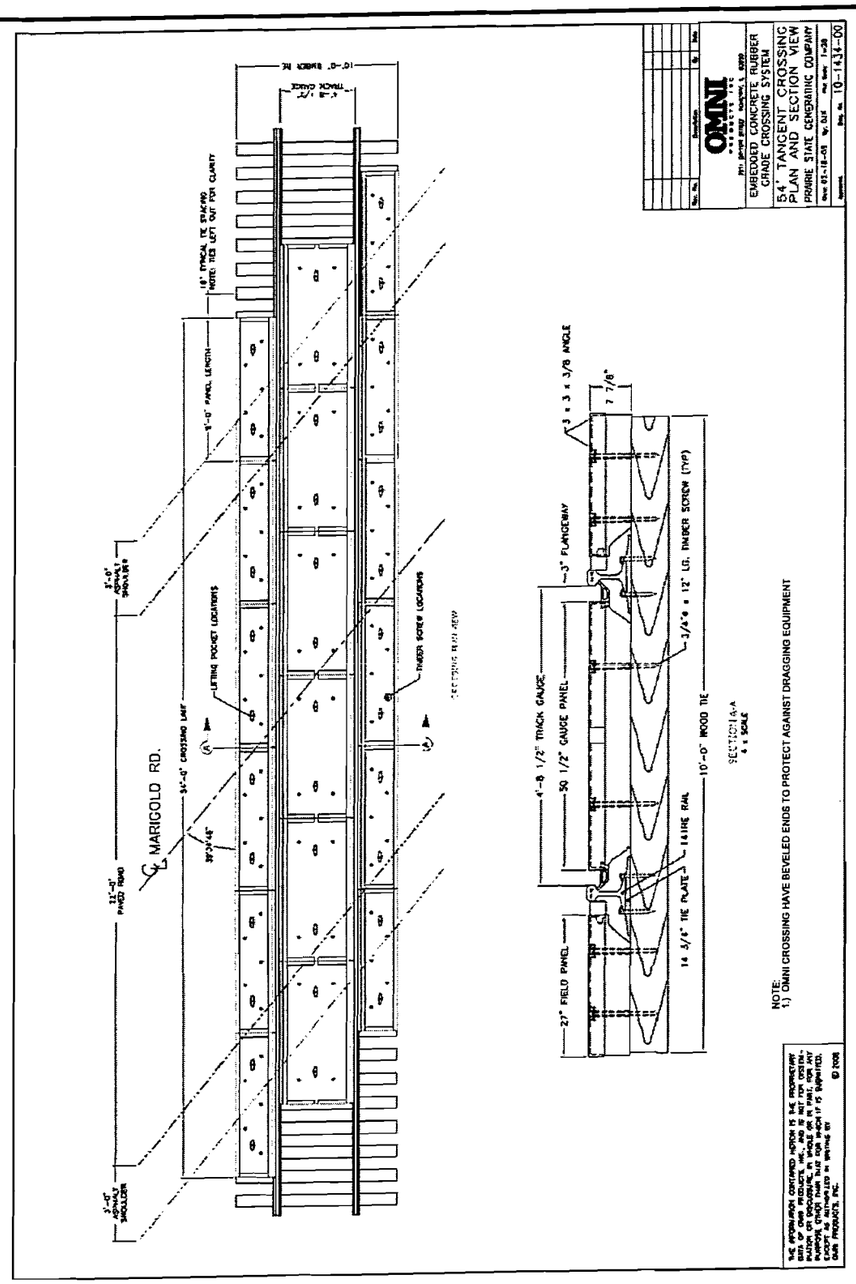

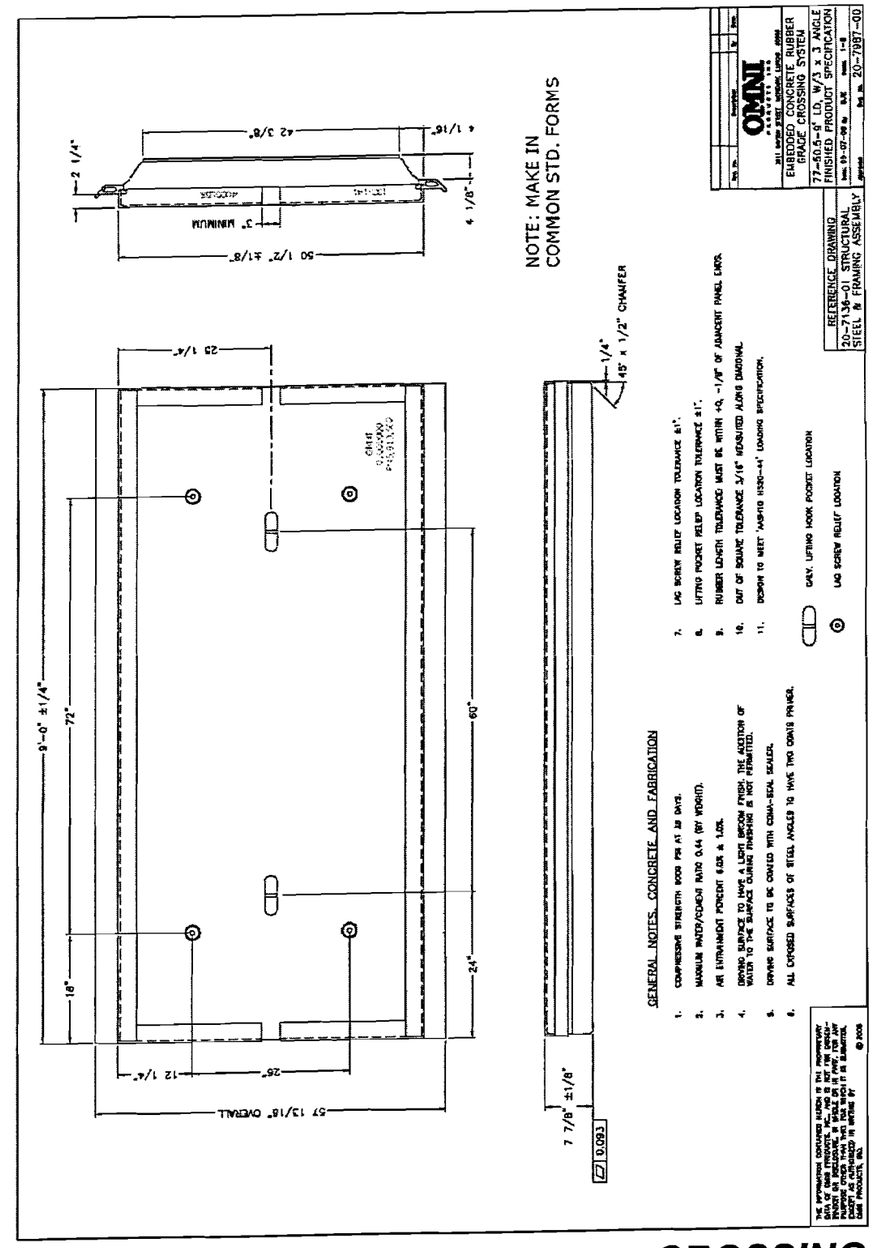

CROSSING EXHIBIT

RailWorks Track Services
4301 BRIDGETON INDUSTRIAL DR.
ST. LOUIS, MISSOURI 63044
(314) 291-2233 FAX (314) 291-2266

DESIGN NINE
11166 TESSON FERRY ROAD
SUITE 100
ST. LOUIS MO, 63123-6966
(314) 729-7600
ENGINEERING SERVICES FOR RAILROADS AND INDUSTRY

REV #	BY	DATE	DESCRIPTION

Drawn By:	JPG	Date:	07/24/2008
Checked By:	RSS/BER	CAD File:	8034-1.dgn
Scale:	NO SCALE	Drawing No.:	4 of 5

- ISSUED -
FOR CONSTRUCTION

CONCRETE GRADE CROSSING

MARIGOLD ROAD
MARISSA, ILLINOIS
TRACKAGE TO SERVE:
PRAIRIE STATE GENERATING CO., LLC.

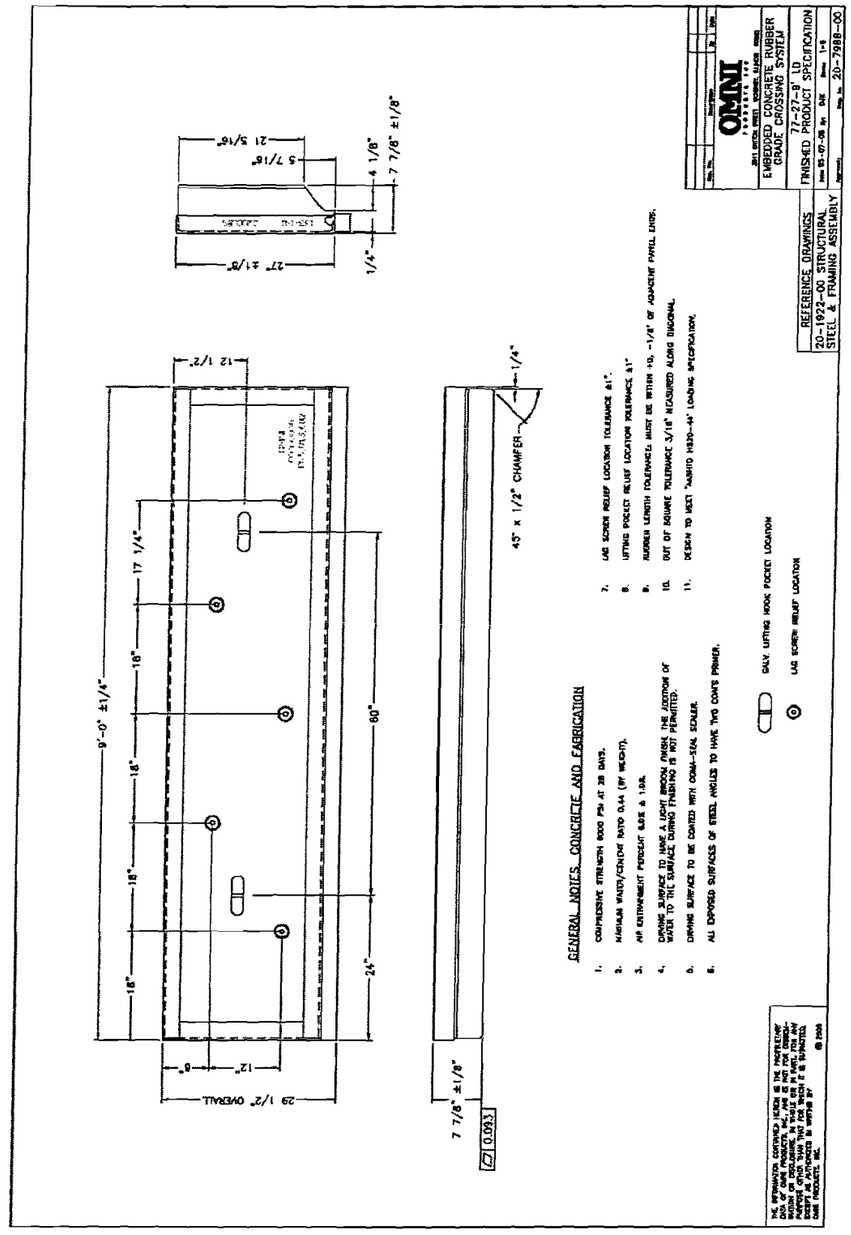

GENERAL NOTES: CONCRETE AND FABRICATION

1. COMPRESSIVE STRENGTH 6000 PSI AT 28 DAYS.
2. MAXIMUM WATER/CONCRETE RATIO 0.44 (BY WEIGHT).
3. AIR ENTRAINMENT PERCENT 6.0% ± 1.0%.
4. CURING SURFACE TO HAVE A LIGHT BROOM FINISH THE ADDITION OF WATER TO THE SURFACE DURING FINISHING IS NOT PERMITTED.
5. CURING SURFACE TO BE COATED WITH CONA-SEAL SEALER.
6. ALL EXPOSED SURFACES OF STEEL ANGLES TO HAVE TWO COATS PRIMER.
7. LAG SCREW RELIEF LOCATION TOLERANCE ±1".
8. LIFTING POCKET RELIEF LOCATION TOLERANCE ±1"
9. RUBBER LENGTH TOLERANCE WILL MUST BE WITHIN +10, -1/4" OF ADJACENT PANEL ENDS.
10. OUT OF SQUARE TOLERANCE 3/16" MEASURED ALONG DIAGONAL.
11. DESIGN TO MEET "AASHTO H20-44" LOADING SPECIFICATION.

GALV. LIFTING HOOK POCKET LOCATION

LAG SCREW RELIEF LOCATION

THE INFORMATION CONTAINED HEREIN IS THE PROPRIETARY PROPERTY OF OMNI RUBBER PRODUCTS, INC. AND IS TO BE USED WITHOUT OR DISCLOSURE, IN WHOLE OR IN PART, FOR ANY PURPOSE OTHER THAN THAT FOR WHICH IT IS SPECIFICALLY FURNISHED UNLESS EXPRESS WRITTEN AUTHORIZATION IS ISSUED BY AN AUTHORIZED REPRESENTATIVE OF OMNI PRODUCTS, INC. ©2005

OMNI RUBBER PRODUCTS, INC.
2811 WITCH HOLLOW ROAD, ROCKFORD, IL 61109

No.	Description	By	Date

EMBEDDED CONCRETE RUBBER GRADE CROSSING SYSTEM
77-27-8' LD
FINISHED PRODUCT SPECIFICATION
Date 05-07-08 By DAE Sheet 1-4
Dwg. No. 20-7988-00

REFERENCE DRAWINGS:
20-1922-00 STRUCTURAL
STEEL & FRAMING ASSEMBLY

NOTE:
1) OMNI PANELS HAVE BEVELED ENDS TO PROTECT AGAINST DRAGGING EQUIPMENT

CROSSING EXHIBIT

RailWorks Track Services
4301 BRIDGETON INDUSTRIAL DR.
ST. LOUIS, MISSOURI 63044
(314) 291-2233 FAX (314) 291-2266

DESIGN NINE
11166 TESSON FERRY ROAD
SUITE 100
ST. LOUIS MO, 63123-6966
(314) 729-7600
ENGINEERING SERVICES FOR RAILROADS AND INDUSTRY

REV #	BY	DATE	DESCRIPTION

Drawn By:	JPG	Date:	07/24/2008
Checked By:	RSS/BER	CAD File:	8034-1.dgn
Scale:	NO SCALE	Drawing No.:	5 of 5

- ISSUED -
FOR CONSTRUCTION

CONCRETE GRADE CROSSING

MARIGOLD ROAD
MARISSA, ILLINOIS
TRACKAGE TO SERVE:
PRAIRIE STATE GENERATING CO., LLC.

FILE *USERNAME* *TIME* *MODELNAME*

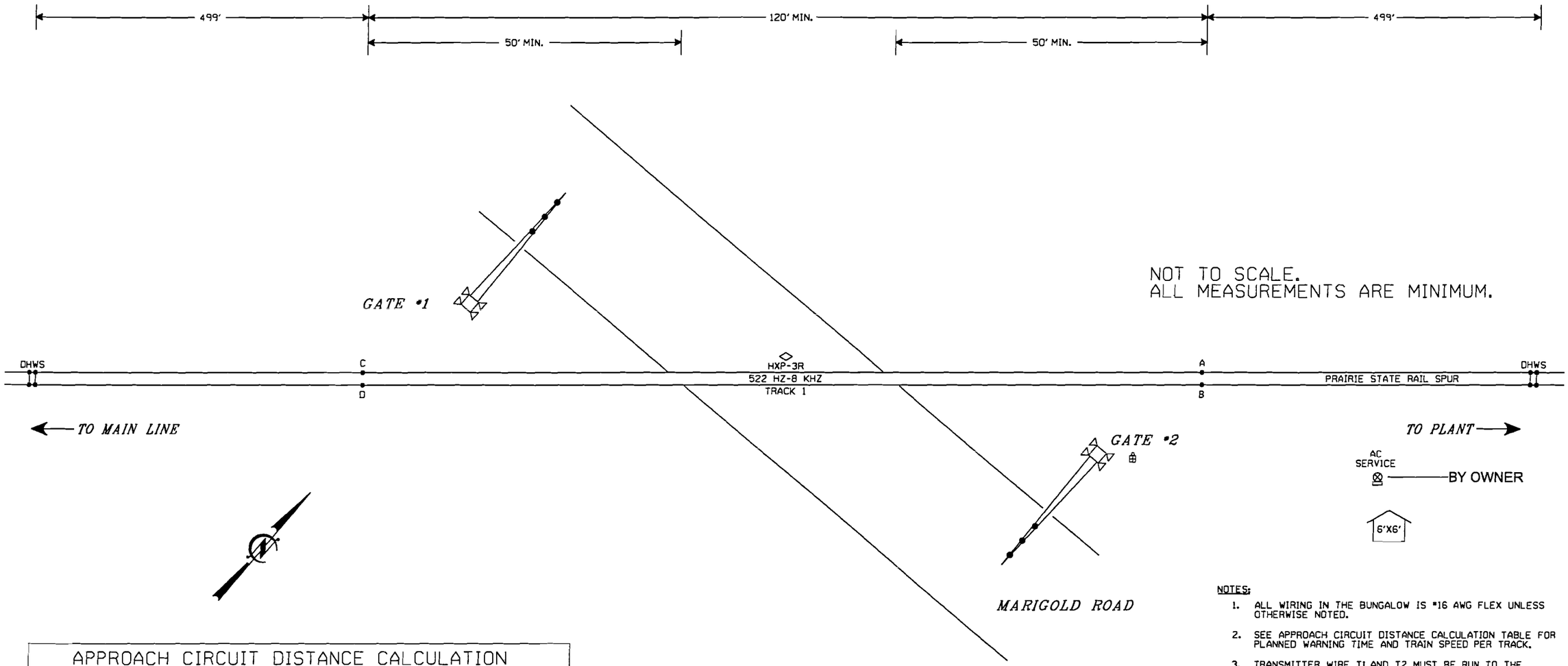

APPROACH CIRCUIT DISTANCE CALCULATION	
	TRACK1
BASE WARNING TIME	30 SEC
PLUS TIME FOR CLEARANCE DISTANCE > 35'	0 SEC
EQUALS PLANNED WARNING TIME	30 SEC
PLUS TIME FOR EQUIPMENT RESPONSE	4 SEC
PLUS TIME FOR TRAFFIC PRE-EMPTION	0 SEC
EQUALS CIRCUIT APPROACH TIME	34 SEC
TIMES MAXIMUM PLANNED TRAIN SPEED	10 MPH
TIMES RATIO OF FEET PER SECOND TO MILE PER HOUR	22/15
EQUALS APPROACH CIRCUIT DISTANCE WITH ANY FRACTIONAL VALUE INCREASED TO FULL UNIT	499 FT

LEGEND:

- -TEST TERMINAL
- -EQUALIZER
- -ARRESTER TO GROUND
- -TWISTED WIRE 2 TURNS PER FOOT
- -INSULATED NUT

NOTES:

1. ALL WIRING IN THE BUNGALOW IS #16 AWG FLEX UNLESS OTHERWISE NOTED.
2. SEE APPROACH CIRCUIT DISTANCE CALCULATION TABLE FOR PLANNED WARNING TIME AND TRAIN SPEED PER TRACK.
3. TRANSMITTER WIRE T1 AND T2 MUST BE RUN TO THE TRACK BUNGALOW SIDE OF CROSSING.
4. APPROACH DISTANCES ARE TO BE MEASURED FROM THE CIRCUIT FEED POINTS.
5. DOUBLE HARDWIRE SHUNT FOR TERMINATION. NON SIGNALIZED TRACK
6. GATE ARM 16-32' UHI LED LIGHTS SUPPLIED. FINAL ARM LENGTH TO BE DETERMINED IN FIELD.

SIGNAL EXHIBIT

RailWorks Track Services
4301 BRIDGETON INDUSTRIAL DR.
ST. LOUIS, MISSOURI 63044
(314) 291-2233 FAX (314) 291-2266

REV #	BY	DATE	DESCRIPTION

DESIGN NINE
11166 TESSON FERRY ROAD
SUITE 100
ST. LOUIS MO, 63123-6966
(314) 729-7600
ENGINEERING SERVICES FOR RAILROADS AND INDUSTRY

Drawn By:	JPG	Date:	07/24/2008
Checked By:	RSS/BER	CAD File:	8034-1.dgn
Scale:	NO SCALE	Drawing No.:	1 of 10

THE OPERATION OF THE CIRCUITS AND EQUIPMENT REPRESENTED HEREIN CANNOT BE FULLY CHECKED UNTIL ALL CIRCUITS AND DEVICES ARE CONNECTED TO FORM A COMPLETE SYSTEM, OR AN EFFECTIVE SUBSYSTEM. SUCH SYSTEM OR SUBSYSTEM MUST BE GIVEN COMPLETE CIRCUIT AND OPERATIONAL TESTS BEFORE BEING PLACED IN REGULAR OPERATION.

CROSSING TRACK PLAN
MARIGOLD ROAD
LIVELY GROVE, ILLINOIS

SIGNAL DETAILS
MARISSA, ILLINOIS
TRACKAGE TO SERVE:
PRAIRIE STATE GENERATING CO., LLC.

#FILE# #USERDATE# #TIME# #MODELNAME#

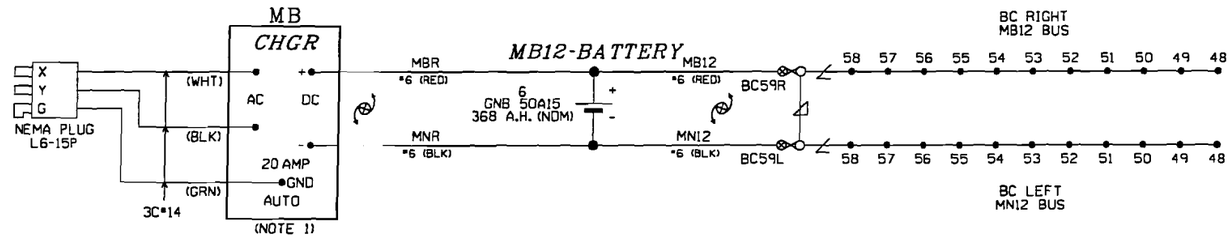

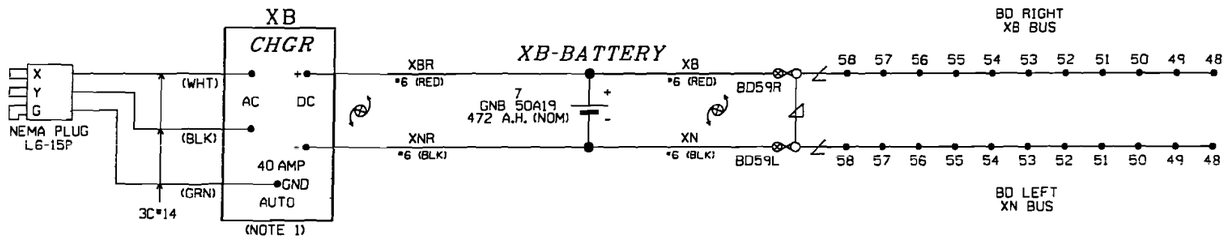

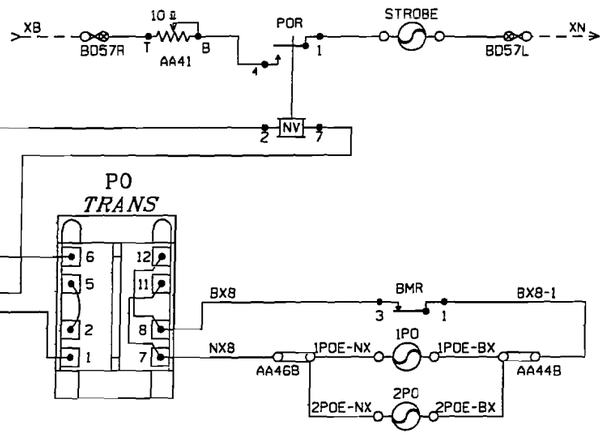

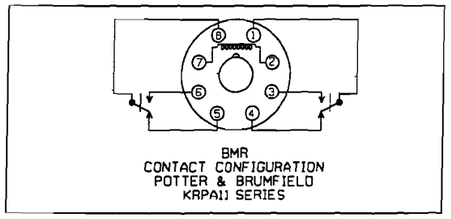

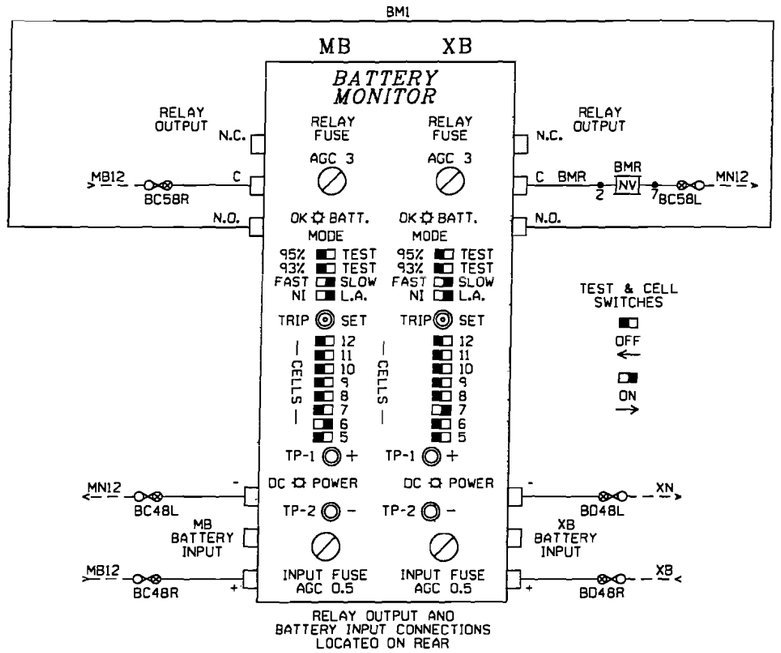

NOTES:

NOTES:

1. USE 240 VOLT SETTING.
2. HARMON CROSSING PROCESSOR HYP-3 INSTRUCTION MANUAL AVAILABLE UPON REQUEST.
3. SEE ATTACHED RECORDER MEMORY MODULE INFORMATION SHEET FOR DATA LOGGING INFORMATION.

SIGNAL EXHIBIT

RailWorks Track Services
4301 BRIDGETON INDUSTRIAL DR.
ST. LOUIS, MISSOURI 63044
(314) 291-2233 FAX (314) 291-2266

DESIGN NINE
11166 TESSON FERRY ROAD
SUITE 100
ST. LOUIS MO, 63123-6966
(314) 729-7600
ENGINEERING SERVICES FOR RAILROADS AND INDUSTRY

REV #	BY	DATE	DESCRIPTION

Drawn By:	JPG	Date:	07/24/2008
Checked By:	RSS/BER	CAD File:	8034-1.dgn
Scale:	NO SCALE	Drawing No.:	2 of 10

THE OPERATION OF THE CIRCUITS AND EQUIPMENT REPRESENTED HEREIN CANNOT BE FULLY CHECKED UNTIL ALL CIRCUITS AND DEVICES ARE CONNECTED TO FORM A COMPLETE SYSTEM, OR AN EFFECTIVE SUBSYSTEM. SUCH SYSTEM OR SUBSYSTEM MUST BE GIVEN COMPLETE CIRCUIT AND OPERATIONAL TESTS BEFORE BEING PLACED IN REGULAR OPERATION.

BATTERY & PO CIRCUITS
MARIGOLD ROAD
LIVELY GROVE, ILLINOIS

SIGNAL DETAILS
MARISSA, ILLINOIS
TRACKAGE TO SERVE:
PRAIRIE STATE GENERATING CO., LLC.

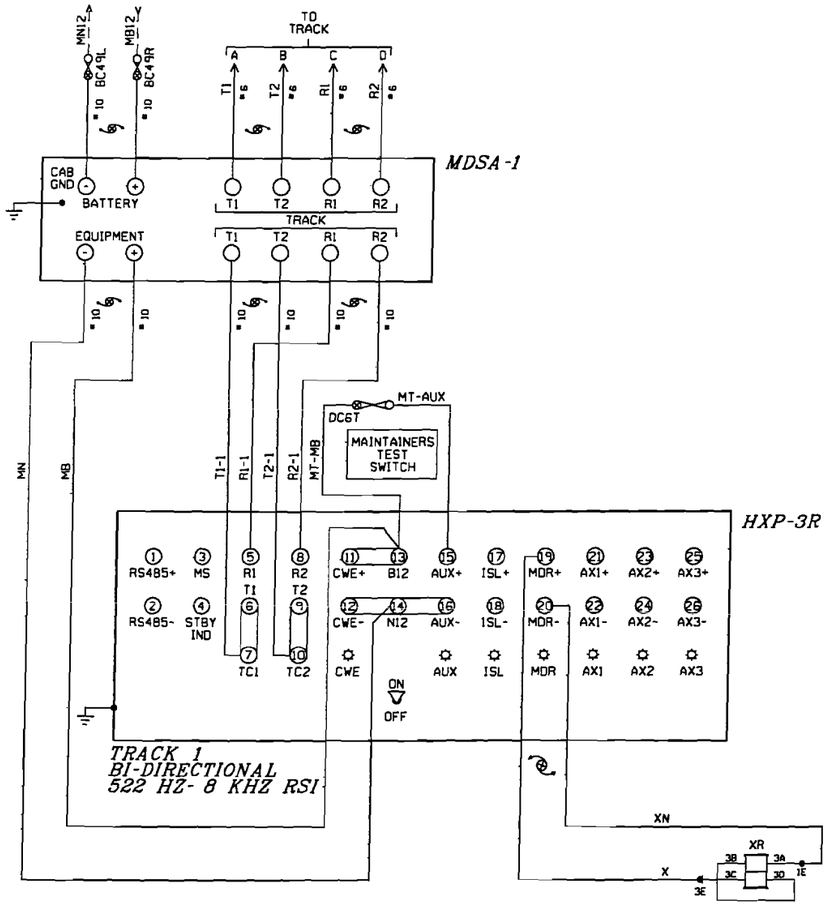

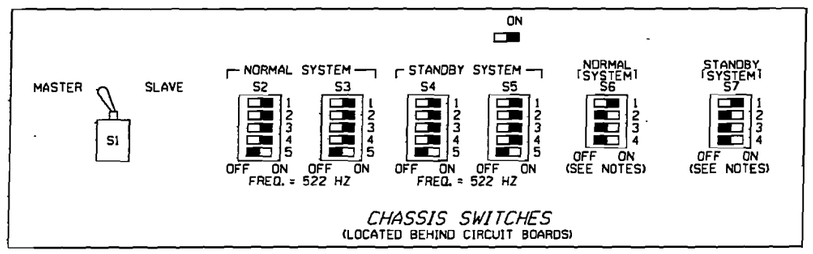

NOTES FOR S6 AND S7:

1) ACTUATOR 1 SELECTS NORMAL APPROACH WHEN SET TO ON POSITION.
2) WITH ACTUATOR 1 IN OFF POSITION ACTUATOR 2 SELECTS SHORT APPROACH WHEN OFF AND SELECTS VERY SHORT WHEN ON.
3) ACTUATOR 3 AND 4 RESERVED FOR FUTURE USE.

PROGRAM INFORMATION

PROGRAM VERSION 41.0 OR LATER

* = FIELD ADJUSTMENT TO BE MADE ACCORDING TO THE HXP-3 INSTRUCTION MANUAL.

HXP-3R ADJUSTMENTS

NO.	ADJUSTMENT NAME	TRACK 1
1	APP. LENGTH	499'
2	WARNING TIME	30 SEC.
3	LIA	*
4	TC	*
5	MD RESTART	0

OPTION ADJUSTMENTS

NO.	ABBREVIATION	TRACK 1
1	TK-ENA	UP
2	TK FQ	522 HZ
3	CW/MD	C
4	UNI-BI	b (BI)
5	NBS-C	*
6	CWEWT	DL (80 SEC.)
7	LOS	DL (16 SEC.)
8	IJ-LOS	DL (5 SEC.)
9	BC	147 *
10	P-COMP	*
11	AX1	NA
12	AX2	NA
13	AX3	NA
17	MDR-AX	"dn"
	OF-TK 1 OR 2	DL (0)
	CJ-LOS	DL (0)
	PJ-DET	DL (15)
	PJ-RX	DL (15)
18	MD-TMR	DL (10)
19	MIN-WT	DL (0)
20	FS-DET	"dn"
	FS-RX	DL (0)
	FS-TM	DL (10)
21	POS-ST	"dn"
	POS-RX	DL (0)
	POS-TM	DL (0)
22	AR-TMR	"dn"
	AR-RX	DL (0)
	AR-TM	DL (10)
47	ATO-RX	UP
48	PF-ENA	"dn"

AX ADJUSTMENTS

NO.	ABBREVIATION	AX 1	AX 2	AX 3
1	TK-ASN			
2	OF-TKI			
3	WT			
4	MD-RST			
5	CW/MD			
6	CJ-LOS			
7	PJ-DET			
8	PJ-RX			
9	POS-ST			

CIRCUIT BOARD INFORMATION

SWITCH OR JUMPER	TRACK 1
RSI FAULT JUMPER	0
RSI-LOS JUMPER	1
TLM W1 JUMPER	PINS 1-2
TLM W2 JUMPER	PINS 1-2
TLM W3 JUMPER	PINS 2-3
TLM MINUTE TIMEOUT	5 MIN
RYD CW/MD	CW
TLM STANDBY/AUTO/NORMAL	AUTO

NOTE: DL= DEFAULT LEVEL
NA= NON APPLICABLE

SIGNAL EXHIBIT

RailWorks Track Services
4301 BRIDGETON INDUSTRIAL DR.
ST. LOUIS, MISSOURI 63044
(314) 291-2233 FAX (314) 291-2266

DESIGN NINE
11166 TESSON FERRY ROAD
SUITE 100
ST. LOUIS MO, 63123-6966
(314) 729-7600
ENGINEERING SERVICES FOR RAILROADS AND INDUSTRY

REV #	BY	DATE	DESCRIPTION

Drawn By:	JPG	Date:	07/24/2008
Checked By:	RSS/BER	CAD File:	8034-1.dgn
Scale:	NO SCALE	Drawing No.:	3 of 10

THE OPERATION OF THE CIRCUITS AND EQUIPMENT REPRESENTED HEREIN CANNOT BE FULLY CHECKED UNTIL ALL CIRCUITS AND DEVICES ARE CONNECTED TO FORM A COMPLETE SYSTEM, OR AN EFFECTIVE SUBSYSTEM. SUCH SYSTEM OR SUBSYSTEM MUST BE GIVEN COMPLETE CIRCUIT AND OPERATIONAL TESTS BEFORE BEING PLACED IN REGULAR OPERATION.

HXP-3R CIRCUITS
MARIGOLD ROAD
LIVELY GROVE, ILLINOIS

SIGNAL DETAILS
MARISSA, ILLINOIS
TRACKAGE TO SERVE:
PRAIRIE STATE GENERATING CO., LLC.

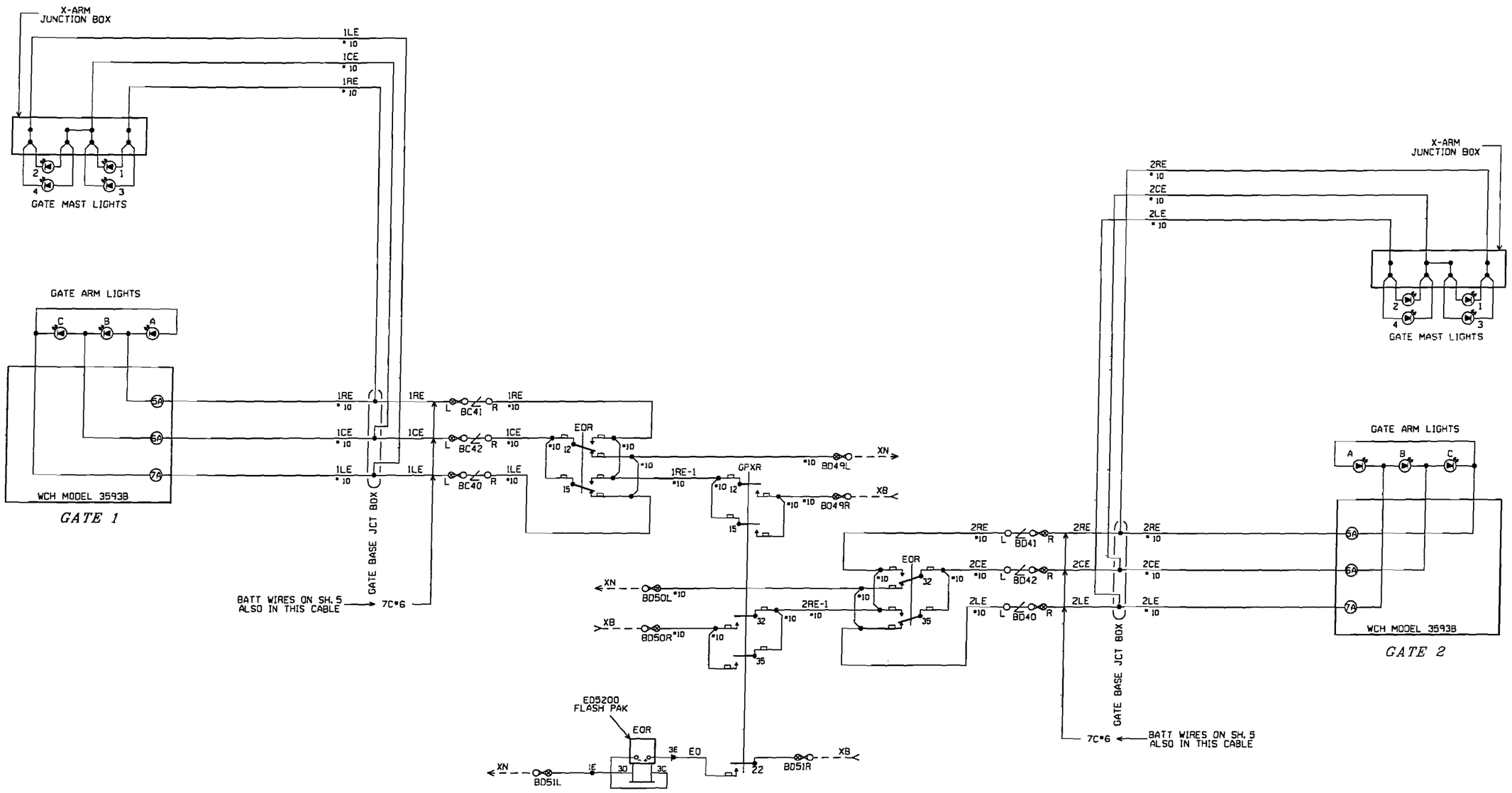

NOTES:

1. = LED SIGNAL LAMP WITH 8.5 TO 16 VOLT WORKING VOLTAGE.

SIGNAL EXHIBIT

RailWorks Track Services
4301 BRIDGETON INDUSTRIAL DR.
ST. LOUIS, MISSOURI 63044
(314) 291-2233 FAX (314) 291-2266

DESIGN NINE
11166 TESSON FERRY ROAD
SUITE 100
ST. LOUIS MO, 63123-6966
(314) 729-7600
ENGINEERING SERVICES FOR RAILROADS AND INDUSTRY

REV #	BY	DATE	DESCRIPTION

Drawn By:	JPG	Date:	07/24/2008
Checked By:	RSS/BER	CAD File:	8034-1.dgn
Scale:	NO SCALE	Drawing No.:	4 of 10

THE OPERATION OF THE CIRCUITS AND EQUIPMENT REPRESENTED HEREIN CANNOT BE FULLY CHECKED UNTIL ALL CIRCUITS AND DEVICES ARE CONNECTED TO FORM A COMPLETE SYSTEM, OR AN EFFECTIVE SUBSYSTEM. SUCH SYSTEM OR SUBSYSTEM MUST BE GIVEN COMPLETE CIRCUIT AND OPERATIONAL TESTS BEFORE BEING PLACED IN REGULAR OPERATION.

CROSSING LAMP CIRCUITS
MARIGOLD ROAD
LIVELY GROVE, ILLINOIS

SIGNAL DETAILS
MARISSA, ILLINOIS
TRACKAGE TO SERVE:
PRAIRIE STATE GENERATING CO., LLC.

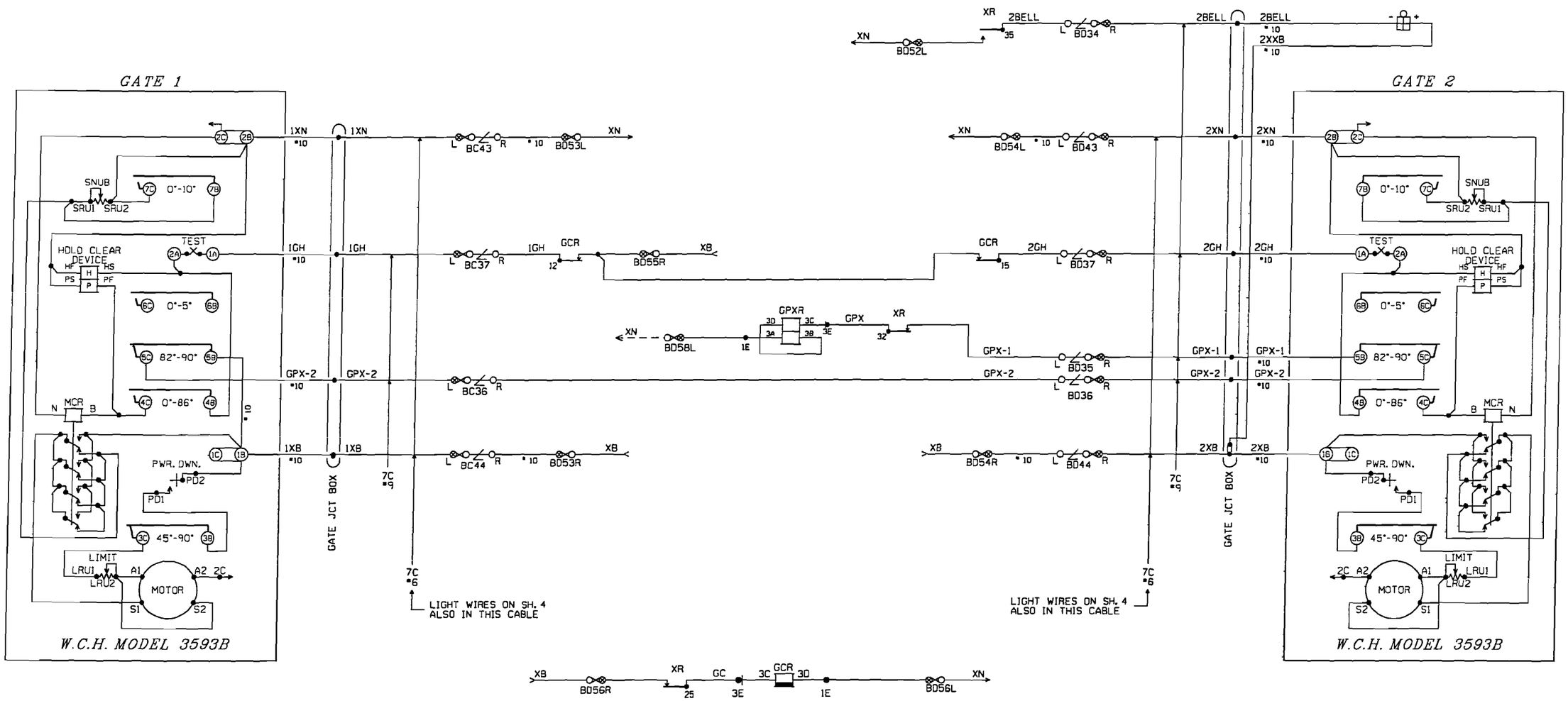

NOTES:
1. MAINTENANCE SWITCH NOT SHOWN.
2. GATE MECHS SHOWN IN CLEAR POSITION.

SIGNAL EXHIBIT

RailWorks Track Services
4301 BRIDGETON INDUSTRIAL DR.
ST. LOUIS, MISSOURI 63044
(314) 291-2233 FAX (314) 291-2266

REV #	BY	DATE	DESCRIPTION

DESIGN NINE
11166 TESSON FERRY ROAD
SUITE 100
ST. LOUIS MO, 63123-6966
(314) 729-7600
ENGINEERING SERVICES FOR RAILROADS AND INDUSTRY

Drawn By:	JPG	Date:	07/24/2008
Checked By:	RSS/BER	CAD File:	8034-1.dgn
Scale:	NO SCALE	Drawing No.:	5 of 10

THE OPERATION OF THE CIRCUITS AND EQUIPMENT REPRESENTED HEREIN CANNOT BE FULLY CHECKED UNTIL ALL CIRCUITS AND DEVICES ARE CONNECTED TO FORM A COMPLETE SYSTEM, OR AN EFFECTIVE SUBSYSTEM. SUCH SYSTEM OR SUBSYSTEM MUST BE GIVEN COMPLETE CIRCUIT AND OPERATIONAL TESTS BEFORE BEING PLACED IN REGULAR OPERATION.

GATE MECHANISMS
MARIGOLD ROAD
LIVELY GROVE, ILLINOIS

SIGNAL DETAILS
MARISSA, ILLINOIS
TRACKAGE TO SERVE:
PRAIRIE STATE GENERATING CO., LLC.

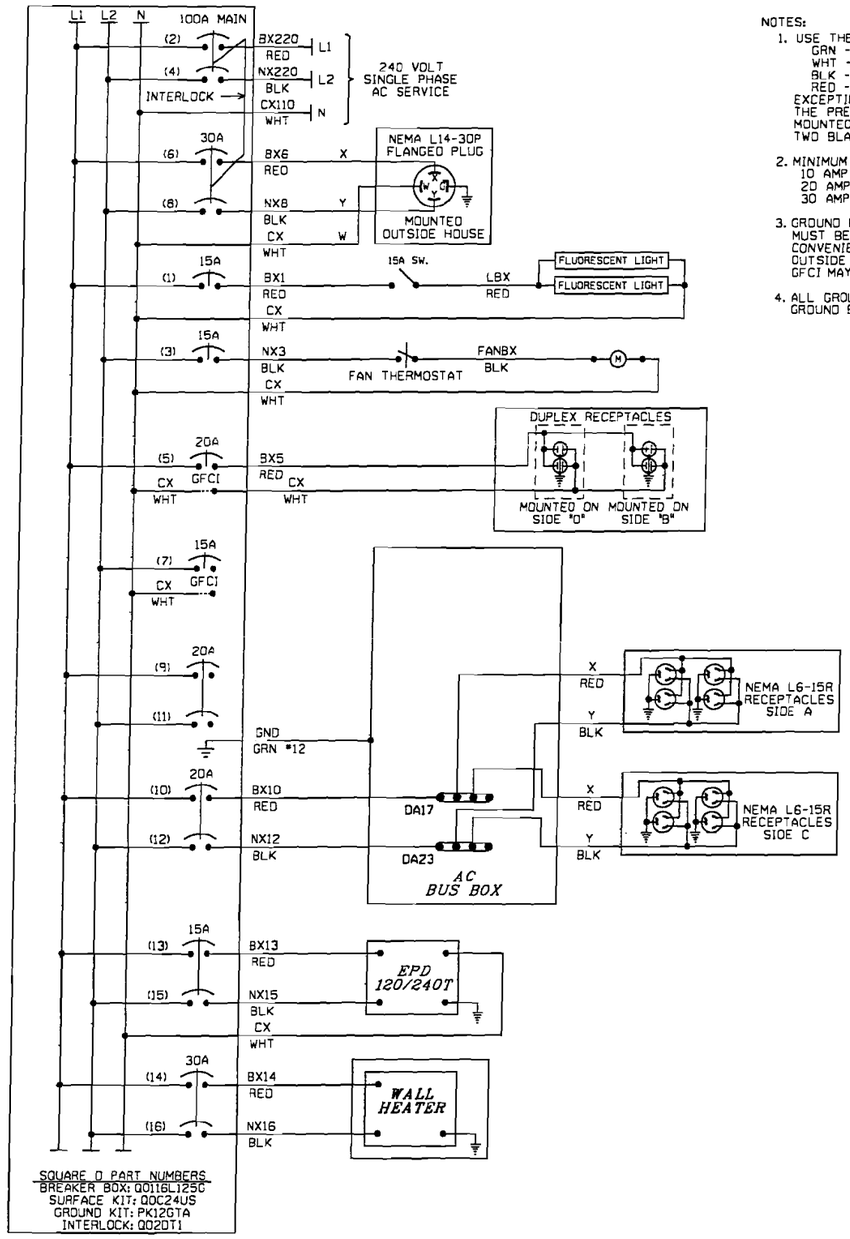

NOTES:

1. USE THE FOLLOWING COLOR CODE:
   GRN - GREEN - SAFETY EQUIPMENT GROUND
   WHT - WHITE - CX110 (NEUTRAL)
   BLK - BLACK - NX220 (L2)
   RED - RED - BX220 (L1)
   EXCEPTIONS TO THE ABOVE COLOR CODE ARE THE PRE-WIRED, SEALED ARRESTOR UNITS MOUNTED ON THE BREAKER BOX WHICH HAVE TWO BLACK AND ONE WHITE WIRE EACH.
2. MINIMUM WIRE SIZE
   10 AMP - NO. 14 AWG THHN OR THWN SOLID
   20 AMP - NO. 12 AWG THHN OR THWN SOLID
   30 AMP - NO. 10 AWG THHN OR THWN SOLID
3. GROUND FAULT INTERRUPT (GFCI) MUST BE USED ON ALL CIRCUITS SERVING CONVENIENCE OUTLETS AND ANY EQUIPMENT OUTSIDE THE BUNGALOW. RECEPTACLE MOUNTED GFCI MAY BE USED INSTEAD OF BREAKER TYPE.
4. ALL GROUND WIRES RUN TO BREAKER BOX GROUND BUS

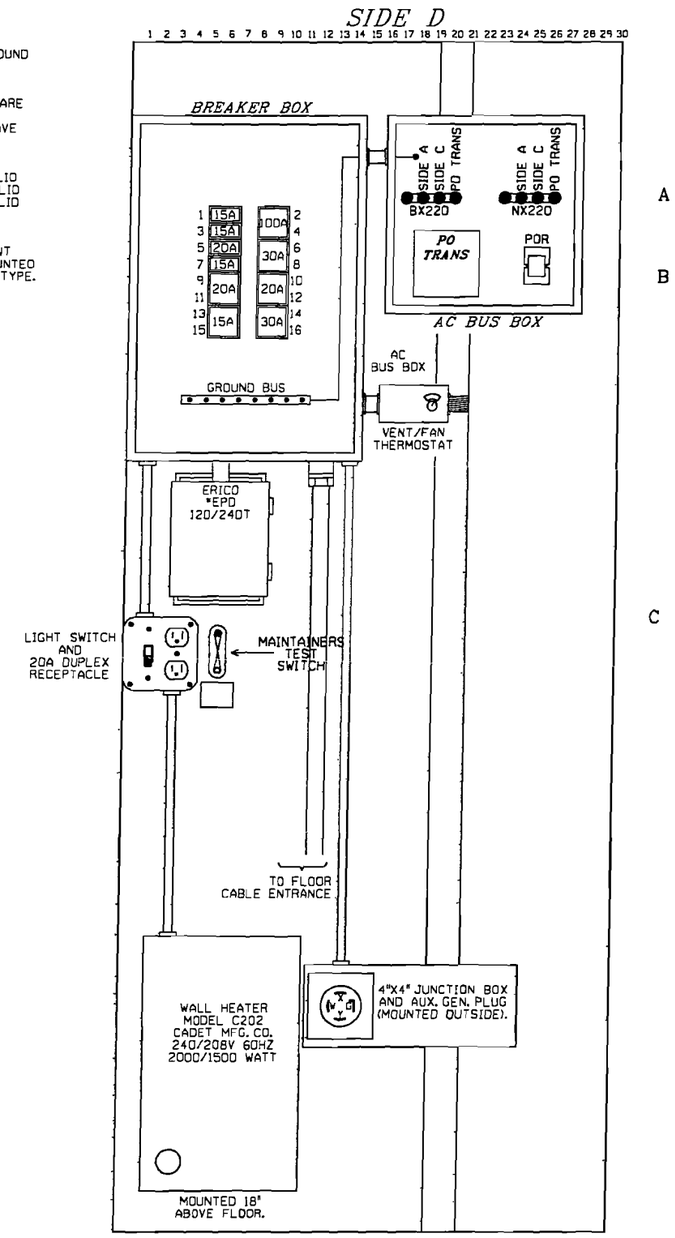

SIGNAL EXHIBIT

RailWorks Track Services
4301 BRIDGETON INDUSTRIAL DR.
ST. LOUIS, MISSOURI 63044
(314) 291-2233 FAX (314) 291-2266

REV #	BY	DATE	DESCRIPTION

DESIGN NINE
11166 TESSON FERRY ROAD
SUITE 100
ST. LOUIS MO, 63123-6966
(314) 729-7600
ENGINEERING SERVICES FOR RAILROADS AND INDUSTRY

Drawn By:	JPG	Date:	07/24/2008
Checked By:	RSS/BER	CAD File:	8034-1.dgn
Scale:	NO SCALE	Drawing No.:	6 of 10

THE OPERATION OF THE CIRCUITS AND EQUIPMENT REPRESENTED HEREIN CANNOT BE FULLY CHECKED UNTIL ALL CIRCUITS AND DEVICES ARE CONNECTED TO FORM A COMPLETE SYSTEM, OR AN EFFECTIVE SUBSYSTEM. SUCH SYSTEM OR SUBSYSTEM MUST BE GIVEN COMPLETE CIRCUIT AND OPERATIONAL TESTS BEFORE BEING PLACED IN REGULAR OPERATION.

AC POWER DISTRIBUTION
MARIGOLD ROAD
LIVELY GROVE, ILLINOIS

SIGNAL DETAILS
MARISSA, ILLINOIS
TRACKAGE TO SERVE:
PRAIRIE STATE GENERATING CO., LLC.

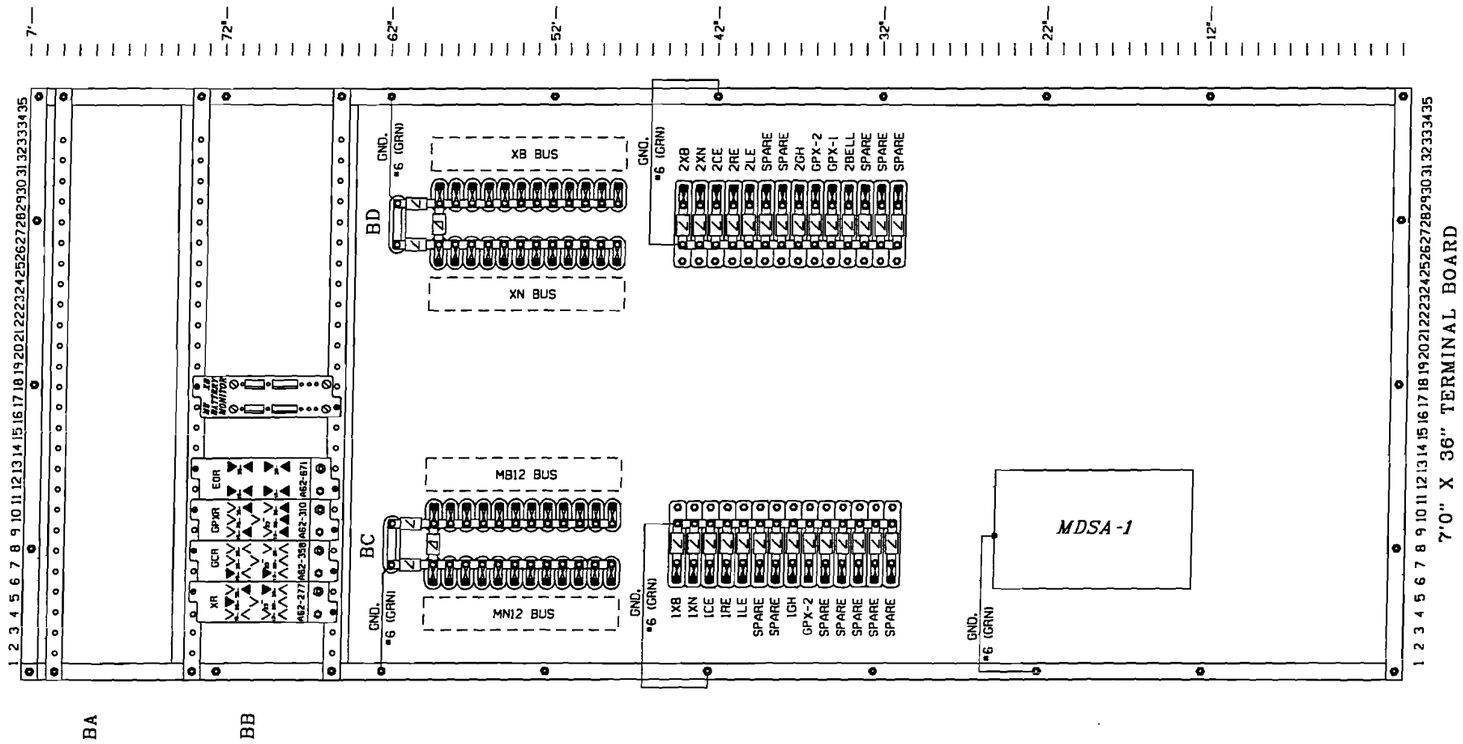

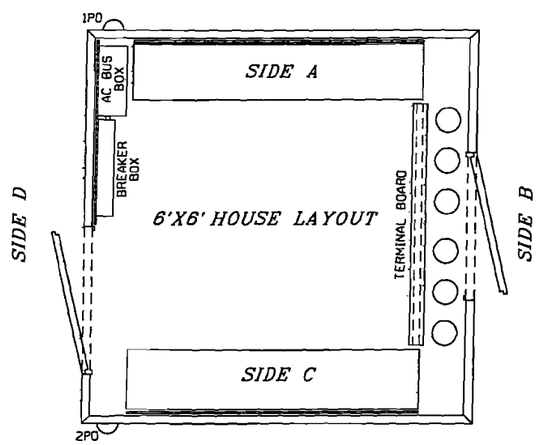

BATTERY BUS DETAILS

ROW BC

MN12 BUS (LEFT)		MB12 BUS (RIGHT)
MB BATT(-)	59	MB BATT(+)
BMR 7	58	MB BMON C
	57	
	56	
	55	
	54	
	53	
	52	
	51	
	50	
MOSA-1 BATT(-)	49	MOSA-1 BATT(+)
MB BMON (-)	48	MB BMON (+)

ROW BD

XN BUS (LEFT)		XB BUS (RIGHT)
XB BATT(-)	59	XB BATT(+)
GPXR 1E	58	
STROBE (-)	57	AA41T
	56	XR 26
	55	GCR 13
BD43L	54	BD44L
BC43R	53	BC44R
XR 34	52	
EOR 1E	51	GPXR 22
EOR 31	50	GPXR 31
EOR 11	49	GPXR 11
XB BMON (-)	48	XB BMON (+)

SIGNAL EXHIBIT

RailWorks Track Services
4301 BRIDGETON INDUSTRIAL DR.
ST. LOUIS, MISSOURI 63044
(314) 291-2233 FAX (314) 291-2266

DESIGN NINE
11166 TESSON FERRY ROAD
SUITE 100
ST. LOUIS MO, 63123-6966
(314) 729-7600
ENGINEERING SERVICES FOR RAILROADS AND INDUSTRY

REV #	BY	DATE	DESCRIPTION

Drawn By:	JPG	Date:	07/24/2008
Checked By:	RSS/BER	CAD File:	8034-1.dgn
Scale:	NO SCALE	Drawing No.:	7 of 10

THE OPERATION OF THE CIRCUITS AND EQUIPMENT REPRESENTED HEREIN CANNOT BE FULLY CHECKED UNTIL ALL CIRCUITS AND DEVICES ARE CONNECTED TO FORM A COMPLETE SYSTEM, OR AN EFFECTIVE SUBSYSTEM. SUCH SYSTEM OR SUBSYSTEM MUST BE GIVEN COMPLETE CIRCUIT AND OPERATIONAL TESTS BEFORE BEING PLACED IN REGULAR OPERATION.

TERMINAL BOARD
MARIGOLD ROAD
LIVELY GROVE, ILLINOIS

SIGNAL DETAILS
MARISSA, ILLINOIS
TRACKAGE TO SERVE:
PRAIRIE STATE GENERATING CO., LLC.

#FILES #USERDATES #TIMES #MODELINNES

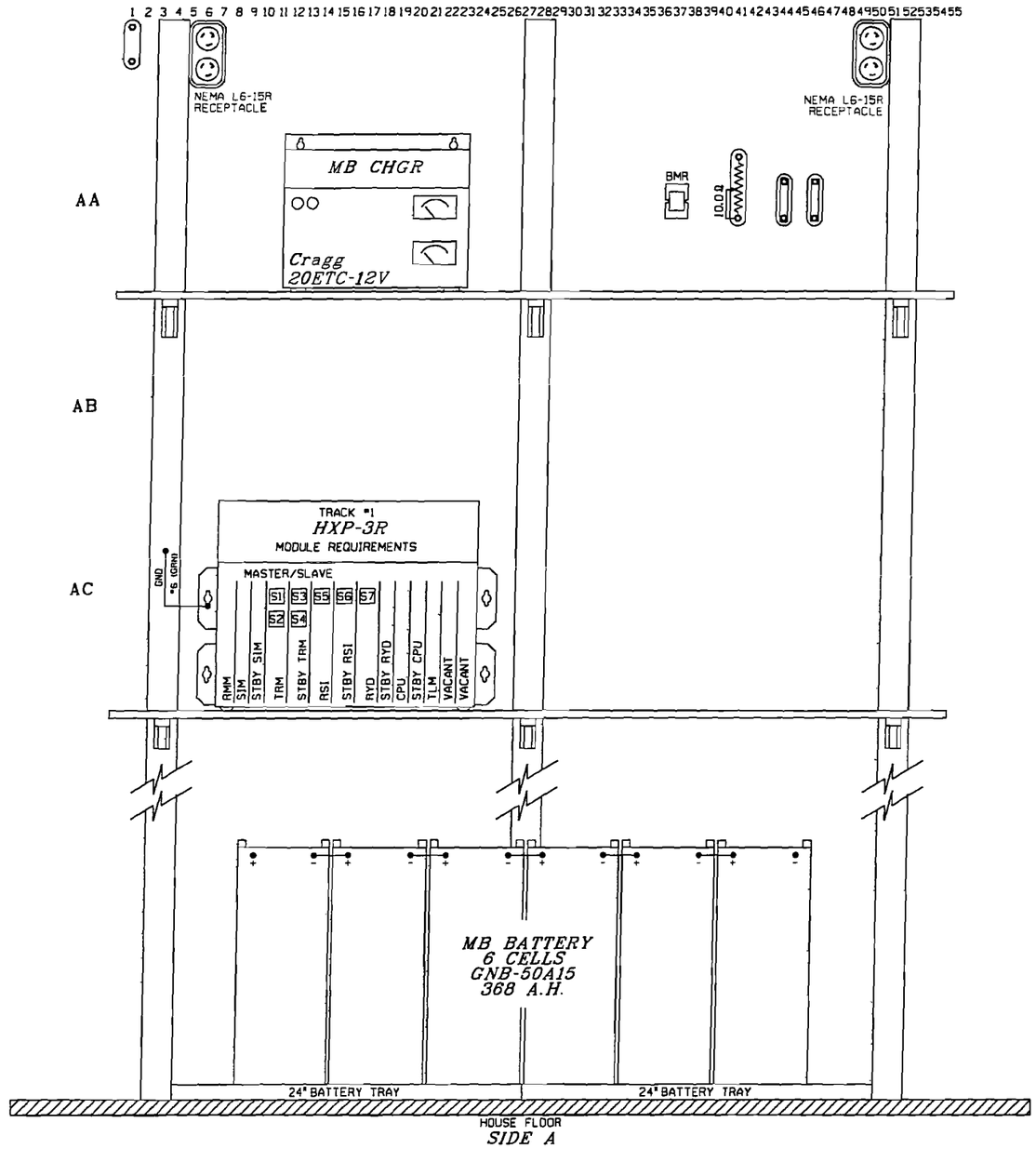

SIGNAL EXHIBIT

RailWorks Track Services
4301 BRIDGETON INDUSTRIAL DR.
ST. LOUIS, MISSOURI 63044
(314) 291-2233 FAX (314) 291-2266

DESIGN NINE
11166 TESSON FERRY ROAD
SUITE 100
ST. LOUIS MO, 63123-6966
(314) 729-7600
ENGINEERING SERVICES FOR RAILROADS AND INDUSTRY

REV #	BY	DATE	DESCRIPTION

Drawn By:	JPG	Date:	07/24/2008
Checked By:	RSS/BER	CAD File:	8034-1.dgn
Scale:	NO SCALE	Drawing No.:	8 of 10

THE OPERATION OF THE CIRCUITS AND EQUIPMENT REPRESENTED HEREIN CANNOT BE FULLY CHECKED UNTIL ALL CIRCUITS AND DEVICES ARE CONNECTED TO FORM A COMPLETE SYSTEM, OR AN EFFECTIVE SUBSYSTEM. SUCH SYSTEM OR SUBSYSTEM MUST BE GIVEN COMPLETE CIRCUIT AND OPERATIONAL TESTS BEFORE BEING PLACED IN REGULAR OPERATION.

SIDE A HOUSE LAYOUT
MARIGOLD ROAD
LIVELY GROVE, ILLINOIS

SIGNAL DETAILS
MARISSA, ILLINOIS
TRACKAGE TO SERVE:
PRAIRIE STATE GENERATING CO., LLC.

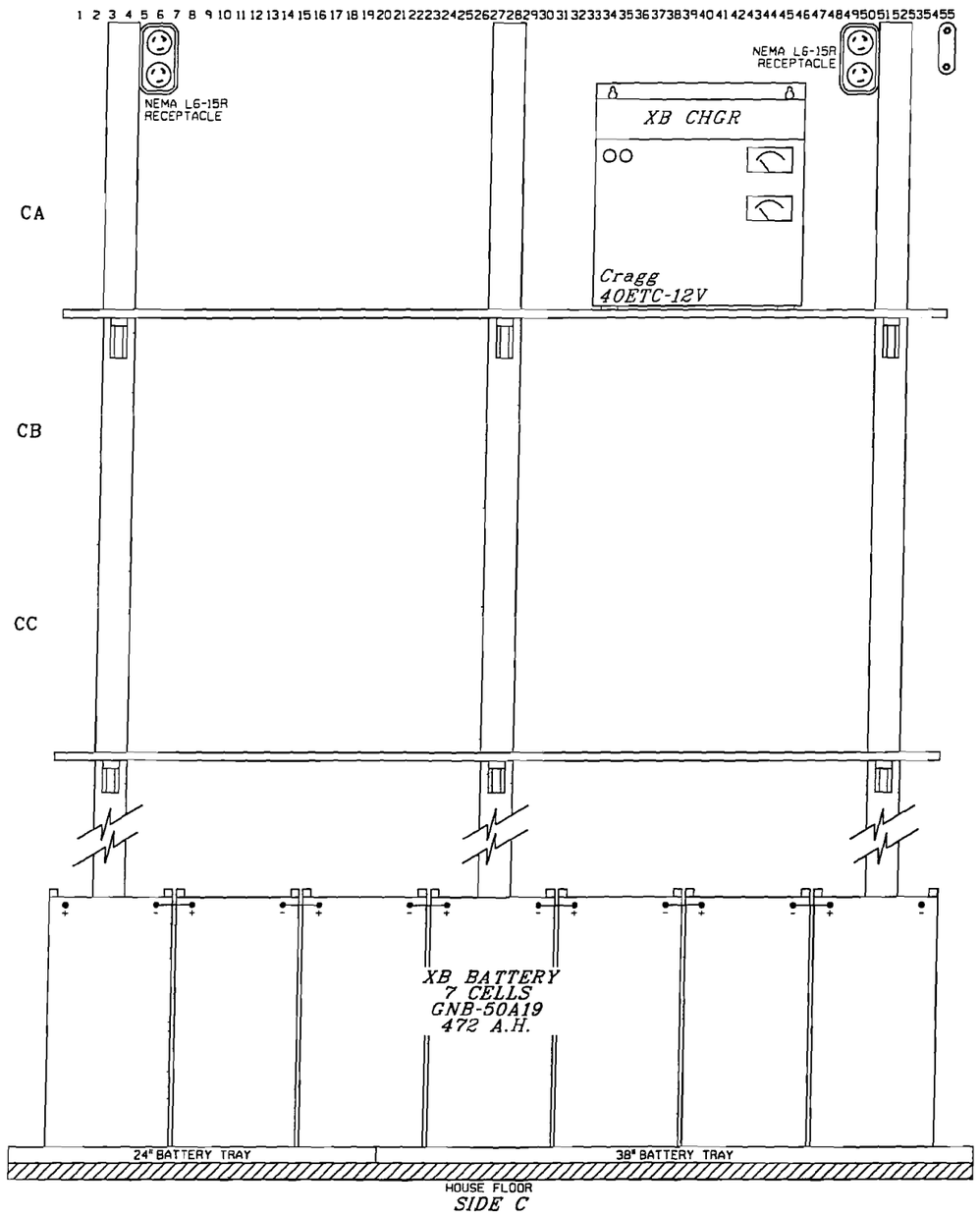

SIDE C

SIGNAL EXHIBIT

RailWorks Track Services
4301 BRIDGETON INDUSTRIAL DR.
ST. LOUIS, MISSOURI 63044
(314) 291-2233 FAX (314) 291-2266

REV #	BY	DATE	DESCRIPTION

THE OPERATION OF THE CIRCUITS AND EQUIPMENT REPRESENTED HEREIN CANNOT BE FULLY CHECKED UNTIL ALL CIRCUITS AND DEVICES ARE CONNECTED TO FORM A COMPLETE SYSTEM, OR AN EFFECTIVE SUBSYSTEM. SUCH SYSTEM OR SUBSYSTEM MUST BE GIVEN COMPLETE CIRCUIT AND OPERATIONAL TESTS BEFORE BEING PLACED IN REGULAR OPERATION.

SIDE C HOUSE LAYOUT
MARIGOLD ROAD
LIVELY GROVE, ILLINOIS

DESIGN NINE
11166 TESSON FERRY ROAD
SUITE 100
ST. LOUIS MO, 63123-6966
(314) 729-7600
ENGINEERING SERVICES FOR RAILROADS AND INDUSTRY

Drawn By:	JPG	Date:	07/24/2008
Checked By:	RSS/BER	CAD File:	8034-1.dgn
Scale:	NO SCALE	Drawing No.:	9 of 10

SIGNAL DETAILS
MARISSA, ILLINOIS
TRACKAGE TO SERVE:
PRAIRIE STATE GENERATING CO., LLC.

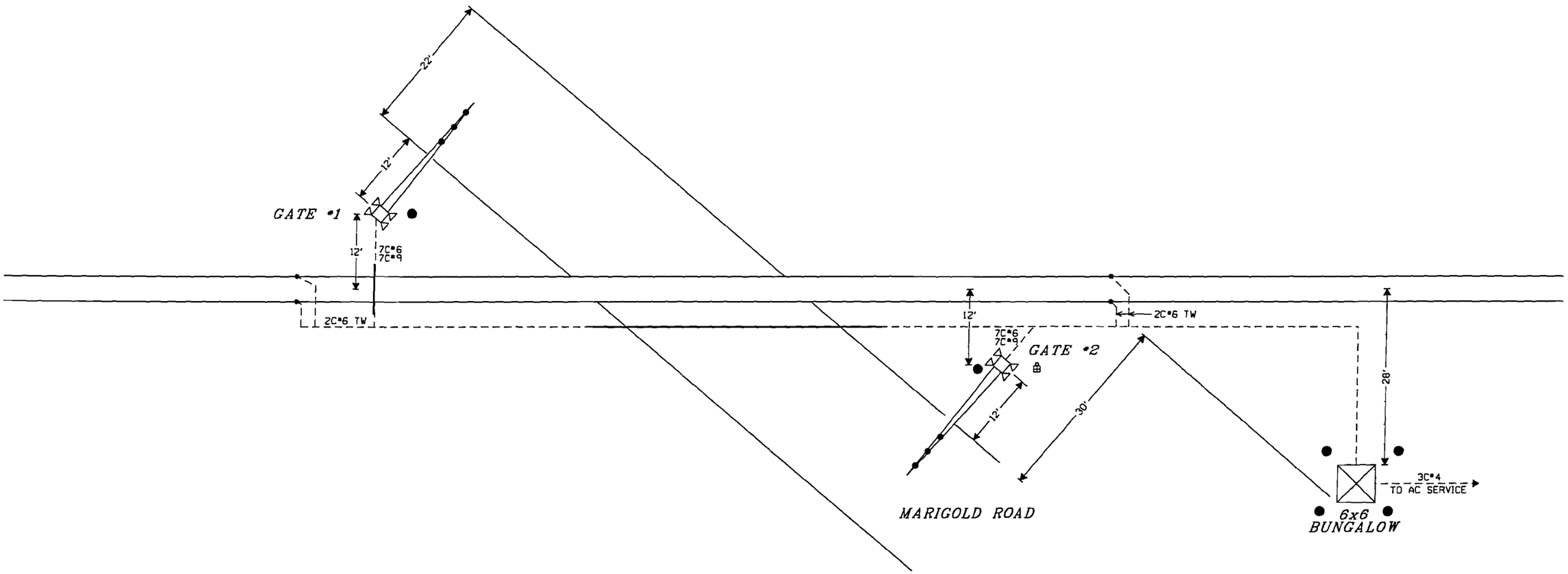

LEGEND:

- 4" RIGID CONDUIT
- UNDERGROUND CABLE
- GROUND ROD POINT

SIGNAL EXHIBIT

RailWorks Track Services
4301 BRIDGETON INDUSTRIAL DR.
ST. LOUIS, MISSOURI 63044
(314) 291-2233 FAX (314) 291-2266

DESIGN NINE
11166 TESSON FERRY ROAD
SUITE 100
ST. LOUIS MO, 63123-6966
(314) 729-7600
ENGINEERING SERVICES FOR RAILROADS AND INDUSTRY

REV #	BY	DATE	DESCRIPTION

Drawn By:	JPG	Date:	07/24/2008
Checked By:	RSS/BER	CAD File:	8034-1.dgn
Scale:	NO SCALE	Drawing No.:	10 of 10

THE OPERATION OF THE CIRCUITS AND EQUIPMENT REPRESENTED HEREIN CANNOT BE FULLY CHECKED UNTIL ALL CIRCUITS AND DEVICES ARE CONNECTED TO FORM A COMPLETE SYSTEM, OR AN EFFECTIVE SUBSYSTEM. SUCH SYSTEM OR SUBSYSTEM MUST BE GIVEN COMPLETE CIRCUIT AND OPERATIONAL TESTS BEFORE BEING PLACED IN REGULAR OPERATION.

CABLE & FOUNDATION PLAN
MARIGOLD ROAD
LIVELY GROVE, ILLINOIS

SIGNAL DETAILS
MARISSA, ILLINOIS
TRACKAGE TO SERVE:
PRAIRIE STATE GENERATING CO., LLC.

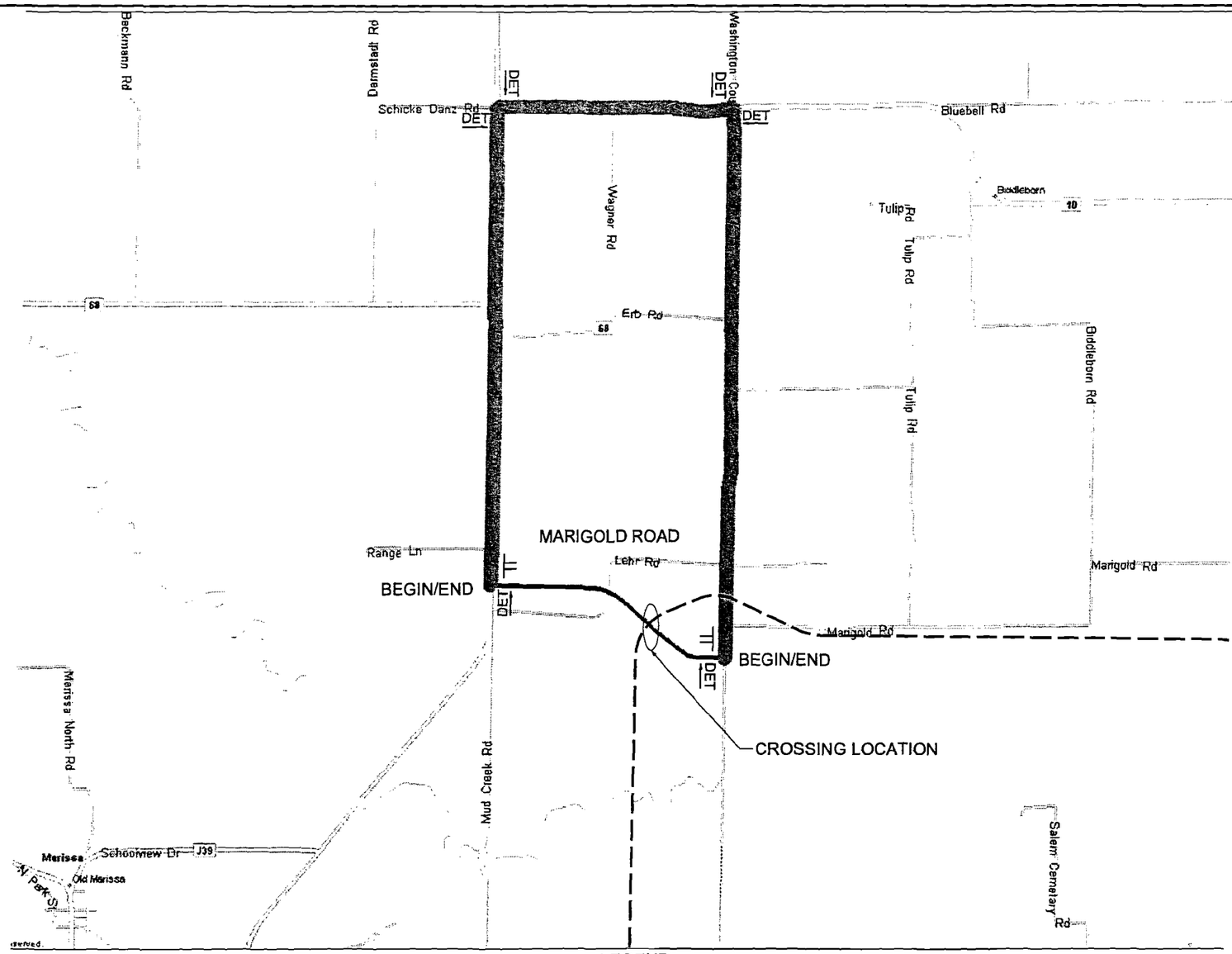

EQUIPMENT

4-6 TYPE III BARRICADE W/ LIGHT & RD CLOSED AHEAD

6 DETOUR —— / ——

NOTE: THE RAIL WORK SHOWN IS NOT TO SCALE AND ONLY SHOWS AN APPROXIMATE CROSSING LOCATIONS

LEGEND

TT TYPE III BARRICADE W/ RD CLOSED AHEAD LOCAL TRAFFIC ONLY W/ EIFF ROAD DETOUR ARROW

DET MARIGOLD ROAD DETOUR

DET MARIGOLD ROAD DETOUR

1 ROAD CLOSED AHEAD

2 DETOUR AHEAD

3 MARIGOLD ROAD CLOSED

MARIGOLD DETOUR MAP

DETOUR EXHIBIT

RailWorks Track Services®
4301 BRIDGETON INDUSTRIAL DR.
ST. LOUIS, MISSOURI 63044
(314) 291-2233 FAX (314) 291-2266

DESIGN NINE
11166 TESSON FERRY ROAD
SUITE 100
ST. LOUIS MO, 63123-6966
(314) 729-7600
ENGINEERING SERVICES FOR RAILROADS AND INDUSTRY

REV #	BY	DATE	DESCRIPTION

Drawn By:	JPG	Date:	07/28/2008
Checked By:	RSS/BER	CAD File:	8034-1.dgn
Scale:	NO SCALE	Drawing No.:	1 of 1

- ISSUED -
FOR CONSTRUCTION

DETOUR PROPOSAL
HIGHWAY TECHNOLOGIES

MARIGOLD ROAD
MARISSA, ILLINOIS
TRACKAGE TO SERVE:
PRAIRIE STATE GENERATING CO., LLC.

S:\8000\Railworks\Prairie State Energy Campus\Design\08034-1.dgn
JPG 7/30/2008 1:30:54 PM Detail