15
1 EU

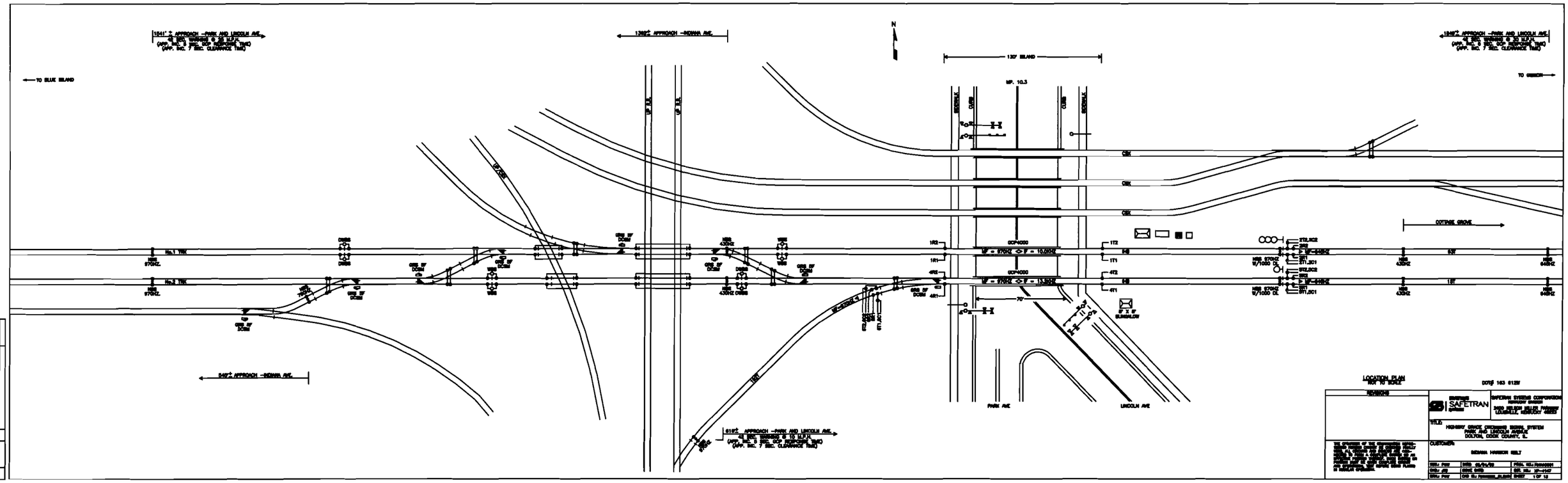

RECEIVED
AUG 27 2008
Illinois Commerce Commission
RAIL SAFETY SECTION

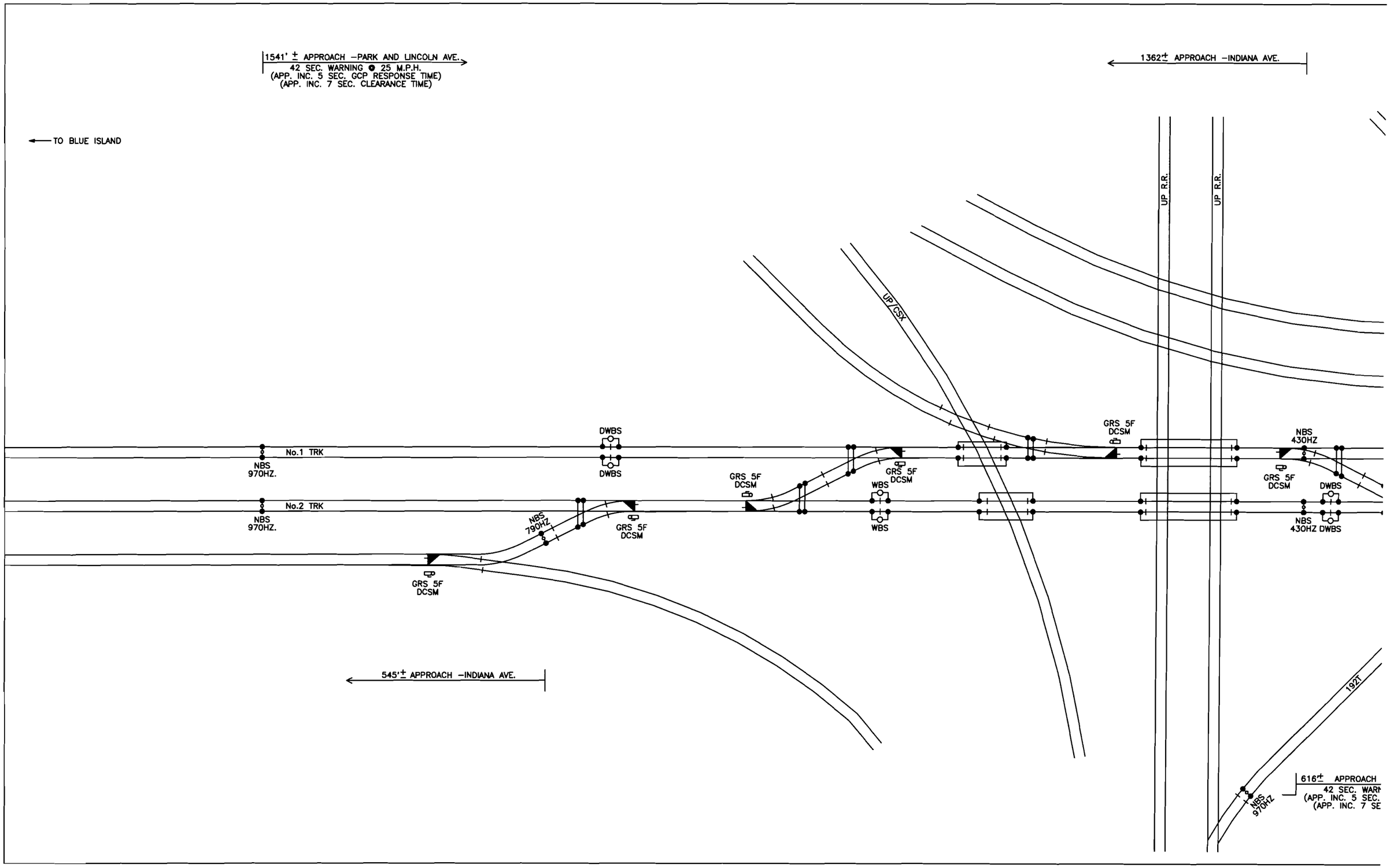
1541' ± APPROACH –PARK AND LINCOLN AVE.
42 SEC. WARNING @ 25 M.P.H.
(APP. INC. 5 SEC. GCP RESPONSE TIME)
(APP. INC. 7 SEC. CLEARANCE TIME)
1362± APPROACH –INDIANA AVE.
TO BLUE ISLAND
UP R.R.
UP R.R.
UP/CSX
No.1 TRK
No.2 TRK
NBS 970HZ.
NBS 970HZ.
DWBS
DWBS
GRS 5F DCSM
GRS 5F DCSM
GRS 5F DCSM
GRS 5F DCSM
GRS 5F DCSM
GRS 5F DCSM
WBS
WBS
NBS 790HZ
NBS 430HZ
NBS 430HZ DWBS
DWBS
545'± APPROACH –INDIANA AVE.
192T
NBS 970HZ
616± APPROACH
42 SEC. WARN
(APP. INC. 5 SEC.
(APP. INC. 7 SE

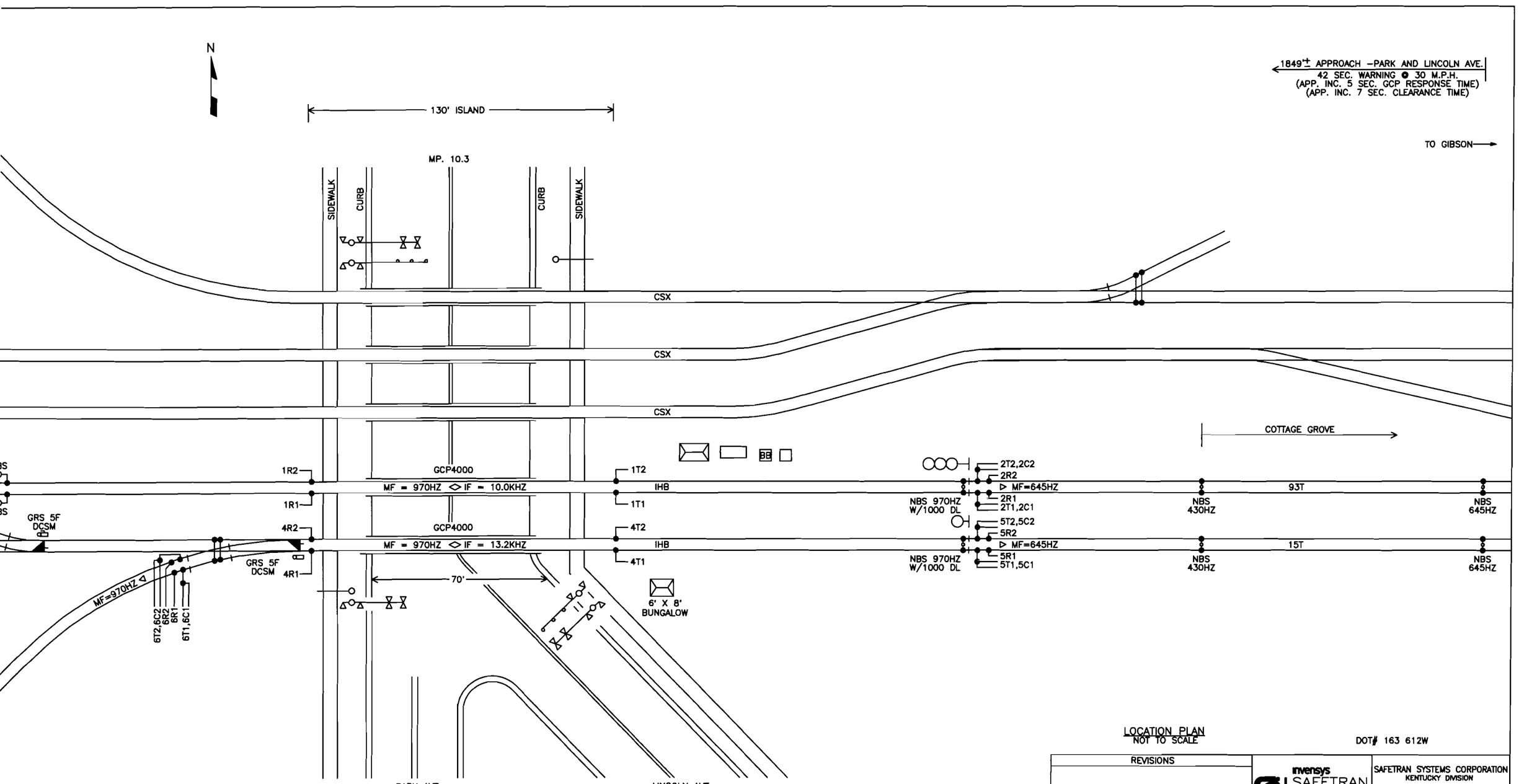

LOCATION PLAN
NOT TO SCALE

DOT# 163 612W

REVISIONS	invensys SAFETRAN systems	SAFETRAN SYSTEMS CORPORATION KENTUCKY DIVISION 2400 NELSON MILLER PARKWAY LOUISVILLE, KENTUCKY 40223	
	TITLE: HIGHWAY GRADE CROSSING SIGNAL SYSTEM PARK AND LINCOLN AVENUE DOLTON, COOK COUNTY, IL		
THE OPERATION OF THE ORGANIZATION REPRESENTED HEREON CANNOT BE CHECKED FINALLY UNTIL ALL CIRCUITS AND DEVICES ARE CONNECTED TO FORM A COMPLETE SYSTEM OR AN EFFECTIVE PORTION THEREOF. SUCH SYSTEM OR PORTION MUST BE GIVEN COMPLETE CIRCUIT AND OPERATIONAL TEST BEFORE BEING PLACED IN REGULAR OPERATION.	CUSTOMER: INDIANA HARBOR BELT		
	DES.: PWW	DATE: 08/04/08	PROJ. NO.: PIHA10001
	CKD.: JTB	ISSUE DATE:	EST. NO.: XP-4147
	DRN.: PWW	CAD ID.: PIHA10001_01.DWG	SHEET 1 OF 13

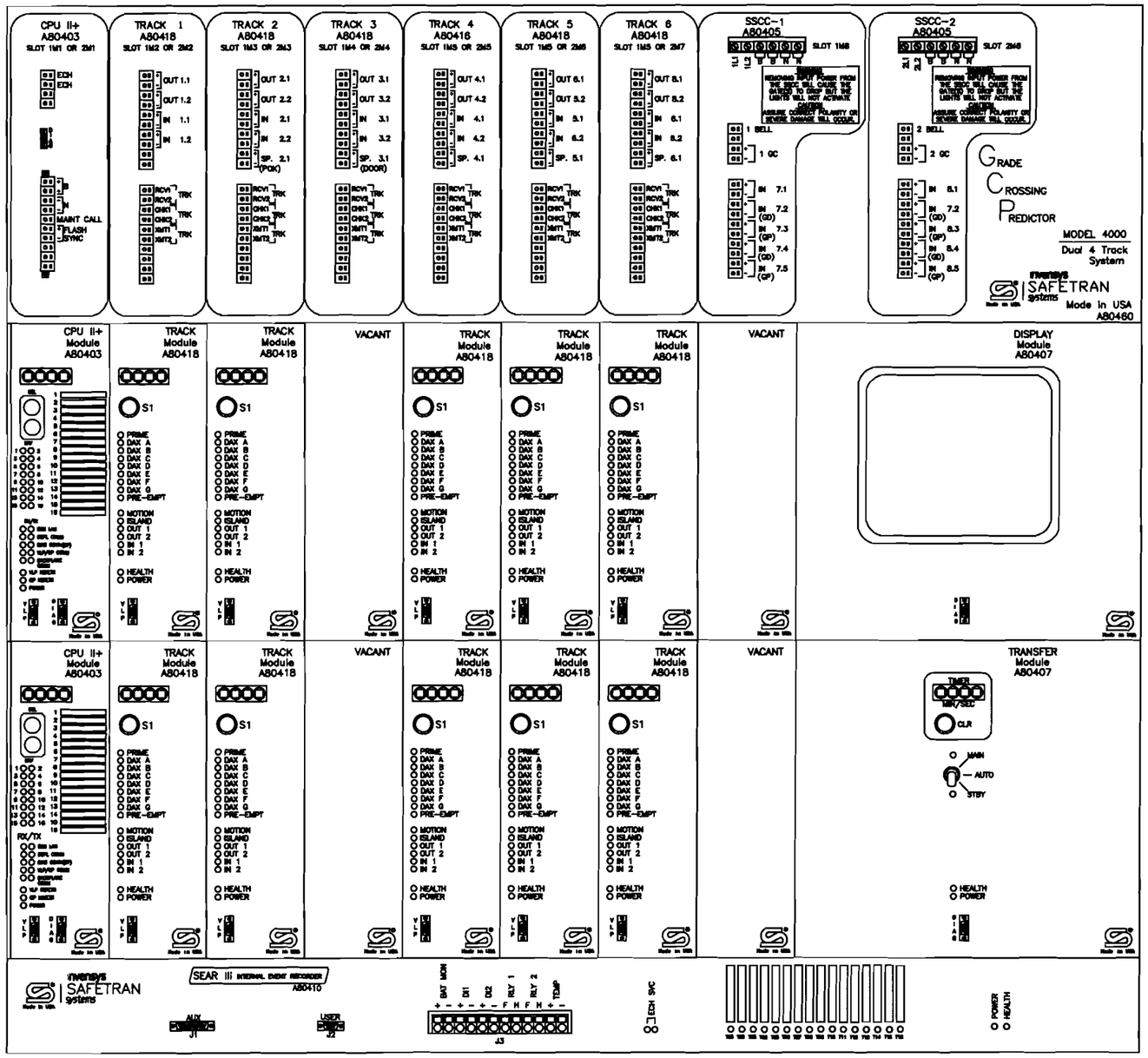

GCP 4000 LAYOUT

REVISIONS

THE OPERATION OF THE ORGANIZATION REPRESENTED HEREON CANNOT BE CHECKED FINALLY UNTIL ALL CIRCUITS AND DEVICES ARE CONNECTED TO FORM A COMPLETE SYSTEM OR AN EFFECTIVE PORTION THEREOF. SUCH SYSTEM OR PORTION MUST BE GIVEN COMPLETE CIRCUIT AND OPERATIONAL TEST BEFORE BEING PLACED IN REGULAR OPERATION.

invensys SAFETRAN systems

SAFETRAN SYSTEMS CORPORATION
KENTUCKY DIVISION
2400 NELSON MILLER PARKWAY
LOUISVILLE, KENTUCKY 40223

TITLE:
HIGHWAY GRADE CROSSING SIGNAL SYSTEM
PARK AND LINCOLN AVENUE
DOLTON, COOK COUNTY, IL

CUSTOMER:
INDIANA HARBOR BELT

DES.: PWW	DATE: 08/04/08	PROJ. NO.: PHIA10001
CKD.: JTB	ISSUE DATE:	EST. NO.: XP-4147
DRN.: PWW	CAD ID.: PHIA10001_02.DWG	SHEET 2 OF 13

Program Report

Location and SIN

DOT Number: 163612W
Milepost Number: 10.3
Site Name: PARK AND LINCOLN AVENUE

SIN: 762010010016

MCF and Template Selection

MCF Name: GCP-T6X-02-1.mcf
MCF Revision: 021
MCFCRC: 6076E435

Template = 2C:2 Bi, 4 Rem

Check Numbers

Office Check No. (DT 4.6.0): 05003400
Office Check Number: 05003400
Config. Check Number: 2E1C501B
(Based on MCF Revision 021)

Program

BASIC: module configuration
Track 1 Slot = Track
Track 2/RIO 1 Slot = Track
Track 3 Slot = Not Used
Track 4 Slot = Track
Track 5/RIO 2 Slot = Track
Track 6/RIO 3 Slot = Track
SSCC-1 Slot = Not Used
SSCC-2 Slot = Not Used
SEAR Used = Yes

BASIC: MS/GCP operation
Track 1 : MS/GCP Operation = Yes
Track 2 : MS/GCP Operation = Yes
Track 4 : MS/GCP Operation = Yes
Track 5 : MS/GCP Operation = Yes
Track 6 : MS/GCP Operation = Yes

BASIC: island operation
Track 1 : Island Used = Internal
Track 2 : Island Used = No
Track 4 : Island Used = Internal
Track 5 : Island Used = No
Track 6 : Island Used = No

BASIC: preemption
Preempt Logic = No

BASIC: radio Dax links
Radio DAX link A Used = No
Radio DAX link B Used = No

BASIC: Vital Comms links
Vital Comms link 1 Used = No
Vital Comms link 2 Used = No

PREDICTORS: track 1
Track 1 : Prime Used = Yes
Track 1 : Dax A Used = No
Track 1 : Dax B Used = No
Track 1 : Dax C Used = No
Track 1 : Dax D Used = No
Track 1 : Dax E Used = No
Track 1 : Dax F Used = No
Track 1 : Dax G Used = No

PREDICTORS: track 2
Track 2 : Prime Used = Yes
Track 2 : Dax A Used = No
Track 2 : Dax B Used = No
Track 2 : Dax C Used = No
Track 2 : Dax D Used = No
Track 2 : Dax E Used = No
Track 2 : Dax F Used = No
Track 2 : Dax G Used = No

PREDICTORS: track 4
Track 4 : Prime Used = Yes
Track 4 : Dax A Used = No
Track 4 : Dax B Used = No
Track 4 : Dax C Used = No
Track 4 : Dax D Used = No
Track 4 : Dax E Used = No
Track 4 : Dax F Used = No
Track 4 : Dax G Used = No

PREDICTORS: track 5
Track 5 : Prime Used = Yes
Track 5 : Dax A Used = No
Track 5 : Dax B Used = No
Track 5 : Dax C Used = No
Track 5 : Dax D Used = No
Track 5 : Dax E Used = No
Track 5 : Dax F Used = No
Track 5 : Dax G Used = No

PREDICTORS: track 6
Track 6 : Prime Used = Yes
Track 6 : Dax A Used = No
Track 6 : Dax B Used = No
Track 6 : Dax C Used = No
Track 6 : Dax D Used = No
Track 6 : Dax E Used = No
Track 6 : Dax F Used = No
Track 6 : Dax G Used = No

GCP: track 1
Track 1 : GCP Freq Category = Standard
Track 1 : GCP Frequency = 970 Hz
Track 1 : Approach Distance = 1541 ft
Track 1 : Uni/Bi/Sim-Bidirnl = Bidirnl
Track 1 : GCP Transmit Level = Medium
Track 1 : Island Connection = Isl 1
Track 1 : Island Distance = 130 ft
Track 1 : Computed Distance = 9999 ft
Track 1 : Linearization Steps = 100

GCP: track 1 enhanced det
Track 1 : Inbound PS Sensitivity = High
Track 1 : Speed Limiting Used = Yes
Track 1 : Outbound False Act Lvl = Normal
Track 1 : Outbound PS Timer = 20 sec
Track 1 : Trailing Switch Logic = On
Track 1 : Post Joint Detn Time = 15 sec
Track 1 : Adv Appr Predn = No
Track 1 : Cancel Pickup Delay = Any Isl

GCP: track 1 prime
Track 1 : Prime Warning Time = 37 sec
Track 1 : Prime Offset Distance = 0 ft
Track 1 : Switch MS EZ Level = 10
Track 1 : Prime MS/GCP Mode = Pred
Track 1 : Prime Pickup Delay = 15 sec
Track 1 : Prime UAX = Not Used

GCP: track 1 pos start
Track 1 : Positive Start = Off
Track 1 : Sudden Shnt Det Used = No
Track 1 : Low EZ Detection Used = No

GCP: track 1 MS Control
Track 1 : MS/GCP Ctrl IP Used = No
Track 1 : MS Sensitivity Level = 0
Track 1 : Compensation Level = 1300
Track 1 : Warn Time-Ballast Comp = High
Track 1 : Low EX Adjustment = 39
Track 1 : Bidirn Dax Passthru = No
Track 1 : False Act on Train Stop = No
Track 1 : EX Limiting Used = Yes
Track 1 : EZ Correction Used = Yes

GCP: track 2
Track 2 : GCP Freq Category = Standard
Track 2 : GCP Frequency = 645 Hz
Track 2 : Approach Distance = 1149 ft
Track 2 : Uni/Bi/Sim-Bidirnl = Unidirnl
Track 2 : GCP Transmit Level = Medium
Track 2 : Island Connection = No Islands
Track 2 : Island Distance = 0 ft
Track 2 : Computed Distance = 9999 ft
Track 2 : Linearization Steps = 100

GCP: track 2 enhanced det
Track 2 : Inbound PS Sensitivity = High
Track 2 : Speed Limiting Used = Yes
Track 2 : Outbound False Act Lvl = Normal
Track 2 : Outbound PS Timer = 20 sec
Track 2 : Trailing Switch Logic = On
Track 2 : Post Joint Detn Time = 15 sec
Track 2 : Adv Appr Predn = No
Track 2 : Cancel Pickup Delay = This Isl

GCP: track 2 prime
Track 2 : Prime Warning Time = 37 sec
Track 2 : Prime Offset Distance = 700 ft
Track 2 : Switch MS EZ Level = 0
Track 2 : Pickup Delay Mode = Auto
Track 2 : Prime MS/GCP Mode = Pred
Track 2 : Prime Pickup Delay = 15 sec
Track 2 : Prime UAX = Not Used

GCP: track 2 pos start
Track 2 : Positive Start = Off
Track 2 : Sudden Shnt Det Used = No
Track 2 : Low EZ Detection Used = No

GCP: track 2 MS Control
Track 2 : MS/GCP Ctrl IP Used = No
Track 2 : MS Sensitivity Level = 0
Track 2 : Compensation Level = 1300
Track 2 : Warn Time-Ballast Comp = Low
Track 2 : Low EX Adjustment = 39
Track 2 : Bidirn Dax Passthru = No
Track 2 : False Act on Train Stop = No
Track 2 : EX Limiting Used = Yes
Track 2 : EZ Correction Used = Yes

GCP: track 4
Track 4 : GCP Freq Category = Standard
Track 4 : GCP Frequency = 970 Hz
Track 4 : Approach Distance = 1541 ft
Track 4 : Uni/Bi/Sim-Bidirnl = Bidirnl
Track 4 : GCP Transmit Level = Medium
Track 4 : Island Connection = Isl 4
Track 4 : Island Distance = 130 ft
Track 4 : Computed Distance = 9999 ft
Track 4 : Linearization Steps = 100

GCP: track 4 enhanced det
Track 4 : Inbound PS Sensitivity = High
Track 4 : Speed Limiting Used = Yes
Track 4 : Outbound False Act Lvl = Normal
Track 4 : Outbound PS Timer = 20 sec
Track 4 : Trailing Switch Logic = On
Track 4 : Post Joint Detn Time = 15 sec
Track 4 : Adv Appr Predn = No
Track 4 : Cancel Pickup Delay = This Isl

GCP: track 4 prime
Track 4 : Prime Warning Time = 37 sec
Track 4 : Prime Offset Distance = 0 ft
Track 4 : Switch MS EZ Level = 10
Track 4 : Prime MS/GCP Mode = Pred
Track 4 : Prime Pickup Delay = 15 sec
Track 4 : Prime UAX = Not Used

GCP: track 4 pos start
Track 4 : Positive Start = Off
Track 4 : Sudden Shnt Det Used = No
Track 4 : Low EZ Detection Used = No

GCP: track 4 MS Control
Track 4 : MS/GCP Ctrl IP Used = No
Track 4 : MS Sensitivity Level = 0
Track 4 : Compensation Level = 1300
Track 4 : Warn Time-Ballast Comp = High
Track 4 : Low EX Adjustment = 39
Track 4 : Bidirn Dax Passthru = No
Track 4 : False Act on Train Stop = No
Track 4 : EX Limiting Used = Yes
Track 4 : EZ Correction Used = Yes

GCP: track 5
Track 5 : GCP Freq Category = Standard
Track 5 : GCP Frequency = 645 Hz
Track 5 : Approach Distance = 1149 ft
Track 5 : Uni/Bi/Sim-Bidirnl = Unidirnl
Track 5 : GCP Transmit Level = Medium
Track 5 : Island Connection = No Islands
Track 5 : Island Distance = 0 ft
Track 5 : Computed Distance = 9999 ft
Track 5 : Linearization Steps = 100

GCP: track 5 enhanced det
Track 5 : Inbound PS Sensitivity = High
Track 5 : Speed Limiting Used = Yes
Track 5 : Outbound False Act Lvl = Normal
Track 5 : Outbound PS Timer = 20 sec
Track 5 : Trailing Switch Logic = On
Track 5 : Post Joint Detn Time = 15 sec
Track 5 : Adv Appr Predn = No
Track 5 : Cancel Pickup Delay = This Isl

GCP: track 5 prime
Track 5 : Prime Warning Time = 37 sec
Track 5 : Prime Offset Distance = 700 ft
Track 5 : Switch MS EZ Level = 0
Track 5 : Pickup Delay Mode = Auto
Track 5 : Prime MS/GCP Mode = Pred
Track 5 : Prime Pickup Delay = 15 sec
Track 5 : Prime UAX = Not Used

GCP: track 5 pos start
Track 5 : Positive Start = Off
Track 5 : Sudden Shnt Det Used = No
Track 5 : Low EZ Detection Used = No

GCP: track 5 MS Control
Track 5 : MS/GCP Ctrl IP Used = No
Track 5 : MS Sensitivity Level = 0
Track 5 : Compensation Level = 1300
Track 5 : Warn Time-Ballast Comp = Low
Track 5 : Low EX Adjustment = 39
Track 5 : Bidirn Dax Passthru = No
Track 5 : False Act on Train Stop = No
Track 5 : EX Limiting Used = Yes
Track 5 : EZ Correction Used = Yes

GCP: track 6
Track 6 : GCP Freq Category = Standard
Track 6 : GCP Frequency = 970 Hz
Track 6 : Approach Distance = 616 ft
Track 6 : Uni/Bi/Sim-Bidirnl = Unidirnl
Track 6 : GCP Transmit Level = Medium
Track 6 : Island Connection = Isl 4
Track 6 : Island Distance = 0 ft
Track 6 : Computed Distance = 9999 ft
Track 6 : Linearization Steps = 100

GCP: track 6 enhanced det
Track 6 : Inbound PS Sensitivity = High
Track 6 : Speed Limiting Used = Yes
Track 6 : Outbound False Act Lvl = Normal
Track 6 : Outbound PS Timer = 20 sec
Track 6 : Trailing Switch Logic = On
Track 6 : Post Joint Detn Time = 15 sec
Track 6 : Adv Appr Predn = No
Track 6 : Cancel Pickup Delay = This Isl

GCP: track 6 prime
Track 6 : Prime Warning Time = 37 sec
Track 6 : Prime Offset Distance = 0 ft
Track 6 : Switch MS EZ Level = 0
Track 6 : Pickup Delay Mode = Auto
Track 6 : Prime MS/GCP Mode = Pred
Track 6 : Prime Pickup Delay = 15 sec
Track 6 : Prime UAX = Not Used

GCP: track 6 pos start
Track 6 : Positive Start = Off
Track 6 : Sudden Shnt Det Used = No
Track 6 : Low EZ Detection Used = No

GCP: track 6 MS Control
Track 6 : MS/GCP Ctrl IP Used = No
Track 6 : MS Sensitivity Level = 0
Track 6 : Compensation Level = 1300
Track 6 : Warn Time-Ballast Comp = Low
Track 6 : Low EX Adjustment = 39
Track 6 : Bidirn Dax Passthru = No
Track 6 : False Act on Train Stop = No
Track 6 : EX Limiting Used = Yes
Track 6 : EZ Correction Used = Yes

ISLAND: track 1
Track 1 : Isl Frequency = 10.0 kHz
Track 1 : Pickup Delay (2s +) = 0 sec
Track 1 : Isl Enable IP Used = No

ISLAND: track 4
Track 4 : Isl Frequency = 13.2 kHz
Track 4 : Pickup Delay (2s +) = 0 sec
Track 4 : Isl Enable IP Used = No

AND: track Anding
AND 1 XR Used = Yes
AND 2 Used = No
AND 3 Used = No
AND 4 Used = No
AND 5 Used = No
AND 6 Used = No
AND 7 Used = No
AND 8 Used = No

AND: AND 1 XR
AND 1 XR Track 1 = Prime
AND 1 XR Track 2 = Prime
AND 1 XR Track 4 = Prime
AND 1 XR Track 5 = Prime
AND 1 XR Track 6 = Prime
AND 1 Enable Used = No
AND 1 Wrap Used = No

ADVANCED: MS restart
MS/GCP Restart Used = No

ADVANCED: out of service
OOS Control = Display
OOS Timeout = Yes
OOS Timeout = 1 hrs

ADVANCED: track wrap circuits
Wrap LOS Timer = 5 sec
Track 1 Wrap Used = No
Track 2 Wrap Used = No
Track 4 Wrap Used = No
Track 5 Wrap Used = No
Track 6 Wrap Used = No

ADVANCED: trk 1 overrides
Track 1 : All Predictors Override Used = No

ADVANCED: trk 2 overrides
Track 2 : All Predictors Override Used = No

ADVANCED: trk 4 overrides
Track 4 : All Predictors Override Used = No

ADVANCED: trk 5 overrides
Track 5 : All Predictors Override Used = No

ADVANCED: trk 6 overrides
Track 6 : All Predictors Override Used = No

ADVANCED: OR logic
OR 1 Used = No
OR 2 Used = No
OR 3 Used = No
OR 4 Used = No

ADVANCED: internal I/O 1
Pass Thrus = No
Int.1 Sets = Not Used
Int.1 Set by = Not Used
Int.2 Sets = Not Used
Int.2 Set by = Not Used
Int.3 Sets = Not Used
Int.3 Set by = Not Used
Int.4 Sets = Not Used
Int.4 Set by = Not Used

ADVANCED: internal I/O 2
Int.5 Sets = Not Used
Int.5 Set by = Not Used
Int.6 Sets = Not Used
Int.6 Set by = Not Used
Int.7 Sets = Not Used
Int.7 Set by = Not Used
Int.8 Sets = Not Used
Int.8 Set by = Not Used

ADVANCED: internal I/O 3
Int.9 Sets = Not Used
Int.9 Set by = Not Used
Int.10 Sets = Not Used
Int.10 Set by = Not Used
Int.11 Sets = Not Used
Int.11 Set by = Not Used
Int.12 Sets = Not Used
Int.12 Set by = Not Used

ADVANCED: internal I/O 4
Int.13 Sets = Not Used
Int.13 Set by = Not Used
Int.14 Sets = Not Used
Int.14 Set by = Not Used
Int.15 Sets = Not Used
Int.15 Set by = Not Used
Int.16 Sets = Not Used
Int.16 Set by = Not Used

ADVANCED: site options
Daylight Savings = On
Units = Standard
Maint Call Rpt IP Used = No
Emergency Activate IP = No
EZ/EX Logging = Change
EZ/EX Point Change = 3

OUTPUT: assignment page 1
OUT 1.1 = AND 1 XR
OUT 1.2 = Not Used
OUT 2.1 = Not Used
OUT 2.2 = Not Used
OUT 4.1 = Not Used
OUT 4.2 = Not Used

OUTPUT: assignment page 2
OUT 5.1 = Not Used
OUT 5.2 = Not Used
OUT 6.1 = Not Used
OUT 6.2 = Not Used

INPUT: assignment page 1
IN 1.1 = Not Used
IN 1.2 = Not Used
IN 2.1 = Not Used
IN 2.2 = Not Used
IN 4.1 = Not Used
IN 4.2 = Not Used

INPUT: assignment page 2
IN 5.1 = Not Used
IN 5.2 = Not Used
IN 6.1 = Not Used
IN 6.2 = Not Used

SEAR
SEAR Subnode = 99
DI 1 = Not Used
DI 2 = Not Used
Rly 1 = Not Used
Rly 2 = Not Used

SEAR: inputs
SP 2.1 = POK 1
SP 3.1 = Not Used
SP 4.1 = Not Used
SP 5.1 = Not Used
SP 6.1 = Not Used

SEAR: slot 1-4 inputs
IN 1.1 = Not Used
IN 1.2 = Not Used
IN 2.1 = Not Used
IN 2.2 = Not Used
IN 3.1 = Not Used
IN 3.2 = Not Used
IN 4.1 = Not Used
IN 4.2 = Not Used

SEAR: inputs slot 5
IN 5.1 = Not Used
IN 5.2 = Not Used

SEAR: inputs slot 6
IN 6.1 = Not Used
IN 6.2 = Not Used

SEAR: slot 7-8 inputs
IN 7.1 = Not Used
IN 7.2 = Not Used
IN 7.3 = Not Used
IN 7.4 = Not Used
IN 7.5 = Not Used
IN 8.1 = Not Used
IN 8.2 = Not Used
IN 8.3 = Not Used
IN 8.4 = Not Used
IN 8.5 = Not Used

SITE: programming
Radio Subnode = 1
Field Password = Off
Low Battery Enabled = Off

Configuration Package File

Filename: 163612W.pac
Path: G:\Engineer\BJWING\GCP 4000 Program\IHB\PIHA10001\
Date/Time: 8/19/2008 14:04:07
DT Version: 4.7.5

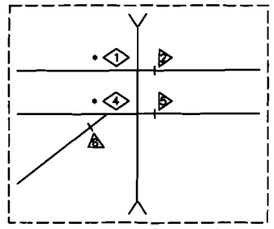

TEMPLATE 2C (MODIFIED)

GCP 4000 PROGRAMMING

REVISIONS		
	invensys SAFETRAN systems	SAFETRAN SYSTEMS CORPORATION KENTUCKY DIVISION 2400 NELSON MILLER PARKWAY LOUISVILLE, KENTUCKY 40223
	TITLE: HIGHWAY GRADE CROSSING SIGNAL SYSTEM PARK AND LINCOLN AVENUE DOLTON, COOK COUNTY, IL	
THE OPERATION OF THE ORGANIZATION REPRESENTED HEREON CANNOT BE CHECKED FINALLY UNTIL ALL CIRCUITS AND DEVICES ARE CONNECTED TO FORM A COMPLETE SYSTEM OR AN EFFECTIVE PORTION THEREOF. SUCH SYSTEM OR PORTION MUST BE GIVEN COMPLETE CIRCUIT AND OPERATIONAL TEST BEFORE BEING PLACED IN REGULAR OPERATION.	CUSTOMER: INDIANA HARBOR BELT	
	DES.: PWW / DATE: 08/04/08	PROJ. NO.: PIHA10001
	CKD.: JTB / ISSUE DATE:	EST. NO.: XP-4147
	DRN.: PWW / CAD ID.: PIHA10001_03.DWG	SHEET 3 OF 13

TO CONFIGURE SEARII & SEARIIi:
PRESS SITE SETUP KEY.
USE ARROW KEYS TO MAKE SELECTION.
PRESS ENTER AFTER SELECTION HAS BEEN MADE.

SEARIIi PROGRAMMING

	PROGRAM MENU QUESTIONS	PROGRAM	OPTIONS / RANGE
	DATE/TIME?		CURRENT DATE/TIME
	AUTOMATIC DST ADJUSTMENT?	YES	YES / NO
	TIME ZONE?	EASTERN	EASTERN,CENTRAL,MOUNTAIN, PACIFIC,ALASKA,HAWAII, ATLANTIC,SASKATCHEWAN, NEW FOUNDLAND
	SITE NAME?	PARK AND LINCOLN AVENUE	STREET NAME
	MILE POST?	10.3	MILEAGE
	DOT/CROSSING ID #?	163-612W	
	TESTER TYPE?	CROSSING	CROSSING, WAYSIDE
	GMT OFFSET	FOLLOWS TIME ZONE	N/A
	DATE FORMAT?	dd-mm-yyyy	mm-dd-yyy, dd-mm-yyyy
	TEMPERATURE FORMAT?	FAHRENHEIT	FAHRENHEIT,CELSIUS
	SITE TYPE?	NO COM	NO COM, BULLHORN,DIALUP, NODE,COLLECTOR
	SITE ATCS ADDRESS?	7.RRR.LLL.GGG.99.01	7.RRR.LLL.GGG.99.01
	OFFICE ATCS ADDRESS?	2.RRR.NN.DDDD	2.RRR.NN.DDDD
(FOR NODE USE)	PRIMARY HOP ADDR?	N/A	7.RRR.LLL.GGG.99.01
(FOR NODE USE)	BACKUP HOP ADDR1?	N/A	7.RRR.LLL.GGG.99.01
(FOR NODE USE)	BACKUP HOP ADDR2?	N/A	7.RRR.LLL.GGG.99.01
(FOR COLLECTOR USE)	POLL ID?	N/A	1-99
(FOR COLLECTOR USE)	MODE?	N/A	GEN/ATCS, GENISYS
(FOR COLLECTOR USE)	WAMS/XID?	N/A	ENABLED, DISABLE
(FOR COLLECTOR USE)	OFFICE COMM. DEVICE?	N/A	DIRECT (RS232) MCM (RS232) MCM (ECHELON) SPREAD SPEC (ECHELON) DIAL MODEM (RS232) S200 RADIO (RS422)
(FOR COLLECTOR USE)	OFFICE PHONE NUMBER (WHEN OFFICE COMM DEVICE = DIAL MODEM)	N/A	PHONE NUMBER OF WAMS
(FOR COLLECTOR USE)	INIT STRING (WHEN OFFICE COMM DEVICE = DIAL MODEM)	N/A	OPTIONAL HAYES MODEM INITIALIZATION STRING
(FOR COLLECTOR USE)	OFFICE COMM. PORT (WHEN SITE TYPE = RS232 OR RS422)	N/A	AUX, COMM.
(FOR COLLECTOR USE)	MCM ADDRESS (WHEN OFFICE COMM DEVICE = MCM)	N/A	
	FIELD COMM. DEVICE?	VHF COMM. (ECHELON)	VHF COMM. (ECHELON), VHF COMM. (RS232), SPREAD SPECTRUM (ECHELON), SPREAD SPECTRUM (RS232)
	USER PORT	57600,8,N,1,N	BAUD,DATA BITS,PARITY, STOP BITS,FLOW CONTROL
	AUX PORT	9600,8,N,1,N	BAUD,DATA BITS,PARITY, STOP BITS,FLOW CONTROL

YOU WILL NOW SEE A MESSAGE "PLEASE WAIT COMPILING STAGE 1"
CONTINUE TO NEXT PROGRAM MENU QUESTIONS.

PROGRAM MENU QUESTIONS	PROGRAM	OPTIONS / RANGE
RESET NAMES/MODULES?	NO	YES / NO
RAILROAD NUMBER	357	1-999
CROSSING CONFIGURATION ?	NORMAL	NORMAL SPLIT GATE DUAL CROSSING EXTERNAL ENTRANCE GATE CONTROLLER(S)
ENTRANCE GATES	0 (SEE NOTE 3)	0-8
GATE POSITION FAIL TIME (SECONDS)	10	10-60
BATTERY BANKS	1	1-3
BATT MON USED	NO	NO / YES
INTERNAL CROSSING CONTROLLERS	0	0-2
EXTERNAL CROSSING CONTROLLERS	0	0-2
VHF COMMUNICATOR	NO	YES / NO
DTMF ACTIVATION	NO	YES / NO
ACTIVATION CODE	N/A	1-999
ACTIVATION TIMEOUT(SEC)	N/A	1-600
ILOD MODULES	0	0-4
ANY LED BULBS USED	NO	NO / YES
AUTO INSPECTIONS	NO	YES / NO
BELL SENSORS	0	0-4
BELL SENSOR TSS1	N/A	NO / YES
BELL SENSOR TSS2	N/A	NO / YES
BELL SENSOR TSS3	N/A	NO / YES
BELL SENSOR TSS4	N/A	NO / YES
BELL SENSOR TSS5	N/A	NO / YES
BELL SENSOR TSS6	N/A	NO / YES
BELL SENSOR TSS7	N/A	NO / YES
BELL SENSOR TSS8	N/A	NO / YES
BELL ON	GATES LOWERING	GATES LOWERING, GATES MOVING, ALWAYS
GFT'S	NO	YES / NO
BATTERIES ON GFT	N/A	1-2
GATE TIP SENSORS	0	YES / NO
RTU	NO	NO / YES
VHF VOICE CHANNEL	N/A	1-8
VHF DATA CHANNEL	N/A	1-8
USE NON-CRITICAL FEATURE	NO	NO / YES
FULL APPROACH MOVE ALARMS	ACTIVATE	ACTIVATE, DO NOT ACTIVATE

YOU WILL NOW SEE A MESSAGE "PLEASE WAIT COMPILING STAGE 2"
CONTINUE TO NEXT PROGRAM MENU QUESTIONS.

PROGRAM MENU QUESTIONS	PROGRAM
EDIT DIGITAL INPUTS	NO
EDIT BATTERIES	NO
EDIT RELAYS	NO
EDIT TEST LEDS	NO
EDIT ILOD SENSORS	NO
EDIT VHF SETTINGS	NO
GCP4K ATCS SUBNODE	16

NOTES:
1) SEARIIi EXECUTIVE 9V725-A01U
2) SEARIIi APPLICATION 9V864-A01J
3) SELECT "0" IF NO GATE TIP AND BELL SENSORS ARE USED. THUS GATE AND BELL SENSOR RELATED STEPS WILL NOT BE AVAILABLE, OTHERWISE ERRORS IN SEAR RECORDING WILL OCCUR.

SEAR IIi PROGRAMMING SHEET

REVISIONS

THE OPERATION OF THE ORGANIZATION REPRESENTED HEREON CANNOT BE CHECKED FINALLY UNTIL ALL CIRCUITS AND DEVICES ARE CONNECTED TO FORM A COMPLETE SYSTEM OR AN EFFECTIVE PORTION THEREOF. SUCH SYSTEM OR PORTION MUST BE GIVEN COMPLETE CIRCUIT AND OPERATIONAL TEST BEFORE BEING PLACED IN REGULAR OPERATION.

invensys SAFETRAN systems

SAFETRAN SYSTEMS CORPORATION
KENTUCKY DIVISION
2400 NELSON MILLER PARKWAY
LOUISVILLE, KENTUCKY 40223

TITLE:
HIGHWAY GRADE CROSSING SIGNAL SYSTEM
PARK AND LINCOLN AVENUE
DOLTON, COOK COUNTY, IL

CUSTOMER:
INDIANA HARBOR BELT

DES.: PWW	DATE: 08/04/08	PROJ. NO.: PIHA10001
CKD.: JTB	ISSUE DATE:	EST. NO.: XP-4147
DRN.: PWW	CAD ID.: PIHA10001_04.DWG	SHEET 4 OF 13

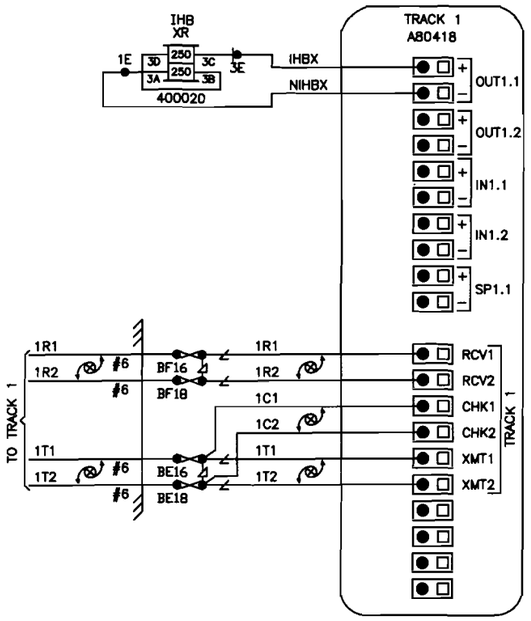

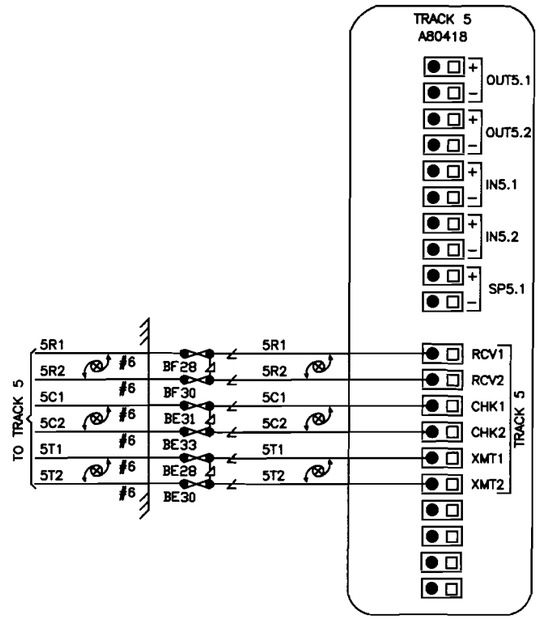

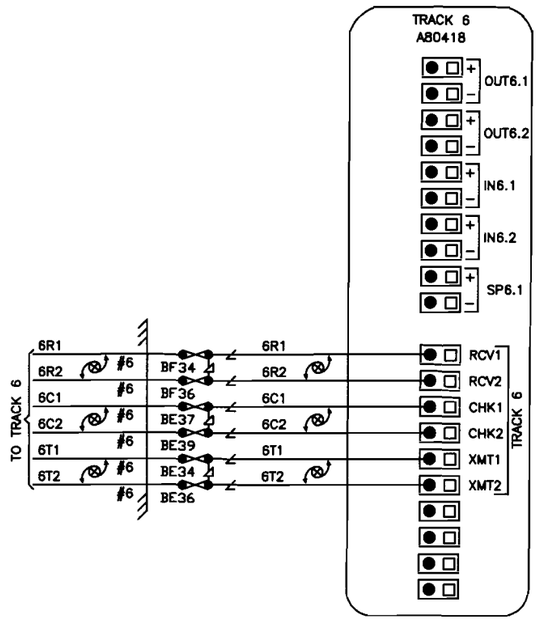

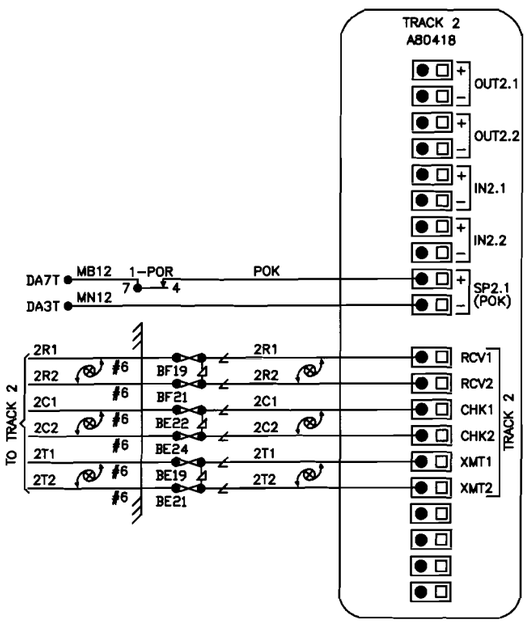

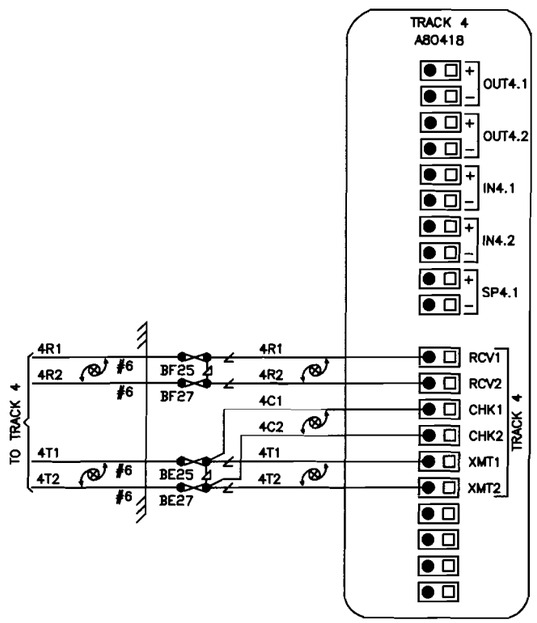

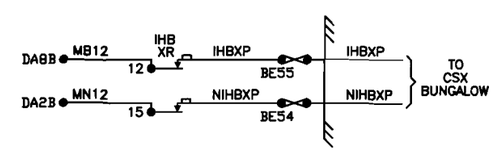

NOTES:

1. ALL WIRING ON THIS SHEET TO BE #16 AWG UNLESS OTHERWISE NOTED.
2. TO BE TWISTED 2 TURNS PER FOOT.

TRACK CIRCUITS

REVISIONS

THE OPERATION OF THE ORGANIZATION REPRESENTED HEREON CANNOT BE CHECKED FINALLY UNTIL ALL CIRCUITS AND DEVICES ARE CONNECTED TO FORM A COMPLETE SYSTEM OR AN EFFECTIVE PORTION THEREOF. SUCH SYSTEM OR PORTION MUST BE GIVEN COMPLETE CIRCUIT AND OPERATIONAL TEST BEFORE BEING PLACED IN REGULAR OPERATION.

invensys SAFETRAN systems

SAFETRAN SYSTEMS CORPORATION
KENTUCKY DIVISION
2400 NELSON MILLER PARKWAY
LOUISVILLE, KENTUCKY 40223

TITLE:
HIGHWAY GRADE CROSSING SIGNAL SYSTEM
PARK AND LINCOLN AVENUE
DOLTON, COOK COUNTY, IL

CUSTOMER:
INDIANA HARBOR BELT

DES.: PWW	DATE: 08/04/08	PROJ. NO.: PIHA10001
CKD.: JTB	ISSUE DATE:	EST. NO.: XP-4147
DRN.: PWW	CAD ID.: PIHA10001_05.DWG	SHEET 5 OF 13

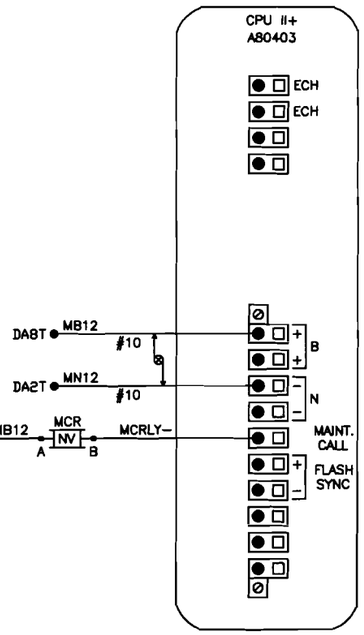

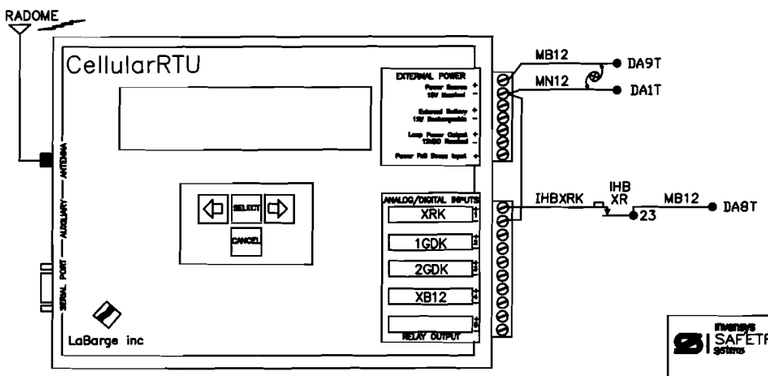

(PROVIDED BY RAILRAOD)

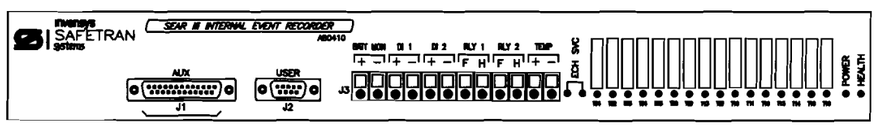

NOTES:

1. ALL WIRING ON THIS SHEET TO BE #16 AWG UNLESS OTHERWISE NOTED.
2. TO BE TWISTED 2 TURNS PER FOOT.

CPU AND RECORDER CIRCUITS

REVISIONS

THE OPERATION OF THE ORGANIZATION REPRESENTED HEREON CANNOT BE CHECKED FINALLY UNTIL ALL CIRCUITS AND DEVICES ARE CONNECTED TO FORM A COMPLETE SYSTEM OR AN EFFECTIVE PORTION THEREOF. SUCH SYSTEM OR PORTION MUST BE GIVEN COMPLETE CIRCUIT AND OPERATIONAL TEST BEFORE BEING PLACED IN REGULAR OPERATION.

invensys SAFETRAN systems

SAFETRAN SYSTEMS CORPORATION
KENTUCKY DIVISION
2400 NELSON MILLER PARKWAY
LOUISVILLE, KENTUCKY 40223

TITLE:
HIGHWAY GRADE CROSSING SIGNAL SYSTEM
PARK AND LINCOLN AVENUE
DOLTON, COOK COUNTY, IL

CUSTOMER:
INDIANA HARBOR BELT

DES.: PWW	DATE: 08/04/08	PROJ. NO.: PIHA10001
CKD.: JTB	ISSUE DATE:	EST. NO.: XP-4147
DRN.: PWW	CAD ID.: PIHA10001_06.DWG	SHEET 6 OF 13

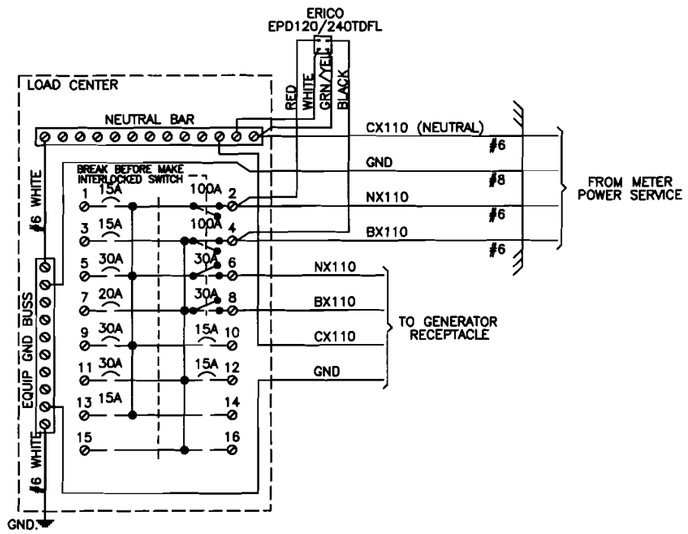

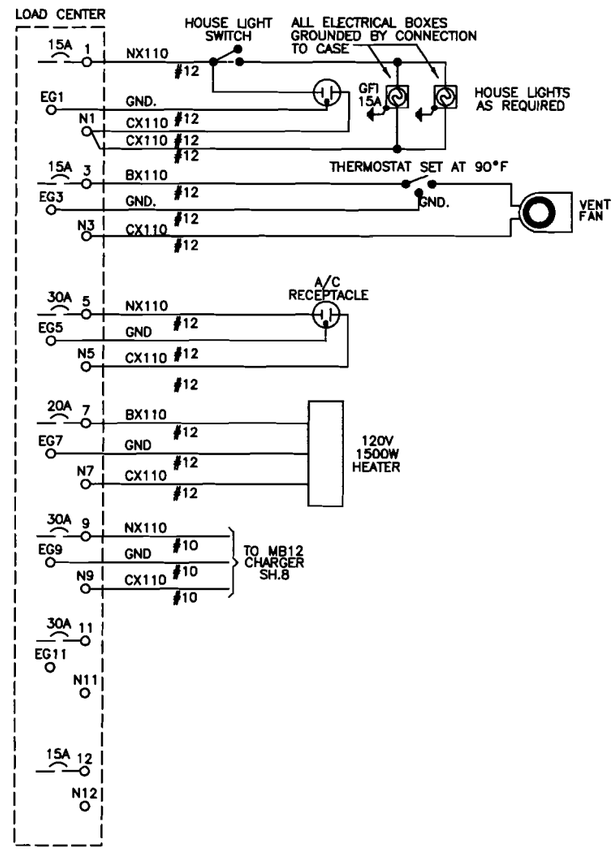

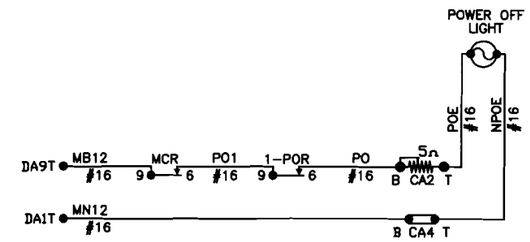

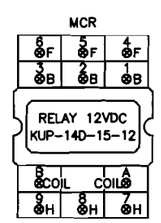

MCR – P&B RELAY 12VDC, 3FB
(WITH THREE 10A CONTACTS @ 28VDC)
RELAY PART #KUP-14D-15-12V
SOCKET PART #27E121

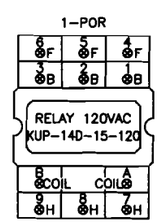

POR – P&B RELAY 120VAC, 3FB
(WITH THREE 10A CONTACTS @ 28VDC)
RELAY PART #KUP-14D-15-120V
SOCKET PART #27E121

NOTE:
1.) ALL WIRE SIZE AS NOTED.

LOAD CENTER WIRING

REVISIONS		
THE OPERATION OF THE ORGANIZATION REPRESENTED HEREON CANNOT BE CHECKED FINALLY UNTIL ALL CIRCUITS AND DEVICES ARE CONNECTED TO FORM A COMPLETE SYSTEM OR AN EFFECTIVE PORTION THEREOF. SUCH SYSTEM OR PORTION MUST BE GIVEN COMPLETE CIRCUIT AND OPERATIONAL TEST BEFORE BEING PLACED IN REGULAR OPERATION.	invensys SAFETRAN systems	SAFETRAN SYSTEMS CORPORATION KENTUCKY DIVISION 2400 NELSON MILLER PARKWAY LOUISVILLE, KENTUCKY 40223
	TITLE: HIGHWAY GRADE CROSSING SIGNAL SYSTEM PARK AND LINCOLN AVENUE DOLTON, COOK COUNTY, IL	
	CUSTOMER: INDIANA HARBOR BELT	
	DES.: PWW / DATE: 08/04/08	PROJ. NO.: PIHA10001
	CKD.: JTB / ISSUE DATE:	EST. NO.: XP-4147
	DRN.: PWW / CAD ID.: PIHA10001_07.DWG	SHEET 7 OF 13

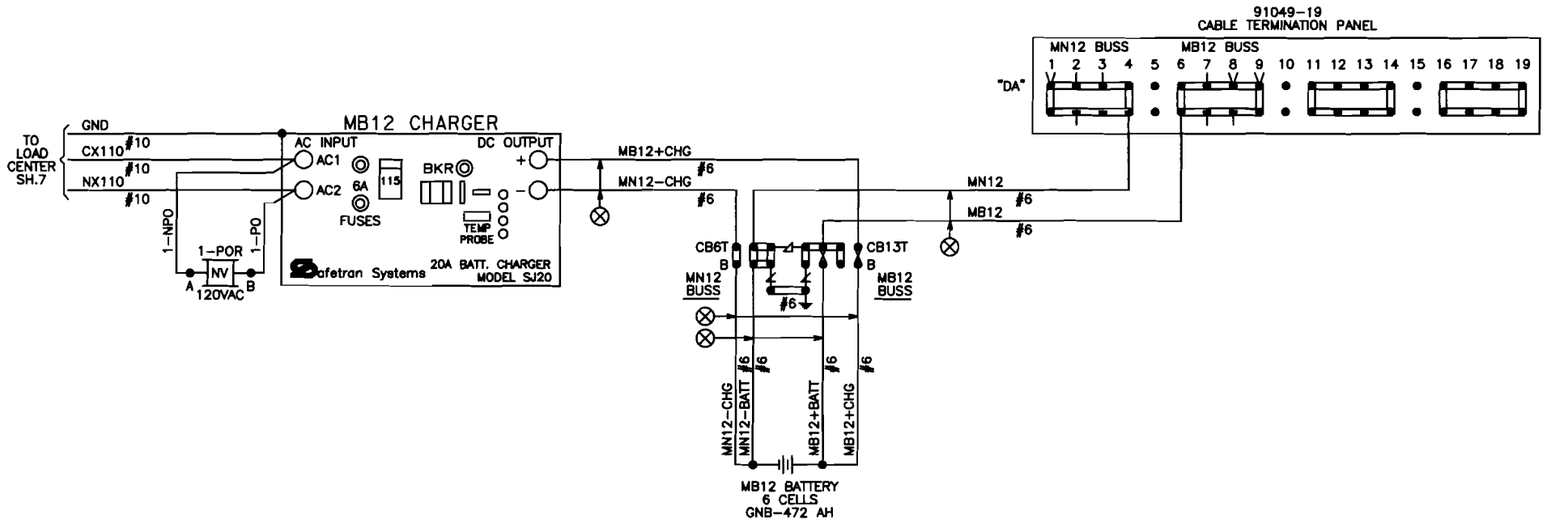

NOTES:

1.) ALL WIRE SIZE AS NOTED.

2.) ⊗=TWISTED WIRE TWO TURNS PER FOOT.

POWER CIRCUITS

REVISIONS		
	invensys SAFETRAN systems	SAFETRAN SYSTEMS CORPORATION KENTUCKY DIVISION 2400 NELSON MILLER PARKWAY LOUISVILLE, KENTUCKY 40223
	TITLE: HIGHWAY GRADE CROSSING SIGNAL SYSTEM PARK AND LINCOLN AVENUE DOLTON, COOK COUNTY, IL.	
THE OPERATION OF THE ORGANIZATION REPRESENTED HEREON CANNOT BE CHECKED FINALLY UNTIL ALL CIRCUITS AND DEVICES ARE CONNECTED TO FORM A COMPLETE SYSTEM OR AN EFFECTIVE PORTION THEREOF. SUCH SYSTEM OR PORTION MUST BE GIVEN COMPLETE CIRCUIT AND OPERATIONAL TEST BEFORE BEING PLACED IN REGULAR OPERATION.	CUSTOMER: INDIANA HARBOR BELT	
	DES.: PWW / DATE: 08/04/08	PROJ. NO.: PIHA10001
	CKD.: JTB / ISSUE DATE:	EST. NO.: XP-4147
	DRN.: PWW / CAD ID.: PIHA10001_08.DWG	SHEET 8 OF 13

ALL INSIDE TERMINALS OF FARADAY CAGE

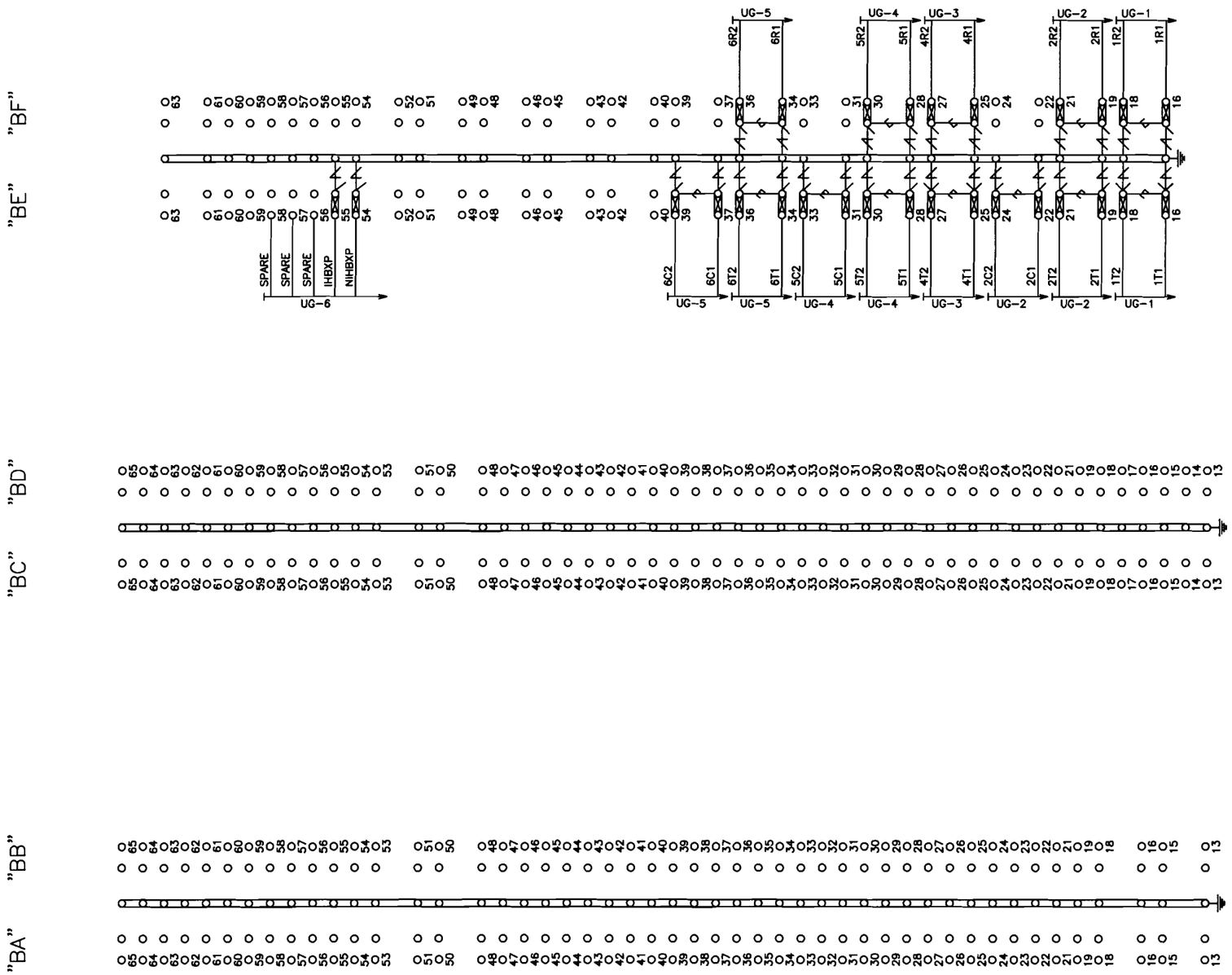

CABLE CONSIST:

UG-1 = (2) 2C#6 T.W. TO TRACK 1
UG-2 = (3) 2C#6 T.W. TO TRACK 2
UG-3 = (2) 2C#6 T.W. TO TRACK 3
UG-4 = (3) 2C#6 T.W. TO TRACK 4
UG-5 = (3) 2C#6 T.W. TO TRACK 5
UG-6 = 5C#9 TO CSX BUNGALOW

= HEAVY DUTY EQUALIZER (022700-1X)

= CLEARVIEW LIGHTNING ARRESTER (022585-1X)

FARADAY CABLE TERMINATION DETAIL

REVISIONS

THE OPERATION OF THE ORGANIZATION REPRESENTED HEREON CANNOT BE CHECKED FINALLY UNTIL ALL CIRCUITS AND DEVICES ARE CONNECTED TO FORM A COMPLETE SYSTEM OR AN EFFECTIVE PORTION THEREOF. SUCH SYSTEM OR PORTION MUST BE GIVEN COMPLETE CIRCUIT AND OPERATIONAL TEST BEFORE BEING PLACED IN REGULAR OPERATION.

invensys SAFETRAN systems

SAFETRAN SYSTEMS CORPORATION
KENTUCKY DIVISION
2400 NELSON MILLER PARKWAY
LOUISVILLE, KENTUCKY 40223

TITLE:
HIGHWAY GRADE CROSSING SIGNAL SYSTEM
PARK AND LINCOLN AVENUE
DOLTON, COOK COUNTY, IL

CUSTOMER:
INDIANA HARBOR BELT

DES.: PWW	DATE: 08/04/08	PROJ. NO.: PIHA10001
CKD.: JTB	ISSUE DATE:	EST. NO.: XP-4147
DRN.: PWW	CAD ID.: PIHA10001_09.DWG	SHEET 9 OF 13

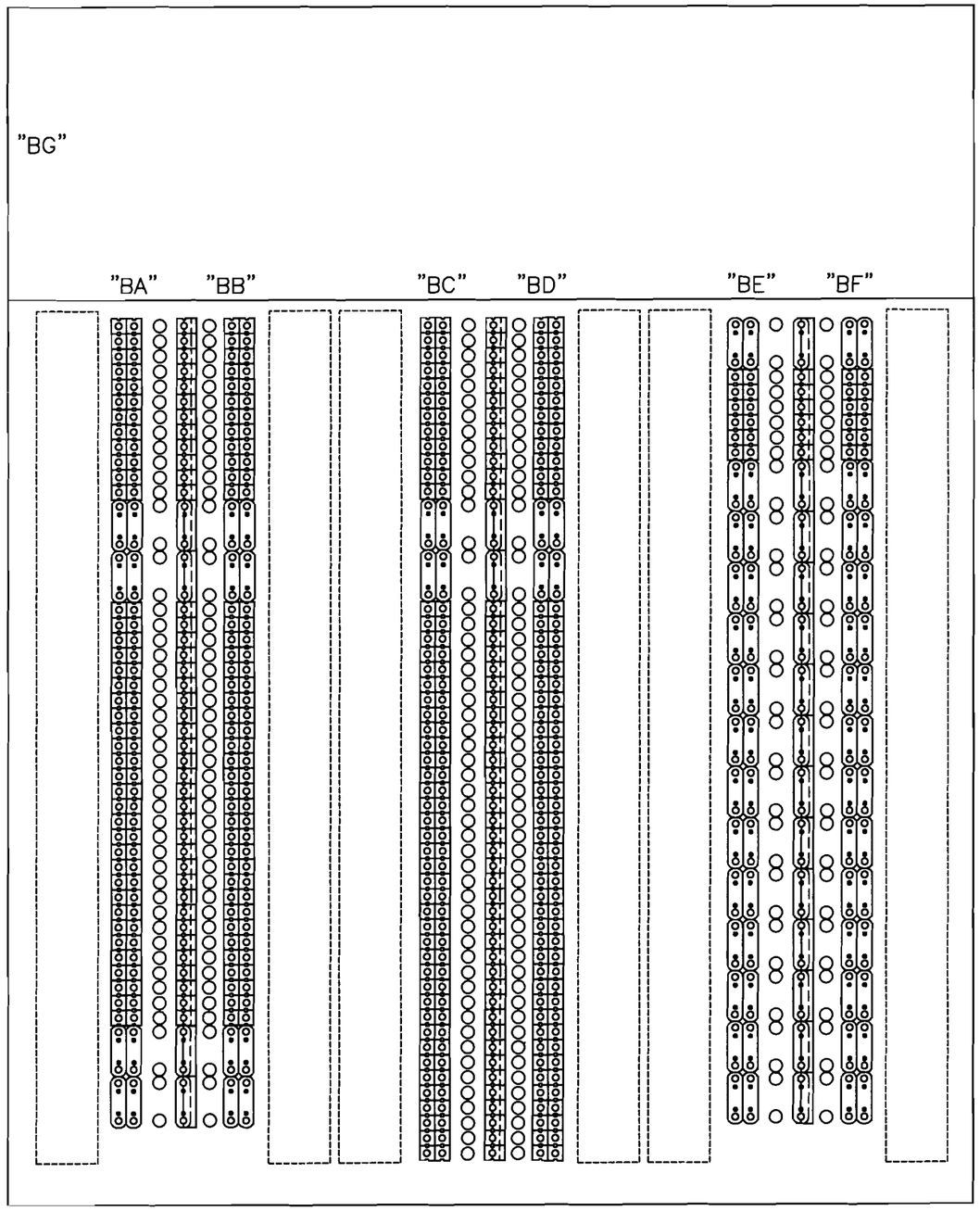

= INDICATES PLACEMENT OF PANDUIT

FARADAY CAGE DETAIL

REVISIONS		
	invensys SAFETRAN systems	SAFETRAN SYSTEMS CORPORATION KENTUCKY DIVISION 2400 NELSON MILLER PARKWAY LOUISVILLE, KENTUCKY 40223
	TITLE: HIGHWAY GRADE CROSSING SIGNAL SYSTEM PARK AND LINCOLN AVENUE DOLTON, COOK COUNTY, IL	
THE OPERATION OF THE ORGANIZATION REPRESENTED HEREON CANNOT BE CHECKED FINALLY UNTIL ALL CIRCUITS AND DEVICES ARE CONNECTED TO FORM A COMPLETE SYSTEM OR AN EFFECTIVE PORTION THEREOF. SUCH SYSTEM OR PORTION MUST BE GIVEN COMPLETE CIRCUIT AND OPERATIONAL TEST BEFORE BEING PLACED IN REGULAR OPERATION.	CUSTOMER: INDIANA HARBOR BELT	

DES.: PWW	DATE: 08/04/08	PROJ. NO.: PIHA10001
CKD.: JTB	ISSUE DATE:	EST. NO.: XP-4147
DRN.: PWW	CAD ID.: PIHA10001_10.DWG	SHEET 10 OF 13

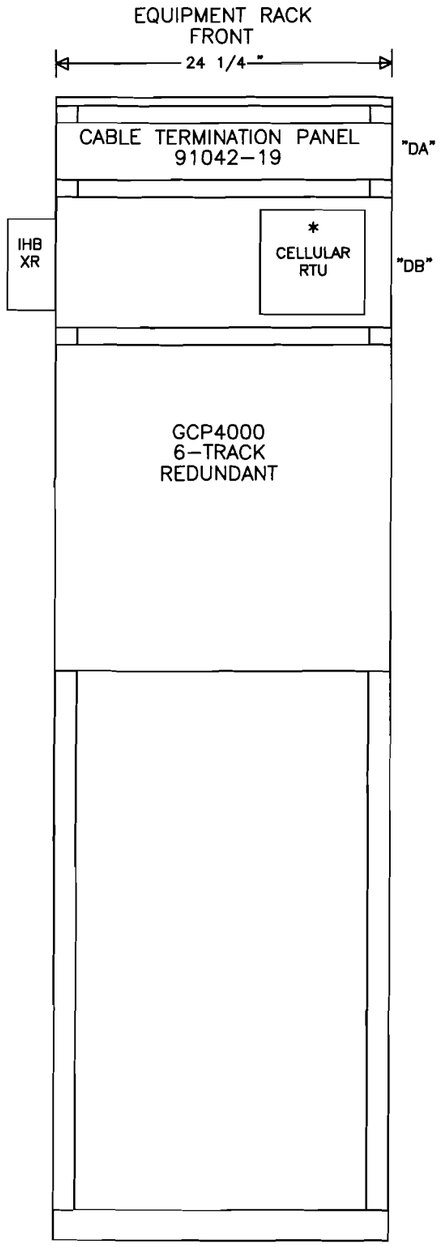

SIDE "D"

NOTE:
* = PROVIDED BY RAILROAD

SIDE "D" 23" X 84" RACK DETAIL

REVISIONS		
	invensys SAFETRAN systems	SAFETRAN SYSTEMS CORPORATION KENTUCKY DIVISION 2400 NELSON MILLER PARKWAY LOUISVILLE, KENTUCKY 40223
	TITLE: HIGHWAY GRADE CROSSING SIGNAL SYSTEM PARK AND LINCOLN AVENUE DOLTON, COOK COUNTY, IL.	
THE OPERATION OF THE ORGANIZATION REPRESENTED HEREON CANNOT BE CHECKED FINALLY UNTIL ALL CIRCUITS AND DEVICES ARE CONNECTED TO FORM A COMPLETE SYSTEM OR AN EFFECTIVE PORTION THEREOF. SUCH SYSTEM OR PORTION MUST BE GIVEN COMPLETE CIRCUIT AND OPERATIONAL TEST BEFORE BEING PLACED IN REGULAR OPERATION.	CUSTOMER: INDIANA HARBOR BELT	

DES.: PWW	DATE: 08/04/08	PROJ. NO.: PIHA10001
CKD.: JTB	ISSUE DATE:	EST. NO.: XP-4147
DRN.: PWW	CAD ID.: PIHA10001_11.DWG	SHEET 11 OF 13

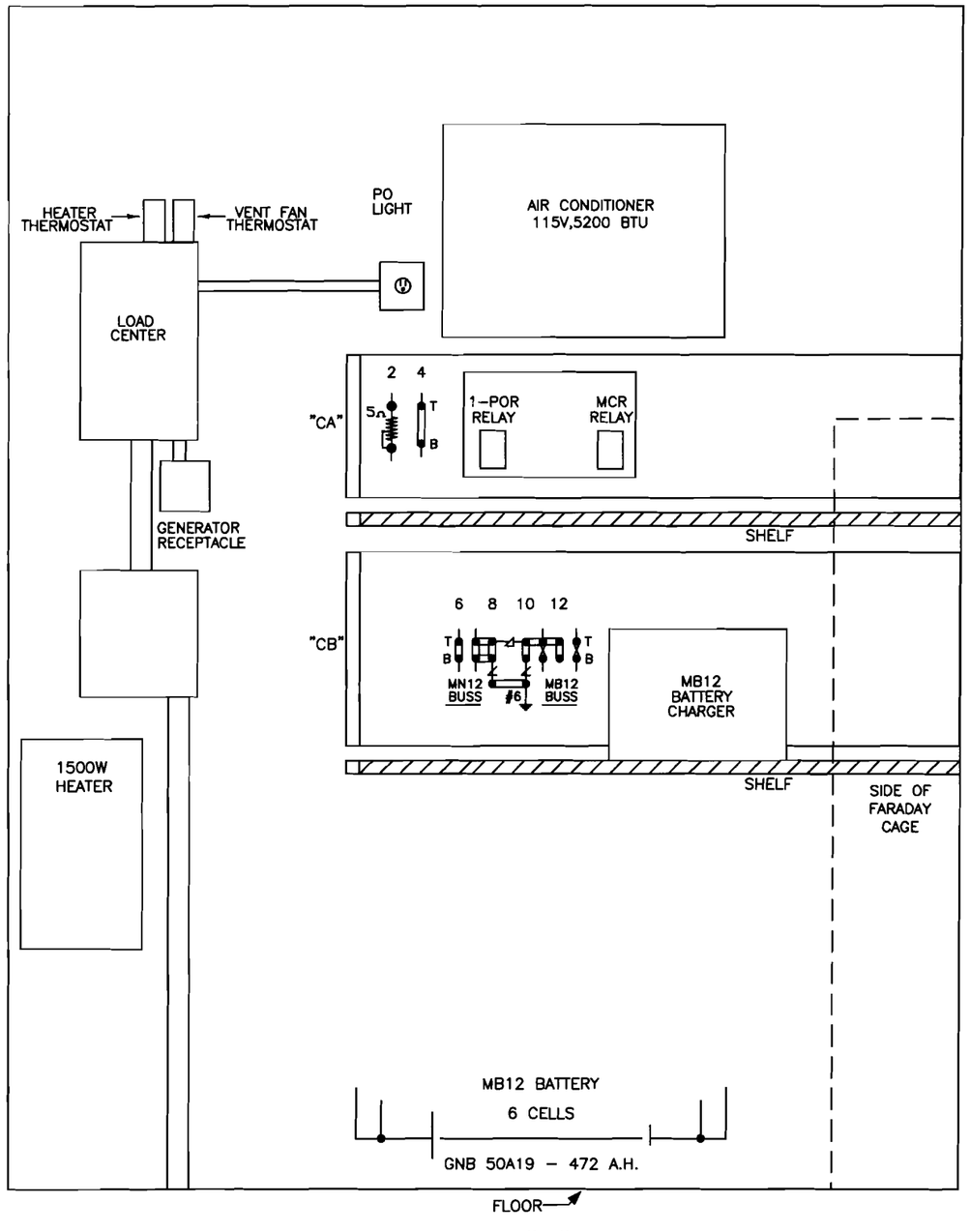

SIDE "C"

6' X 8' HOUSE - SIDE "C"

REVISIONS		
	invensys SAFETRAN systems	SAFETRAN SYSTEMS CORPORATION KENTUCKY DIVISION 2400 NELSON MILLER PARKWAY LOUISVILLE, KENTUCKY 40223
	TITLE: HIGHWAY GRADE CROSSING SIGNAL SYSTEM PARK AND LINCOLN AVENUE DOLTON, COOK COUNTY, IL	
THE OPERATION OF THE ORGANIZATION REPRESENTED HEREON CANNOT BE CHECKED FINALLY UNTIL ALL CIRCUITS AND DEVICES ARE CONNECTED TO FORM A COMPLETE SYSTEM OR AN EFFECTIVE PORTION THEREOF. SUCH SYSTEM OR PORTION MUST BE GIVEN COMPLETE CIRCUIT AND OPERATIONAL TEST BEFORE BEING PLACED IN REGULAR OPERATION.	CUSTOMER: INDIANA HARBOR BELT	
DES.: PWW	DATE: 08/04/08	PROJ. NO.: PIHA10001
CKD.: JTB	ISSUE DATE:	EST. NO.: XP-4147
DRN.: PWW	CAD ID.: PIHA10001_12.DWG	SHEET 12 OF 13

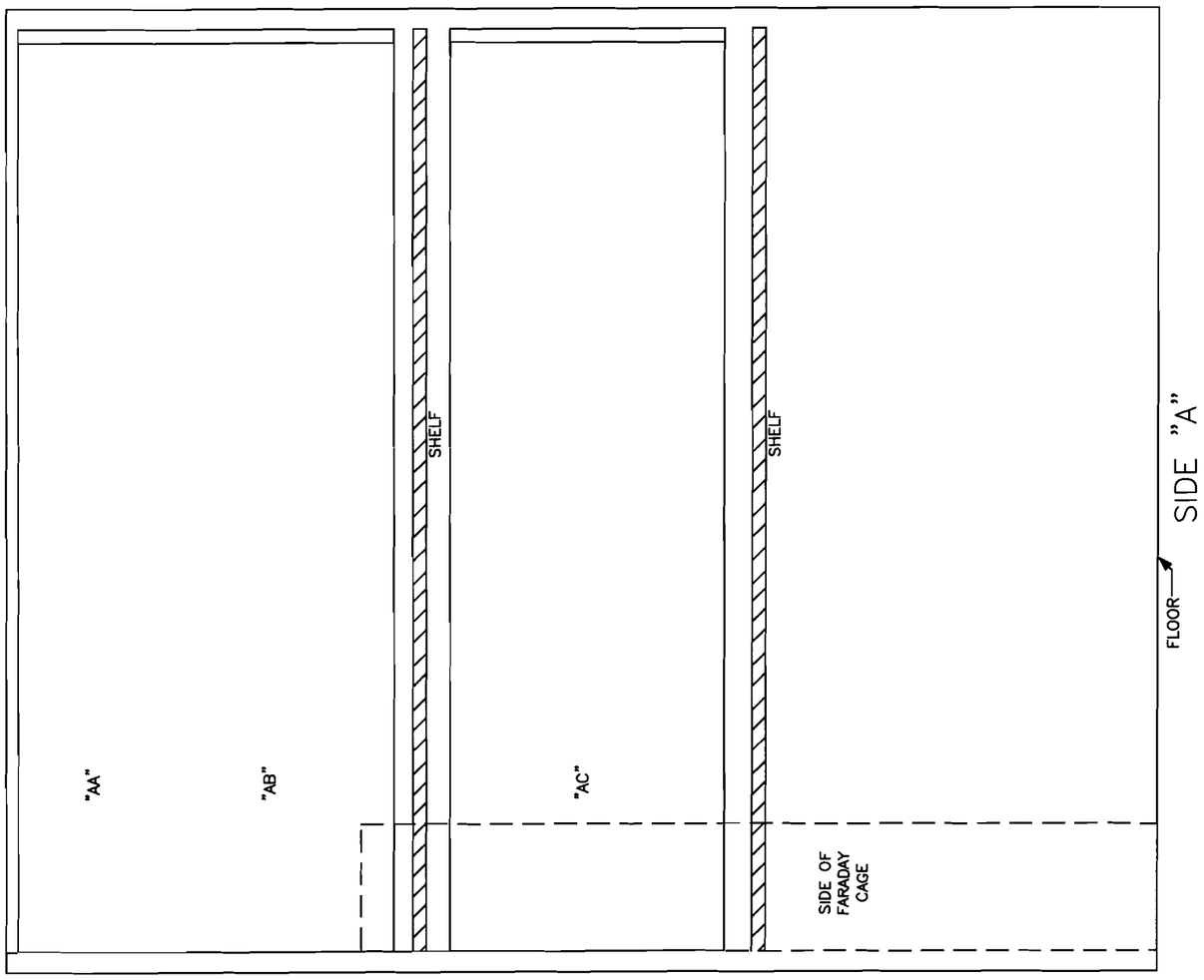

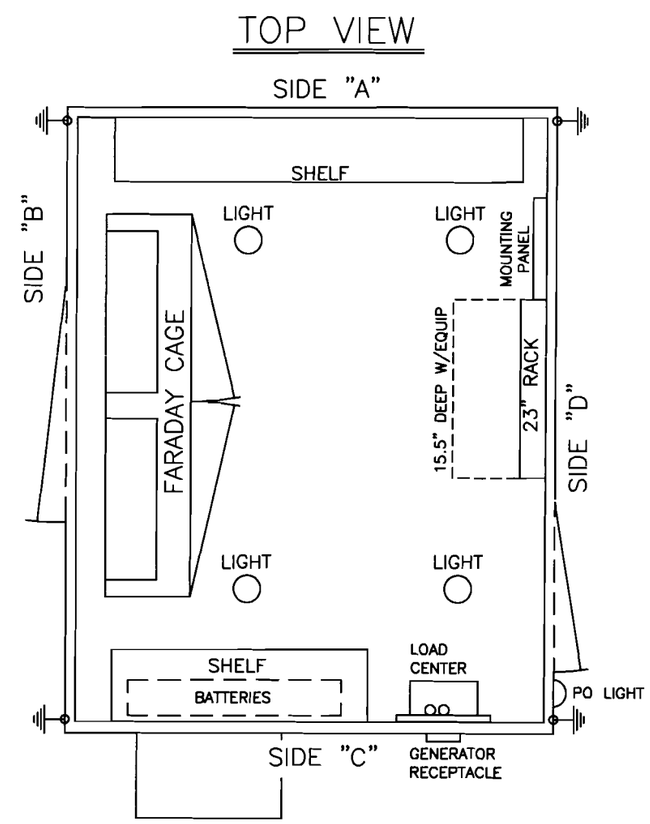

6' X 8' HOUSE (SIDE "A" & TOP VIEW)

REVISIONS		
	invensys SAFETRAN systems	SAFETRAN SYSTEMS CORPORATION KENTUCKY DIVISION 2400 NELSON MILLER PARKWAY LOUISVILLE, KENTUCKY 40223
	TITLE: HIGHWAY GRADE CROSSING SIGNAL SYSTEM PARK AND LINCOLN AVENUE DOLTON, COOK COUNTY, IL.	
THE OPERATION OF THE ORGANIZATION REPRESENTED HEREON CANNOT BE CHECKED FINALLY UNTIL ALL CIRCUITS AND DEVICES ARE CONNECTED TO FORM A COMPLETE SYSTEM OR AN EFFECTIVE PORTION THEREOF. SUCH SYSTEM OR PORTION MUST BE GIVEN COMPLETE CIRCUIT AND OPERATIONAL TEST BEFORE BEING PLACED IN REGULAR OPERATION.	CUSTOMER: INDIANA HARBOR BELT	

DES.: PWW	DATE: 08/04/08	PROJ. NO.: PIHA10001
CKD.: JTB	ISSUE DATE:	EST. NO.: XP-4147
DRN.: PWW	CAD ID.: PIHA10001_13.DWG	SHEET 13 OF 13