PRAIRIE STATE
Energy Campus

PRAIRIE STATE ENERGY CAMPUS

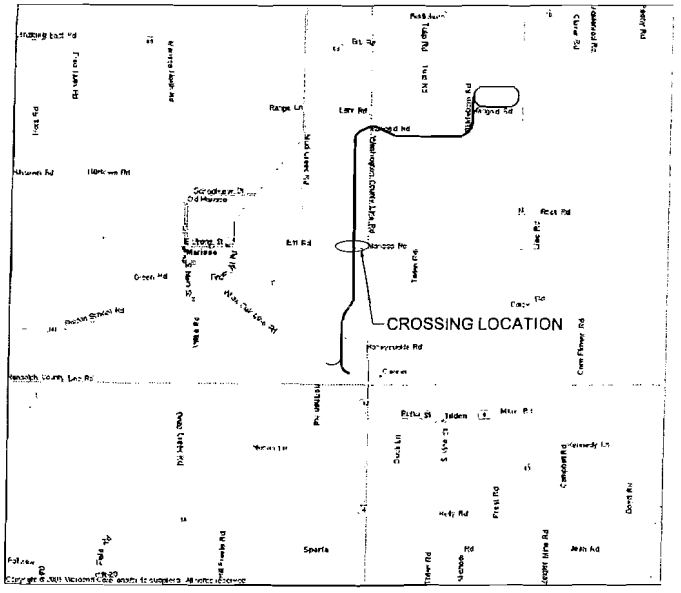

SHEET INDEX

SHEET NO.	DESCRIPTION
1	COVER SHEET
2 - 5	CROSSING EXHIBIT
1 - 10	SIGNAL EXHIBIT
1	DETOUR EXHIBIT

PROPOSED ROAD CROSSING
EIFF ROAD

ROAD CROSSING EXHIBIT

RailWorks Track Services®
4301 BRIDGETON INDUSTRIAL DR.
ST. LOUIS, MISSOURI 63044
(314) 291-2233 FAX (314) 291-2266

DESIGN NINE
11166 TESSON FERRY ROAD
SUITE 100
ST. LOUIS MO, 63123-6966
(314) 729-7600
ENGINEERING SERVICES FOR RAILROADS AND INDUSTRY

REV #	BY	DATE	DESCRIPTION

Drawn By:	JPG	Date:	07/18/2008
Checked By:	RSS/BER	CAD File:	8034-1.dgn
Scale:	NO SCALE	Drawing No.:	1 of 5

- ISSUED -
FOR CONSTRUCTION

COVER PAGE
MARISSA, ILLINOIS
TRACKAGE TO SERVE:
PRAIRIE STATE GENERATING CO., LLC.

GENERAL NOTES
1. PAVEMENT MARKINGS AND ADVANCE WARNING SIGNS ASSOCIATED WITH THE GRADE CROSSING INSTALLATION SHALL BE INSTALLED AS INDICATED ON THE DRAWING AND IN ACCORDANCE TO THE "MANUAL ON UNIFORM TRAFFIC CONTROL DEVICES - MILLENIUM EDITION."
2. ALL DRAINAGE AND PAVEMENT WORK TO BE DONE IN ACCORDANCE WITH CURRENT STATE OF ILLINOIS DEPARTMENT OF TRANSPORTATION STANDARD SPECIFICATIONS FOR ROAD AND BRIDGE CONSTRUCTION
3. EXISTING TREES, SHRUBS, BRUSH, ETC. TO BE CLEARED FROM APPROACH SIGHT TRIANGLES TO PROVIDE UNOBSTRUCTED VIEW OF TRACK BY MOTORISTS. APPROACH SIGHT TRIANGLES TO BE IN ALL FOUR QUADRANTS. APPROACH SIGHT TRIANGLES ALONG CENTERLINE OF HIGHWAY AND CENTERLINE OF TRACK TO BE IN ACCORDANCE WITH U.S. DEPARTMENT OF TRANSPORTATION FEUERAL HIGHWAY ADMINISTRATION RAILROAD-HIGHWAY GRADE CROSSING HANDBOOK REVISED SECOND EDITION AUGUST 2007
4. ALL EXISTING UTILITIES INDICATED ON THE DRAWINGS ARE ACCORDING TO THE BEST INFORMATION AVAILABLE TO THE ENGINEER. HOWEVER, ALL UTILITIES ACTUALLY EXISTING MAY NOT BE SHOWN. ALL UTILITIES SHOULD BE LOCATED AND IDENTIFIED IN THE FIELD PRIOR TO COMMENCEMENT OF ANY WORK.
5. POSTED SPEED LIMIT 50 MPH

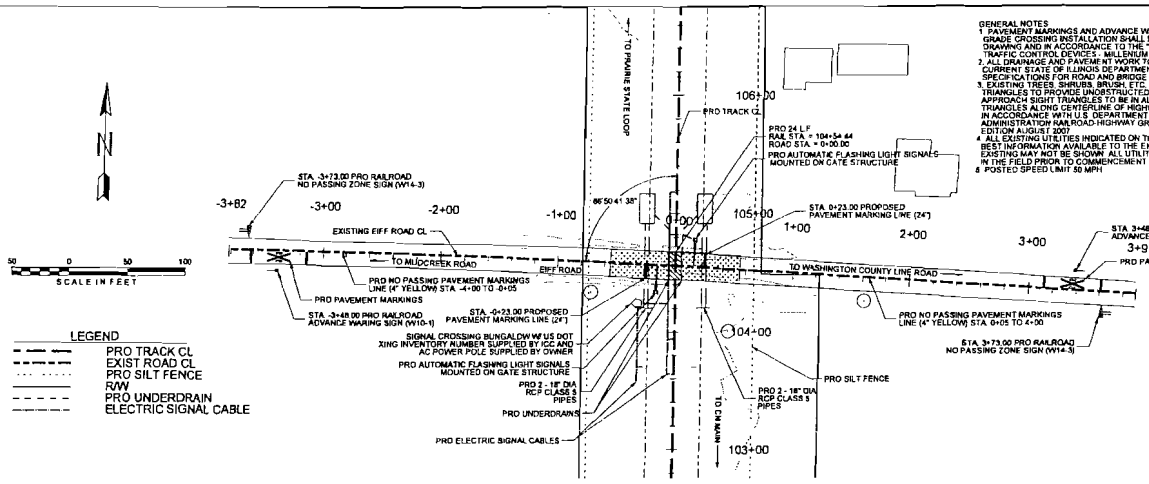

PLAN VIEW

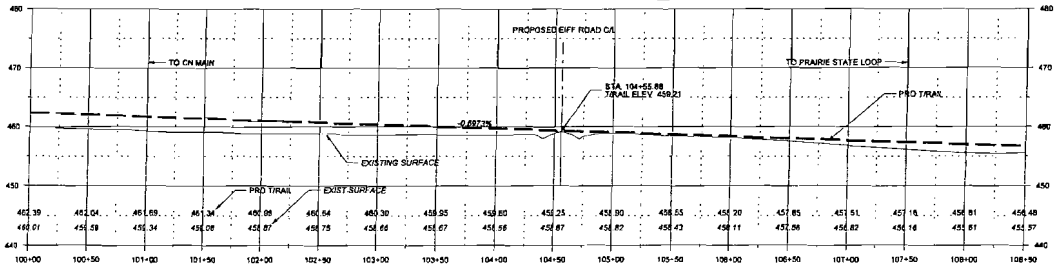

PRO TRACK STA. 104+54.44 = PRO ROAD STA. 0+00.00 = C/L ROAD CROSSING

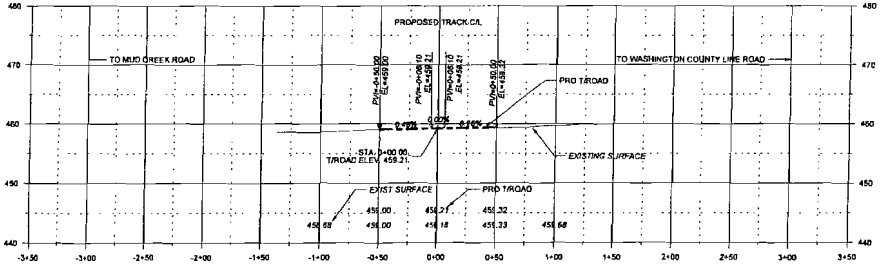

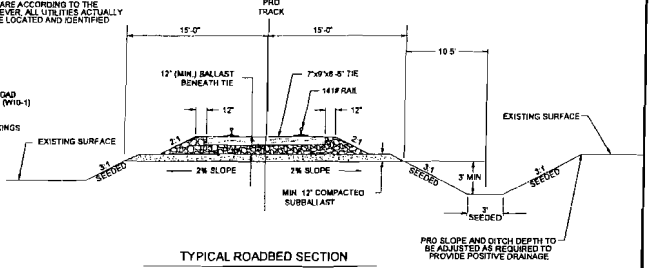

TYPICAL ROADBED SECTION

(NOT TO SCALE)

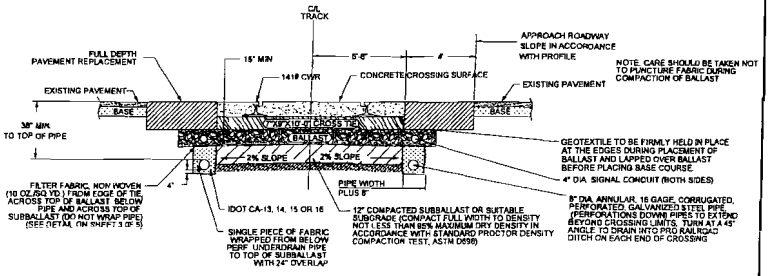

TYPICAL SECTION THROUGH ROADWAY CROSSING

(NOT TO SCALE)

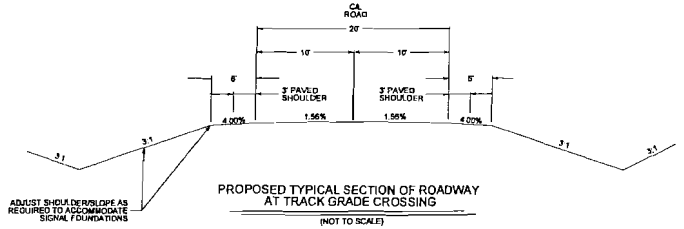

PROPOSED TYPICAL SECTION OF ROADWAY AT TRACK GRADE CROSSING

(NOT TO SCALE)

CROSSING EXHIBIT

RailWorks Track Services®
4301 BRIDGETON INDUSTRIAL DR.
ST. LOUIS, MISSOURI 63044
(314) 291-2233 FAX (314) 291-2266

DESIGN NINE
11166 TESSON FERRY ROAD
SUITE 106
ST. LOUIS MO, 63123-6966
(314) 729-7800
ENGINEERING SERVICES FOR RAILROADS AND INDUSTRY

REV #	BY	DATE	DESCRIPTION

Drawn By:	JPG	Date:	07/18/2008
Checked By:	RSS/BER	CAD File:	08034-1.dgn
Scale:	AS SHOWN	Drawing No.:	2 of 5

- ISSUED -
FOR CONSTRUCTION

LEAD TRACK CROSSING OF EIFF ROAD

EIFF ROAD
MARISSA, ILLINOIS
TRACKAGE TO SERVE:
PRAIRIE STATE GENERATING CO., LLC.

Figure 8D-1. Composite Drawing of Active Traffic Control Devices for Highway-Rail Grade Crossings Showing Clearances

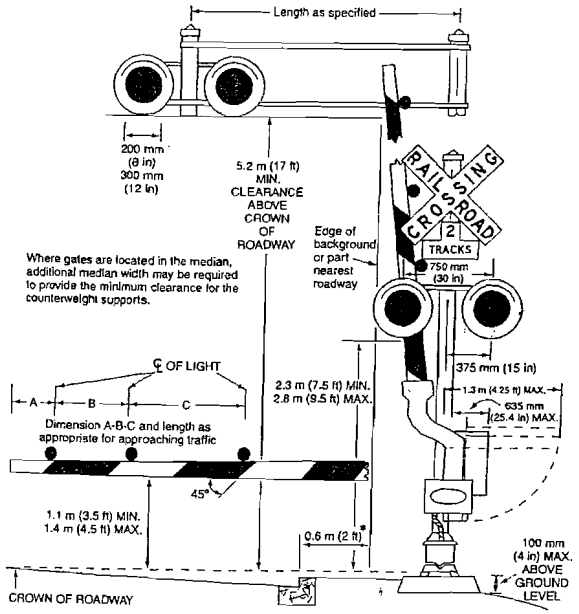

* For locating this reference line at other than curb section installation, see Section 8D.01.

NOTE:
1) * 6' MINIMUM FROM TRAVELED WAY WHEN NO CURB
2) DETAIL ABOVE APPLYS TO GATE ONLY SIGNAL

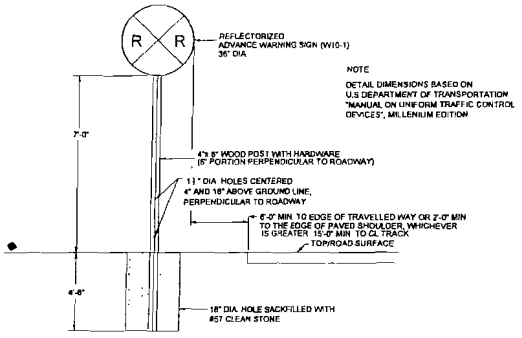

NOTE
DETAIL DIMENSIONS BASED ON U.S DEPARTMENT OF TRANSPORTATION "MANUAL ON UNIFORM TRAFFIC CONTROL DEVICES", MILLENIUM EDITION

ADVANCE WARNING SIGN DETAIL

(NOT TO SCALE)

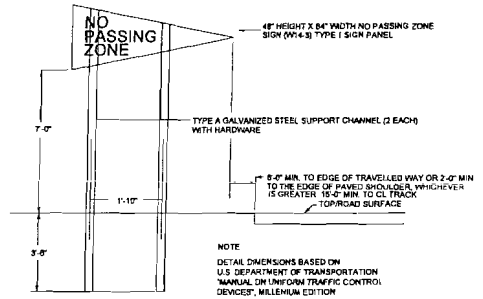

NOTE
DETAIL DIMENSIONS BASED ON U.S DEPARTMENT OF TRANSPORTATION "MANUAL ON UNIFORM TRAFFIC CONTROL DEVICES", MILLENIUM EDITION

NO PASSING ZONE SIGN DETAIL

(NOT TO SCALE)

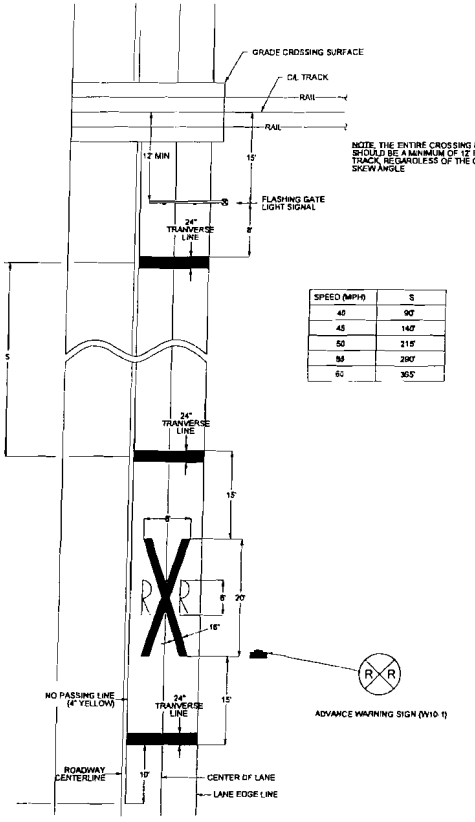

NOTE: THE ENTIRE CROSSING MECHANISM SHOULD BE A MINIMUM OF 12' FROM CL OF TRACK, REGARDLESS OF THE CROSSINGS SKEW ANGLE

SPEED (MPH)	S
40	90'
45	140'
50	215'
55	290'
60	365'

NOTE: THE MARKINGS ARE SYMMETRICAL ABOUT TRACK CENTERLINE

PAVEMENT MARKING

(NOT TO SCALE)

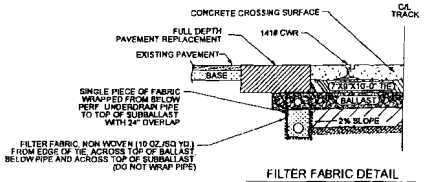

NOTE: CARE SHOULD BE TAKEN NOT TO PUNCTURE FABRIC DURING COMPACTION OF BALLAST

FILTER FABRIC DETAIL

(NOT TO SCALE)

CROSSING EXHIBIT

RailWorks Track Services®
4301 BRIDGETON INDUSTRIAL DR.
ST. LOUIS, MISSOURI 63044
(314) 291-2233 FAX (314) 291-2266

DESIGN NINE
11166 TESSON FERRY ROAD
SUITE 100
ST. LOUIS MO, 63123-6966
(314) 729-7600
ENGINEERING SERVICES FOR RAILROADS AND INDUSTRY

REV #	BY	DATE	DESCRIPTION

Drawn By:	JPG	Date:	07/18/2008
Checked By:	RSS/BER	CAD File:	8034-1.dgn
Scale:	NO SCALE	Drawing No.:	3 of 5

- ISSUED -
FOR CONSTRUCTION

MISCELLANEOUS DETAILS

EIFF ROAD
MARISSA, ILLINOIS
TRACKAGE TO SERVE:
PRAIRIE STATE GENERATING CO., LLC.

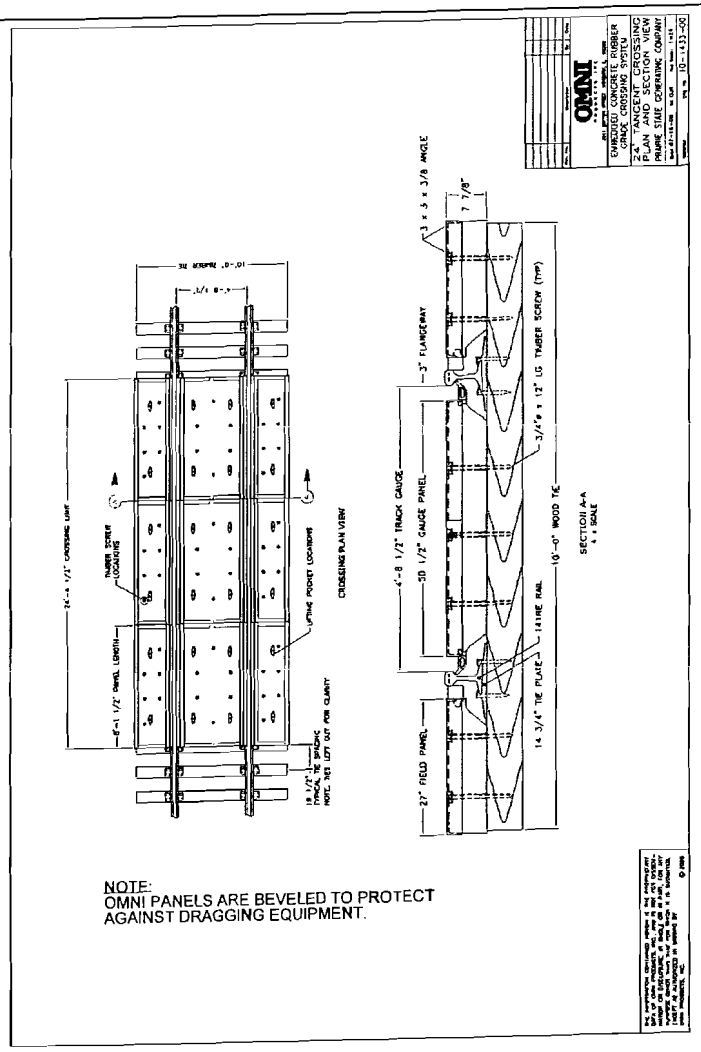

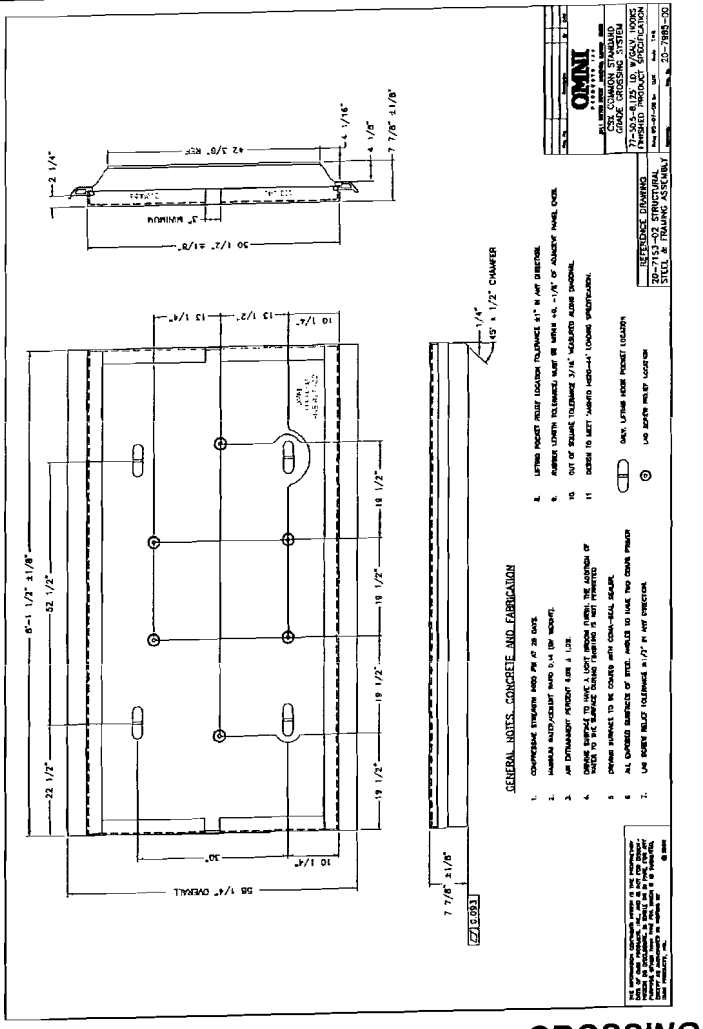

CROSSING EXHIBIT

RailWorks Track Services
4301 BRIDGETON INDUSTRIAL DR
ST. LOUIS, MISSOURI 63044
(314) 291-2233 FAX (314) 291-2266

DESIGN NINE
11166 TESSON FERRY ROAD
SUITE 100
ST. LOUIS MO, 63123-6966
(314) 729-7600
ENGINEERING SERVICES FOR RAILROADS AND INDUSTRY

REV #	BY	DATE	DESCRIPTION

Drawn By:	JPG	Date:	07/18/2008
Checked By:	RSS/BER	CAD File:	8034-1.dgn
Scale:	NO SCALE	Drawing No.:	4 of 5

ISSUED
FOR CONSTRUCTION

CONCRETE GRADE CROSSING

EIFF ROAD
MARISSA, ILLINOIS
TRACKAGE TO SERVE:
PRAIRIE STATE GENERATING CO., LLC.

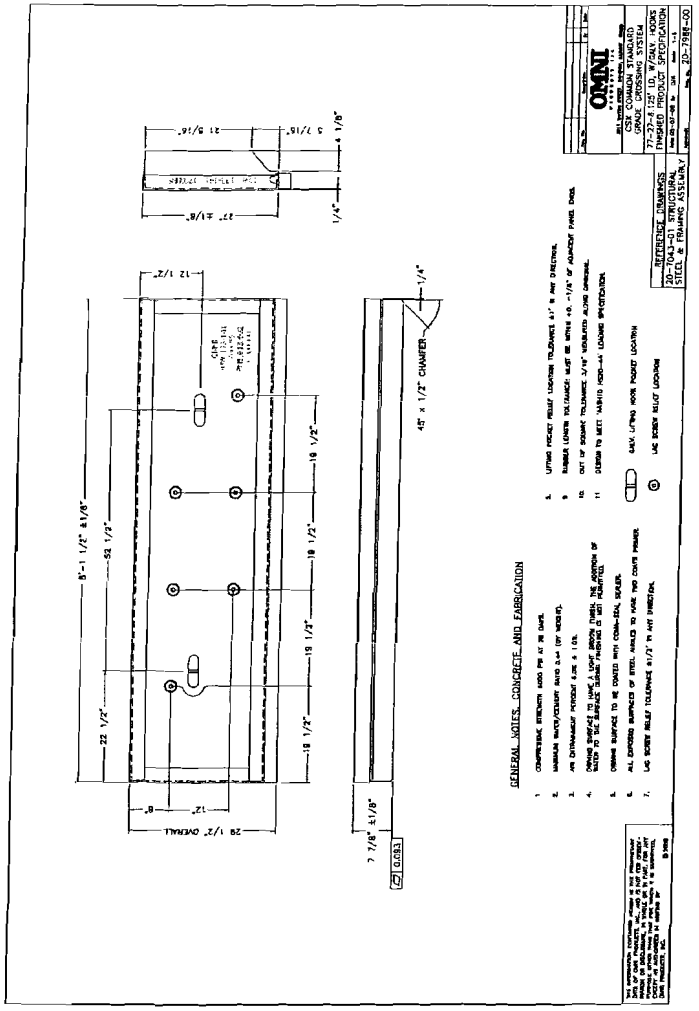

CROSSING EXHIBIT

RailWorks Track Services®
4301 BRIDGETON INDUSTRIAL DR.
ST. LOUIS, MISSOURI 63044
(314) 291-2233 FAX (314) 291-2266

DESIGN NINE
11166 TESSON FERRY ROAD
SUITE 100
ST. LOUIS MO, 63123-6966
(314) 729-7600
ENGINEERING SERVICES FOR RAILROADS AND INDUSTRY

REV #	BY	DATE	DESCRIPTION

Drawn By:	JPG	Date:	07/18/2008
Checked By:	RSS/BER	CAD File:	8034-1.dgn
Scale:	NO SCALE	Drawing No.:	5 of 5

- ISSUED -
FOR CONSTRUCTION

CONCRETE GRADE CROSSING

EIFF ROAD
MARISSA, ILLINOIS
TRACKAGE TO SERVE:
PRAIRIE STATE GENERATING CO., LLC.

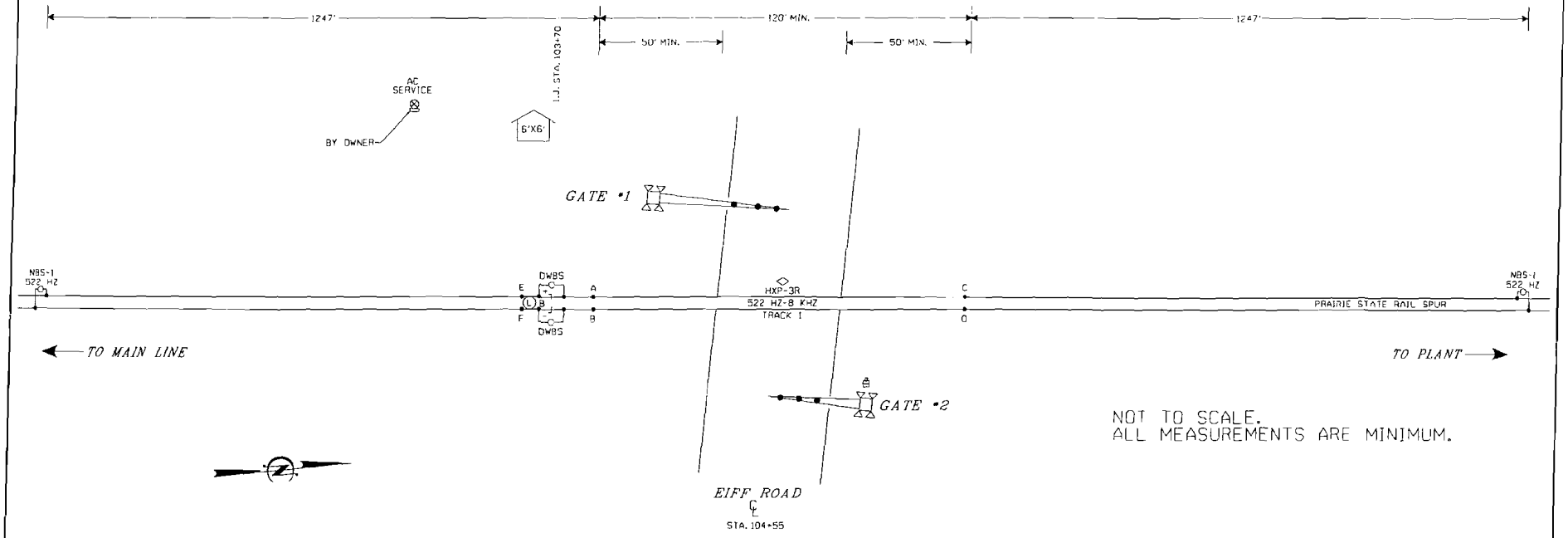

NOT TO SCALE.
ALL MEASUREMENTS ARE MINIMUM.

NOTES:

1. ALL WIRING IN THE BUNGALOW IS #16 AWG FLEX UNLESS OTHERWISE NOTED.
2. SEE APPROACH CIRCUIT DISTANCE CALCULATION TABLE FOR PLANNED WARNING TIME AND TRAIN SPEED PER TRACK.
3. TRANSMITTER WIRE T1 AND T2 MUST BE RUN TO THE TRACK BUNGALOW SIDE OF CROSSING.
4. APPROACH DISTANCES ARE TO BE MEASURED FROM THE CIRCUIT FEED POINTS.

LEGEND:

- -TEST TERMINAL
- -EQUALIZER
- -ARRESTER TO GROUND
- -TWISTED WIRE 2 TURNS PER FOOT
- -INSULATED NUT
- (L) -BATTERY CHOKE
- NBS-1 -TERMINAL SHUNT

APPROACH CIRCUIT DISTANCE CALCULATION

	TRACK1
BASE WARNING TIME	30 SEC
PLUS TIME FOR CLEARANCE DISTANCE > 35'	0 SEC
EQUALS PLANNED WARNING TIME	30 SEC
PLUS TIME FOR EQUIPMENT RESPONSE	4 SEC
PLUS TIME FOR TRAFFIC PRE-EMPTION	0 SEC
EQUALS CIRCUIT APPROACH TIME	34 SEC
TIMES MAXIMUM PLANNED TRAIN SPEED	25 MPH
TIMES RATIO OF FEET PER SECOND TO MILE PER HOUR	22/15
EQUALS APPROACH CIRCUIT DISTANCE WITH ANY FRACTIONAL VALUE INCREASED TO FULL UNIT	1247 FT

SIGNAL EXHIBIT

RailWorks Track Services
4301 BRIDGETON INDUSTRIAL DR.
ST. LOUIS, MISSOURI 63044
(314) 291-2233 FAX (314) 291-2266

DESIGN NINE
11166 TESSON FERRY ROAD
SUITE 100
ST. LOUIS MO, 63123-6966
(314) 729-7600
ENGINEERING SERVICES FOR RAILROADS AND INDUSTRY

REV #	BY	DATE	DESCRIPTION

Drawn By:	JPG	Date:	07/18/2008
Checked By:	RSS/BER	CAD File:	8034-1.dgn
Scale:	NO SCALE	Drawing No.:	1 of 10

THE OPERATION OF THE CIRCUITS AND EQUIPMENT REPRESENTED HEREIN CANNOT BE FULLY CHECKED UNTIL ALL CIRCUITS AND DEVICES ARE CONNECTED TO FORM A COMPLETE SYSTEM, OR AN EFFECTIVE SUBSYSTEM. SUCH SYSTEM OR SUBSYSTEM MUST BE GIVEN COMPLETE CIRCUIT AND OPERATIONAL TESTS BEFORE BEING PLACED IN REGULAR OPERATION

CROSSING TRACK PLAN
EIFF ROAD
LIVELY GROVE, ILLINOIS

SIGNAL DETAILS
MARISSA, ILLINOIS
TRACKAGE TO SERVE:
PRAIRIE STATE GENERATING CO., LLC.

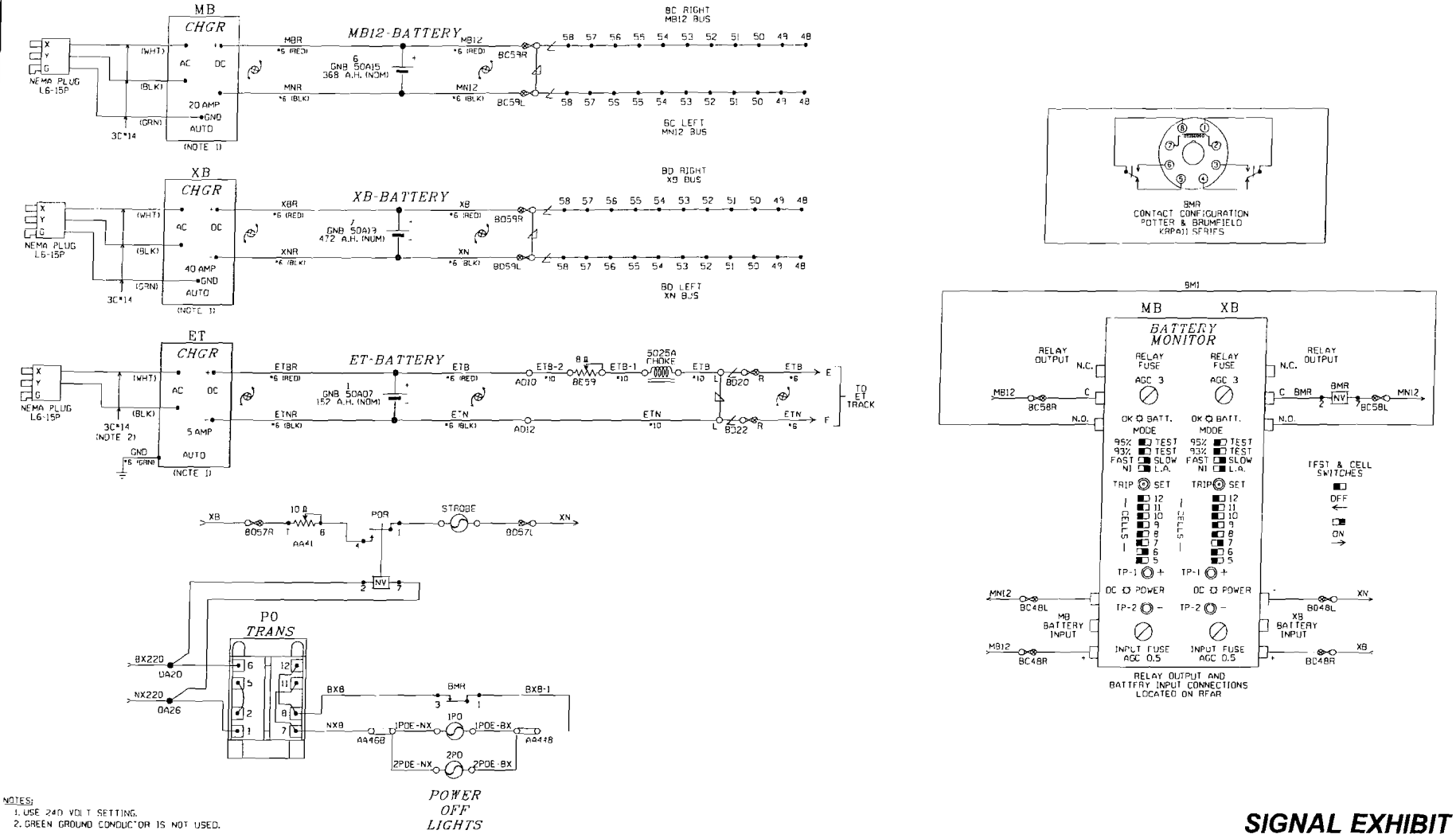

NOTES:
1. USE 240 VOLT SETTING.
2. GREEN GROUND CONDUCTOR IS NOT USED.

SIGNAL EXHIBIT

RailWorks Track Services
4301 BRIDGETON INDUSTRIAL DR.
ST. LOUIS, MISSOURI 63044
(314) 291-2233 FAX (314) 291-2266

DESIGN NINE
11168 TESSON FERRY ROAD
SUITE 100
ST. LOUIS MO, 63123-6966
(314) 729-7800
ENGINEERING SERVICES FOR RAILROADS AND INDUSTRY

REV #	BY	DATE	DESCRIPTION

Drawn By:	JPG	Date:	07/18/2008
Checked By:	RSS/BER	CAD File:	8034-1.dgn
Scale:	NO SCALE	Drawing No.:	2 of 10

THE OPERATION OF THE CIRCUITS AND EQUIPMENT REPRESENTED HEREIN CANNOT BE FULLY CHECKED UNTIL ALL CIRCUITS AND DEVICES ARE CONNECTED TO FORM A COMPLETE SYSTEM, OR AN EFFECTIVE SUBSYSTEM. SUCH SYSTEM OR SUBSYSTEM MUST BE GIVEN COMPLETE CIRCUIT AND OPERATIONAL TESTS BEFORE BEING PLACED IN REGULAR OPERATION.

BATTERY & PO CIRCUITS
EIFF ROAD
LIVELY GROVE, ILLINOIS

SIGNAL DETAILS
MARISSA, ILLINOIS
TRACKAGE TO SERVE:
PRAIRIE STATE GENERATING CO., LLC.

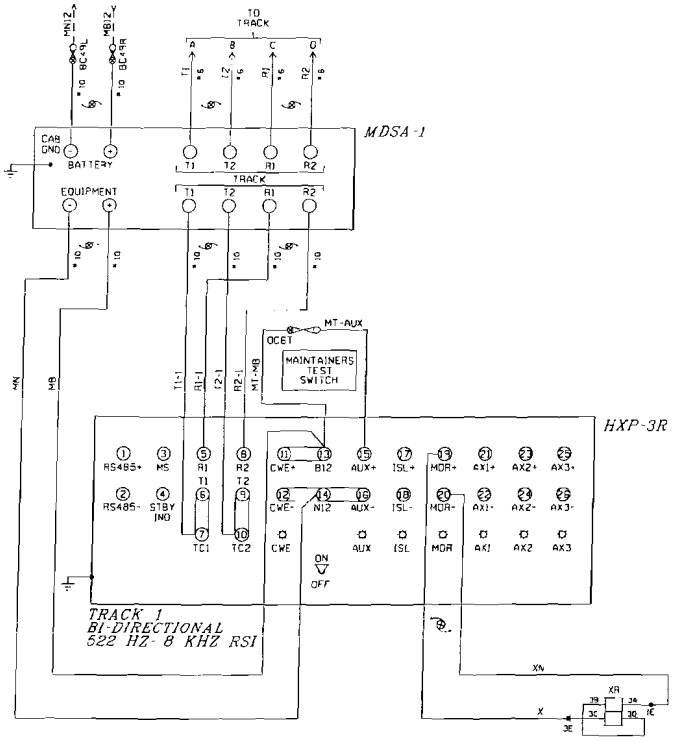

PROGRAM INFORMATION

PROGRAM VERSION 41.0 OR LATER

* = FIELD ADJUSTMENT TO BE MADE ACCORDING TO THE HXP-3 INSTRUCTION MANUAL.

HXP-3R ADJUSTMENTS

NO.	ADJUSTMENT NAME	TRACK 1
1	APP. LENGTH	1247'
2	WARNING TIME	30 SEC.
3	LIA	*
4	TC	*
5	MD RESTART	0

OPTION ADJUSTMENTS

NO.	ABBREVIATION	TRACK 1
1	TK-ENA	UP
2	TK FO	522 HZ
3	CW/MD	C
4	UNI-BI	b (BI)
5	NBS-C	*
6	CWEWT	DL (80 SEC.)
7	LOS	DL (16 SEC.)
8	IJ-LOS	DL (5 SEC.)
9	BC	147 *
10	P-COMP	*
11	AX1	NA
12	AX2	NA
13	AX3	NA
17	MOR-AX	"dn"
	OF-TK 1 OR 2	DL (0)
	CJ-LOS	DL (0)
	PJ-DET	DL (15)
	PJ-RX	DL (15)
18	MD-TMR	DL (10)
19	MIN-WT	DL (0)
20	FS-DET	"dn"
	FS-RX	DL (0)
	FS-TM	DL (10)
21	POS-ST	"dn"
	POS-RX	DL (0)
	POS-TM	DL (0)
22	AR-TMR	"dn"
	AR-RX	DL (0)
	AR-TM	DL (10)
47	ATO-RX	UP
48	PF-ENA	"dn"

AX ADJUSTMENTS

NO.	ABBREVIATION	AX 1	AX 2	AX 3
1	TK-ASN			
2	OF-TKI			
3	WT			
4	MD-RST			
5	CW/MD			
6	CJ-LOS			
7	PJ DET			
8	PJ-RX			
9	POS-ST			

CIRCUIT BOARD INFORMATION

SWITCH OR JUMPER	TRACK 1
RSI FAULT JUMPER	0
RSI-LOS JUMPER	1
TLM W1 JUMPER	PINS 1-2
TLM W2 JUMPER	PINS 1-2
TLM W3 JUMPER	PINS 2-3
TLM MINUTE TIMEOUT	5 MIN
RYD CW/MD	CW
TLM STANDBY/AUTO/NORMAL	AUTO

NOTE: DL= DEFAULT LEVEL
NA= NON APPLICABLE

NOTES FOR S6 AND S7:

1) ACTUATOR 1 SELECTS NORMAL APPROACH WHEN SET TO ON POSITION.

2) WITH ACTUATOR 1 IN OFF POSITION ACTUATOR 2 SELECTS SHORT APPROACH WHEN OFF AND SELECTS VERY SHORT WHEN ON.

3) ACTUATOR 3 AND 4 RESERVED FOR FUTURE USE.

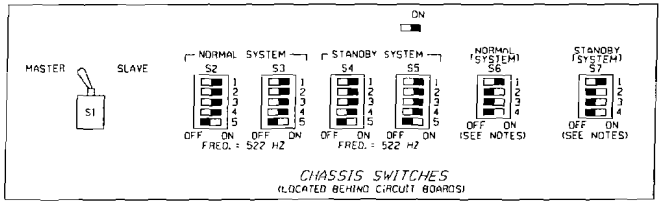

CHASSIS SWITCHES
(LOCATED BEHIND CIRCUIT BOARDS)

SIGNAL EXHIBIT

RailWorks Track Services®
4301 BRIDGETON INDUSTRIAL DR.
ST. LOUIS, MISSOURI 63044
(314) 291-2233 FAX (314) 291-2266

DESIGN NINE
11166 TESSON FERRY ROAD
SUITE 100
ST. LOUIS MO, 63123-6966
(314) 729-7600
ENGINEERING SERVICES FOR RAILROADS AND INDUSTRY

REV #	BY	DATE	DESCRIPTION

Drawn By:	JPG	Date:	07/18/2008
Checked By:	RSS/BER	CAD File:	8034-1.dgn
Scale:	NO SCALE	Drawing No.:	3 of 10

THE OPERATION OF THE CIRCUITS AND EQUIPMENT REPRESENTED HEREIN CANNOT BE FULLY CHECKED UNTIL ALL CIRCUITS AND DEVICES ARE CONNECTED TO FORM A COMPLETE SYSTEM, OR AN EFFECTIVE SUBSYSTEM. SUCH SYSTEM OR SUBSYSTEM MUST BE GIVEN COMPLETE CIRCUIT AND OPERATIONAL TESTS BEFORE BEING PLACED IN REGULAR OPERATION.

HXP-3R CIRCUITS
EIFF ROAD
LIVELY GROVE, ILLINOIS

SIGNAL DETAILS
MARISSA, ILLINOIS
TRACKAGE TO SERVE:
PRAIRIE STATE GENERATING CO., LLC.

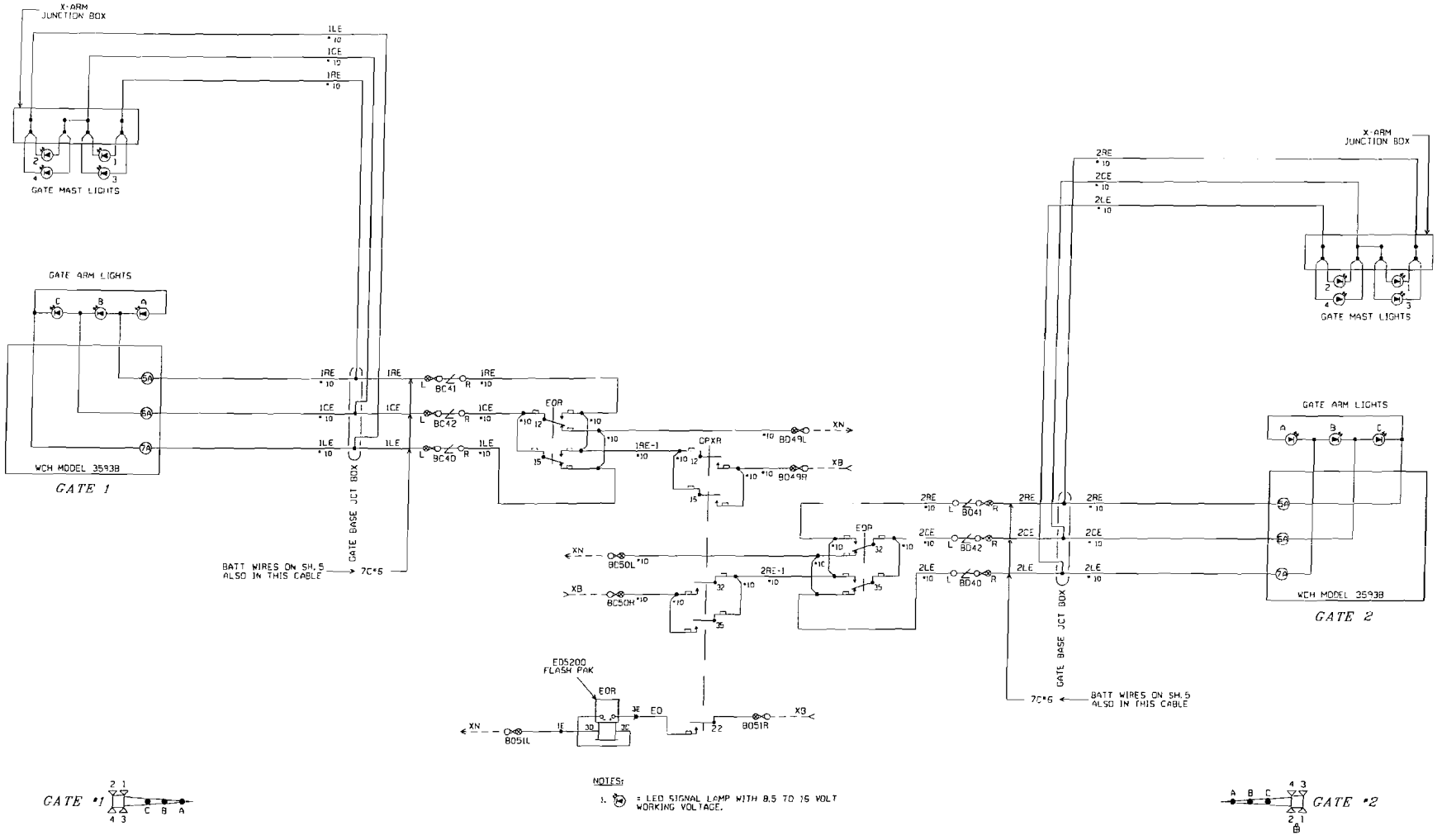

GATE #1

NOTES:

1. = LED SIGNAL LAMP WITH 8.5 TO 15 VOLT WORKING VOLTAGE.

GATE #2

SIGNAL EXHIBIT

RailWorks Track Services
4301 BRIDGETON INDUSTRIAL DR.
ST. LOUIS, MISSOURI 63044
(314) 291-2233 FAX (314) 291-2266

DESIGN NINE
11166 TESSON FERRY ROAD
SUITE 100
ST. LOUIS MO, 63123-6966
(314) 729-7600
ENGINEERING SERVICES FOR RAILROADS AND INDUSTRY

REV #	BY	DATE	DESCRIPTION

Drawn By:	JPG	Date:	07/18/2008
Checked By:	RSS/BER	CAD File:	8034-1.dgn
Scale:	NO SCALE	Drawing No.:	4 of 10

THE OPERATION OF THE CIRCUITS AND EQUIPMENT REPRESENTED HEREIN CANNOT BE FULLY CHECKED UNTIL ALL CIRCUITS AND DEVICES ARE CONNECTED TO FORM A COMPLETE SYSTEM, OR AN EFFECTIVE SUBSYSTEM. SUCH SYSTEM OR SUBSYSTEM MUST BE GIVEN COMPLETE CIRCUIT AND OPERATIONAL TESTS BEFORE BEING PLACED IN REGULAR OPERATION.

CROSSING LAMP CIRCUITS
EIFF ROAD
LIVELY GROVE, ILLINOIS

SIGNAL DETAILS
MARISSA, ILLINOIS
TRACKAGE TO SERVE:
PRAIRIE STATE GENERATING CO., LLC.

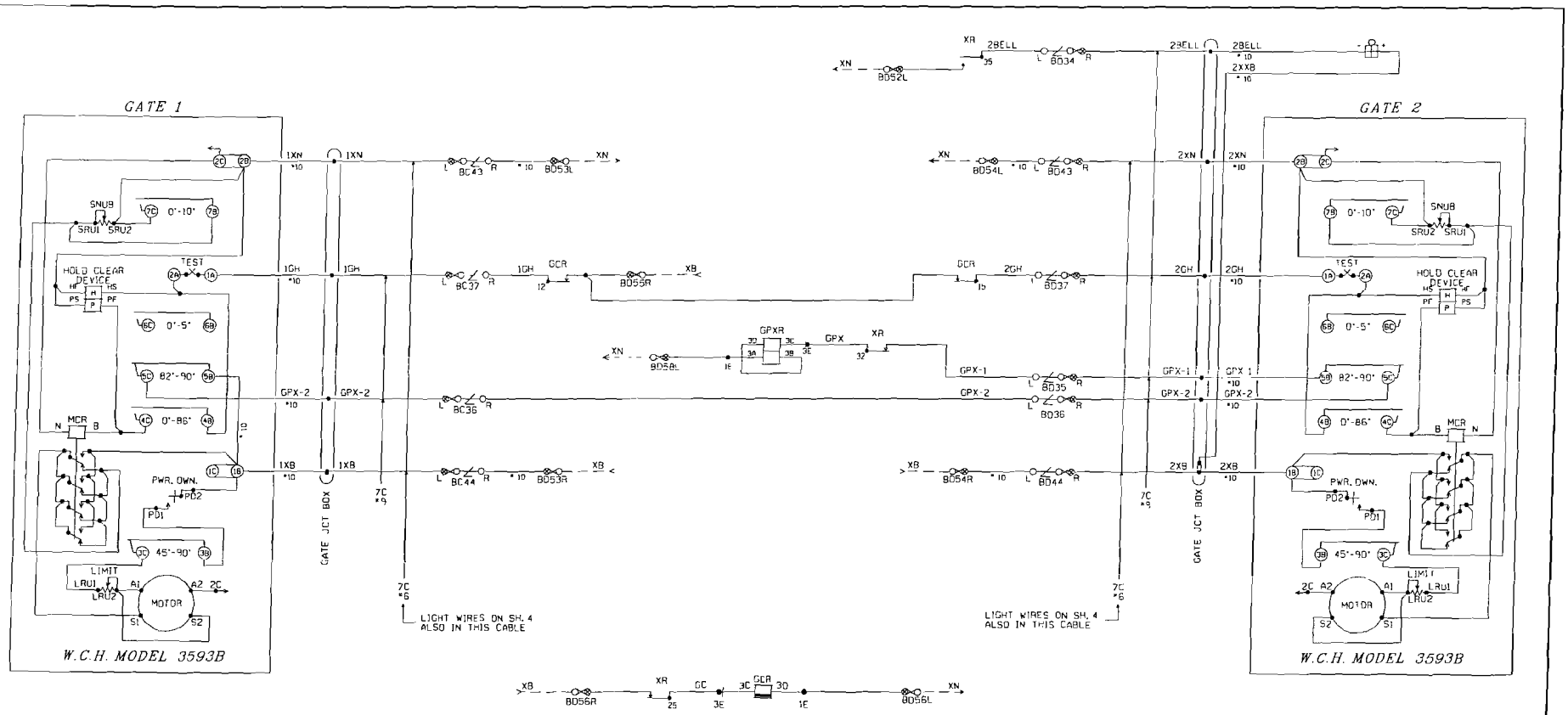

NOTES:
1. MAINTENANCE SWITCH NOT SHOWN.
2. GATE MECHS SHOWN IN CLEAR POSITION.

SIGNAL EXHIBIT

RailWorks Track Services®
4301 BRIDGETON INDUSTRIAL DR.
ST. LOUIS, MISSOURI 63044
(314) 291-2233 FAX (314) 291-2266

DESIGN NINE
11168 TESSON FERRY ROAD
SUITE 100
ST. LOUIS MO, 63123-6966
(314) 729-7600
ENGINEERING SERVICES FOR RAILROADS AND INDUSTRY

REV #	BY	DATE	DESCRIPTION

Drawn By:	JPG	Date:	07/18/2008
Checked By:	RSS/BER	CAD File:	8034-1.dgn
Scale:	NO SCALE	Drawing No.:	5 of 10

THE OPERATION OF THE CIRCUITS AND EQUIPMENT REPRESENTED HEREIN CANNOT BE FULLY CHECKED UNTIL ALL CIRCUITS AND DEVICES ARE CONNECTED TO FORM A COMPLETE SYSTEM, OR AN EFFECTIVE SUBSYSTEM. SUCH SYSTEM OR SUBSYSTEM MUST BE GIVEN COMPLETE CIRCUIT AND OPERATIONAL TESTS BEFORE BEING PLACED IN REGULAR OPERATION.

GATE MECHANISMS
EIFF ROAD
LIVELY GROVE, ILLINOIS

SIGNAL DETAILS
MARISSA, ILLINOIS
TRACKAGE TO SERVE:
PRAIRIE STATE GENERATING CO., LLC.

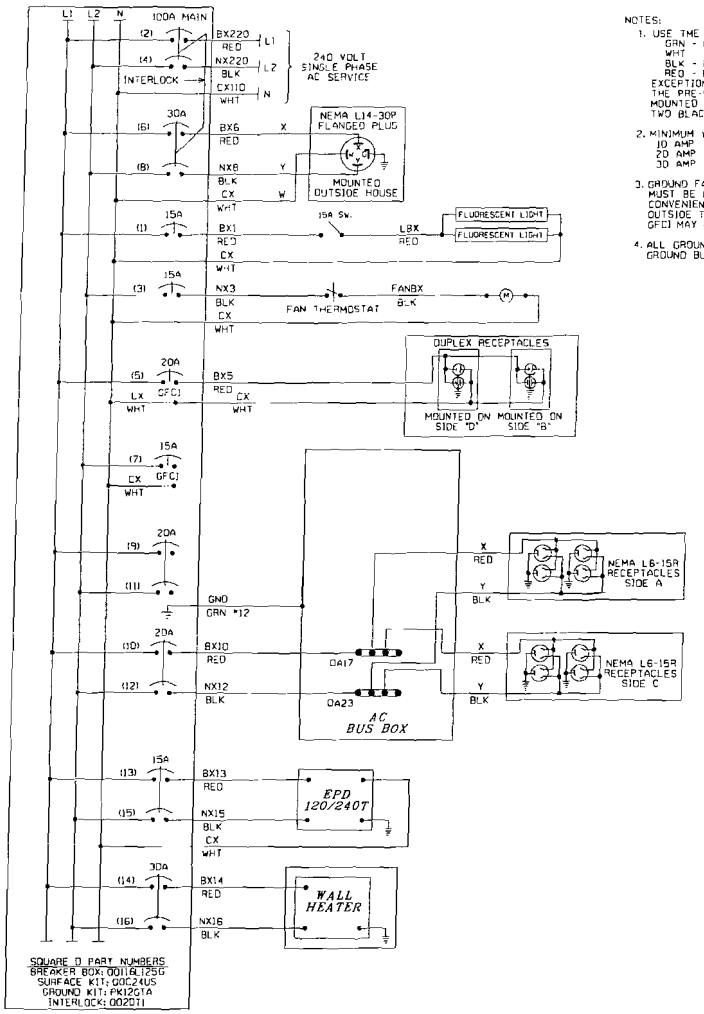

NOTES:

1. USE THE FOLLOWING COLOR CODE:
   GRN - GREEN - SAFETY EQUIPMENT GROUND
   WHT - WHITE - CX110 (NEUTRAL)
   BLK - BLACK - NX220 (L2)
   RED - RED - BX220 (L1)
   EXCEPTIONS TO THE ABOVE COLOR CODE ARE THE PRE-WIRED, SEALED ARRESTOR UNITS MOUNTED ON THE BREAKER BOX WHICH HAVE TWO BLACK AND ONE WHITE WIRE EACH.
2. MINIMUM WIRE SIZE
   10 AMP - NO. 14 AWG THHN OR THWN SOLID
   20 AMP - NO. 12 AWG THHN OR THWN SOLID
   30 AMP - NO. 10 AWG THHN OR THWN SOLID
3. GROUND FAULT INTERRUPT (GFCI) MUST BE USED ON ALL CIRCUITS SERVING CONVENIENCE OUTLETS AND ANY EQUIPMENT OUTSIDE THE BUNGALOW. RECEPTACLE MOUNTED GFCI MAY BE USED INSTEAD OF BREAKER TYPE.
4. ALL GROUND WIRES RUN TO BREAKER BOX GROUND BUS

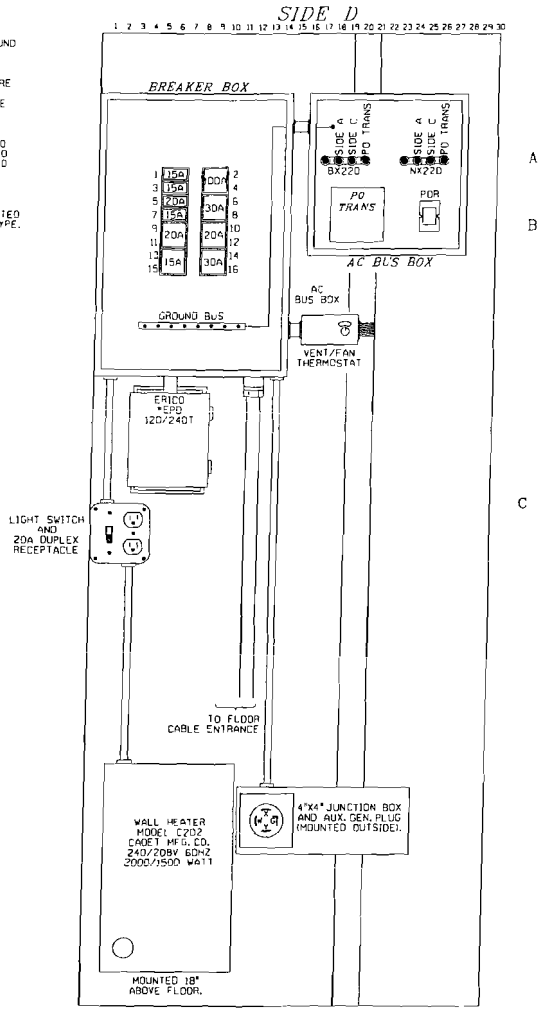

SIGNAL EXHIBIT

RailWorks Track Services®
4301 BRIDGETON INDUSTRIAL DR.
ST. LOUIS, MISSOURI 63044
(314) 291-2233 FAX (314) 291-2266

DESIGN NINE
11166 TESSON FERRY ROAD
SUITE 100
ST. LOUIS MO, 63123-6968
(314) 729-7600
ENGINEERING SERVICES FOR RAILROADS AND INDUSTRY

REV #	BY	DATE	DESCRIPTION

Drawn By:	JPG	Date:	07/18/2008
Checked By:	RSS/BER	CAD File:	8034-1.dgn
Scale:	NO SCALE	Drawing No.:	6 of 10

THE OPERATION OF THE CIRCUITS AND EQUIPMENT REPRESENTED HEREIN CANNOT BE FULLY CHECKED UNTIL ALL CIRCUITS AND DEVICES ARE CONNECTED TO FORM A COMPLETE SYSTEM, OR AN EFFECTIVE SUBSYSTEM. SUCH SYSTEM OR SUBSYSTEM MUST BE GIVEN COMPLETE CIRCUIT AND OPERATIONAL TESTS BEFORE BEING PLACED IN REGULAR OPERATION.

AC POWER DISTRIBUTION
EIFF ROAD
LIVELY GROVE, ILLINOIS

SIGNAL DETAILS
MARISSA, ILLINOIS
TRACKAGE TO SERVE:
PRAIRIE STATE GENERATING CO., LLC.

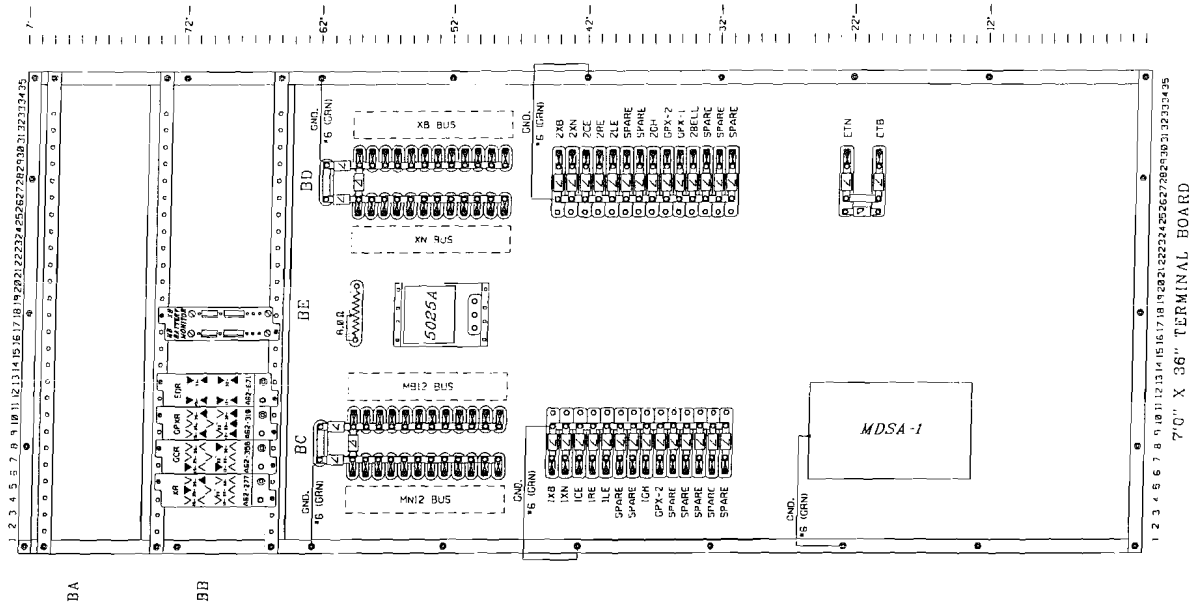

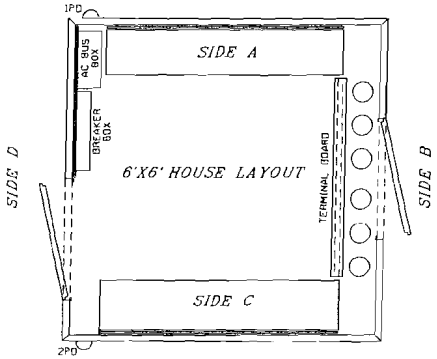

BATTERY BUS DETAILS

ROW BC

MN12 BUS (LEFT)			MB12 BUS (RIGHT)
MB BATT(-)	59		MB BATT(+)
BMR 71	58		MB BMON C
	57		
	56		
	55		
	54		
	53		
	52		
	51		
	50		
MDSA-1 BATT(-)	49		MDSA-1 BATT(+)
MB BMON (-)	48		MB BMON (+)

ROW BD

XN BUS (LEFT)			XB BUS (RIGHT)
XB BATT(-)	59		XB BATT(+)
	58		
STROBE (-)	57		AA41T
GCR 1E	56		XR 26
	55		GCR 1J
BC43L	54		BC44L
BC43R	53		BC44R
XR 34	52		
EOR 1E	51		GPXR 22
EOR 3I	50		GPXR 31
EOR 1I	49		GPXR 11
XB BMON (-)	48		XB BMON (+)

SIGNAL EXHIBIT

RailWorks Track Services®
4301 BRIDGETON INDUSTRIAL DR.
ST. LOUIS, MISSOURI 63044
(314) 291-2233 FAX (314) 291-2265

DESIGN NINE
11166 TESSON FERRY ROAD
SUITE 100
ST. LOUIS MO. 63123-6966
(314) 729-7600
ENGINEERING SERVICES FOR RAILROADS AND INDUSTRY

REV #	BY	DATE	DESCRIPTION

Drawn By:	JPG	Date:	07/18/2008
Checked By:	RSS/BER	CAD File:	8034-1.dgn
Scale:	NO SCALE	Drawing No.:	7 of 10

THE OPERATION OF THE CIRCUITS AND EQUIPMENT REPRESENTED HEREIN CANNOT BE FULLY CHECKED UNTIL ALL CIRCUITS AND DEVICES ARE CONNECTED TO FORM A COMPLETE SYSTEM, OR AN EFFECTIVE SUBSYSTEM. SUCH SYSTEM OR SUBSYSTEM MUST BE GIVEN COMPLETE CIRCUIT AND OPERATIONAL TESTS BEFORE BEING PLACED IN REGULAR OPERATION.

TERMINAL BOARD
EIFF ROAD
LIVELY GROVE, ILLINOIS

SIGNAL DETAILS
MARISSA, ILLINOIS
TRACKAGE TO SERVE:
PRAIRIE STATE GENERATING CO., LLC.

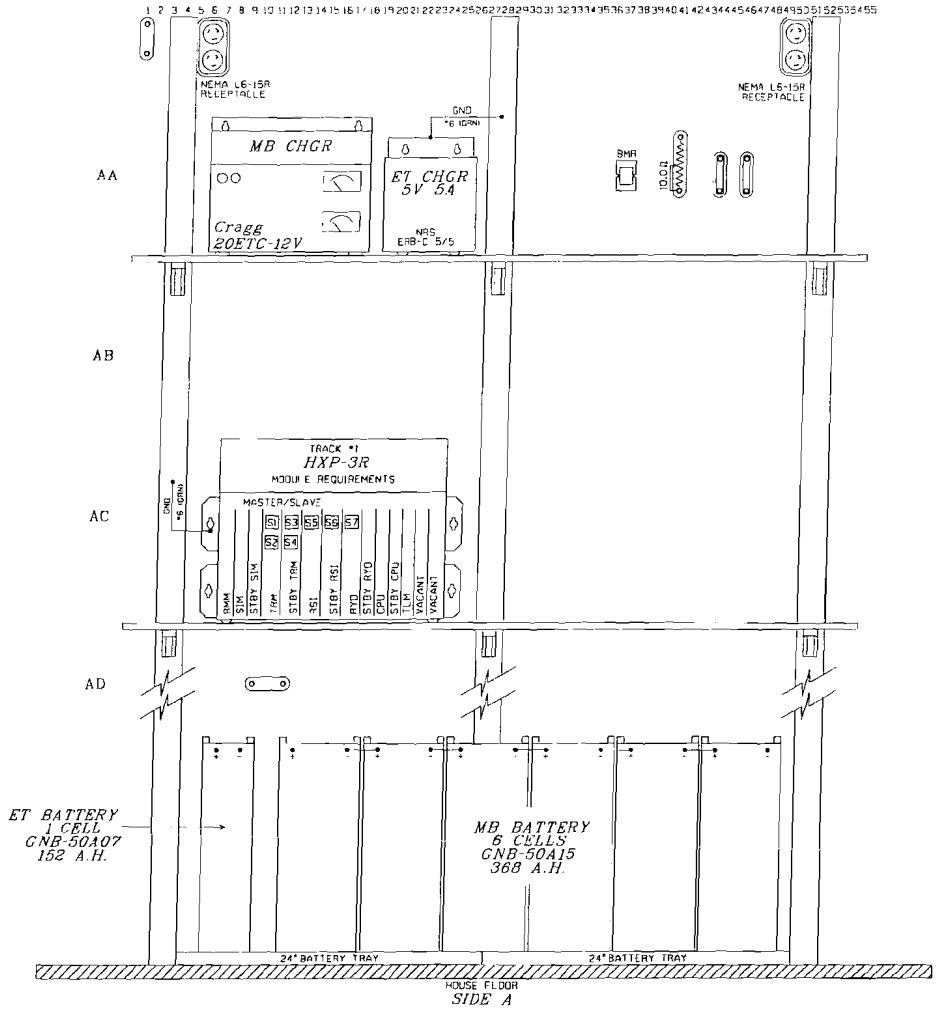

SIGNAL EXHIBIT

RailWorks Track Services
4301 BRIDGETON INDUSTRIAL DR.
ST. LOUIS, MISSOURI 63044
(314) 291-2233 FAX (314) 291-2266

DESIGN NINE
11166 TESSON FERRY ROAD
SUITE 100
ST. LOUIS MO, 63123 6966
(314) 729-7600
ENGINEERING SERVICES FOR RAILROADS AND INDUSTRY

REV #	BY	DATE	DESCRIPTION

Drawn By:	JPG	Date:	07/18/2008
Checked By:	RSS/BER	CAD File:	8034-1.dgn
Scale:	NO SCALE	Drawing No.:	8 of 10

THE OPERATION OF THE CIRCUITS AND EQUIPMENT REPRESENTED HEREIN CANNOT BE FULLY CHECKED UNTIL ALL CIRCUITS AND DEVICES ARE CONNECTED TO FORM A COMPLETE SYSTEM, OR AN EFFECTIVE SUBSYSTEM. SUCH SYSTEM OR SUBSYSTEM MUST BE GIVEN COMPLETE CIRCUIT AND OPERATIONAL TESTS BEFORE BEING PLACED IN REGULAR OPERATION.

SIDE A HOUSE LAYOUT
EIFF ROAD
LIVELY GROVE, ILLINOIS

SIGNAL DETAILS
MARISSA, ILLINOIS
TRACKAGE TO SERVE:
PRAIRIE STATE GENERATING CO., LLC.

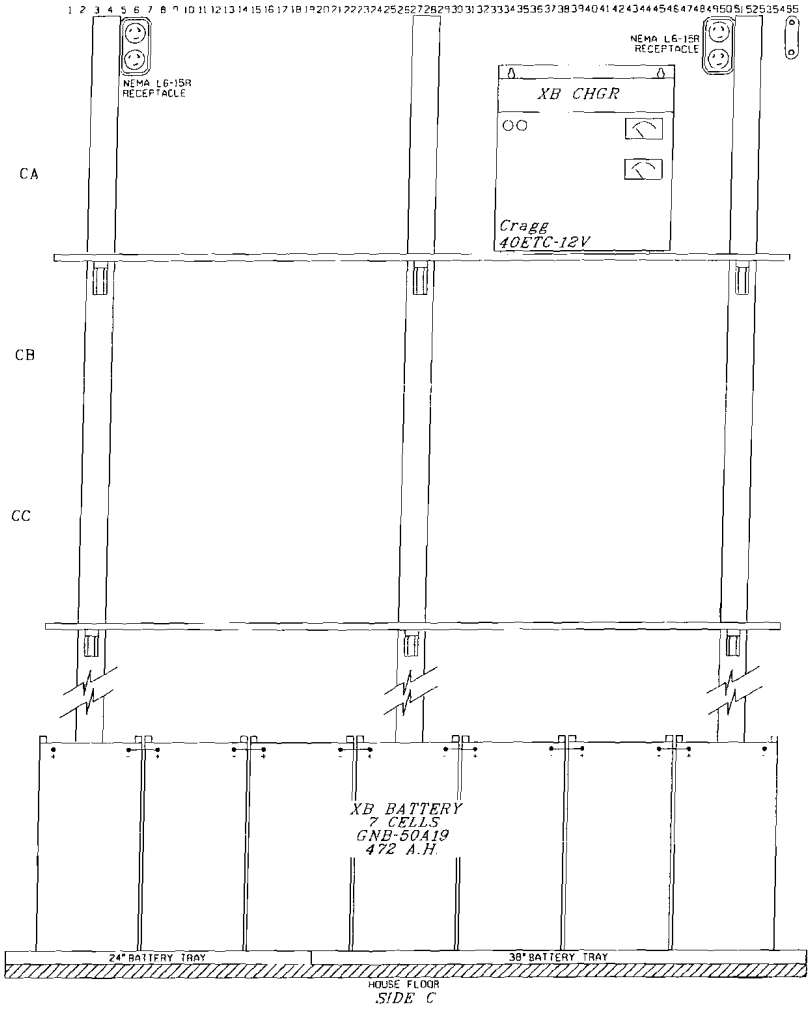

SIGNAL EXHIBIT

RailWorks Track Services®
4301 BRIDGETON INDUSTRIAL DR
ST. LOUIS, MISSOURI 63044
(314) 291-2233 FAX (314) 291-2266

DESIGN NINE
11166 TESSON FERRY ROAD
SUITE 100
ST. LOUIS MO, 63123-6966
(314) 729-7600
ENGINEERING SERVICES FOR RAILROADS AND INDUSTRY

REV #	BY	DATE	DESCRIPTION

Drawn By:	JPG	Date:	07/18/2008
Checked By:	RSS/BER	CAD File:	8034-1.dgn
Scale:	NO SCALE	Drawing No.:	9 of 10

THE OPERATION OF THE CIRCUITS AND EQUIPMENT REPRESENTED HEREIN CANNOT BE FULLY CHECKED UNTIL ALL CIRCUITS AND DEVICES ARE CONNECTED TO FORM A COMPLETE SYSTEM, OR AN EFFECTIVE SUBSYSTEM. SUCH SYSTEM OR SUBSYSTEM MUST BE GIVEN COMPLETE CIRCUIT AND OPERATIONAL TESTS BEFORE BEING PLACED IN REGULAR OPERATION.

SIDE C HOUSE LAYOUT
EIFF ROAD
LIVELY GROVE, ILLINOIS

SIGNAL DETAILS
MARISSA, ILLINOIS
TRACKAGE TO SERVE:
PRAIRIE STATE GENERATING CO., LLC.

YELLOW OUT
RED IN

Per 9/28/08 Conference Call

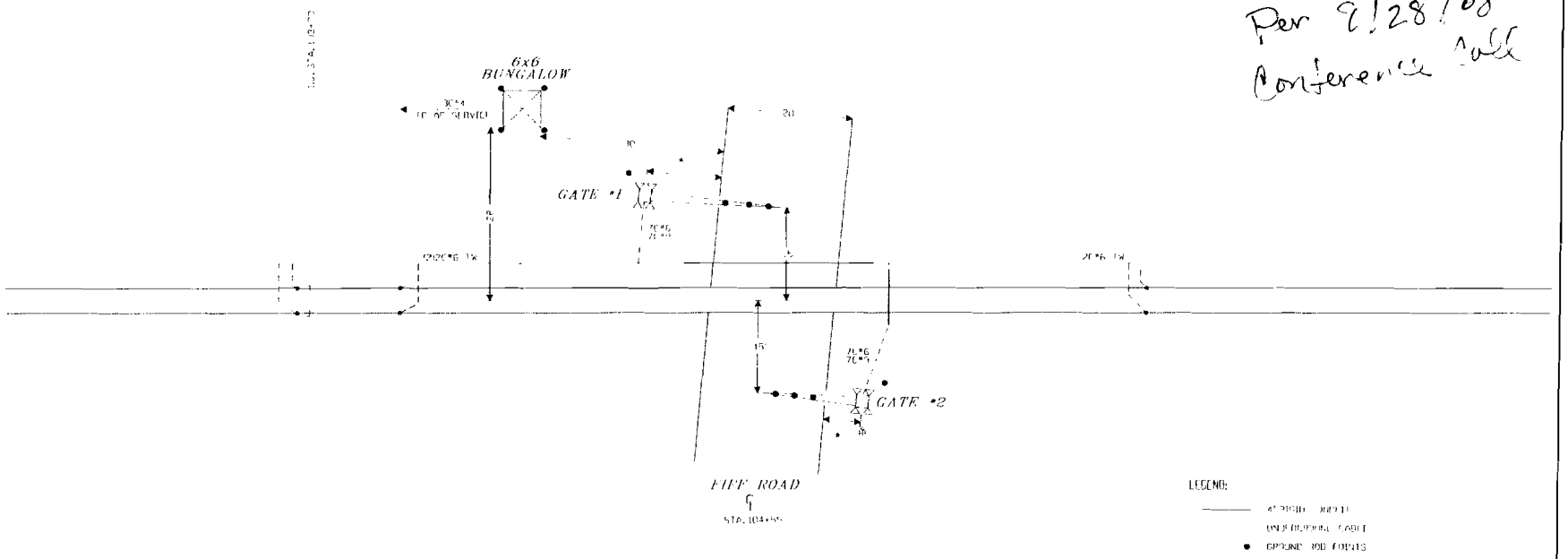

* Gates placement from edge of road to center of mast.
minimum 9'
maximum 12'

SIGNAL EXHIBIT

RailWorks Track Services®
4201 BRIDGETON, P.O. BOX 5826
ST. LOUIS, MISSOURI 63115
(314) 381-2233 FAX (314) 381-2765

DESIGN NINE
11166 TESSON FERRY ROAD
SUITE 100
ST. LOUIS MO, 63123-6866
(314) 729-3600
ENGINEERING SERVICES FOR RAILROADS AND INDUSTRY

REV #	BY	DATE	DESCRIPTION

Drawn By:	JPG	Date:	07/18/2008
Checked By:	RSS/BER	CAD File:	8034-1.dgn
Scale:	NO SCALE	Drawing No.:	10 of 10

THE OPERATION OF THE CIRCUITS AND EQUIPMENT REPRESENTED HEREIN CANNOT BE FULLY CHECKED UNTIL ALL CIRCUITS AND DEVICES ARE CONNECTED TO FORM A COMPLETE SYSTEM, OR AN EFFECTIVE SUBSYSTEM. SUCH SYSTEM OR SUBSYSTEM MUST BE GIVEN COMPLETE CIRCUIT AND OPERATIONAL TESTS BEFORE BEING PLACED IN REGULAR OPERATION

CABLE & FOUNDATION PLAN
EIFF ROAD
LIVELY GROVE, ILLINOIS

SIGNAL DETAILS
MARISSA, ILLINOIS
TRACKAGE TO SERVE:
PRAIRIE STATE GENERATING CO., LLC.

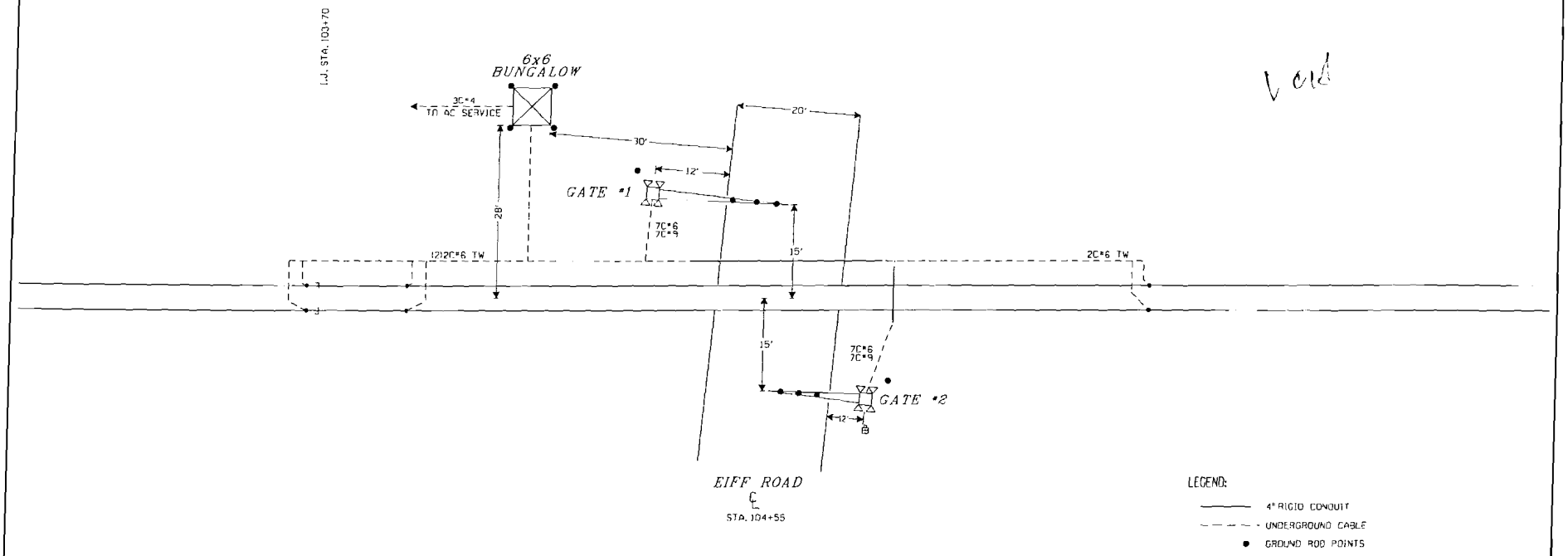

Void

SIGNAL EXHIBIT

RailWorks Track Services®
4301 BRIDGETON INDUSTRIAL DR
ST. LOUIS, MISSOURI 63044
(314) 291-2233 FAX (314) 291-2266

DESIGN NINE
11165 TESSON FERRY ROAD
SUITE 100
ST. LOUIS MO. 63123-6966
(314) 729 7600
ENGINEERING SERVICES FOR RAILROADS AND INDUSTRY

REV #	BY	DATE	DESCRIPTION

Drawn By:	JPG	Date:	07/18/2008
Checked By:	RSS/BER	CAD File:	8034-1.dgn
Scale:	NO SCALE	Drawing No.:	10 of 10

THE OPERATION OF THE CIRCUITS AND EQUIPMENT REPRESENTED HEREIN CANNOT BE FULLY CHECKED UNTIL ALL CIRCUITS AND DEVICES ARE CONNECTED TO FORM A COMPLETE SYSTEM, OR AN EFFECTIVE SUBSYSTEM. SUCH SYSTEM OR SUBSYSTEM MUST BE GIVEN COMPLETE CIRCUIT AND OPERATIONAL TESTS BEFORE BEING PLACED IN REGULAR OPERATION.

CABLE & FOUNDATION PLAN
EIFF ROAD
LIVELY GROVE, ILLINOIS

SIGNAL DETAILS
MARISSA, ILLINOIS
TRACKAGE TO SERVE:
PRAIRIE STATE GENERATING CO., LLC.

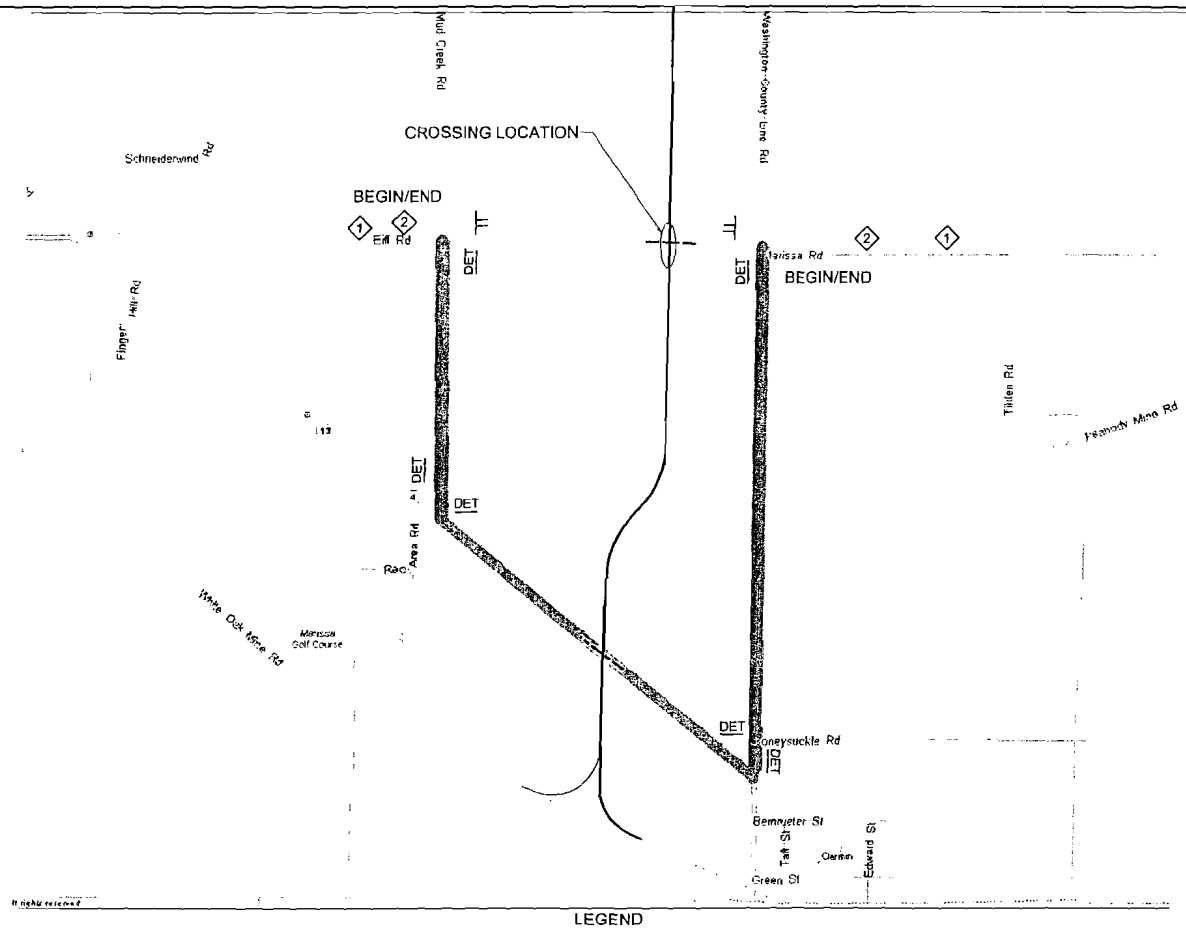

EQUIPMENT

2	TYPE III BARRICADE W/ LIGHT & RD CLOSED AHEAD LTO
4	TYPE III BARRICADE W/ LIGHT & RD CLOSED AHEAD
2	ROAD CLOSED AHEAD W/L
2	DETOUR AHEAD
6	DETOUR —— / ——

NOTE: THE RAIL WORK SHOWN IS NOT TO SCALE AND ONLY SHOWS AN APPROXIMATE CROSSING LOCATIONS

LEGEND

⊤⊤	TYPE III BARRICADE W/ LIGHT & RD CLOSED AHEAD LOCAL TRAFFIC ONLY	◇1	ROAD CLOSED AHEAD
DET	DETOUR	◇2	DETOUR AHEAD
DET	DETOUR		

EIFF ROAD DETOUR MAP

DETOUR EXHIBIT

RailWorks Track Services®
4301 BRIDGETON INDUSTRIAL DR.
ST. LOUIS, MISSOURI 63044
(314) 291-2233 FAX (314) 291-2266

DESIGN NINE
11166 TESSON FERRY ROAD
SUITE 100
ST. LOUIS MO, 63123-8966
(314) 729-7600
ENGINEERING SERVICES FOR RAILROADS AND INDUSTRY

REV #	BY	DATE	DESCRIPTION

Drawn By:	JPG	Date:	07/18/2008
Checked By:	RSS/BER	CAD File:	8034-1.dgn
Scale:	NO SCALE	Drawing No.:	1 of 1

- ISSUED -
FOR CONSTRUCTION

DETOUR PROPOSAL
HIGHWAY TECHNOLOGIES

EIFF ROAD
MARISSA, ILLINOIS
TRACKAGE TO SERVE:
PRAIRIE STATE GENERATING CO., LLC.