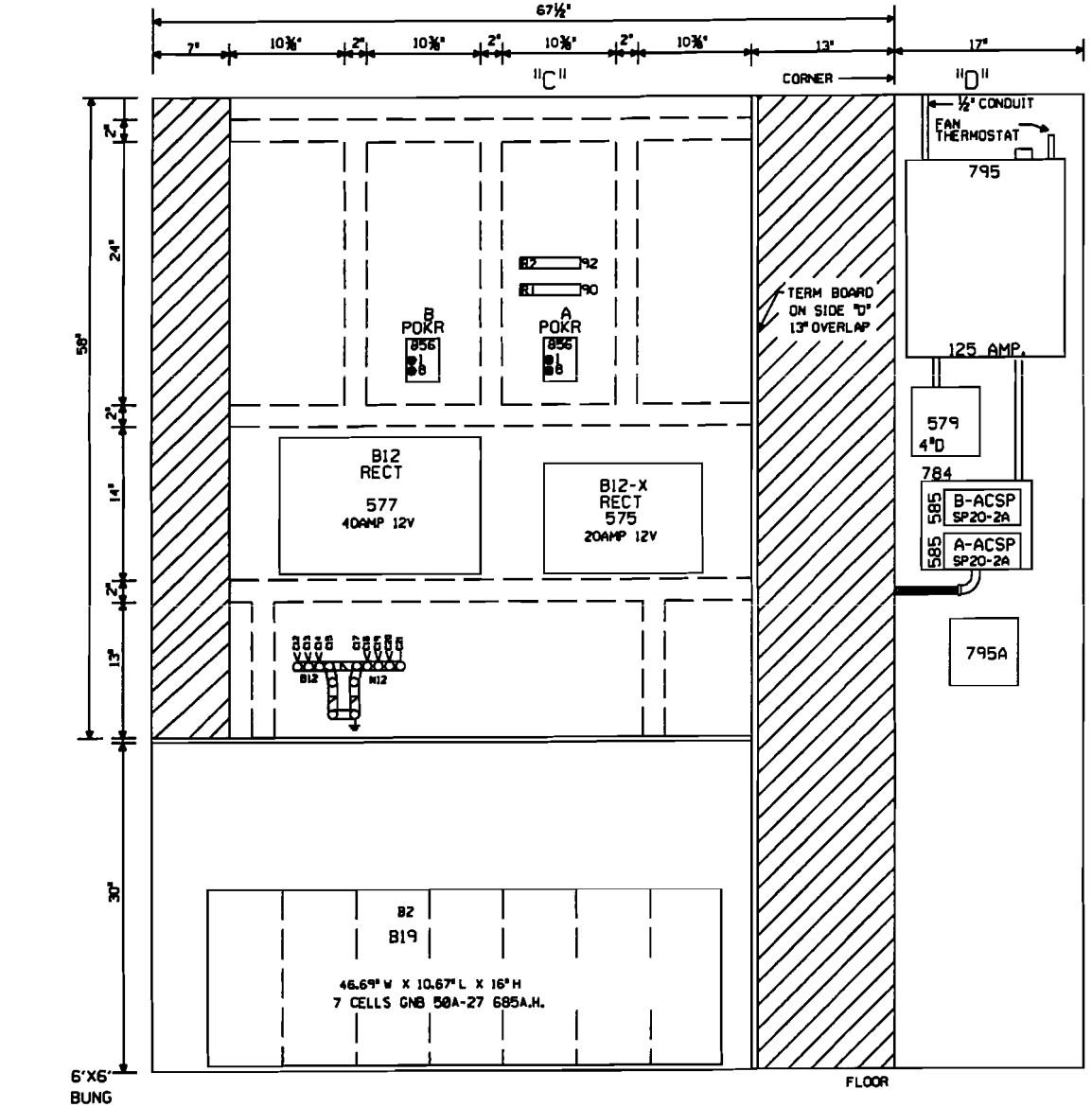


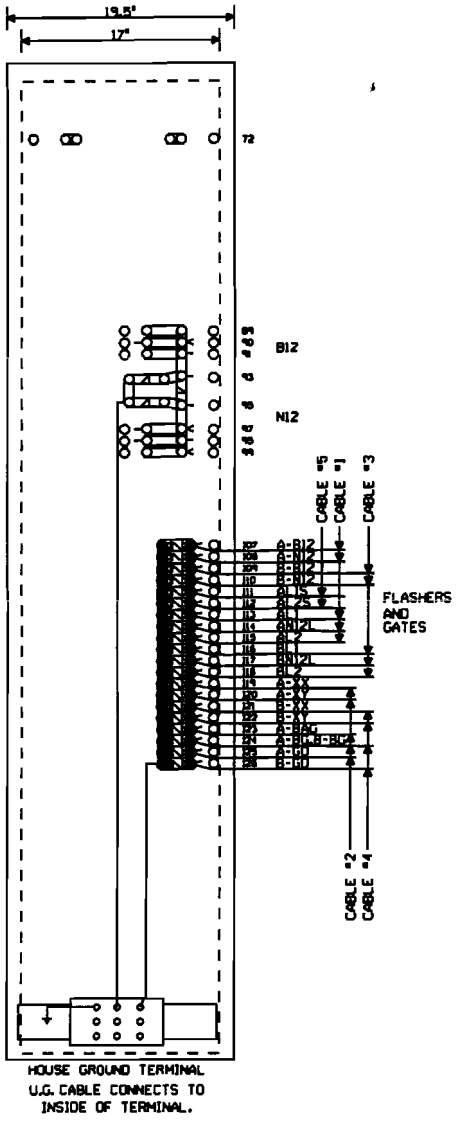


NOTE: ALL DIMENSIONS SHOWN ARE APPROXIMATE.

0 1 2 3 4 FEET

SCALE: 1.5 INCHES = 1 FOOT

MARENGO, ILLINOIS
RITZ ROAD
M.P. 67.28
BELVIDERE SUBDIVISION
D.O.T.#174 575C

| | | | | | | | |
|---|---|---|---|---|---|---|---|
| REV. 11-3-06 INSTALLED FLASHERS, GATES, AND CWT. M.P. 67.28 W.O. # 45621 REC. #12810 1-31-06 DJE/WITT/ RLT /JTB | MODIFICATION LEVEL | | UNION PACIFIC SAFETY SIGNAL DESIGN | DES: JTB | UNION PACIFIC RAILROAD MARENGO, ILLINOIS HIGHWAY CROSSING SIGNALS CONTROL CIRCUITS Office of Sr. AVP Engineering-Signal/TCO OMAHA NEBR. | DATE 4-13-04 | |
| | Q.A. LAST LEVEL CHK'D. | DH | | DIG: JTB | | SHEET 9 | |
| | LAST LEVEL MOD. THIS TYP. | DH | | CHK: RLT | | DWG 67.28 | |
| | LAST LEVEL BY DESIGNER. | DI | | A.F.E. 45621 | | BEV-RTE | |
| | CHANGED FROM TYP.? Y/N | Y | | ID: BEV6728.9x | | | |

(REV. 01.01.04) (CFC.9 )

11-22-33

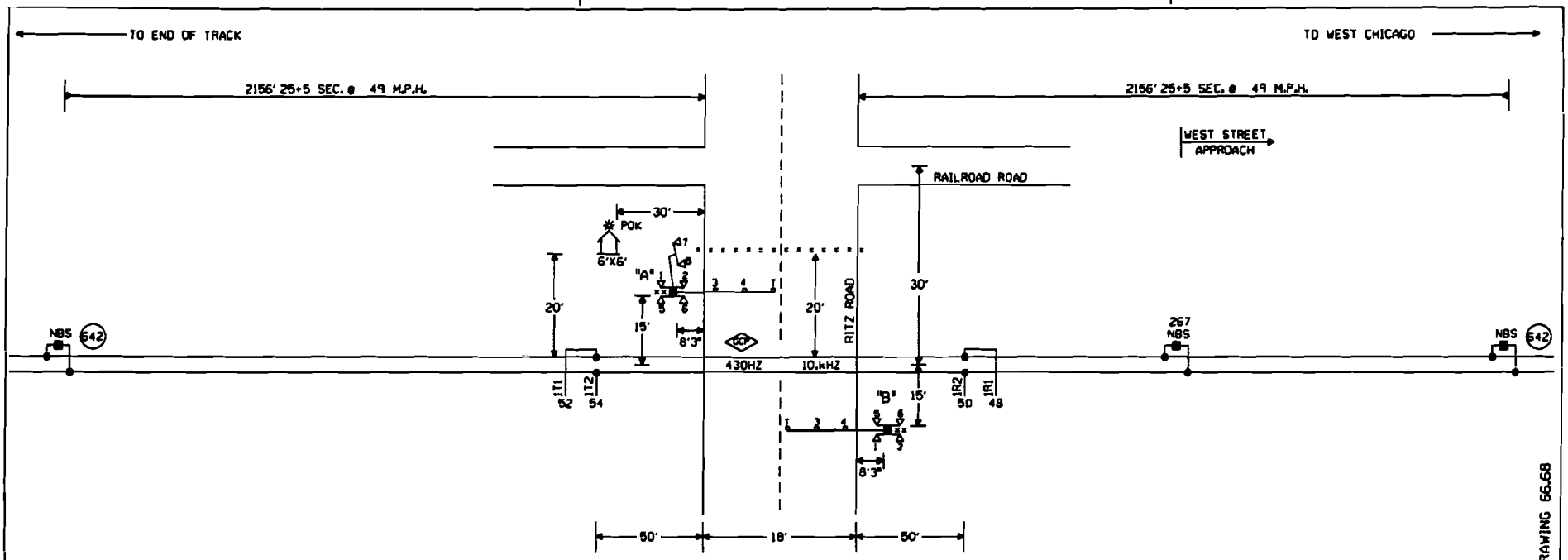


CONNECTS TO DRAWING 66.68

NOTES:

⊗ = TWISTED WIRES
INSULATED 1 TWIST PER FT.
ALL TRACK WIRES 2C. #6

TRANSMITTER AND RECEIVER LEADS TO BE SEPARATED BY AT LEAST 12" IN TRENCH. LENGTHS SHOULD NOT EXCEED MANUFACTURES RECOMMENDATION.

TOP OF FOUNDATION TO BE AT SAME ELEVATION AS THE SURFACE OF THE TRAVELED WAY & NO MORE THAN 4" ABOVE THE SURFACE OF THE GROUND.

ALL BUNGALOW WIRING TO BE #16 AWG FLEX UNLESS OTHERWISE SPECIFIED EXCEPT ALL GROUND WIRE TO BE #6 AWG FLEX OR LARGER.

ALL WIRING IN GATE MECHANISM TO BE #10 "AWG FLEX".

REFER TO UP STANDARD DWG FOR BUNGALOW GROUNDING.

DO NOT USE 7 CELLS OF B12 BATTERY UNLESS REQUIRED TO MAINTAIN MINIMUM LAMP VOLTAGE.

ALL LIGHTS TO BE 12" ROUNDELS.

= = = = = = 4" X 40' CONDUIT

LIGHTS: LED LIGHTS

GATE A: 17'
GATE B: 17'

CRTU CELLEMETRY

xx = BELL

W ←—○—→ E

MARENGO, ILLINOIS
RITZ ROAD
M.P. 67.28
BELVIDERE SUBDIVISION
D.O.T.#174 575C

| | | | |
|---|---|---|---|
| 2 REV. 07-02-08 INSTALL FLASHERS & GATES WITH CWT AT M.P. 66.20. WO#84098 REC#15235 05-12-08 GRK JWS/MST/SSC/JJF | REV. 11-3-06 INSTALLED FLASHERS, GATES, AND CWT. M.P. 67.28 W.O. # 45621 REC. #12810 1-31-06 RLT DJE/MTT/ /JTB | MODIFICATION LEVEL | |
| | | G.A. LAST LEVEL CHK'D. | DH |
| | | LAST LEVEL MOD. THIS TYP. | DH |
| | | LAST LEVEL BY DESIGNER. | DI |
| | | CHANGED FROM TYP.? Y/N | Y |

UNION PACIFIC SAFETY ASSOCIATES SAFETY SIGNAL DESIGN

DES: JTB
DIG: JTB
CHK: RLT
A.F.E. 45621
ID: BEV6728.1X

UNION PACIFIC RAILROAD
MARENGO, ILLINOIS
HIGHWAY CROSSING SIGNALS
CONTROL CIRCUITS
Office of Sr. AVP Engineering-Signal/TCO OMAHA NEBR.

DATE 4-13-04
SHEET 1
DWG 67.28
BEV-RTE

(REV. 01.01.04) (ITKBG.1)

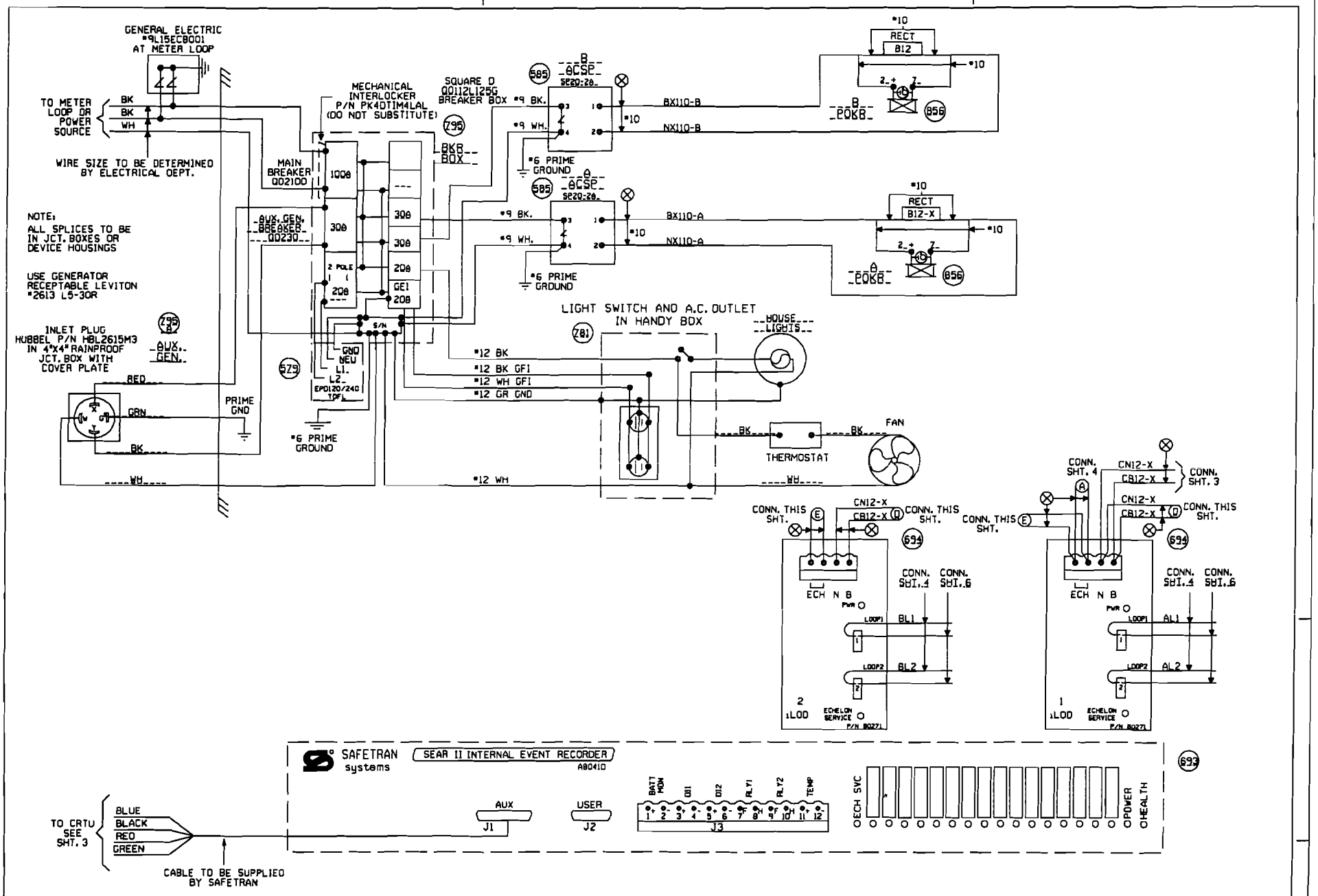


MARENGO, ILLINOIS
RIIZ 8080
M.P. 67.28
BELVIDERE SUBDIVISION
D.O.T.*174.5250

| | | | | | |
|---|---|---|---|---|---|
| REV. 11-3-06 INSTALLED FLASHERS, GATES, AND CWT. M.P. 67.28 W.O. * 45621 REC. *12810 1-31-06 DJE/WITT/ /JTB | MODIFICATION LEVEL | | UNION PACIFIC SAFETY SIGNAL DESIGN | DES: JTB | UNION PACIFIC RAILROAD MARENGO, ILLINOIS HIGHWAY CROSSING SIGNALS CONTROL CIRCUITS Office of Sr. AVP Engineering-Signal/TCO OMAHA NEBR. |
| | Q.A. LAST LEVEL CHK'D. | DB | | DIG: JTB | DATE 4-13-04 |
| | LAST LEVEL MOD. THIS TYP. | DB | | CHK: BLT | SHEET 2 |
| | LAST LEVEL BY DESIGNER. | DI | | A.F.E. 45621 | DWG 67.28 |
| | CHANGED FROM TYP.? Y/N | -Y- | | ID= BEV8728.2% | BEV-RTE |

(REV. 01.01.04) (SEABAC.2)

3-14-25-35-46-55

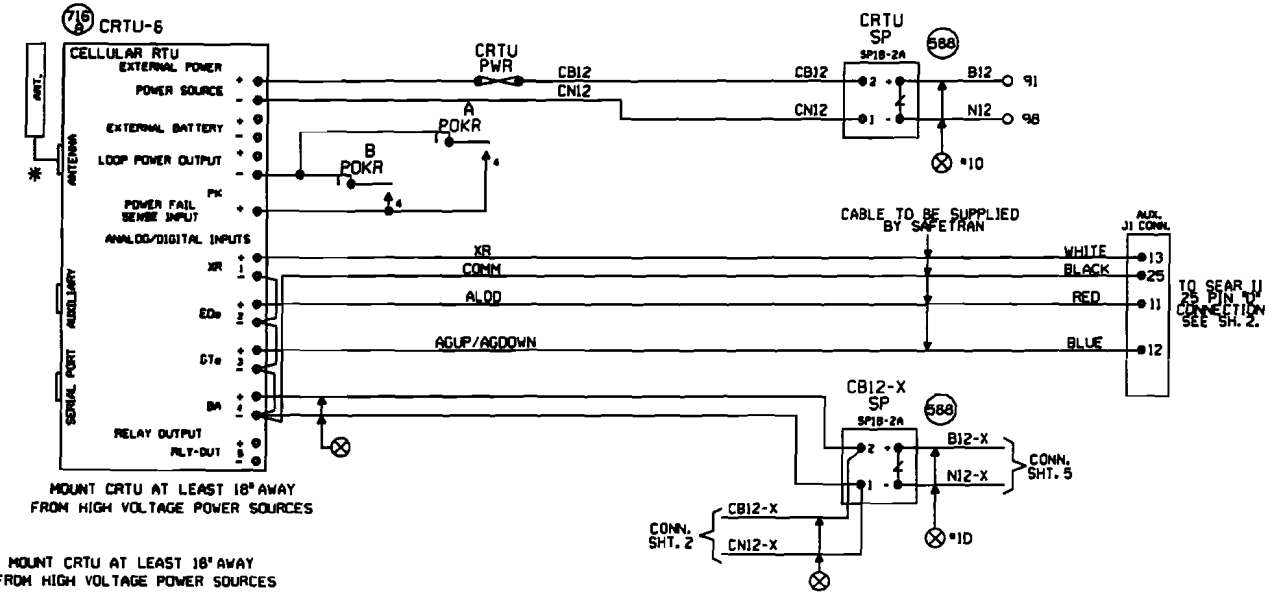


MOUNT CRTU AT LEAST 18" AWAY FROM HIGH VOLTAGE POWER SOURCES

NOTES:

ALL DIODES 1N5060 OR 1N4004 UNLESS OTHERWISE NOTED.

* MOUNT ANTENNA ON TOP OF HOUSE.
  INSTALL ANTENNA CABLE AND CHOKE PER TECH BULLENTIN #99-0015-00

ALL WIRES #18 UNLESS OTHERWISE NOTED.

ALL UNUSED 'NC' INPUTS MUST BE TIED HIGH TO BATTERY

ALL UNUSED ANALOG INPUTS MUST BE TIED HIGH TO BATTERY

ALL UNUSED 'NO' INPUTS MUST BE DISCONNECTED

NORMAL STATE FOR ANALOG CHANNELS IS EQUAL TO THE STORED NOMINAL VOLTAGE +120% OR -81%

CRTU FRONT PANEL DISPLAY CHART INDICATES NORMAL STATE

■ DIGITAL INPUT HIGH, OR POWER FAIL INPUT CLOSED □ DIGITAL INPUT LOW, OR POWER FAIL INPUT OPEN

■ L ← LATCH IS SET BECAUSE CRTU DETECTED AN ALARM CONDITION
12.06V L ←

'sRUN MODE' 'sRUN MODE-SILENT'
↑ ↑ CRTU RADIO IS DISABLED. REPROGRAM CRTU WITH LAPTOP.

ANALOG AND AC INPUT MODULES AND SURGE PROTECTORS MUST BE MOUNTED LESS THAN 18" FROM CRTU

ANALOG MODULES CONVERT DC VOLTAGE TO A SQUARE WAVE. A WORKING ANALOG MODULE WILL HAVE 4.5VDC TO 8.0VDC BETWEEN 5VOUT+ AND 6VOUT-. WHERE, 0VOLTS = 0HZ OUT. 30VOLTS = 10KHZ OUT, AND 15VOLTS = 5KHZ OUT

MAKE SURE CRTU IS PROGRAMMED WITH CALIBRATION SETTINGS.

CRTU CH4 CAN BE CONNECTED TO EITHER SP18 OR EQUIPMENT SIDE OF MDSAI, TAB 565

## UNIT INSTALLATION AND SETUP

R.R. SITE ID WHERE: SSSS = 4 CHARACTER SUBDIVISION ID. FILL WITH PRECEDING ZEROS AS REQUIRED. THE MAIN TRACK SUBDIVISION ID# IS IN THE CURRENT TIMETABLE. INDUSTRIAL LEADS, LEASED, AND LEAD TRACKS LISTED WITHIN THE SUBDIVISION MAY HAVE THEIR OWN UNIQUE SUBDIVISION ID#. ALWAYS REFER TO CURRENT PRINTED COPY OF THE TIMETABLE.
LLLLLLLL = 8 CHARACTERS USE DOT# AT CROSSINGS, AND
WOLLLLLL = USE 'WO' THEN MP# AT WAYSIDE LOCATIONS.
EXAMPLE = 0788WO1801.SUT
HBLLLLLL = USE 'HB' THEN MP# AT HBO SITES.
EXAMPLE = 0100-HB55.621X
THE MP# MUST USE A DECIMAL POINT TO SEPARATE NUMBERS. FILL WITH PRECEDING DASHES AS REQUIRED.
AA = 2 CHARACTER STATE NAME FOR ALL LOCATIONS.
MUST BE 14 CHARACTERS LONG, NO SPACES ALLOWED.

| | |
|---|---|
| SITE IDENTIFIER: SSSSLLLLLLLLAA | 0015-174575CIL |
| OPERATION TO RESUME: | RUN |
| SIGNAL STRENGTH dBm | |
| CARRIER ID | |
| FIRMWARE VERSION | 2.3. |
| SERIAL NUMBER | |
| BOOT VERSION: | |
| CMM VERSION: | |
| MIN ASSIGNMENT | |
| ESN (MICROBURST ONLY) | |
| CONFIGURATION SET | CELLEMETRY |
| SILENCE INTERVAL | 60 MINUTES |
| HEALTHCHECK INTERVAL | EVERY 2 DAYS |
| ALARM DEFER DELAY | 240 MINUTES (4 HOURS) |
| SIGNAL STATUS | |
| SCADANET STATUS | |
| CALIBRATION CONSTANT CH1 | |
| CALIBRATION CONSTANT CH2 | |
| CALIBRATION CONSTANT CH3 | |
| CALIBRATION CONSTANT CH4 | |
| CALIBRATION CONSTANT PS | |

FIELD PROVIDES: SAMPLED NOMINAL VOLTAGES, SCADANET STATUS CALIBRATION CONSTANTS, SERIAL NUMBER, AND SIGNAL STATUS.

## CHANNEL SETUP - STANDARD CONFIGURATION 32:XR,EO,GT,BA

| CHANNEL NORMAL STATE | SENSE (NO/NC) | NAME FUNCTION | RECOGNITION DELAY SECONDS ACTIVE | RECOGNITION DELAY SECONDS NORMAL | RETURN TO NORMAL | REPORTING MODE | ALARM LINKED CHANNEL | ALARM LINKED CRITERIA | EVENT LOGGING ENABLED OPTIONS |
|---|---|---|---|---|---|---|---|---|---|
| POWER FAIL (CH5) ■ | POWER FAIL DETECT NO | PFin-PK AC POWER FAIL | 7,200 ALARM | 300 NORMAL | ENABLED | ALERT | DISABLED | N/A | |
| CH1 ■ | DIGITAL INPUT NC | CH1-XR XR DOWN TO LONG | 1,800 ALARM | 1 NORMAL | ENABLED | ALERT | DISABLED | N/A | ANALOG VALUE SENT |
| CH2 ■ | DIGITAL INPUT NO | CH2-EO LIGHT OUT | 120 ALARM | 10 NORMAL | ENABLED | ALERT | DISABLED | N/A | |
| CH3 ■ | DIGITAL INPUT NO | CH3-GT GATES NOT UP/DOWN | 120 ALARM | 10 NORMAL | ENABLED | ALERT | DISABLED | N/A | |
| CH4 STORED NOMINAL VOLTAGE | ANALOG INPUT N/A | CH4-Ba/Y BATTERY MONITOR BATTERY LOW | 600 ALARM | 1200 NORMAL | ENABLED | ALERT W/UPDATE | DISABLED | N/A | DIGITAL EVENTS |
| POWER SOURCE (CH6) | ANALOG INPUT N/A | PS-Ba/Y BATTERY MONITOR BATTERY LOW | 600 ALARM | 1200 NORMAL | ENABLED | ALERT W/UPDATE | DISABLED | N/A | PFin-PK CH1-XR CH2-EO CH3-GT |

| ANALOG CHANNEL | USEFUL RANGE VOLTS LOW | USEFUL RANGE VOLTS HIGH | DISPLAYED RANGE VOLTS LOW | DISPLAYED RANGE VOLTS HIGH | RELATIVE ALARM POINT LOW | RELATIVE ALARM POINT HIGH | ABSOLUTE ALARM POINT LOW | ABSOLUTE ALARM POINT HIGH | AUTOMATIC UPDATE INTERVAL | STORED NOMINAL VOLTAGE | SAMPLED NOMINAL VOLTAGE |
|---|---|---|---|---|---|---|---|---|---|---|---|
| | | | | | | | | | | | |
| | | | | | | | | | | | |
| | | | | | | | | | | | |
| CH4 | 0.0 | 30.00 | 0.0 | 30.00 | 81% | 120% | 10.0 | 29.0 | 14 DAYS | 12.69 | |
| POWER SOURCE | 0.0 | 30.00 | 0.0 | 30.00 | 81% | 120% | 10.0 | 29.0 | 14 DAYS | 12.69 | |

| RELAY OUTPUT | NAME | ACTIVE | NORMAL | PULSE DURATION | |
|---|---|---|---|---|---|
| | RLY-OUT | SET-UP-OPEN | CLR-ON-CLOSE | 15 SECONDS | SwCfg Ver: 2.3.3 REV'D 9-20-02 |

## MAINTENANCE OPERATIONS

TO START OR ABORT ANY PROCEDURE

1. PRESS THE 'CANCEL' BUTTON FIRST.

WHEN RESPONDING TO A CALL, PUT THE CRTU IN THE 'SILENCE ALARMS' MODE

1. PRESS 'SELECT' AND THEN '+ ARROW' BUTTON UNTIL
   DISPLAY: ACTION?
   SILENCE ALARMS
2. PRESS THE 'SELECT' BUTTON TWICE
3. CORRECT PROBLEM AND SIMULATE NORMAL TRAIN MOVEMENT THROUGH THE LOCATION
4. EXAMINE EACH CHANNEL ON THE CRTU
5. PRESS THE '+/- ARROW' BUTTON
   VERIFY ALL CHANNELS INDICATE A NORMAL STATE
   NORMAL STATES ARE ON THE CHANNEL SETUP CHART

CLEAR TIMERS, LATCHES AND SEND ALL NORMAL

1. DO STEPS #1 - #5 ABOVE, AND PRESS 'CANCEL'.
2. PRESS 'SELECT' AND THEN '- ARROW' BUTTON UNTIL
   DISPLAY: ACTION?
   SERVICE MODE
3. PRESS 'SELECT' AGAIN TO RESET TIMERS, AND IF
   DISPLAY: SERVICE MODE
   ALL NORMAL
4. PRESS 'SELECT' AGAIN TO CLEAR LATCHES, AND SEND ALL NORMAL. SKIP STEPS #5-#6.
5. HOWEVER, IF ALARMS ARE NOT CLEARED:
   DISPLAY: SERVICE MODE
   ALARMS PENDING/PRESENT
6. PRESS 'CANCEL', CORRECT PROBLEM AND REPEAT STEPS #2 THRU #5 UNTIL ALL NORMAL SENT.

TO CANCEL THE 'SILENCE ALARMS' MODE

1. PRESS 'SELECT' AND THEN '+ ARROW' BUTTON UNTIL
   DISPLAY: ACTION?
   CANCEL SILENCE
2. PRESS THE 'SELECT' BUTTON AGAIN

~~EXAMINE & SET BATTERY VOLTAGE NOMINAL VALUE~~

1. PRESS THE '+ ARROW' OR '- ARROW' BUTTON UNTIL THE DESIRED CHANNEL IS DISPLAYED.
   DISPLAY: PS-BA
   13.83V NORMAL
2. VERIFY THE DISPLAYED READING WITH A DIGITAL VOLTMETER
3. PRESS THE 'SELECT' BUTTON, AND THE CRTU DISPLAY WILL SWITCH BETWEEN CURRENT/SAVED NOMINAL VOLTAGE VALUES.
   DISPLAY: NOMINAL ON #67 (CURRENT)
   13.83
   DISPLAY: SAVED NOMINAL 6 (STORED)
   12.69
4. PRESS THE 'SELECT' BUTTON AND THE CURRENT OR 'NOMINAL ON' VALUE WILL BE SAMPLED AND STORED AS THE 'SAVED NOMINAL' VALUE
5. VERIFY THE 'NOMINAL ON' AND 'SAVED NOMINAL' VALUES ARE EQUIVALENT. REPEAT STEPS #1 THRU #3 & PRESS THE 'CANCEL' BUTTON.

MARENGO, ILLINOIS
RITZ ROAD
M.P. 67.28
BELVIDERE SUBDIVISION
D.O.T.#174 575C

REV. 11-3-06
INSTALLED FLASHERS, GATES, AND CWT.
M.P. 67.28
W.O.# 45621
REC. #12010
1-21-06 RLT
DJE/WITT/ /JTB

| MODIFICATION LEVEL | |
|---|---|
| Q.A. LAST LEVEL CHK'D. | DH |
| LAST LEVEL MOD. THIS TYP. | DH |
| LAST LEVEL BY DESIGNER. | DI |
| CHANGED FROM TYP.? Y/N | N |

UNION PACIFIC
QUALITY INDUSTRY
SAFETY
SIGNAL DESIGN

DES: JTB
DIG: JTB
CHK: RLT
A.F.E. 45621
ID: BEV6729.3X

UNION PACIFIC RAILROAD
MARENGO, ILLINOIS
HIGHWAY CROSSING SIGNALS
CONTROL CIRCUITS
Office of Sr. AVP Engineering-Signal/TCO OMAHA NEBR.

DATE 4-13-04
SHEET 3
DWG 67.28
BEV-RTE

(REV.01.01.04) (CRTUCFG32-2BAT.3)

4-15-26-36

PROGRAM NOTES

USE TEMPLATE 1A FOR PROPER XING CONFIGURATION

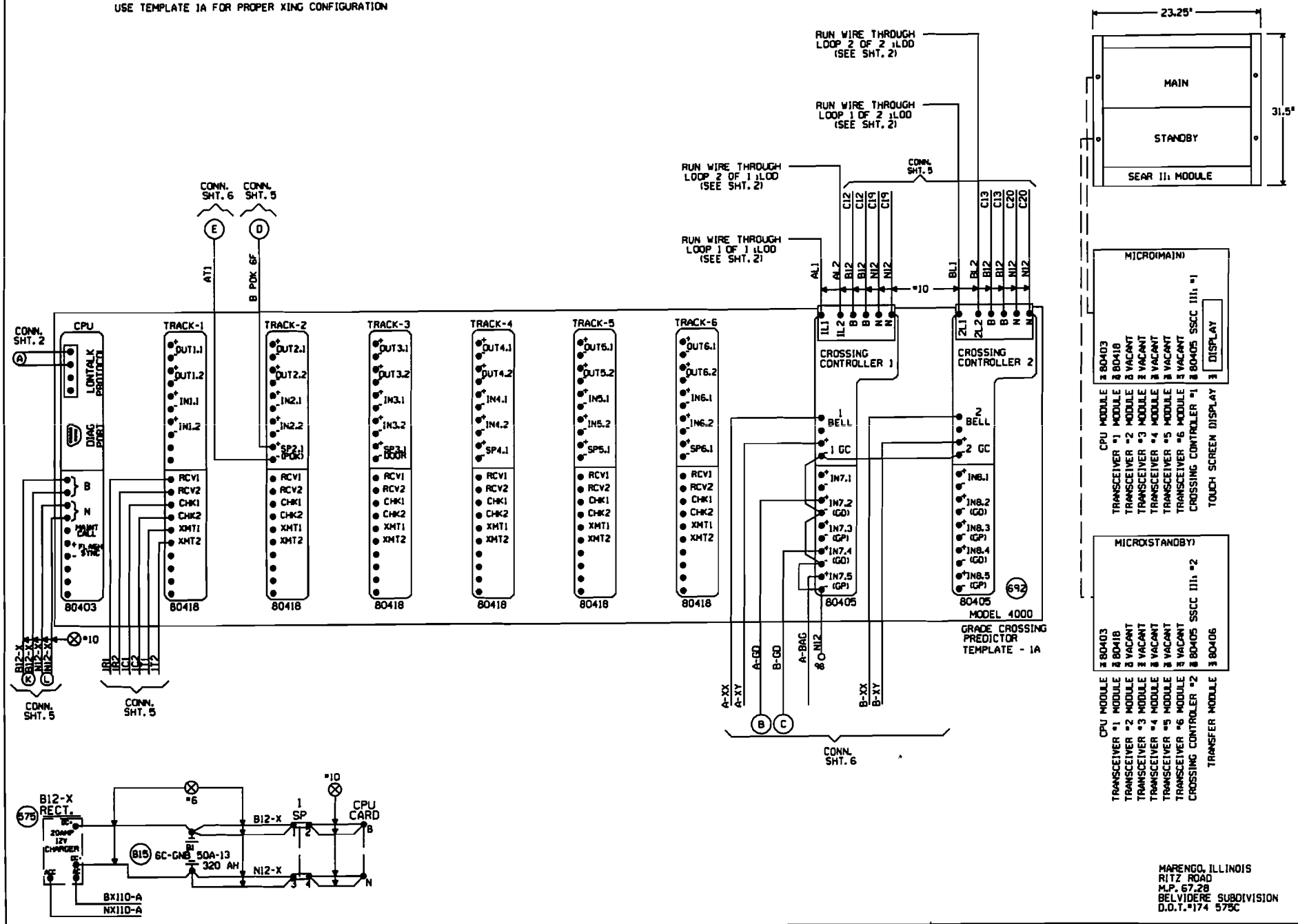


MARENGO, ILLINOIS
RITZ ROAD
M.P. 67.28
BELVIDERE SUBDIVISION
D.O.T.#174 575C

| | | | | | | | |
|---|---|---|---|---|---|---|---|
| REV. 11-3-06 INSTALLED FLASHERS, GATES, AND CWT. M.P. 67.28 W.O. # 45621 REC. #12910 1-31-06 DJE/WITT/ RLT /JTB | MODIFICATION LEVEL | | UNION PACIFIC SAFETY SIGNAL DESIGN | DES: JTB | UNION PACIFIC RAILROAD MARENGO, ILLINOIS HIGHWAY CROSSING SIGNALS CONTROL CIRCUITS Office of Sr. AVP Engineering-Signal/TCO OMAHA NEBR. | DATE 4-13-04 | |
| | O.A. LAST LEVEL CHK'D. | DH | | DIG: JTB | | SHEET 4 | |
| | LAST LEVEL MOD. THIS TYP. | DH | | CHK: RLT | | DWG 67.28 | |
| | LAST LEVEL BY DESIGNER. | DI | | A.F.E. 45621 | | BEV-RTE | |
| | CHANGED FROM TYP.? Y/N | Y | | ID: BEV6728.4X | | | |

(REV. 01.01.04) (4TKB4CF.4 )

5-16-27-37-56

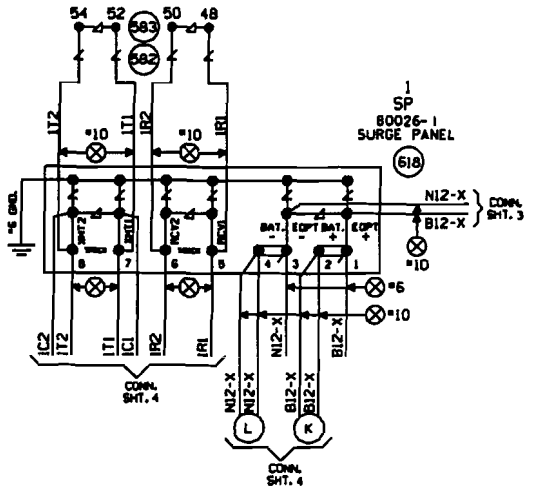


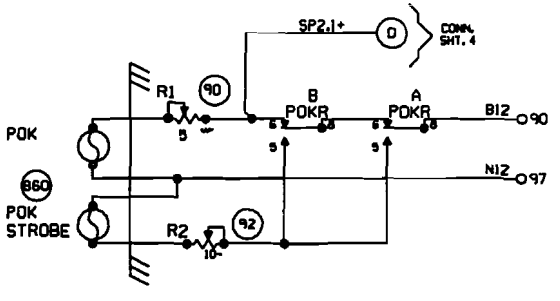


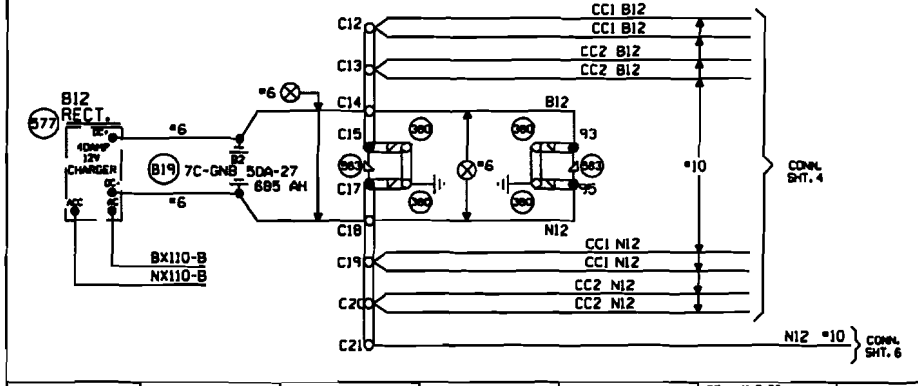


MARENGO, ILLINOIS
RITZ ROAD
M.P. 67.28
BELVIDERE SUBDIVISION
D.O.T.#174 575C

| | | | | | | | | | |
|---|---|---|---|---|---|---|---|---|---|
| | | | | | REV. 11-3-06 INSTALLED FLASHERS, DATES AND CWT. M.P. 67.28 W.O.# 45621 REC. #12810 1-31-06 RLT DJE/WITT/ /JTB | MODIFICATION LEVEL | | UNION PACIFIC | DES: JTB |
| | | | | | | Q.A. LAST LEVEL CHK'D. | OH | QUALITY PRODUCTIVITY SAFETY | DIG: JTB |
| | | | | | | LAST LEVEL MOD. THIS TYP. | OH | | CHK: RLT |
| | | | | | | LAST LEVEL BY DESIGNER. | DI | | A.F.E. 45621 |
| | | | | | | CHANGED FROM TYP.? Y/N | Y | SIGNAL DESIGN | ID: BEV6728.5X |

UNION PACIFIC RAILROAD
MARENGO, ILLINOIS
HIGHWAY CROSSING SIGNALS
CONTROL CIRCUITS
Office of Sr. AVP Engineering-Signal/TCO OMAHA NEBR.

| | |
|---|---|
| DATE | 4-13-04 |
| SHEET | 5 |
| DWG | 67.28 |
| | BEV-RTE |

(REV. 01.01.04) (4TKSPGFC.5 )

6-17-28-38

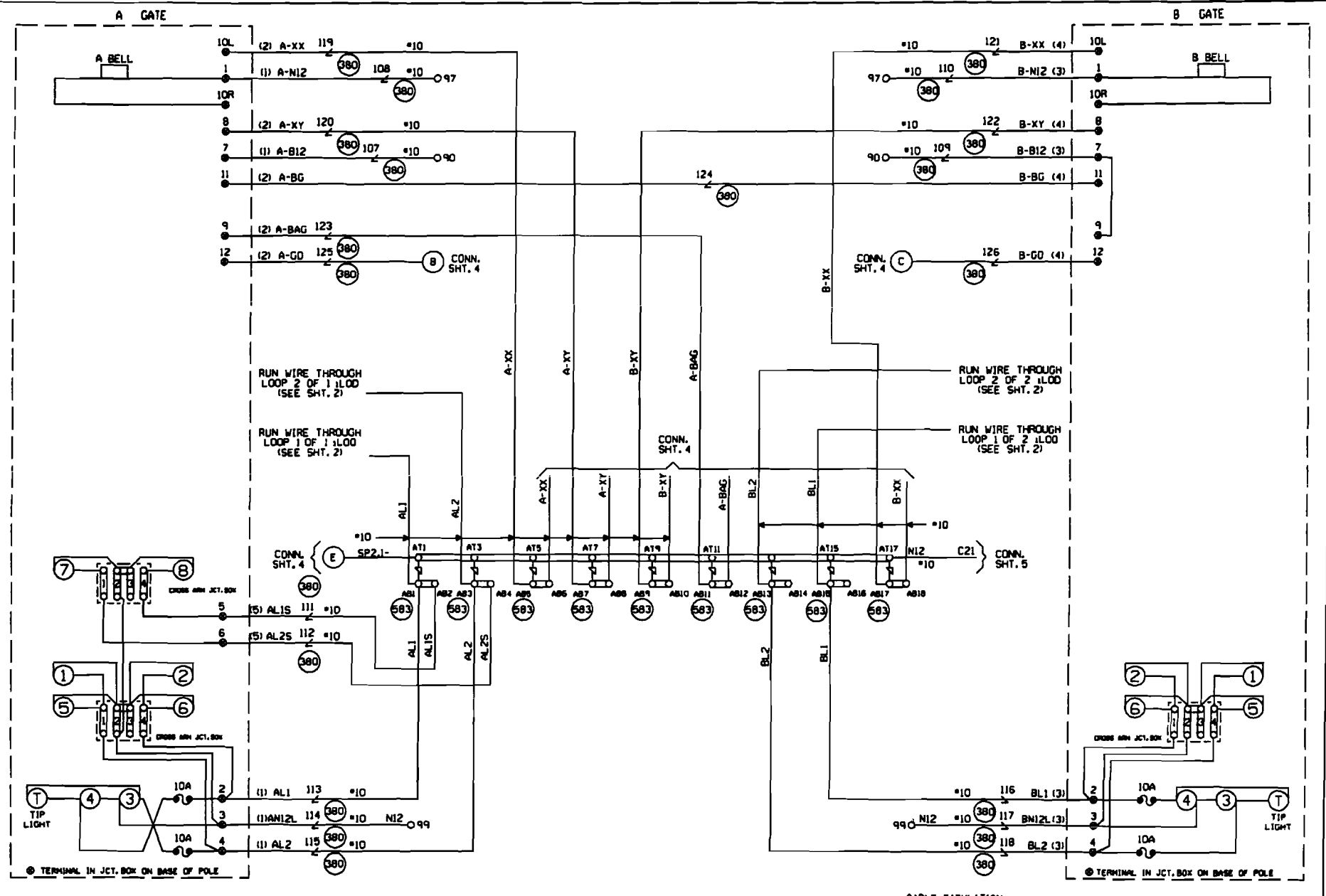


CABLE TABULATION

CABLE NO. 1 5C. NO.6 U.G.B.T.
CABLE NO. 2 7C. NO.14 U.G.B.T.
CABLE NO. 3 5C. NO.6 U.G.B.T.
CABLE NO. 4 7C. NO.14 U.G.B.T.
CABLE NO. 5 2C. NO.6 U.G.B.T.

MARENGO, ILLINOIS
RITZ ROAD
M.P. 67.28
BELVIDERE SUBDIVISION
O.O.T.#174 575C

REV. 11-3-06
INSTALLED FLASHERS, GATES, AND CWT.
M.P. 67.28
W.O. # 45621
REC. #12610
1-31-06 RLT
DJE/WITT/ /JTB

| MODIFICATION LEVEL | |
|---|---|
| Q.A. LAST LEVEL CHK'D. | DH |
| LAST LEVEL MOD. THIS TYP. | DH |
| LAST LEVEL BY DESIGNER. | DI |
| CHANGED FROM TYP.7 Y/N | Y |

UNION PACIFIC
SAFETY
SIGNAL DESIGN

DES: JTB
DIG: JTB
CHK: RLT
A.F.E. 45621
ID: BEV6726.6x

UNION PACIFIC RAILROAD
MARENGO, ILLINOIS
HIGHWAY CROSSING SIGNALS
CONTROL CIRCUITS
Office of Sr. AVP Engineering-Signal/TCO OMAHA NEBR.

DATE 4-13-04
SHEET 6
DWG 67.28
BEV-RTE

(REV. 01.01.04) (CFSL TYP.6 )

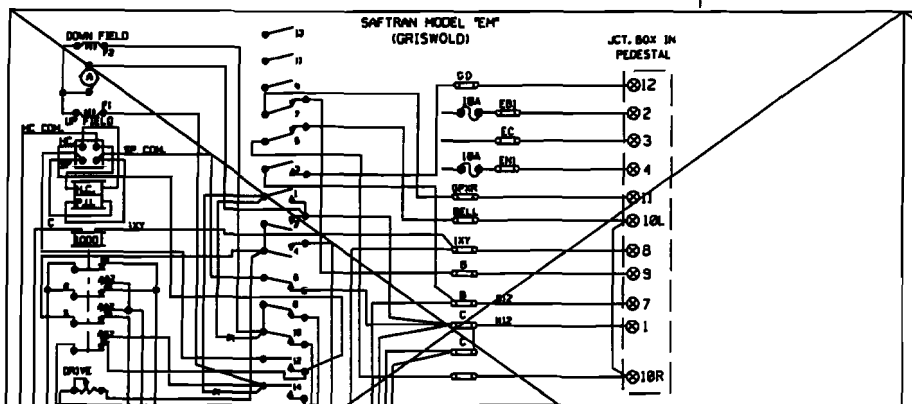


| SWITCH NO. | CONTACT OPERATION CONTACT CLOSES CLOSING | RETURNING | CIRCUIT BREAKER FUNCTIONS USE OF CONTACT |
|---|---|---|---|
| 1 | 40°,50°,60°,70° | 40°,50°,60°,70° | CONTROL OF AFC SUPRESSING RECTIFIERS |
| 2 | 0°-10° | 10°-0° | FINAL DOWN SNUB |
| 3 | 0°-90° | 90°-0° | GATE DOWN |
| 4 | 0°-44° | 44°-0° | DOWN SNUB |
| 5 | 10°-90° | 90°-10° | TO CUT OFF BELL WHEN GATE ARM IS DOWN |
| 6 | 80°-90° | 90°-80° | CONTROL OF SOLENOID PICK UP |
| 7 | 80°-90° | 90°-80° | TO CONTROL GFR RELAY & KEEP FLASHING LIGHTS OPERATING UNTIL GATES CLEAR |
| 8 | 0°,80°,90° | 90°,80°,0° | UP SNUB |
| 9 | | | SPARE |
| 10 | 40°-90° | 90°-49° | MOTOR CUTOUT(DOWN) |
| 11 | | | SPARE |
| 12 | 0°-90° | 90°-0° | OPERATED BY MOTOR CUTOUT SWITCH TO CUT OFF CURRENT FROM SOLENOID PICKUP |
| 13 | | | NO CAM |
| 14 | 0°-90° | 90°-0° | MOTOR CUTOUT(UP) |

WCH 3593-E

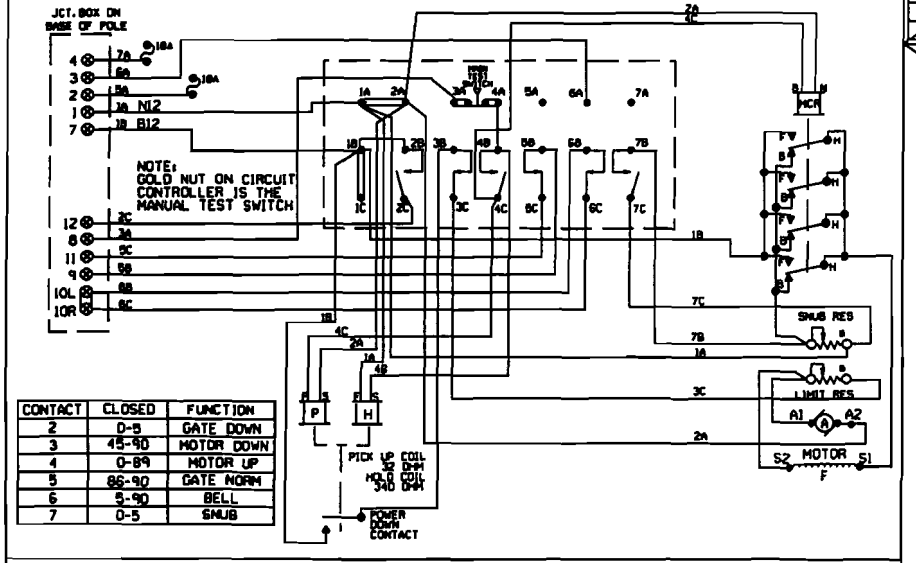


| CONTACT | CLOSED | FUNCTION |
|---|---|---|
| 2 | 0-5 | GATE DOWN |
| 3 | 45-90 | MOTOR DOWN |
| 4 | 0-89 | MOTOR UP |
| 5 | 86-90 | GATE NORM |
| 6 | 5-90 | BELL |
| 7 | 0-5 | SNUB |

ALL MECHANISMS SHOWN IN THE CLEAR POSITION

JCT. BOX ON BASE POLE

| L | R | L | R |
|---|---|---|---|
| 1 | 1 | 7 | 7 |
| 2 | 2 | 8 | 8 |
| 3 | 3 | 9 | 9 |
| 4 | 4 | 10 | 10 |
| 5 | 5 | 11 | 11 |
| 6 | 6 | 12 | 12 |

WCH 3597-RB

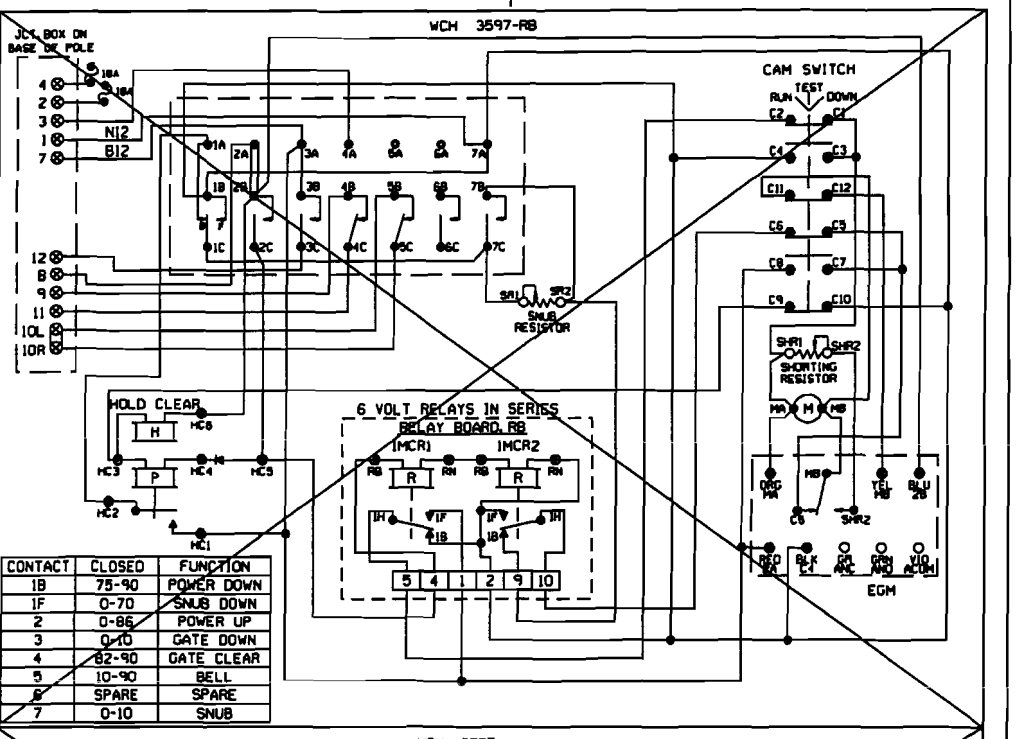


| CONTACT | CLOSED | FUNCTION |
|---|---|---|
| 1B | 75-90 | POWER DOWN |
| 1F | 0-70 | SNUB DOWN |
| 2 | 0-86 | POWER UP |
| 3 | 0-10 | GATE DOWN |
| 4 | 82-90 | GATE CLEAR |
| 5 | 10-90 | BELL |
| 6 | SPARE | SPARE |
| 7 | 0-10 | SNUB |

WCH 3597

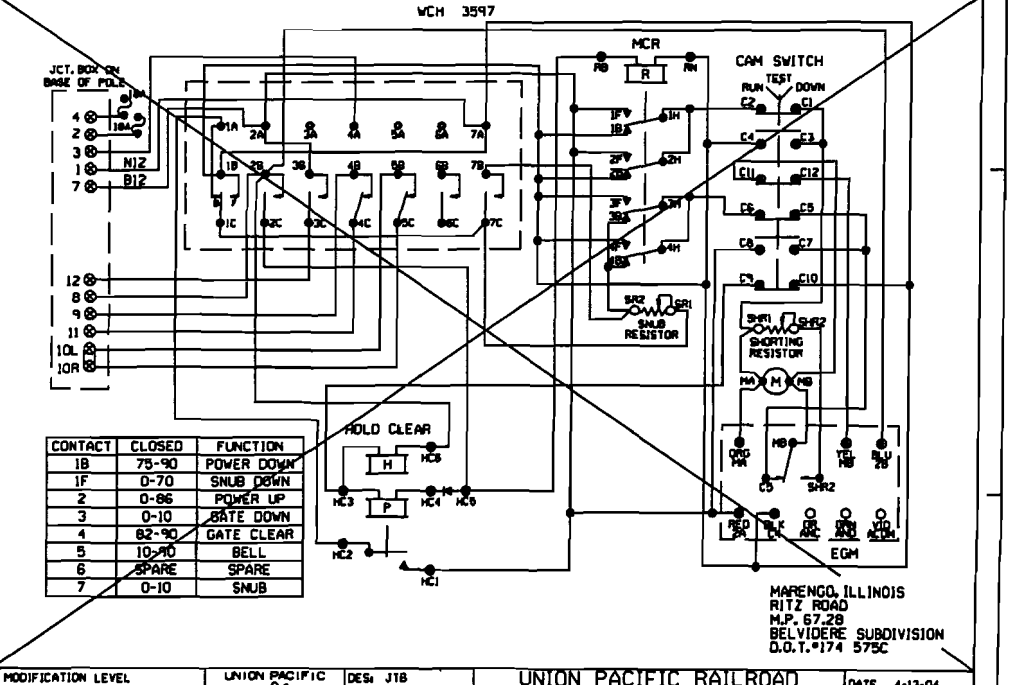


| CONTACT | CLOSED | FUNCTION |
|---|---|---|
| 1B | 75-90 | POWER DOWN |
| 1F | 0-70 | SNUB DOWN |
| 2 | 0-86 | POWER UP |
| 3 | 0-10 | GATE DOWN |
| 4 | 82-90 | GATE CLEAR |
| 5 | 10-90 | BELL |
| 6 | SPARE | SPARE |
| 7 | 0-10 | SNUB |

MARENGO, ILLINOIS
RITZ ROAD
M.P. 67.28
BELVIDERE SUBDIVISION
D.O.T.#174 575C

| | | | | | |
|---|---|---|---|---|---|
| REV. 11-3-06 INSTALLED FLASHERS, GATES, AND CVT. M.P. 67.28 W.O. # 45621 REC. #12910 1-31-06 DJE/WITT/ RLT /JTB | MODIFICATION LEVEL | | UNION PACIFIC SIGNAL DESIGN | DES: JTB DIG: JTB CHK: RLT A.F.E. 45621 ID# BEV6728.7X | UNION PACIFIC RAILROAD MARENGO, ILLINOIS HIGHWAY CROSSING SIGNALS CONTROL CIRCUITS Office of Sr. AVP Engineering-Signal/TCO OMAHA NEBR. | DATE 4-13-04 SHEET 7 DWG 67.28 BEV-RTE |
| | Q.A. LAST LEVEL CHK'D. | DH | | | | |
| | LAST LEVEL MOD. THIS TYP. | DG | | | | |
| | LAST LEVEL BY DESIGNER. | DI | | | | |
| | CHANGED FROM TYP.? Y/N | N | | | | |

(REV. 01.01.04) (GWIRING.DGN)

9-20-31-41

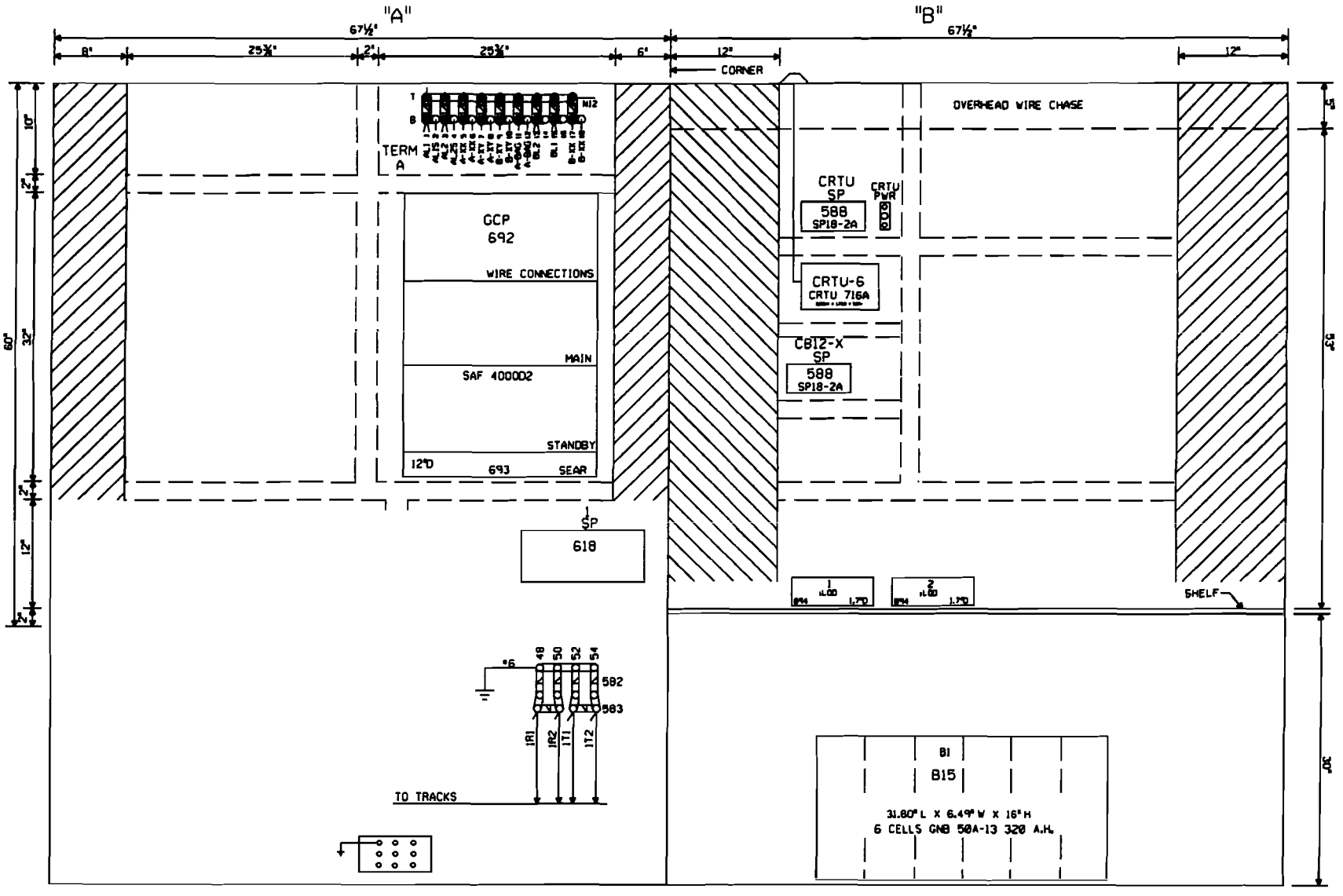


NOTE: ALL DIMENSIONS SHOWN ARE APPROXIMATE.

0 1 2 3 4 FEET

SCALE: 1.5 INCHES = 1 FOOT

MARENGO, ILLINOIS
RITZ ROAD
M.P. 67.28
BELVIDERE SUBDIVISION
D.O.T.#174 575C

REV. 11-3-06
INSTALLED FLASHERS.
DATES, AND CWT.
M.P. 67.28
W.O. # 45621
REC. #12610
1-31-06 RLT
DJE/WITT/ /JTB

| MODIFICATION LEVEL | |
|---|---|
| Q.A. LAST LEVEL CHK'D. | DH |
| LAST LEVEL MOD. THIS TYP. | DH |
| LAST LEVEL BY DESIGNER. | DI |
| CHANGED FROM TYP.? Y/N | Y |

UNION PACIFIC
SAFETY QUALITY SERVICE
SIGNAL DESIGN

DES: JTB
DIG: JTB
CHK: RLT
A.F.E. 45621
ID: BEV6728.8X

UNION PACIFIC RAILROAD
MARENGO, ILLINOIS
HIGHWAY CROSSING SIGNALS
CONTROL CIRCUITS
Office of Sr. AVP Engineering-Signal/TCD OMAHA NEBR.

DATE 4-13-04
SHEET 8
DWG 67.28
BEV-RTE

(REV. 01.01.04) (4TKGFC.8 )

10-21-32