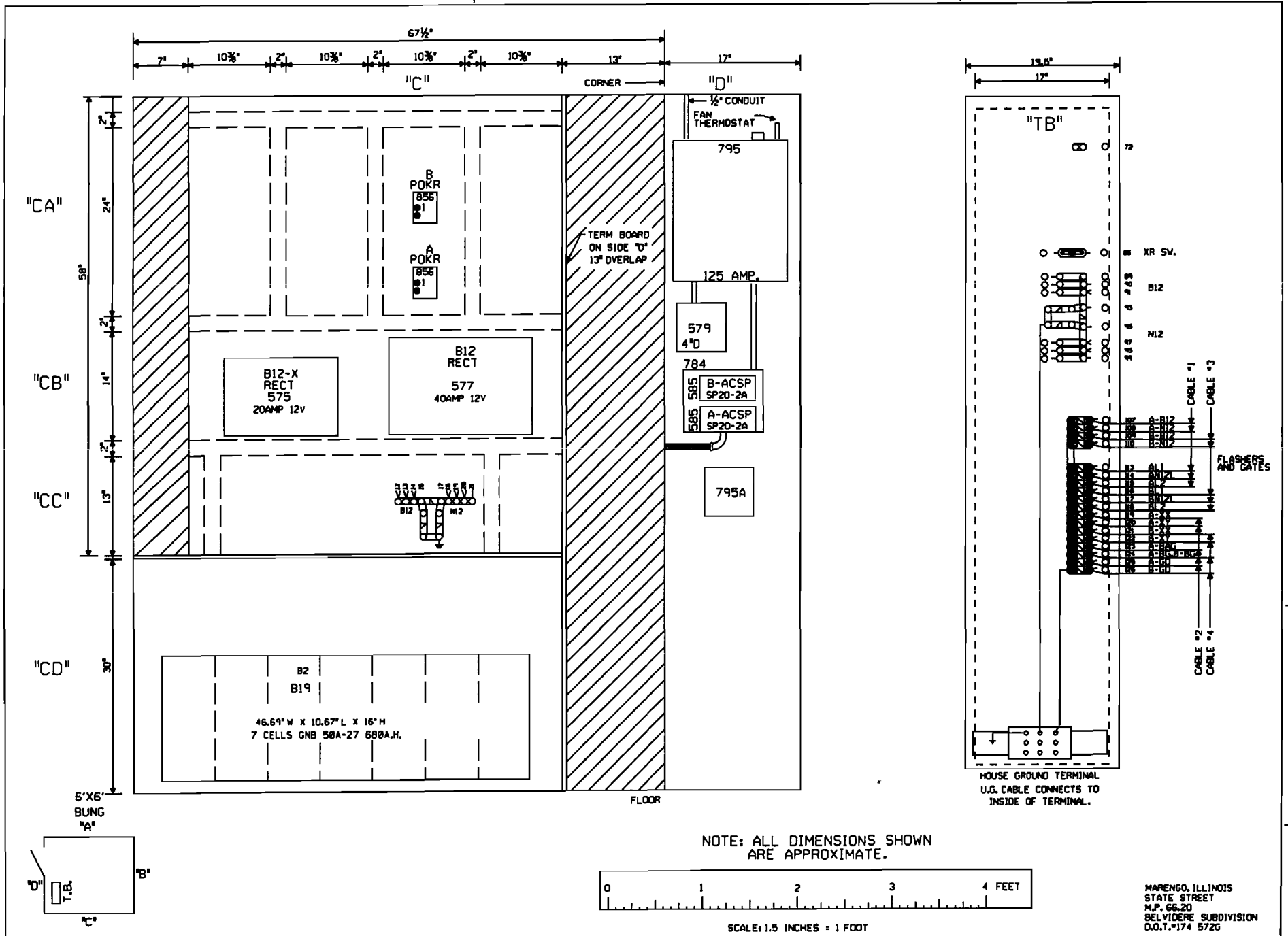
67½"
7"
10⅜"
2"
10⅜"
2"
10⅜"
2"
10⅜"
13"
17"
"C"
CORNER
"D"
½" CONDUIT
FAN THERMOSTAT
795
125 AMP.
579
4"D
784
585
B-ACSP
SP20-2A
585
A-ACSP
SP20-2A
795A
B
POKR
856
A
POKR
856
TERM BOARD ON SIDE "D" 13" OVERLAP
B12-X
RECT
575
20AMP 12V
B12
RECT
577
40AMP 12V
B12
N12
"CA"
"CB"
"CC"
"CD"
58"
24"
14"
13"
30"
B2
B19
46.69" W X 10.67" L X 16" H
7 CELLS GNB 50A-27 680A.H.
FLOOR
6'X6'
BUNG
"A"
"B"
"C"
"D"
T.B.
19.5"
17"
"TB"
XR SW.
B12
N12
CABLE #1
CABLE #3
A-B12
B-N12
FLASHERS AND GATES
CABLE #2
CABLE #4
HOUSE GROUND TERMINAL
U.G. CABLE CONNECTS TO
INSIDE OF TERMINAL.
NOTE: ALL DIMENSIONS SHOWN
ARE APPROXIMATE.
0
1
2
3
4 FEET
SCALE: 1.5 INCHES = 1 FOOT
MARENGO, ILLINOIS
STATE STREET
M.P. 66.20
BELVIDERE SUBDIVISION
D.O.T.#174 572G
J REV. 07-02-08
INSTALL FLASHERS
& GATES WITH CWT
AT M.P. 66.20.
WO#84098 REC#15235
05-12-08 GRK
JWS/NST/SSC/JJF
MODIFICATION LEVEL
O. A. LAST LEVEL CHECKED DP
LAST LEVEL MOD THIS TYPICAL DP
LAST LEVEL BY DESIGNER DP
CHANGED FROM TYPICAL? Y
UNION PACIFIC
SIGNAL DESIGN
DES: SSC
DIG: SSC
CHK: GRK
A.F.E. 84098
ID: BEV5620.*X
UNION PACIFIC RAILROAD
MARENGO, ILLINOIS
HIGHWAY CROSSING SIGNALS
CONTROL CIRCUITS
Office of Sr. AVP Engineering - Signal/ICD Omaha, Nebraska
DATE 05-21-07
SHEET 9
DWG 66.20
BEV

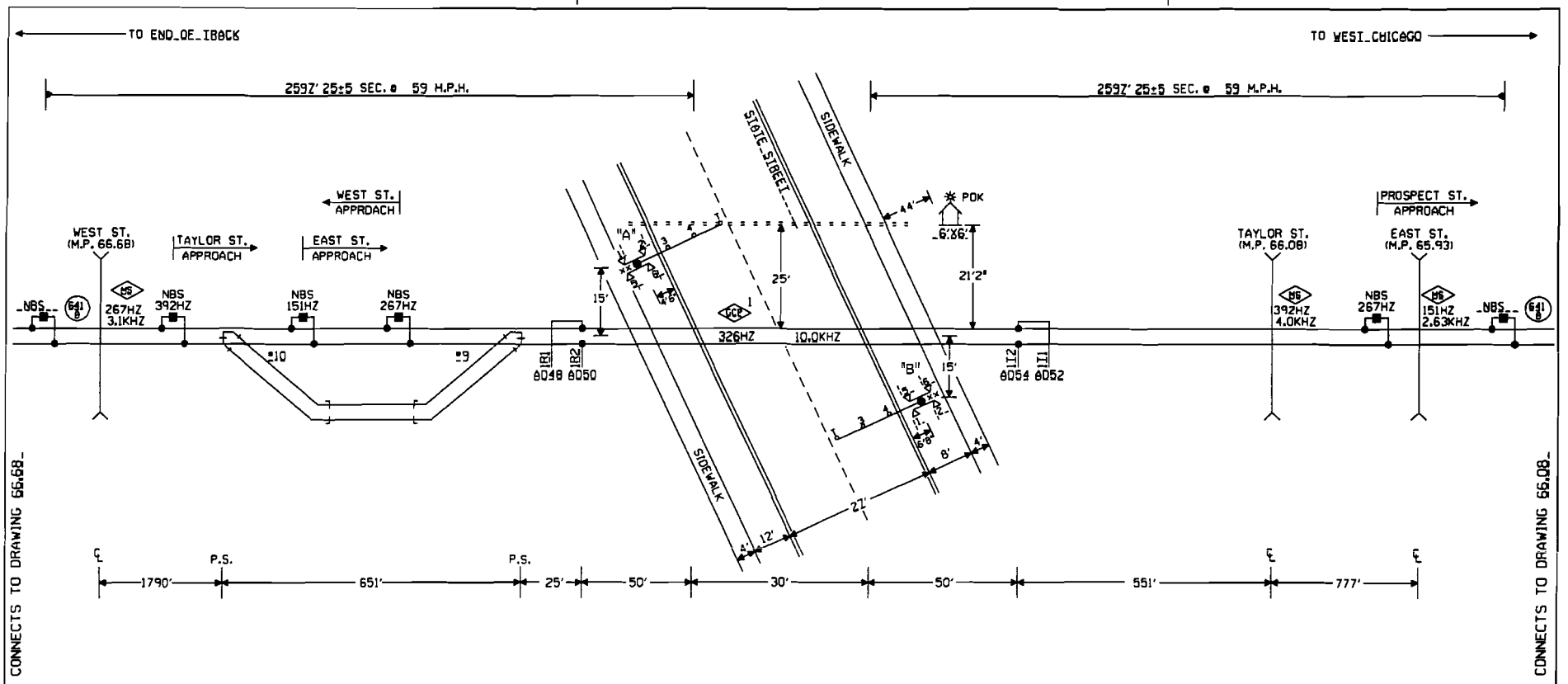

NOTES:

⊗= TWISTED WIRES
INSULATED 1 TWIST PER FT.
ALL TRACK WIRES 2C. #6

TRANSMITTER AND RECEIVER LEADS TO BE SEPARATED BY AT LEAST 12" IN TRENCH. LENGTHS SHOULD NOT EXCEED MANUFACTURES RECOMMENDATION.

TOP OF FOUNDATION TO BE AT SAME ELEVATION AS THE SURFACE OF THE TRAVELED WAY & NO MORE THAN 4" ABOVE THE SURFACE OF THE GROUND.

ALL BUNGALOW WIRING TO BE #16 AWG FLEX UNLESS OTHERWISE SPECIFIED EXCEPT ALL GROUND WIRE TO BE #6 AWG FLEX OR LARGER.

ALL WIRING IN GATE MECHANISM TO BE #10 "AWG FLEX".

REFER TO UP STANDARD DWG FOR BUNGALOW GROUNDING.

ALL LIGHTS TO BE 12" ROUNDELS.

= = = = = = 4" X 70' CONDUIT

LIGHTS: LED LIGHTS

GATE A: 18'
GATE B: 18'

xx = BELL

W ←—○—→ E

MARENGO, ILLINOIS
STATE STREET
M.P. 66.20
BELVIDERE SUBDIVISION
D.O.T.#174 572G

1 REV. 07-02-08 INSTALL ELASTERS & GATES WITH CWT AT M.P. 66.20 WO#84098 REC#15235 05:12:08 GBK JWS/NSI/SSC/JJE	MODIFICATION LEVEL		UNION PACIFIC QUALITY PRODUCTIVITY SAFETY SIGNAL DESIGN	DES: SSC	UNION PACIFIC RAILROAD	DATE 05:21:07
	O.A. LAST LEVEL CHECKED	DP		DIG: SSC	MARENGO, ILLINOIS	SHEET 1
	LAST LEVEL MOD THIS TYPICAL	DP		CHK: GBK	HIGHWAY CROSSING SIGNALS	DWG 66.20
	LAST LEVEL BY DESIGNER	DP		A.F.E. 84098	CONTROL CIRCUITS	BEV
	CHANGED FROM TYPICAL?	Y		ID: BEV6620.1X	Office of Sr. AVP Engineering-Signal/TCO Omaha, Nebraska	

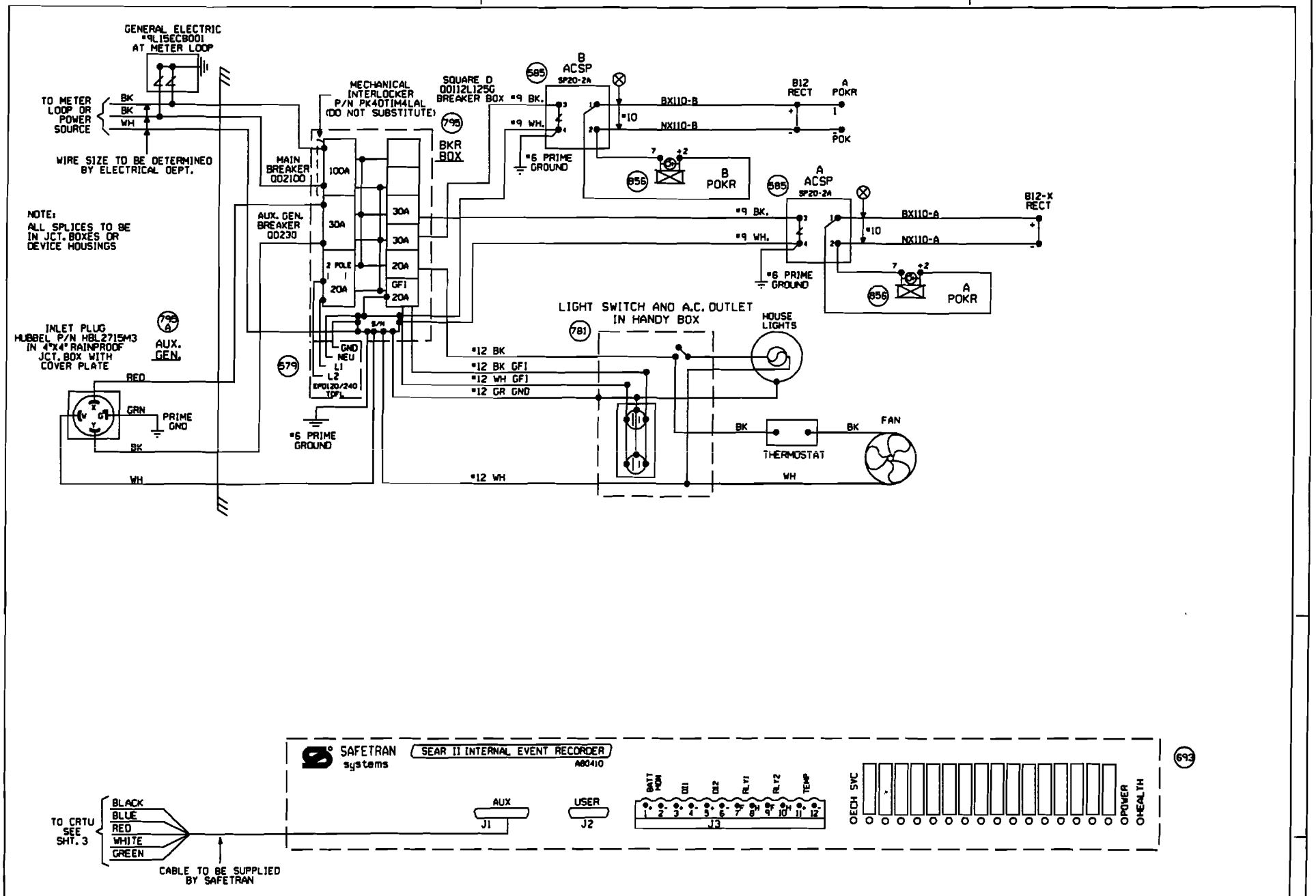

MARENGO, ILLINOIS
STATE STREET
M.P. 66.20
BELVIDERE SUBDIVISION
O.D.T.#174 572G

1 REV. 07-02-08 INSTALL FLASHERS & GATES WITH CWT AT M.P. 66.20. WO#84098 REC#15235 05-12-08 GRK JWS/NST/SSC/JJF	MODIFICATION LEVEL		UNION PACIFIC SAFETY SIGNAL DESIGN	DES: SSC	UNION PACIFIC RAILROAD	DATE 06-21-07
	O.A. LAST LEVEL CHECKED	DP		DIG: SSC	MARENGO, ILLINOIS	SHEET 2
	LAST LEVEL MOD THIS TYPICAL	DP		CHK: GRK	HIGHWAY CROSSING SIGNALS	DWG 66.20
	LAST LEVEL BY DESIGNER	DP		A.F.E. 84098	CONTROL CIRCUITS	BEV
	CHANGED FROM TYPICAL?	N		ID: BEV6620.2X	Office of Sr AVP Engineering - Signal/TCD Omaha, Nebraska	

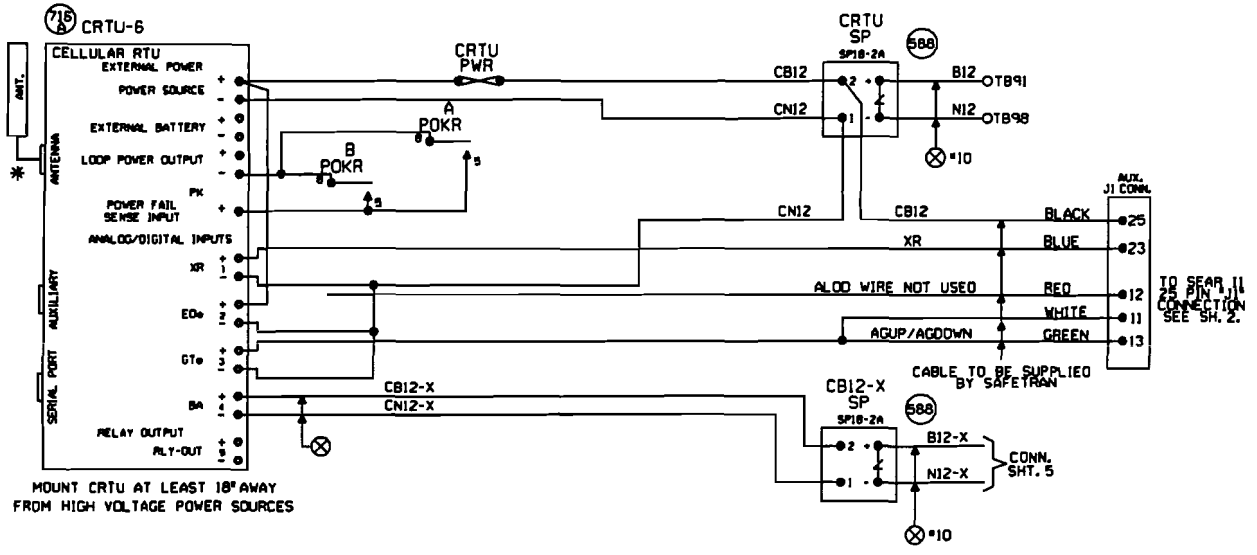

NOTES:

ALL DIODES IN5060 OR IN4004 UNLESS OTHERWISE NOTED.

* MOUNT ANTENNA ON TOP OF HOUSE.
  INSTALL ANTENNA CABLE AND CHOKE PER TECH BULLENTIN #99-0015-00

ALL WIRES #18 UNLESS OTHERWISE NOTED.

ALL UNUSED 'NC' INPUTS MUST BE TIED HIGH TO BATTERY

ALL UNUSED ANALOG INPUTS MUST BE TIED HIGH TO BATTERY

ALL UNUSED 'NO' INPUTS MUST BE DISCONNECTED

NORMAL STATE FOR ANALOG CHANNELS IS EQUAL TO THE STORED NOMINAL VOLTAGE +120% OR -81%

CRTU FRONT PANEL DISPLAY CHART INDICATES NORMAL STATE

■ DIGITAL INPUT HIGH, OR POWER FAIL INPUT CLOSED
□ DIGITAL INPUT LOW, OR POWER FAIL INPUT OPEN

■ L ← LATCH IS SET BECAUSE CRTU DETECTED AN ALARM CONDITION
12.06V L

'■RUN MODE' '■RUN MODE-SILENT'
CRTU RADIO IS DISABLED. REPROGRAM CRTU WITH LAPTOP.

ANALOG AND AC INPUT MODULES AND SURGE PROTECTORS MUST BE MOUNTED LESS THAN 18" FROM CRTU

ANALOG MODULES CONVERT DC VOLTAGE TO A SQUARE WAVE. A WORKING ANALOG MODULE WILL HAVE 4.5VDC TO 8.0VDC BETWEEN 5VOUT+ AND 6VOUT-. WHERE, 0VOLTS = 0HZ OUT. 30VOLTS = 10KHZ OUT, AND 15VOLTS = 5KHZ OUT
MAKE SURE CRTU IS PROGRAMMED WITH CALIBRATION SETTINGS.

CRTU CH4 CAN BE CONNECTED TO EITHER SP18 OR EQUIPMENT SIDE OF MOSAI, TAB 565

UNIT INSTALLATION AND SETUP

R,R, SITE ID WHERE: SSSS = 4 CHARACTER SUBDIVISION ID. FILL WITH PRECEDING ZEROS AS REQUIRED. THE MAIN TRACK SUBDIVISION ID* IS IN THE CURRENT TIMETABLE. INDUSTRIAL LEADS, LEASED, AND LEAD TRACKS LISTED WITHIN THE SUBDIVISION MAY HAVE THEIR OWN UNIQUE SUBDIVISION ID*. ALWAYS REFER TO CURRENT PRINTED COPY OF THE TIMETABLE.
LLLLLLLL = 8 CHARACTERS USE DOT* AT CROSSINGS, AND
WOLLLLLL = USE 'WO' THEN MP* AT WAYSIDE LOCATIONS.
EXAMPLE = 0785WO1801.5UT
HBLLLLLL = USE 'HB' THEN MP* AT HBD SITES.
EXAMPLE = 0100-HB55.52TX
THE MP* MUST USE A DECIMAL POINT TO SEPARATE NUMBERS. FILL WITH PRECEDING DASHES AS REQUIRED.
AA = 2 CHARACTER STATE NAME FOR ALL LOCATIONS.
MUST BE 14 CHARACTERS LONG, NO SPACES ALLOWED.

SITE IDENTIFIER: SSSSLLLLLLLLAA	0015-174552GIL
OPERATION TO RESUME: RUN	
SIGNAL STRENGTH dBm	
CARRIER ID	
FIRMWARE VERSION	2.3.06
SERIAL NUMBER	
BOOT VERSION:	
CMM VERSION:	
MIN ASSIGNMENT	
ESN (MICROBURST ONLY)	
CONFIGURATION NET	MICROBURST
SILENCE INTERVAL	60 MINUTES
HEALTHCHECK INTERVAL	EVERY 2 DAYS
ALARM DEFER DELAY	240 MINUTES (4 HOURS)
SIGNAL STATUS	
SCADANET STATUS	
CALIBRATION CONSTANT CH1	
CALIBRATION CONSTANT CH2	
CALIBRATION CONSTANT CH3	
CALIBRATION CONSTANT CH4	
CALIBRATION CONSTANT PS	

FIELD PROVIDES: SAMPLED NOMINAL VOLTAGES, SCADANET STATUS CALIBRATION CONSTANTS, SERIAL NUMBER, AND SIGNAL STATUS.

CHANNEL SETUP - STANDARD CONFIGURATION 32:XR,EOe,GTe,Ba

CHANNEL NORMAL STATE	SENSE (NO/NC)	NAME FUNCTION	RECOGNITION DELAY SECONDS ACTIVE	RECOGNITION DELAY SECONDS NORMAL	RETURN TO NORMAL	REPORTING MODE	ALARM LINKED CHANNEL	ALARM LINKED CRITERIA	EVENT LOGGING ENABLED OPTIONS
POWER FAIL (CH5) ■	POWER FAIL DETECT NO	PF:n-PK AC POWER FAIL	7,200 ALARM	300 NORMAL	ENABLED	ALERT	DISABLED	N/A	
CH1 ■	DIGITAL INPUT NC	CH1-XR XR DOWN TO LONG	1,800 ALARM	1 NORMAL	ENABLED	ALERT	DISABLED	N/A	ANALOG VALUE SENT
CH2 □	DIGITAL INPUT NO	CH2-EOe LIGHT OUT	120 ALARM	10 NORMAL	ENABLED	ALERT	DISABLED	N/A	
CH3 ■	DIGITAL INPUT NO	CH3-GTe GATES NOT UP/DOWN	120 ALARM	10 NORMAL	ENABLED	ALERT	DISABLED	N/A	
CH4 STORED NOMINAL VOLTAGE	ANALOG INPUT N/A	CH4-Ba/Y BATTERY MONITOR BATTERY LOW	600 ALARM	1200 NORMAL	ENABLED	ALERT W/UPDATE	DISABLED	N/A	DIGITAL EVENTS
POWER SOURCE (CH6)	ANALOG INPUT N/A	PS-Ba/Y BATTERY MONITOR BATTERY LOW	600 ALARM	1200 NORMAL	ENABLED	ALERT W/UPDATE	DISABLED	N/A	PF:n-PK CH1-XR CH2-EOe CH3-GTe

ANALOG CHANNEL	USEFUL RANGE VOLTS LOW	USEFUL RANGE VOLTS HIGH	DISPLAYED RANGE VOLTS LOW	DISPLAYED RANGE VOLTS HIGH	RELATIVE ALARM POINT LOW	RELATIVE ALARM POINT HIGH	ABSOLUTE ALARM POINT LOW	ABSOLUTE ALARM POINT HIGH	AUTOMATIC UPDATE INTERVAL	STORED NOMINAL VOLTAGE	SAMPLED NOMINAL VOLTAGE
CH4	0.0	30.00	0.0	30.00	81%	120%	10.0	29.0	14 DAYS	12.69	
POWER SOURCE	0.0	30.00	0.0	30.00	81%	120%	10.0	29.0	14 DAYS	12.69	
RELAY OUTPUT	NAME RLY-OUT		ACTIVE SET-UP-OPEN		NORMAL CLR-ON-CLOSE		PULSE DURATION		15 SECONDS	SetCfg Ver: 2.3.3 REV'D 9-20-02	

MAINTENANCE OPERATIONS

TO START OR ABORT ANY PROCEDURE

1. PRESS THE 'CANCEL' BUTTON FIRST

WHEN RESPONDING TO A CALL, PUT THE CRTU IN THE 'SILENCE ALARMS' MODE

1. PRESS 'SELECT' AND THEN '+ ARROW' BUTTON UNTIL
   DISPLAY: ACTION?
   SILENCE ALARMS
2. PRESS THE 'SELECT' BUTTON TWICE
3. CORRECT PROBLEM AND SIMULATE NORMAL TRAIN MOVEMENT THROUGH THE LOCATION
4. EXAMINE EACH CHANNEL ON THE CRTU
5. PRESS THE '+/- ARROW' BUTTON
   VERIFY ALL CHANNELS INDICATE A NORMAL STATE
   NORMAL STATES ARE ON THE CHANNEL SETUP CHART

CLEAR TIMERS, LATCHES AND SEND ALL NORMAL

1. DO STEPS #1 - #5 ABOVE, AND PRESS 'CANCEL'.
2. PRESS 'SELECT' AND THEN '- ARROW' BUTTON UNTIL
   DISPLAY: ACTION?
   SERVICE MODE
3. PRESS 'SELECT' AGAIN TO RESET TIMERS, AND IF
   DISPLAY: SERVICE MODE
   ALL NORMAL
4. PRESS 'SELECT' AGAIN TO CLEAR LATCHES, AND SEND ALL NORMAL, SKIP STEPS #5-#6.
5. HOWEVER, IF ALARMS ARE NOT CLEARED:
   DISPLAY: SERVICE MODE
   ALARMS PENDING/PRESENT
6. PRESS 'CANCEL'. CORRECT PROBLEM AND REPEAT STEPS #2 THRU #5 UNTIL ALL NORMAL SENT.

TO CANCEL THE 'SILENCE ALARMS' MODE

1. PRESS 'SELECT' AND THEN '+ ARROW' BUTTON UNTIL
   DISPLAY: ACTION?
   CANCEL SILENCE
2. PRESS THE 'SELECT' BUTTON AGAIN

EXAMINE & SET BATTERY VOLTAGE NOMINAL VALUE

1. PRESS THE '+ ARROW' OR '- ARROW' BUTTON UNTIL THE DESIRED CHANNEL IS DISPLAYED.
   DISPLAY: PS-Ba/n
   13.83V NORMAL
2. VERIFY THE DISPLAYED READING WITH A DIGITAL VOLTMETER
3. PRESS THE 'SELECT' BUTTON, AND THE CRTU DISPLAY WILL SWITCH BETWEEN CURRENT/SAVED NOMINAL VOLTAGE VALUES.
   DISPLAY: NOMINAL ON #67 (CURRENT)
   13.83
   DISPLAY: SAVED NOMINAL 6 (STORED)
   12.69
4. PRESS THE 'SELECT' BUTTON AND THE CURRENT OR 'NOMINAL ON' VALUE WILL BE SAMPLED AND STORED AS THE 'SAVED NOMINAL' VALUE
5. VERIFY THE 'NOMINAL ON' AND 'SAVED NOMINAL' VALUES ARE EQUIVALENT. REPEAT STEPS #1 THRU #3 & PRESS THE 'CANCEL' BUTTON.

MARENGO, ILLINOIS
STATE STREET
M.P. 66.20
BELVIDERE SUBDIVISION
D.O.T.#174 572G

1 REV. 07-02-08 INSTALL FLASHERS & GATES WITH CWT AT M.P. 66.20. WO#84098 REC#15235 05-12-08 GRK JVS/NST/SSC/JJF	MODIFICATION LEVEL
	O.A. LAST LEVEL CHECKED DJ
	LAST LEVEL MOD THIS TYPICAL DJ
	LAST LEVEL BY DESIGNER DP
	CHANGED FROM TYPICAL? Y

UNION PACIFIC — QUALITY PRODUCTIVITY SAFETY — SIGNAL DESIGN

DES: SSC
DIG: SSC
CHK: GRK
A.F.E. 84098
ID: BEV6620.3X

UNION PACIFIC RAILROAD

MARENGO, ILLINOIS
HIGHWAY CROSSING SIGNALS
CONTROL CIRCUITS

Office of Sr. VP Engineering - Signal/TCO Omaha, Nebraska

DATE 06-21-07
SHEET 3
DWG 66.20
BEV

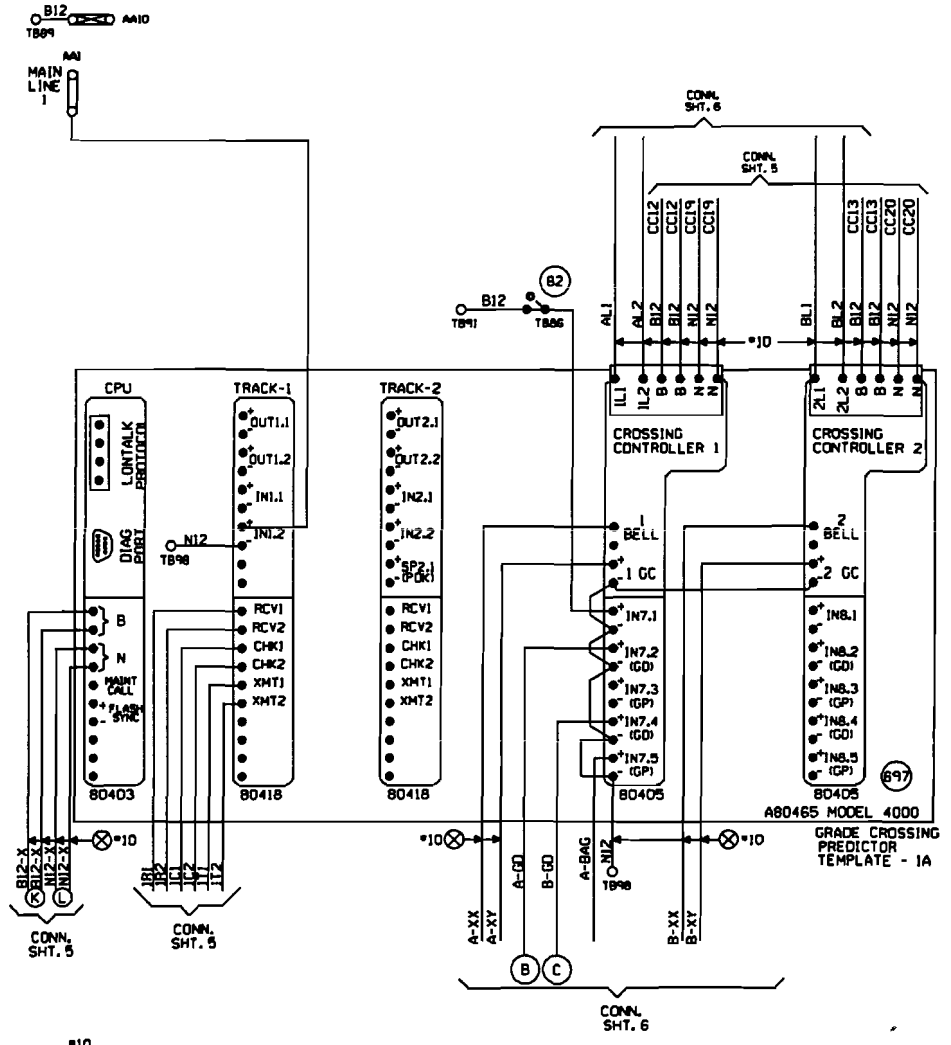

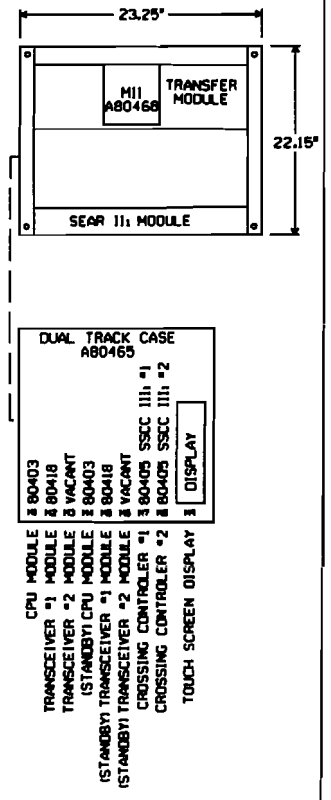

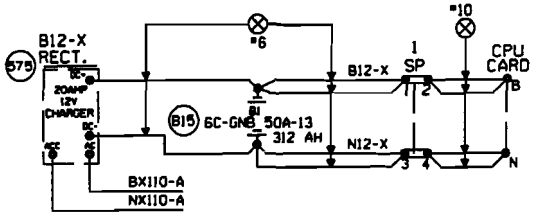

"Mf" FREQUENCY (HZ)	MAXIMUM TRANSMIT WIRE LENGTH (FEET)
86	100
114	125
156	150
211	200
285-970	250

NOTE:
EACH TRANSMITTER TO RAIL WIRE FROM XMT1 AND XMT2 MUST NOT EXCEED THE MAXIMUM LENGTH SPECIFIED IN THE TABLE SHOWN. THE RECEIVER WIRE LENGTH IS NOT CRITICAL. DOES NOT APPLY TO 6 TRACK WIRE APPLICATION.

MARENGO, ILLINOIS
STATE STREET
M.P. 66.20
BELVIDERE SUBDIVISION
D.O.T.#174 572G

1 REV. 07-02-08 INSTALL FLASHERS & GATES WITH CWT AT M.P. 66.20. WO#84098 REC#15235 05-12-08 GRK JWS/NST/SSC/JJF	MODIFICATION LEVEL		UNION PACIFIC SIGNAL DESIGN	DES: SSC	UNION PACIFIC RAILROAD
	O.A. LAST LEVEL CHECKED	DP		DIG: SSC	MARENGO, ILLINOIS
	LAST LEVEL MOD THIS TYPICAL	DP		CHK: GRK	HIGHWAY CROSSING SIGNALS
	LAST LEVEL BY DESIGNER	DP		A.F.E. 84098	CONTROL CIRCUITS
	CHANGED FROM TYPICAL?	Y		ID: BEV6620.4X	Office of Sr AVP Engineering - Signal/TCD Omaha, Nebraska

DATE 05-21-07
SHEET 4
DWG 66.20
BEV

Minimum Program Steps Report

Location and SIN

DOT Number: 174572G
Milepost Number: 66.20
Site Name: MARENGO, ILLINOIS

SIN: 762010010016 *

* Parameter is part of office check number calculation.

MCF and Template Selection

MCF Name: GCP-T6X-01-2.mcf
MCF Revision: 012
MCFCRC: 0DFE7A0C
Geo Unit UCN: FFFFFFFF

Template = 1A:6 Trk Bi *

* Parameter is part of office check number calculation.

Minimum Program Steps

TEMPLATE: track 1-Bi, Island
Track 1 : GCP Frequency = 326 Hz
Track 1 : Approach Distance = 2547 ft See Plans
Track 1 : Prime Warning Time = 25 sec *
Track 1 : GCP Transmit Level = High Set in Field
Track 1 : Isl Frequency = 10.0 kHz

TEMPLATE: AND 1 XR
AND 1 Enable Used = Yes *

TEMPLATE: IP assignment 1
IN 1.2 = Out Of Service IP 1 *

TEMPLATE: IP assignment SSCC
IN 7.1 = AND 1 XR Enable *

TEMPLATE: SEAR
SP 2.1 = Not Used *
SP 3.1 = Not Used *

GCP: track 1
Track 1 : GCP Freq Category = Other *
Track 1 : Island Distance = 134 ft *

ADVANCED: out of service
OOS Control = OOS IPs *

SSCC
Bell On Gate Rising = Yes *

* Parameter is part of office check number calculation.

Check Numbers

Office Check Number: 1852F2B3
Config. Check Number: 479F1E3F
(Based on MCF Revision 012)

Parameters not part of office check number calculation:

Track 1 : GCP Frequency = 326 Hz
Track 1 : Approach Distance = 2547 ft See Plans
Track 1 : GCP Transmit Level = High Set in Field
Track 1 : Isl Frequency = 10.0 kHz

Comments

<none>

Configuration Package File

Filename: BEV6620_174572G.pac

MARENGO, ILLINOIS
STATE STREET
M.P. 66.20
BELVIDERE SUBDIVISION
D.O.T.#174 572G

				1 REV. 07-02-08 INSTALL FLASHERS & GATES WITH CWT AT M.P. 66.20. WO#84098 REC#15235 05-12-08 GRK JWS/NST/SSC/JJF	NOTE: Actual OFFSET and ISLAND distances must be entered by field personnel.	UNION PACIFIC SIGNAL DESIGN	DES: SSC DIG: SSC CHK: GRK A.F.E. 84098 ID: BEV6620.4AX	UNION PACIFIC RAILROAD MARENGO, ILLINOIS HIGHWAY CROSSING SIGNALS CONTROL CIRCUITS Office of Sr. AVP Engineering - Signal/TCO Omaha, Nebraska	DATE 05-21-07 SHEET 4A DWG 66.20 BEV

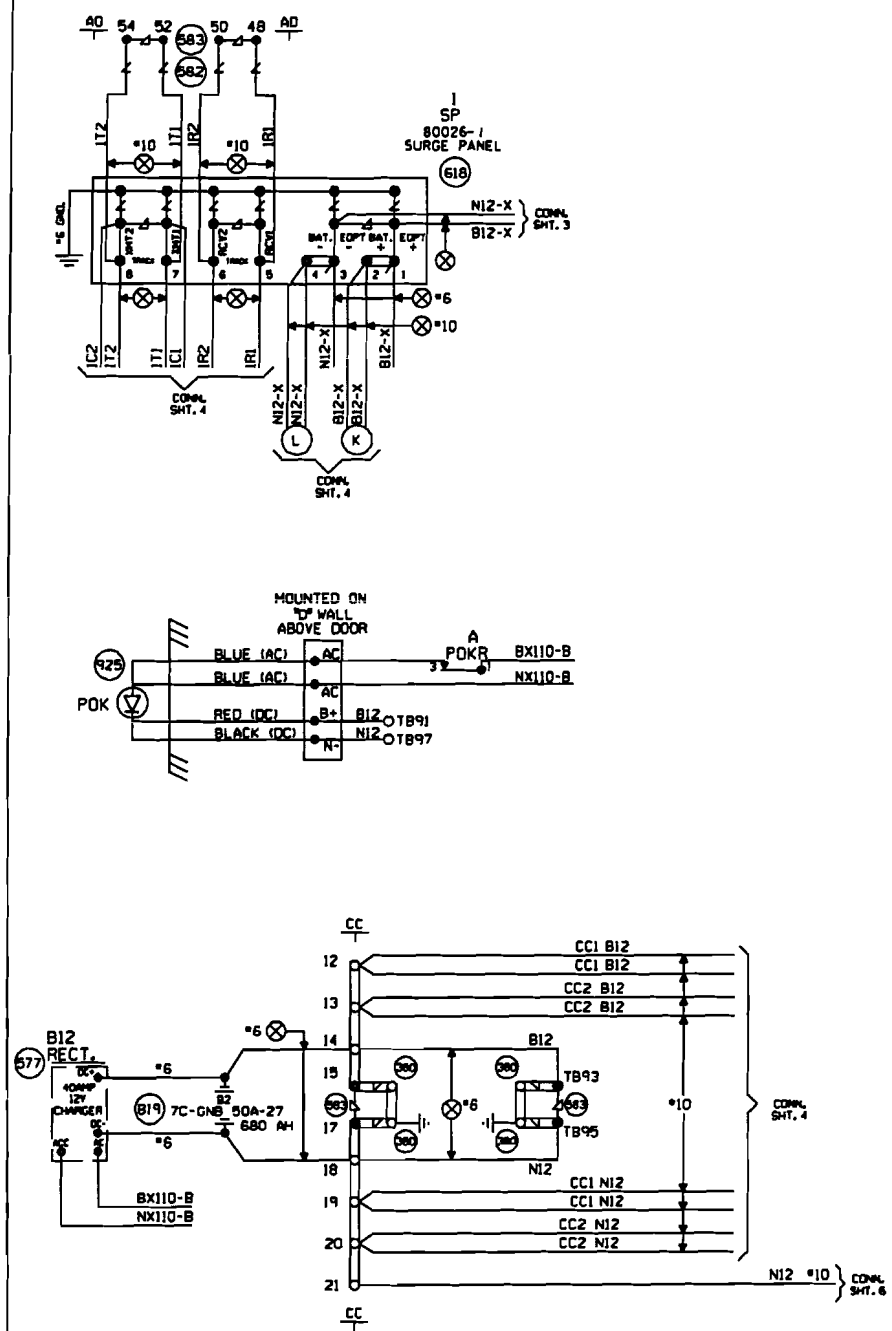

MARENGO, ILLINOIS
STATE STREET
M.P. 66.20
BELVIDERE SUBDIVISION
D.O.T.#174 572G

1 REV. 07-02-08 INSTALL FLASHERS & GATES WITH CWT AT M.P. 66.20. WO#84098 REC#15235 05-12-08 GRK JWS/NST/SSC/JJF	MODIFICATION LEVEL		UNION PACIFIC SIGNAL DESIGN	DES: SSC	UNION PACIFIC RAILROAD	DATE 06-21-07
	D.A. LAST LEVEL CHECKED	DP		DIG: SSC	MARENGO, ILLINOIS	SHEET 5
	LAST LEVEL MOD THIS TYPICAL	DP		CHK: GRK	HIGHWAY CROSSING SIGNALS	DWG 66.20
	LAST LEVEL BY DESIGNER	DP		A.F.E. 84098	CONTROL CIRCUITS	BEV
	CHANGED FROM TYPICAL?	Y		ID: BEV6620.5X	Office of Sr AVP Engineering - Signal/TCD Omaha, Nebraska	

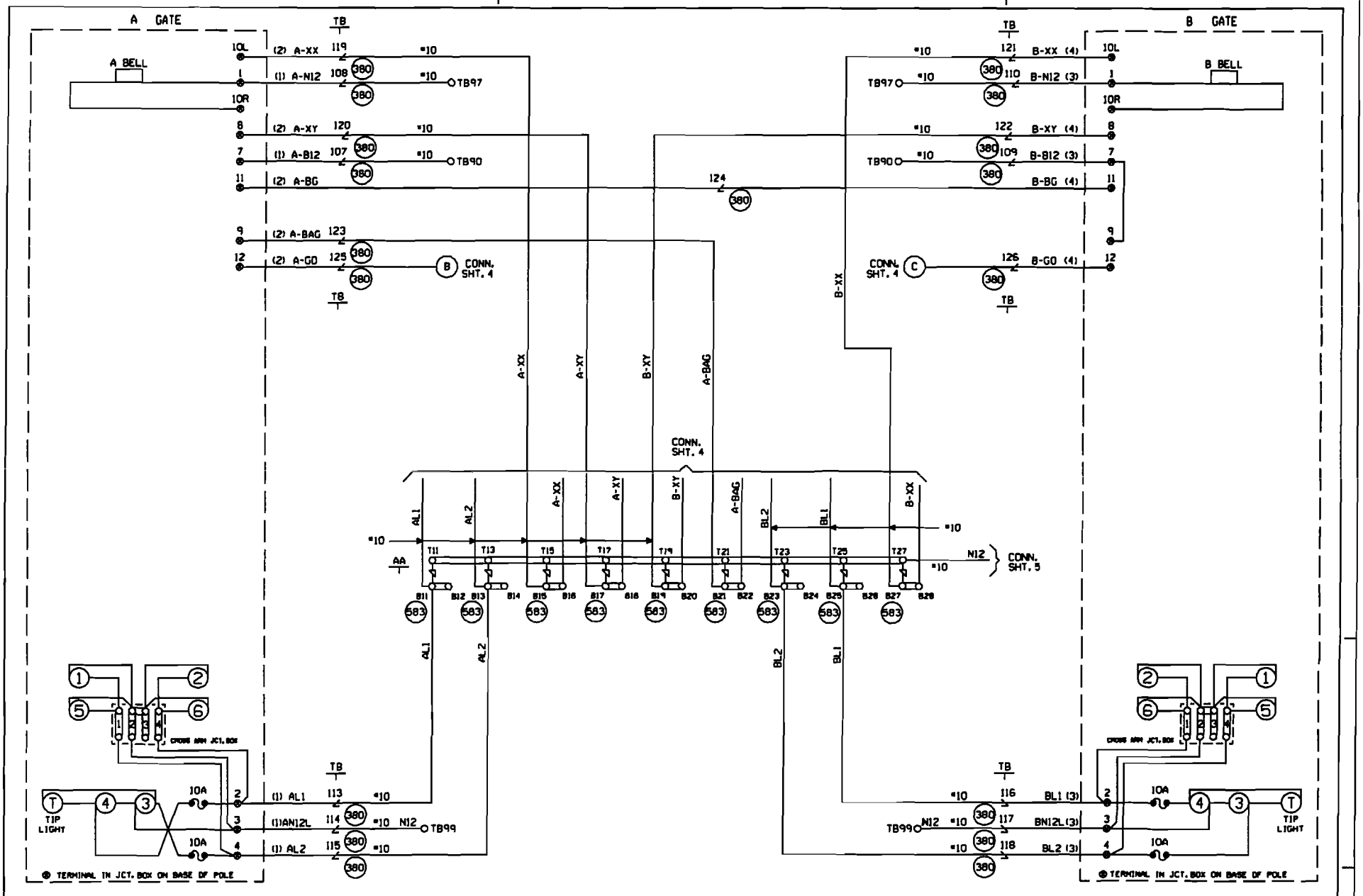

CABLE TABULATION

CABLE NO. 1 5C. NO.6 U.G.B.T.
CABLE NO. 2 7C. NO.14 U.G.B.T.
CABLE NO. 3 5C. NO.6 U.G.B.T.
CABLE NO. 4 7C. NO.14 U.G.B.T.

MARENGO, ILLINOIS
STATE STREET
M.P. 66.20
BELVIDERE SUBDIVISION
O.D.T.#174 572G

1 REV. 07-02-08 INSTALL FLASHERS & GATES WITH CWT AT M.P. 66.20. WO#84098 REC#15235 05-12-08 GRK JWS/NS1/SSC/JJF	
MODIFICATION LEVEL	
O.A. LAST LEVEL CHECKED	DP
LAST LEVEL MOD THIS TYPICAL	DP
LAST LEVEL BY DESIGNER	DP
CHANGED FROM TYPICAL?	Y
UNION PACIFIC SIGNAL DESIGN	
DES: SSC	
DIG: SSC	
CHK: GRK	
A.F.E. 84098	
ID: BEV6620.6X	

UNION PACIFIC RAILROAD

MARENGO, ILLINOIS
HIGHWAY CROSSING SIGNALS
CONTROL CIRCUITS

Office of Sr. VP Engineering • Signal/TCO Omaha, Nebraska

DATE 06-21-07
SHEET 8
DWG 66.20
BEV

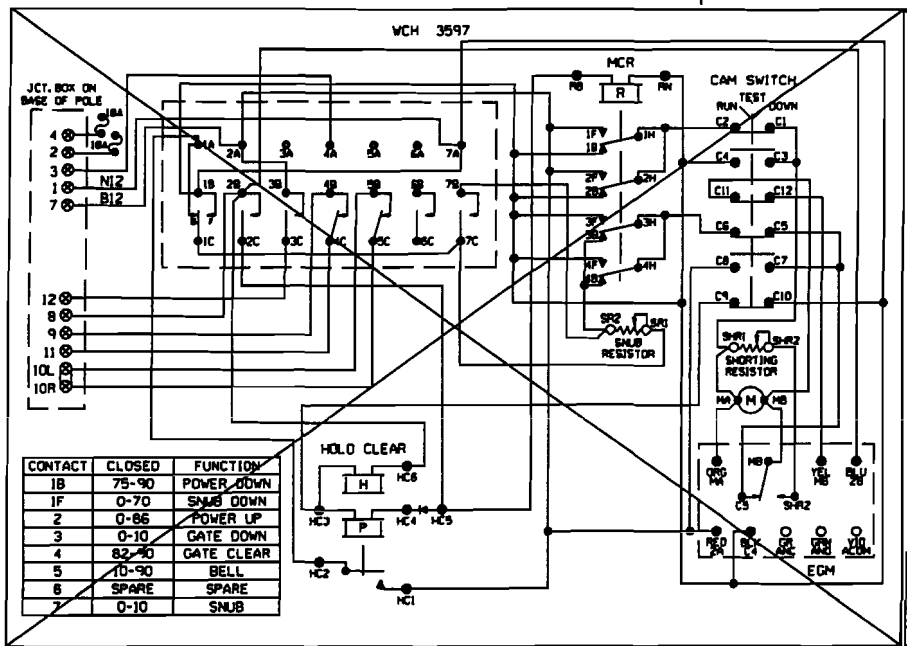

CONTACT	CLOSED	FUNCTION
1B	75-90	POWER DOWN
1F	0-70	SNUB DOWN
2	0-86	POWER UP
3	0-10	GATE DOWN
4	82-90	GATE CLEAR
5	10-90	BELL
6	SPARE	SPARE
7	0-10	SNUB

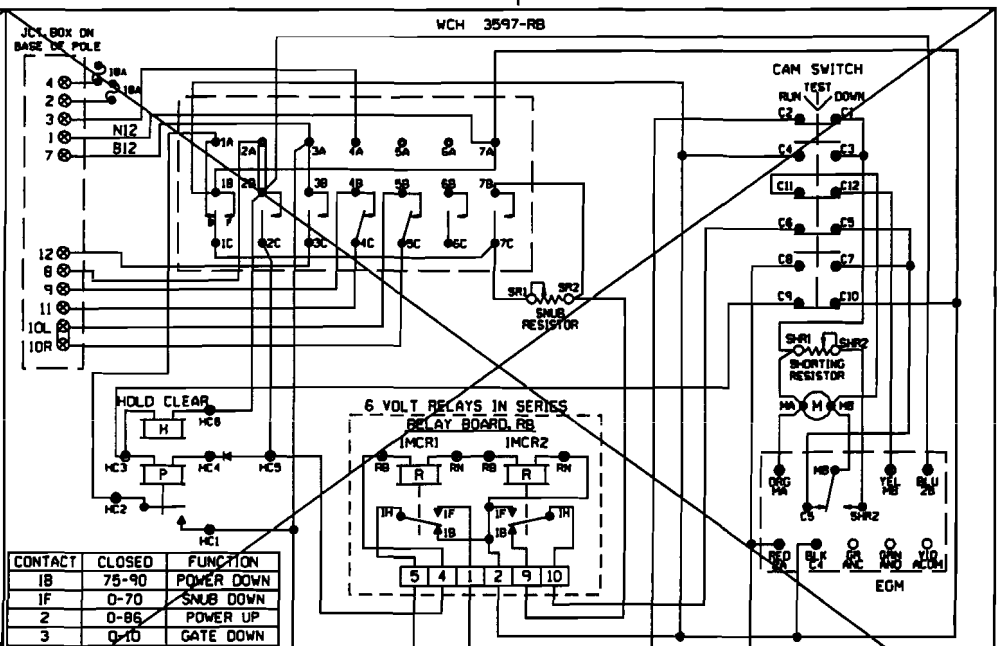

CONTACT	CLOSED	FUNCTION
1B	75-90	POWER DOWN
1F	0-70	SNUB DOWN
2	0-86	POWER UP
3	0-10	GATE DOWN
4	82-90	GATE CLEAR
5	10-90	BELL
6	SPARE	SPARE
7	0-10	SNUB

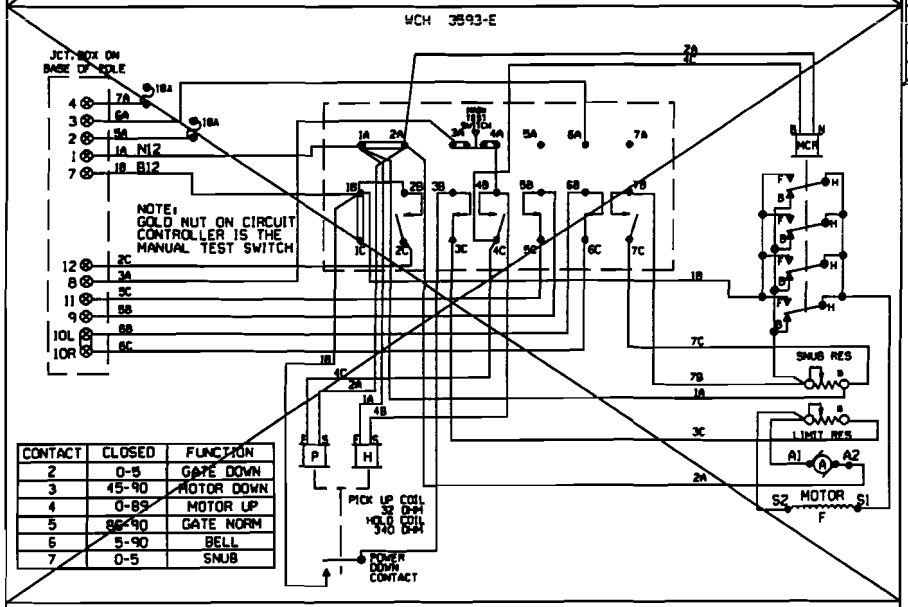

CONTACT	CLOSED	FUNCTION
2	0-5	GATE DOWN
3	45-90	MOTOR DOWN
4	0-89	MOTOR UP
5	86-90	GATE NORM
6	5-90	BELL
7	0-5	SNUB

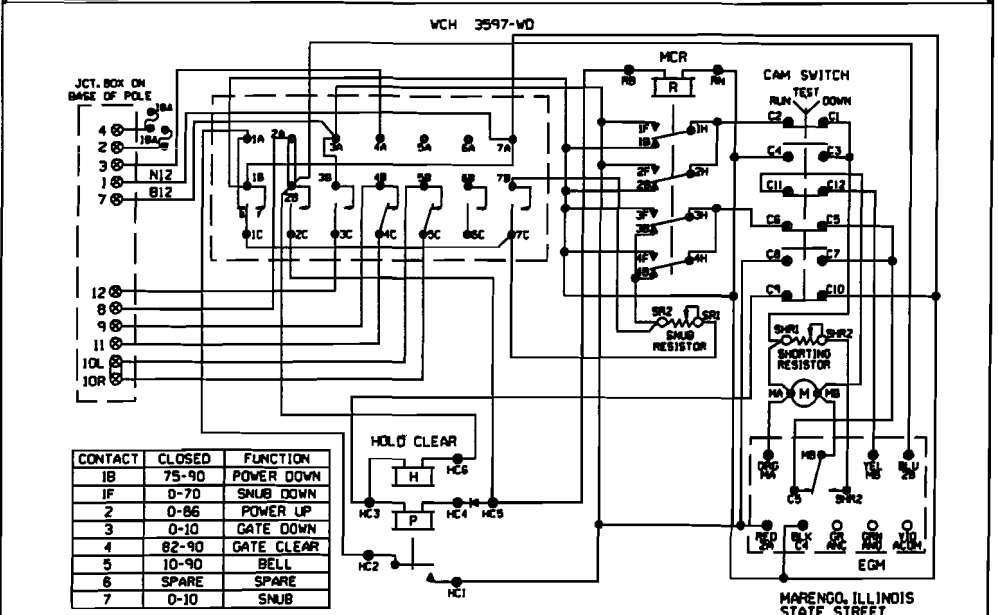

CONTACT	CLOSED	FUNCTION
1B	75-90	POWER DOWN
1F	0-70	SNUB DOWN
2	0-86	POWER UP
3	0-10	GATE DOWN
4	82-90	GATE CLEAR
5	10-90	BELL
6	SPARE	SPARE
7	0-10	SNUB

SHOW TYPE MECH. INSTALLED

ALL MECHANISMS SHOWN IN THE CLEAR POSITION

JCT. BOX ON BASE POLE

L	R	L	R
1	1	7	7
2	2	8	8
3	3	9	9
4	4	10	10
5	5	11	11
6	6	12	12

MARENGO, ILLINOIS
STATE STREET
M.P. 66.20
BELVIDERE SUBDIVISION
O.D.T.#174 572G

REV.		
1	REV. 07-02-08 INSTALL FLASHERS & GATES WITH CMT AT M.P. 66.20. WO#84098 REC#15235 05-12-08 GRK JWS/NST/SSC/JJF	

MODIFICATION LEVEL	
Q.A. LAST LEVEL CHECKED	DP
LAST LEVEL MOD THIS TYPICAL	DP
LAST LEVEL BY DESIGNER	DP
CHANGED FROM TYPICAL?	N

UNION PACIFIC — SAFETY — SIGNAL DESIGN

DES:	SSC
DIG:	SSC
CHK:	GRK
A.F.E.	84098
ID:	BEV6620.7X

UNION PACIFIC RAILROAD

MARENGO, ILLINOIS
HIGHWAY CROSSING SIGNALS
CONTROL CIRCUITS

Office of Sr. VP Engineering - Signal/TCO Omaha, Nebraska

DATE	08-21-07
SHEET	7
DWG	66.20
	BEV

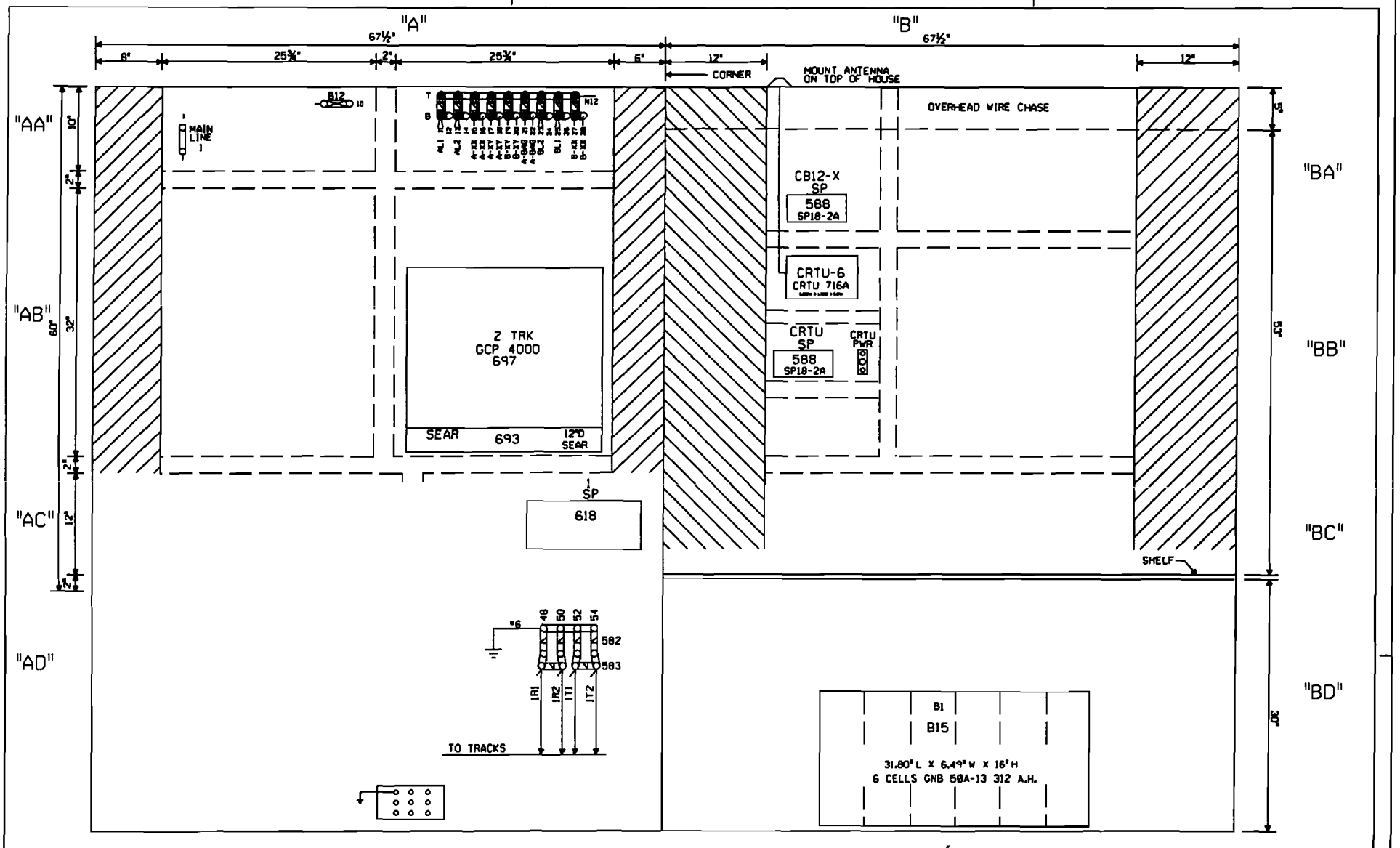

NOTE: ALL DIMENSIONS SHOWN ARE APPROXIMATE.

0 1 2 3 4 FEET

SCALE: 1.5 INCHES = 1 FOOT

MARENGO, ILLINOIS
STATE STREET
M.P. 66.20
BELVIDERE SUBDIVISION
D.O.T.#174 572G

1 REV. 07-02-08 INSTALL FLASHERS & GATES WITH CWT AT M.P. 66.20. WO#84098 REC#15235 05-12-08 GRK JWS/NST/SSC/JJF	
MODIFICATION LEVEL	
Q.A. LAST LEVEL CHECKED	DP
LAST LEVEL MOD THIS TYPICAL	DP
LAST LEVEL BY DESIGNER	DP
CHANGED FROM TYPICAL?	Y
UNION PACIFIC SAFETY SIGNAL DESIGN	
DES: SSC	
DIG: SSC	
CHK: GRK	
A.F.E. 84098	
ID: BEV6620.SX	

UNION PACIFIC RAILROAD

MARENGO, ILLINOIS
HIGHWAY CROSSING SIGNALS
CONTROL CIRCUITS

Office of Sr. VP Engineering - Signal/TCO Omaha, Nebraska

DATE	05-21-07
SHEET	8
DWG	66.20
	BEV