Typ: 091905 Ch: Y

PLAN MUST NOT BE MODIFIED WITHOUT APPROVAL OF SIGNAL ENGINEERING

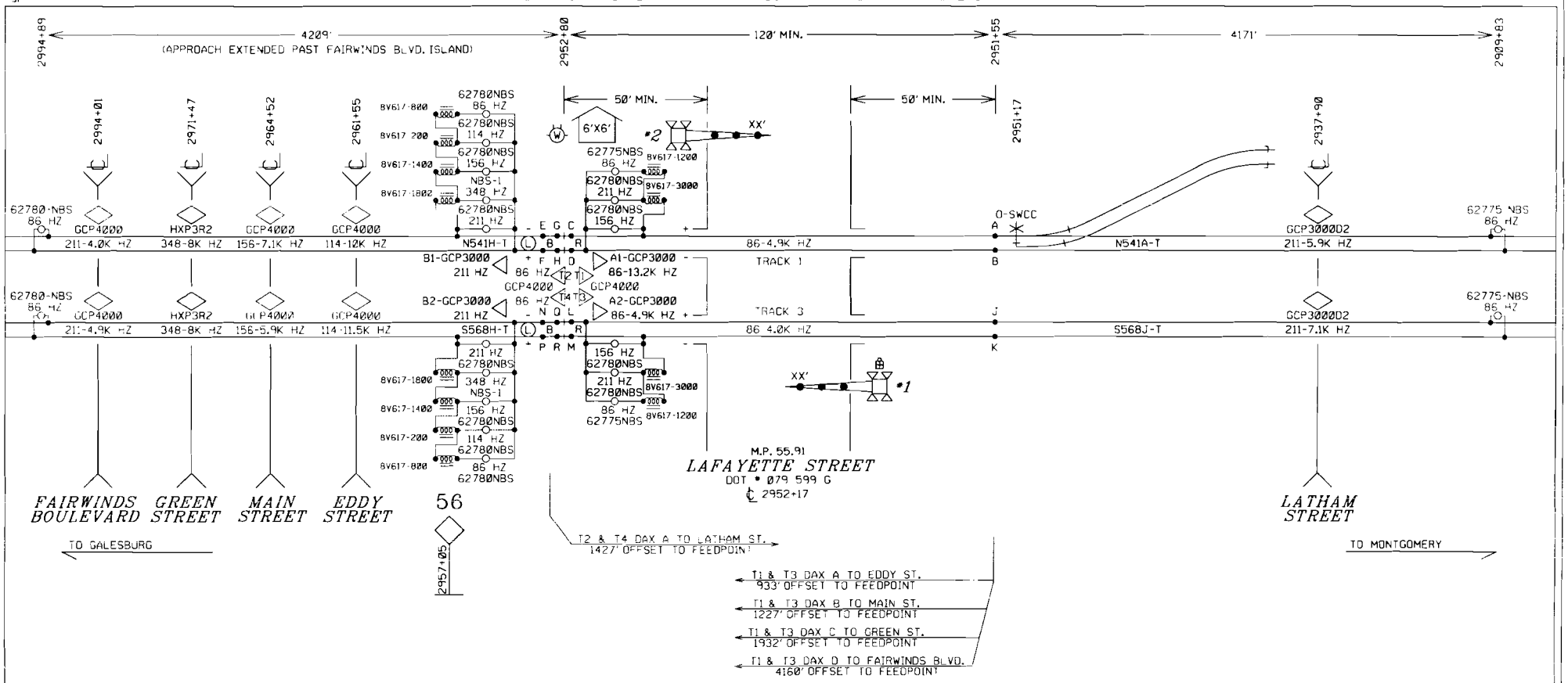

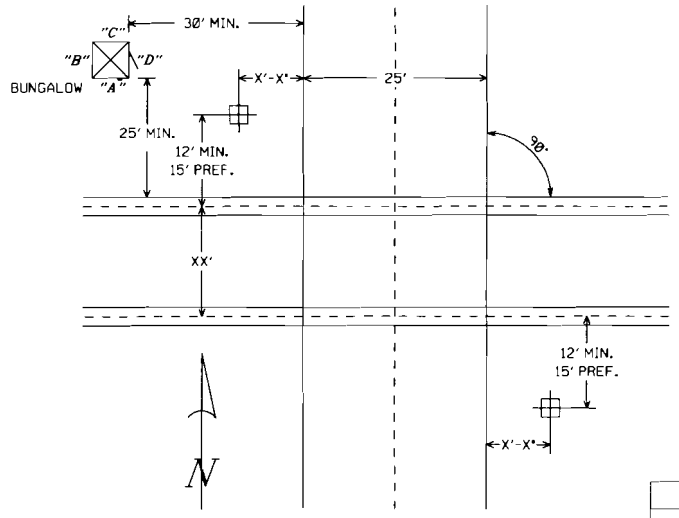

FOUNDATION PLACEMENT SKETCH
NOT TO SCALE

NOTES:

EQUIPMENT IS DESIGNED FOR 20 SECONDS MINIMUM WARNING TIME AT 79 MPH.
APPROACHES WERE LENGTHENED 1 SECOND(S) FOR WIDE OR ANGLED CROSSING (CT).
APPROACHES WERE LENGTHENED 10 SECONDS FOR SPEED VARIANCE AND BALLAST CHANGES (BT).
APPROACHES WERE LENGTHENED 5 SECONDS FOR EQUIPMENT RESPONSE TIME (ERT).
ALL LAMPS TO BE LED

NOTES:

-TEST TERMINAL
-EQUALIZER
-LINE ARRESTER
-HEAVY DUTY ARRESTER
-TWISTED WIRE 2 TURNS PER FOOT
-CONNECTION TO REC./RTU

ALL WIRES #16 AWG UNLESS OTHERWISE NOTED

BURLINGTON NORTHERN SANTA FE RAILWAY

CROSSING CIRCUIT PLAN
LAFAYETTE STREET SANDWICH, IL

DESIGNED 09-04-07 INSTALL MODE #5 GATES RSD/TRB SEQ.# 38596	REDRAWN 11-28-07 REDRAWN IN MICROSTATION RSD/ARD SEQ.# 32266							DESIGNED 11-28-07 NEW CROSSING @ FAIRWIND RSD/BES SEQ.# 32266	LS 0001	MP 55.91	SH 01 OF 10

0001055_91x01c_.dgn NOVEMBER 28, 2007

RED = IN YELLOW = OUT

Typ: 091905 Ch: Y

PLAN MUST NOT BE MODIFIED WITHOUT APPROVAL OF SIGNAL ENGINEERING

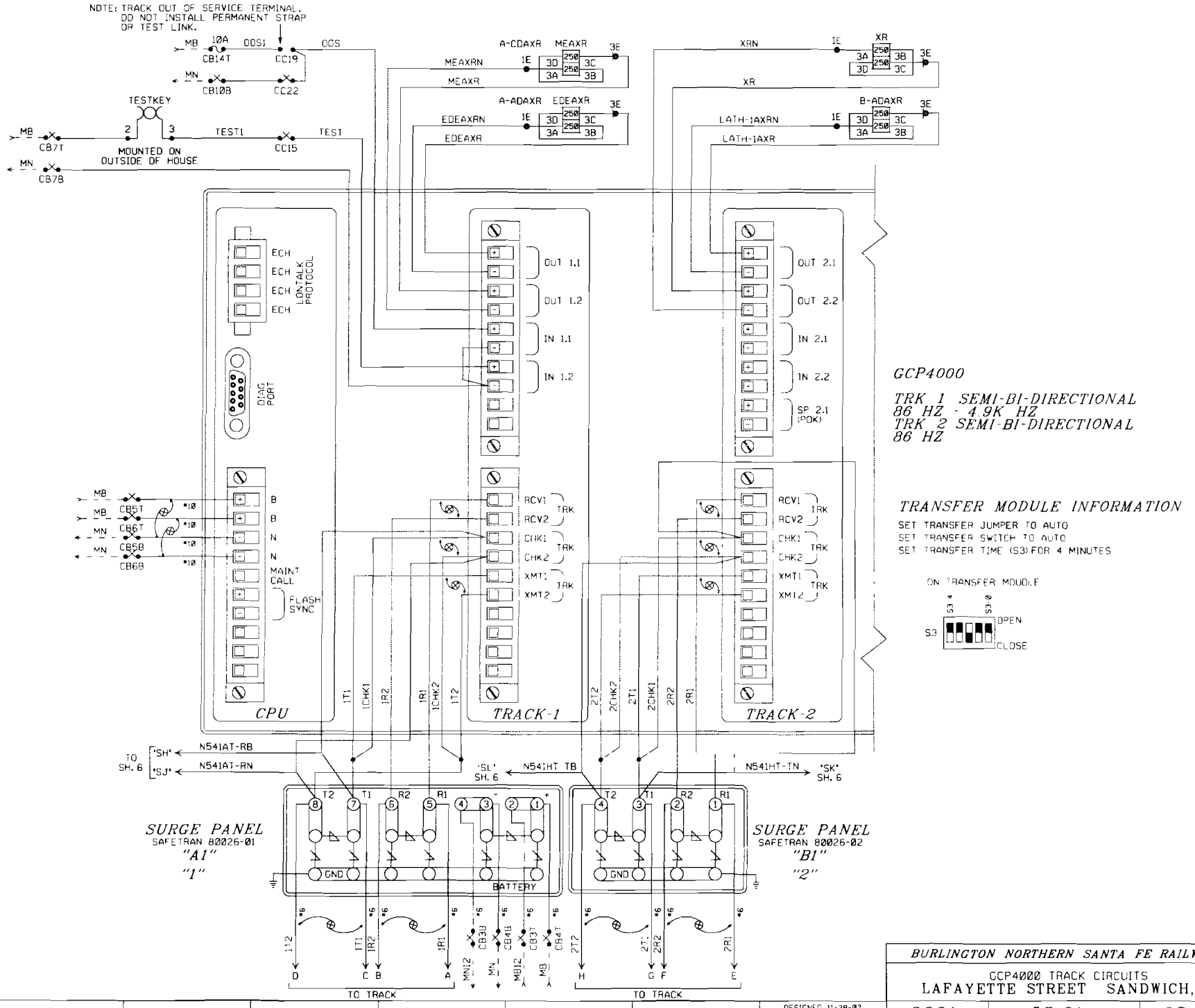

BURLINGTON NORTHERN SANTA FE RAILWAY		
GCP4000 TRACK CIRCUITS LAFAYETTE STREET SANDWICH, IL		
LS 0001	MP 55.91	SH 02 OF 10

DESIGNED 11-28-07
NEW CROSSING @ FAIRWIND
RSC/BCS SEQ.# 32266

0001055_91x02c..dgn NOVEMBER 28, 2007

RED = IN YELLOW = OUT

PLAN MUST NOT BE MODIFIED WITHOUT APPROVAL OF SIGNAL ENGINEERING

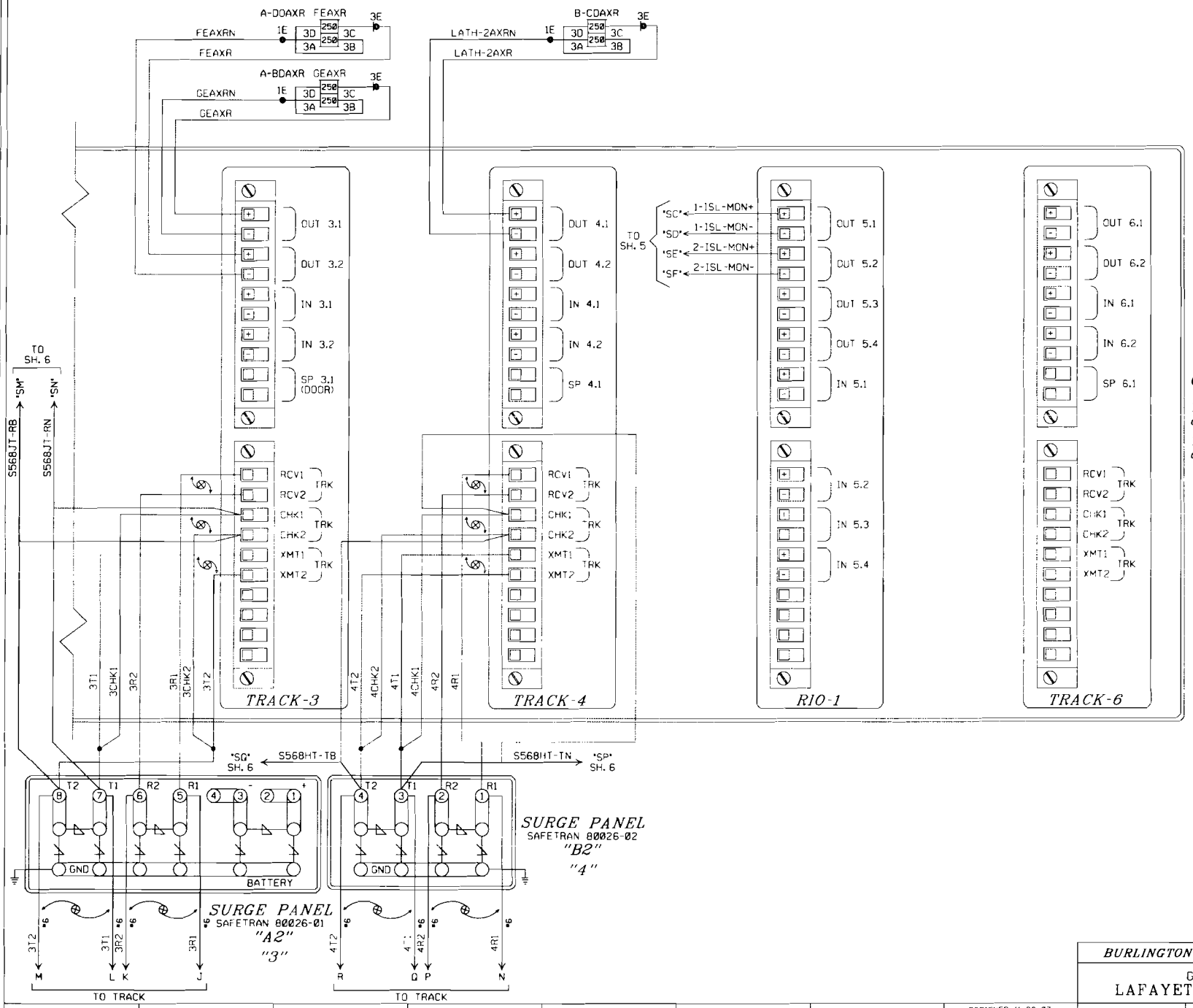

GCP4000

TRK 3 SEMI-BI-DIRECTIONAL 86 HZ - 4.0K HZ

TRK 4 SEMI-BI-DIRECTIONAL 86 HZ

BURLINGTON NORTHERN SANTA FE RAILWAY			
GCP4000 TRACK CIRCUITS LAFAYETTE STREET SANDWICH, IL			
DESIGNED 11-28-07 NEW CROSSING ● FAIRWIND RSD/BLS SEQ.# 32266	LS 0001	MP 55.91	SH 03 OF 10

RED = IN YELLOW = OUT

PLAN MUST NOT BE MODIFIED WITHOUT APPROVAL OF SIGNAL ENGINEERING

GCP4000 PROGRAMMING

Minimum Program Steps Report

Location and SIN

DOT Number: 079599G
Milepost Number: 55.91
Site Name: LAFAYETTE STREET

SIN: 702200000016 •

• Parameter is part of office check number calculation.

MCF and Template Selection

MCF Name: GCP-T6X-01-2.mcf
MCF Revision: 012
MCFCRC: 0DFE7A0C

Template = 1D:3 Uni pairs •

• Parameter is part of office check number calculation.

Minimum Program Steps

TEMPLATE: module configuration
Track 3 Slot = Track •
Track 4 Slot = Track •
Track 5/RIO 2 Slot = RIO •
SSCC 1 Slot = Not Used •
SSCC 2 Slot = Not Used •
SEAR Used = No •

TEMPLATE: track 1-Uni, Island
Track 1 : GCP Frequency = 86 Hz
Track 1 : Approach Distance = 4171 ft See Plans
Track 1 : Prime Warning Time = 31 sec •
Track 1 : GCP Transmit Level = Medium Set in Field
Track 1 : Uni/Bi/Sim-Bidirnl = Sim. Bidirnl •
Track 1 : Isl Frequency = 4.9 kHz
Track 1 : Island Distance = 125 ft Verify in Field

TEMPLATE: track 1 Daxes
Track 1 : Dax A Used = Yes •
Track 1 : Dax A Warning Time = 31 sec •
Track 1 : Dax A Offset Distance = 933 ft Verify in Field
Track 1 : Dax B Used = Yes •
Track 1 : Dax B Warning Time = 31 sec •
Track 1 : Dax B Offset Distance = 1227 ft Verify in Field
Track 1 : Dax C Used = Yes •
Track 1 : Dax C Warning Time = 31 sec •
Track 1 : Dax C Offset Distance = 1932 ft Verify in Field

TEMPLATE: track 2-Uni, No Island
Track 2 : GCP Frequency = 86 Hz
Track 2 : Approach Distance = 4209 ft Verify in Field
Track 2 : Prime Warning Time = 31 sec •
Track 2 : GCP Transmit Level = Medium Set in Field
Track 2 : Uni/Bi/Sim-Bidirnl = Sim. Bidirnl •

TEMPLATE: track 2 Daxes
Track 2 : Dax A Used = Yes •
Track 2 : Dax A Warning Time = 33 sec •
Track 2 : Dax A Offset Distance = 1427 ft Verify in Field

TEMPLATE: track 3-Uni, Island
Track 3 : GCP Frequency = 86 Hz
Track 3 : Approach Distance = 4171 ft See Plans
Track 3 : Prime Warning Time = 31 sec •
Track 3 : GCP Transmit Level = Medium Set in Field
Track 3 : Uni/Bi/Sim-Bidirnl = Sim. Bidirnl •
Track 3 : Isl Frequency = 4.0 kHz
Track 3 : Island Distance = 125 ft Verify in Field

TEMPLATE: track 3 Daxes
Track 3 : Dax A Used = Yes •
Track 3 : Dax A Warning Time = 31 sec •
Track 3 : Dax A Offset Distance = 933 ft Verify in Field
Track 3 : Dax B Used = Yes •
Track 3 : Dax B Warning Time = 31 sec •
Track 3 : Dax B Offset Distance = 1227 ft Verify in Field
Track 3 : Dax C Used = Yes •
Track 3 : Dax C Warning Time = 31 sec •
Track 3 : Dax C Offset Distance = 1932 ft Verify in Field

TEMPLATE: track 4-Uni, No Island
Track 4 : GCP Frequency = 86 Hz
Track 4 : Approach Distance = 4209 ft See Plans
Track 4 : Prime Warning Time = 31 sec •
Track 4 : GCP Transmit Level = Medium Set in Field
Track 4 : Uni/Bi/Sim-Bidirnl = Sim. Bidirnl •

TEMPLATE: track 4 Daxes
Track 4 : Dax A Used = Yes •
Track 4 : Dax A Warning Time = 33 sec •
Track 4 : Dax A Offset Distance = 1427 ft Verify in Field

TEMPLATE: track Anding
AND 2 Used = Yes •
AND 3 Used = Yes •
AND 4 Used = Yes •

TEMPLATE: AND 1 XR
AND 1 Enable Used = Yes •

TEMPLATE: AND 2
AND 2 Track 1 = Dax A •
AND 2 Track 3 = Dax A •

TEMPLATE: AND 3
AND 3 Track 1 = Dax B •
AND 3 Track 3 = Dax B •

TEMPLATE: AND 4
AND 4 Track 1 = Dax C •
AND 4 Track 3 = Dax C •

TEMPLATE: OP assignment 1
OUT 1.1 = AND 2 •
OUT 1.2 = AND 3 •
OUT 2.1 = T2 Dax A •
OUT 2.2 = AND 1 XR •
OUT 3.1 = AND 4 •
OUT 3.2 = AND 5 •
OUT 4.1 = T4 Dax A •

TEMPLATE: OP assignment 2
OUT 5.1 = T1 Island •
OUT 5.2 = T3 Island •

TEMPLATE: IP assignment 1
IN 1.1 = Out Of Service IP 1 •
IN 1.2 = AND 1 XR Enable •

PREDICTORS: track 1
Track 1 : Dax D Used = Yes •

PREDICTORS: track 3
Track 3 : Dax D Used = Yes •

GCP: track 1 Dax D
Track 1 : Dax D Warning Time = 45 sec •
Track 1 : Dax D Offset Distance = 4160 ft •

GCP: track 3 Dax D
Track 3 : Dax D Warning Time = 45 sec •
Track 3 : Dax D Offset Distance = 4160 ft •

AND: track Anding
AND 5 Used = Yes •

AND: AND 5
AND 5 Track 1 = Dax D •
AND 5 Track 3 = Dax D •

ADVANCED: out of service
DDS Control = Display+DDS IPs •

ADVANCED: out of service 2
T2 DDS Control = DDS Input 1 •
T3 DDS Control = DDS Input 1 •
T4 DDS Control = DDS Input 1 •

• Parameter is part of office check number calculation.

Check Numbers

Office Check Number: 1BE45A60
Config. Check Number: 1D29612B
(Based on MCF Revision 012)

Parameters not part of office check number calculation:

Track 1 : GCP Frequency = 86 Hz
Track 1 : Approach Distance = 4171 ft See Plans
Track 1 : GCP Transmit Level = Medium Set in Field
Track 1 : Isl Frequency = 4.9 kHz
Track 1 : Island Distance = 125 ft Verify in Field
Track 1 : Dax A Offset Distance = 933 ft Verify in Field
Track 1 : Dax B Offset Distance = 1227 ft Verify in Field
Track 1 : Dax C Offset Distance = 1932 ft Verify in Field
Track 2 : GCP Frequency = 86 Hz
Track 2 : Approach Distance = 4209 ft Verify in Field
Track 2 : GCP Transmit Level = Medium Set in Field
Track 2 : Dax A Offset Distance = 1427 ft Verify in Field
Track 3 : GCP Frequency = 86 Hz
Track 3 : Approach Distance = 4171 ft See Plans
Track 3 : GCP Transmit Level = Medium Set in Field
Track 3 : Isl Frequency = 4.0 kHz
Track 3 : Island Distance = 125 ft Verify in Field
Track 3 : Dax A Offset Distance = 933 ft Verify in Field
Track 3 : Dax B Offset Distance = 1227 ft Verify in Field
Track 3 : Dax C Offset Distance = 1932 ft Verify in Field
Track 4 : GCP Frequency = 86 Hz
Track 4 : Approach Distance = 4209 ft See Plans
Track 4 : GCP Transmit Level = Medium Set in Field
Track 4 : Dax A Offset Distance = 1427 ft Verify in Field

Comments

<none>

Configuration Package File

Filename: 0001055_91x00c.pac
Path: H:\projects\32266\MP 55.91 LAFAYETTE ST\
Date/Time: 1/03/2008 13:57:11

ALL NEW

BURLINGTON NORTHERN SANTA FE RAILWAY

GCP4000 PROGRAM
LAFAYETTE STREET SANDWICH, IL

DESIGNED 11-28-07
NEW CROSSING @ FAIRWIND
RSD/BES SEQ.# 32266

LS 0001 | MP 55.91 | SH 04 OF 10

PLAN MUST NOT BE MODIFIED WITHOUT APPROVAL OF SIGNAL ENGINEERING

PROGRAM _____

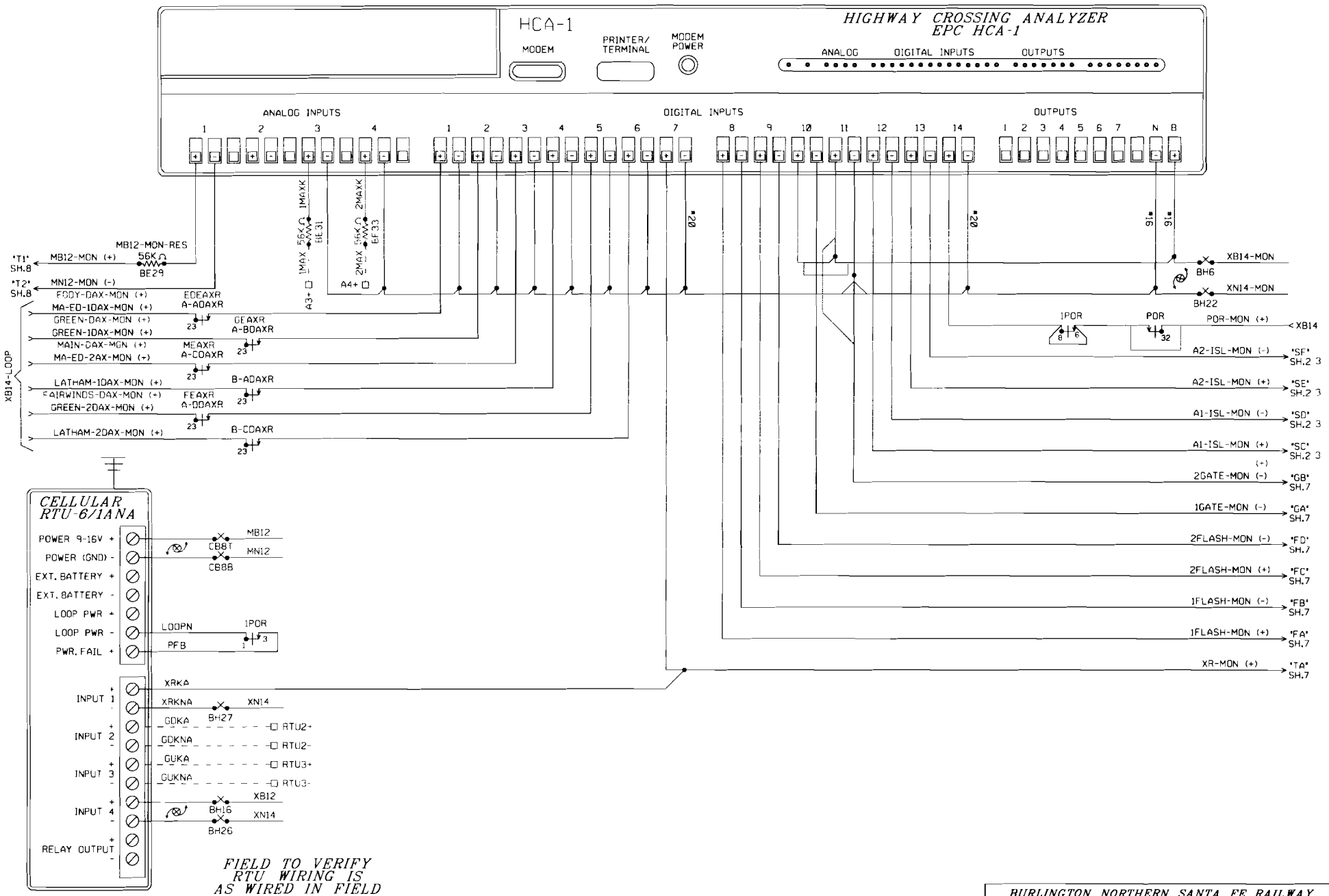

FIELD TO VERIFY RTU WIRING IS AS WIRED IN FIELD

BNSF STANDARD CONFIGURATION 12

BURLINGTON NORTHERN SANTA FE RAILWAY

RECORDER, DAX, AND SIGNAL CIRCUITS
LAFAYETTE STREET SANDWICH, IL

REDRAWN 11-28-07 REDRAWN IN MICROSTATION RSD/RRD SEQ.# 32266							DESIGNED 11-28-07 NEW CROSSING @ FAIRWIND RSD/BES SEQ.# 32266	LS 0001	MP 55.91	SH 05 OF 10

0001055_91x05c_.dgn NOVEMBER 28, 2007

RED = IN YELLOW = OUT

PLAN MUST NOT BE MODIFIED WITHOUT APPROVAL OF SIGNAL ENGINEERING

SWCC LEGEND:

N - FULL NORMAL TO, BUT NOT INCLUDING, ¼" FROM NORMAL
B-R - ¼" FROM NORMAL TO FULL REVERSE
N-O - ¼" FROM REVERSE TO FULL NORMAL
R - FULL REVERSE TO, BUT NOT INCLUDING, ¼" FROM REVERSE

SWCC JUMPER CONFIGURATION

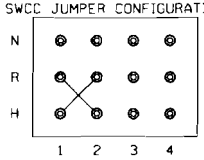

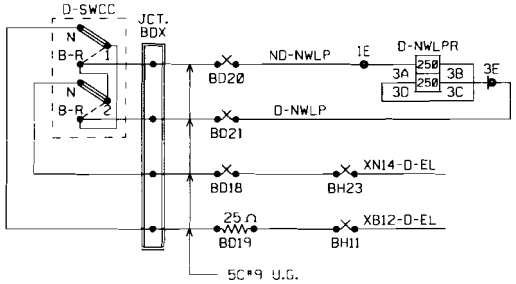

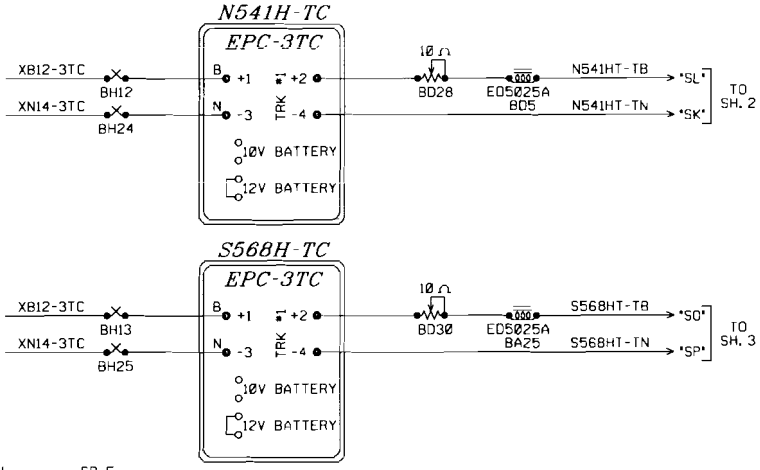

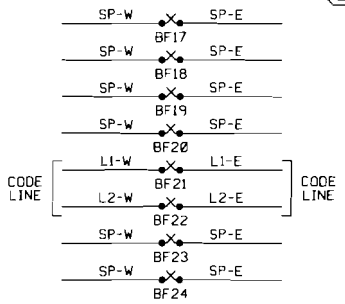

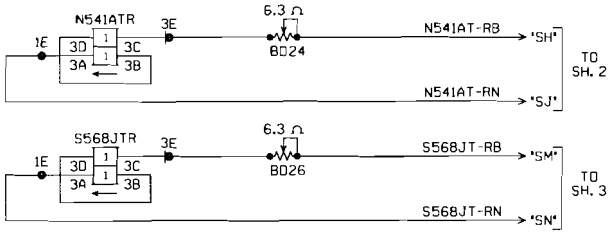

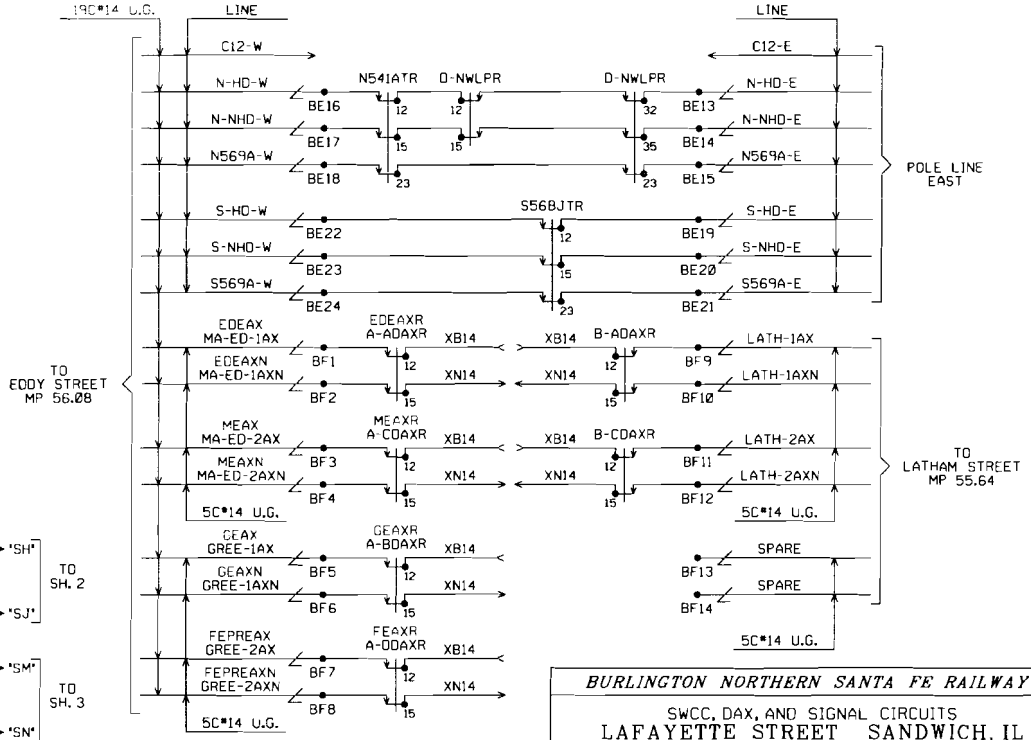

BURLINGTON NORTHERN SANTA FE RAILWAY

SWCC, DAX, AND SIGNAL CIRCUITS
LAFAYETTE STREET SANDWICH, IL

REDRAWN 11-28-07 REDRAWN IN MICROSTATION RSD/ARD SEQ.# 32266						DESIGNED 11-28-07 NEW CROSSING # FAIRMIND RSD/BES SEQ.# 32266	LS 0001	MP 55.91	SH 06 OF 10

RED = IN YELLOW = OUT

PLAN MUST NOT BE MODIFIED WITHOUT APPROVAL OF SIGNAL ENGINEERING

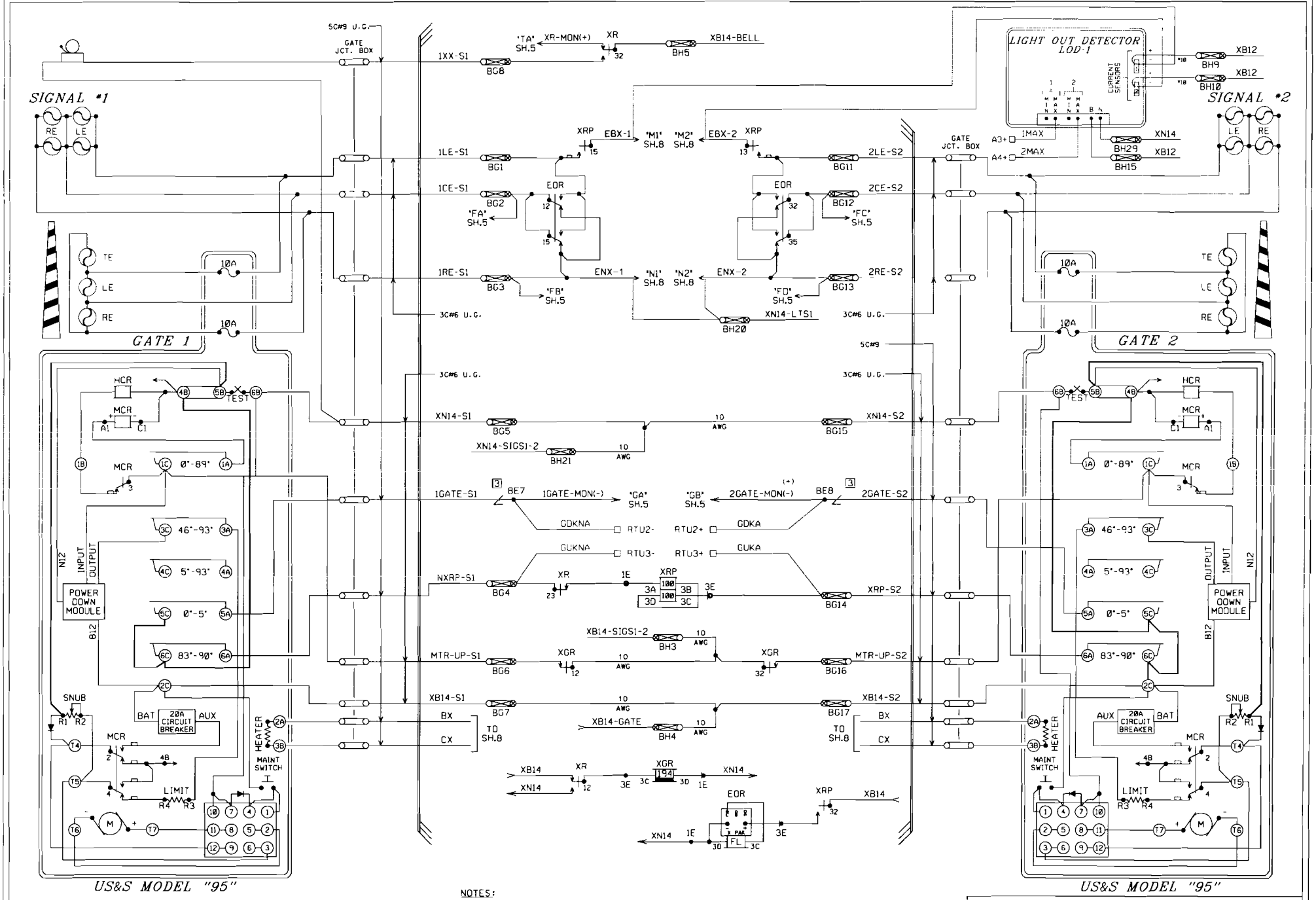

NOTES:

1. ALL LIGHT WIRES THIS PAGE ARE TO BE #10 AWG.

BURLINGTON NORTHERN SANTA FE RAILWAY

GATE AND FLASHER CIRCUITS
LAFAYETTE STREET SANDWICH, IL

DESIGNED 09-04-07
INSTALL MODEL 95 GATES
RSO/TRB SEQ.# 36556

DESIGNED 11-28-07
NEW CROSSING @ FAIRWIND
RSO/BES SEQ.# 32266

LS 0001 | MP 55.91 | SH 07 OF 10

0001055_91x07c_.dgn NOVEMBER 28, 2007

RED = IN YELLOW = OUT

PLAN MUST NOT BE MODIFIED WITHOUT APPROVAL OF SIGNAL ENGINEERING

TRANSFORMER NOTES:

TAPS TO THE POWER OFF RELAY MUST SUPPLY THE MAXIMUM VOLTAGE OUTPUT OF THE TRANSFORMER.

TAPS FOR THE LIGHTING CIRCUITS SHALL BE SELECTED TO PROVIDE THE PRESCRIBED VOLTAGE MEASURED AT THE BULBS.

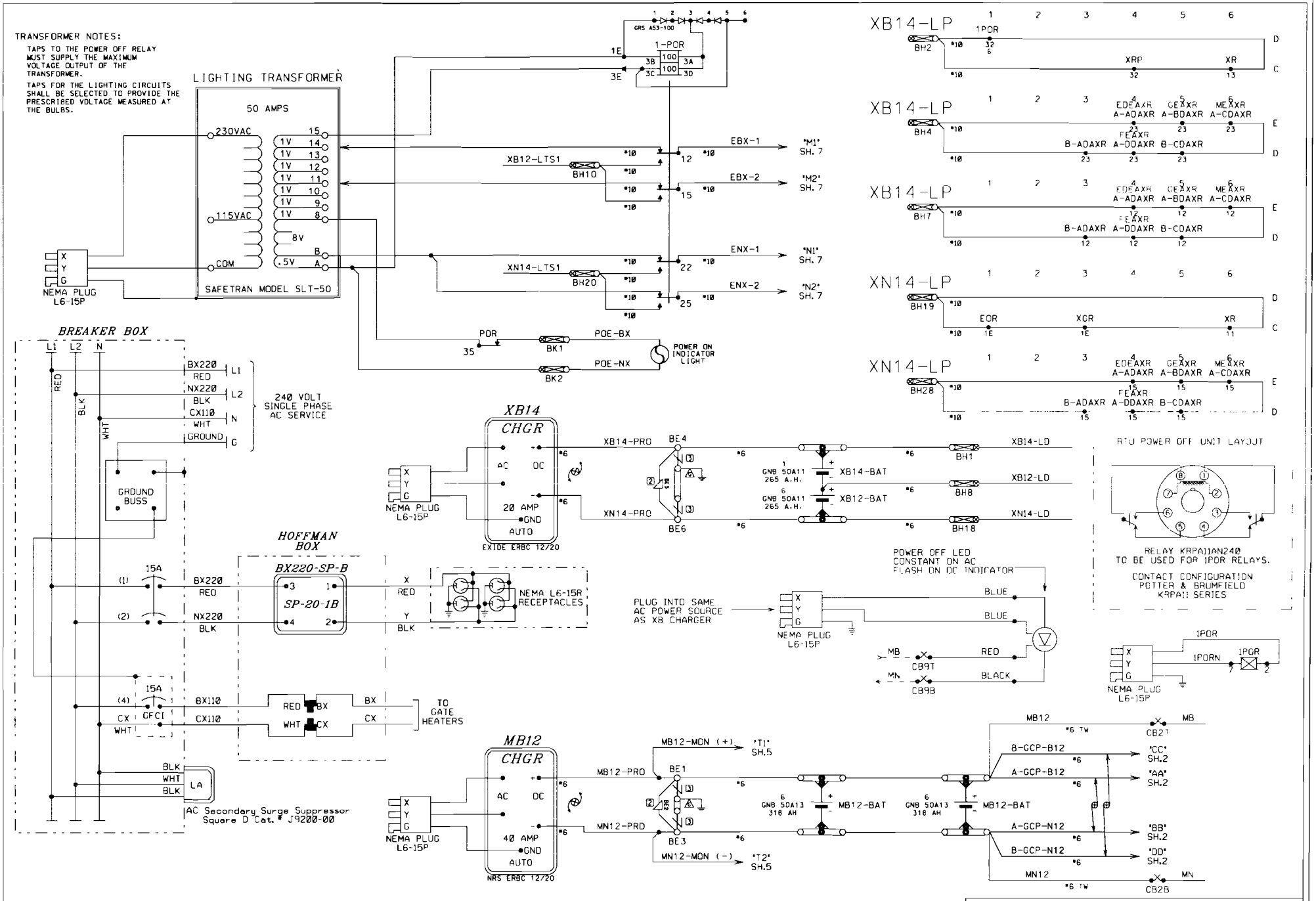

BURLINGTON NORTHERN SANTA FE RAILWAY

LAFAYETTE STREET SANDWICH, IL

REDRAWN 11-28-07 REDRAWN IN MICROSTATION RSD/RRD SEQ.# 32266	DESIGNED 11-28-07 NEW CROSSING @ FAIRWIND RSD/BES SEQ.# 32266	LS 0001	MP 55.91	SH 08 OF 10

0001055_91x08c_.dgn NOVEMBER 28, 2007

RED = IN YELLOW = OUT

PLAN MUST NOT BE MODIFIED WITHOUT APPROVAL OF SIGNAL ENGINEERING

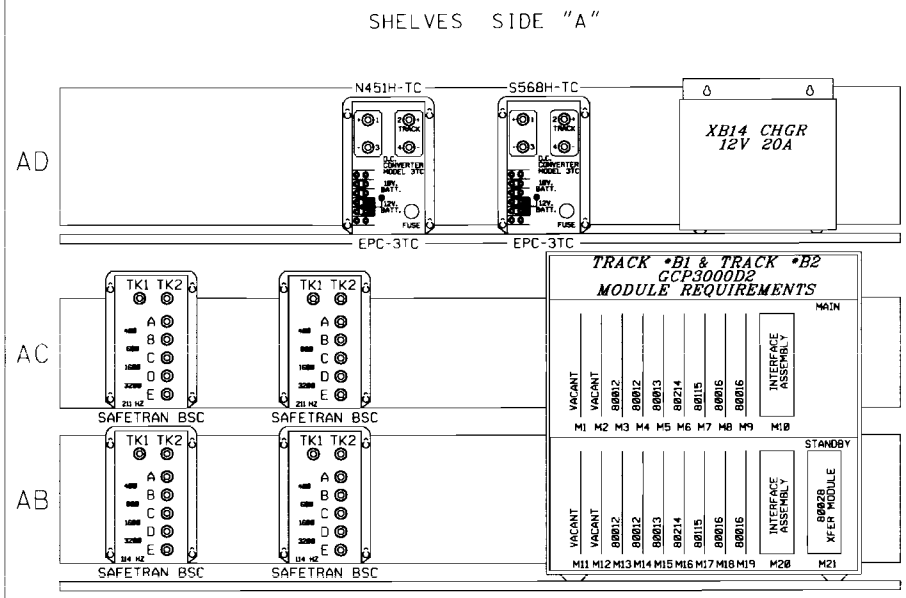

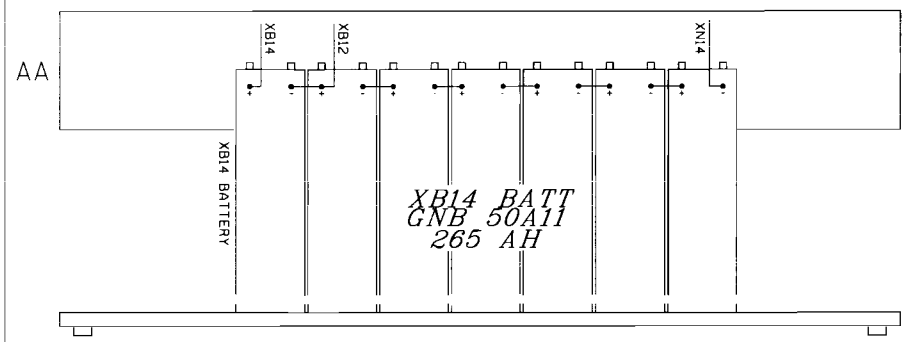

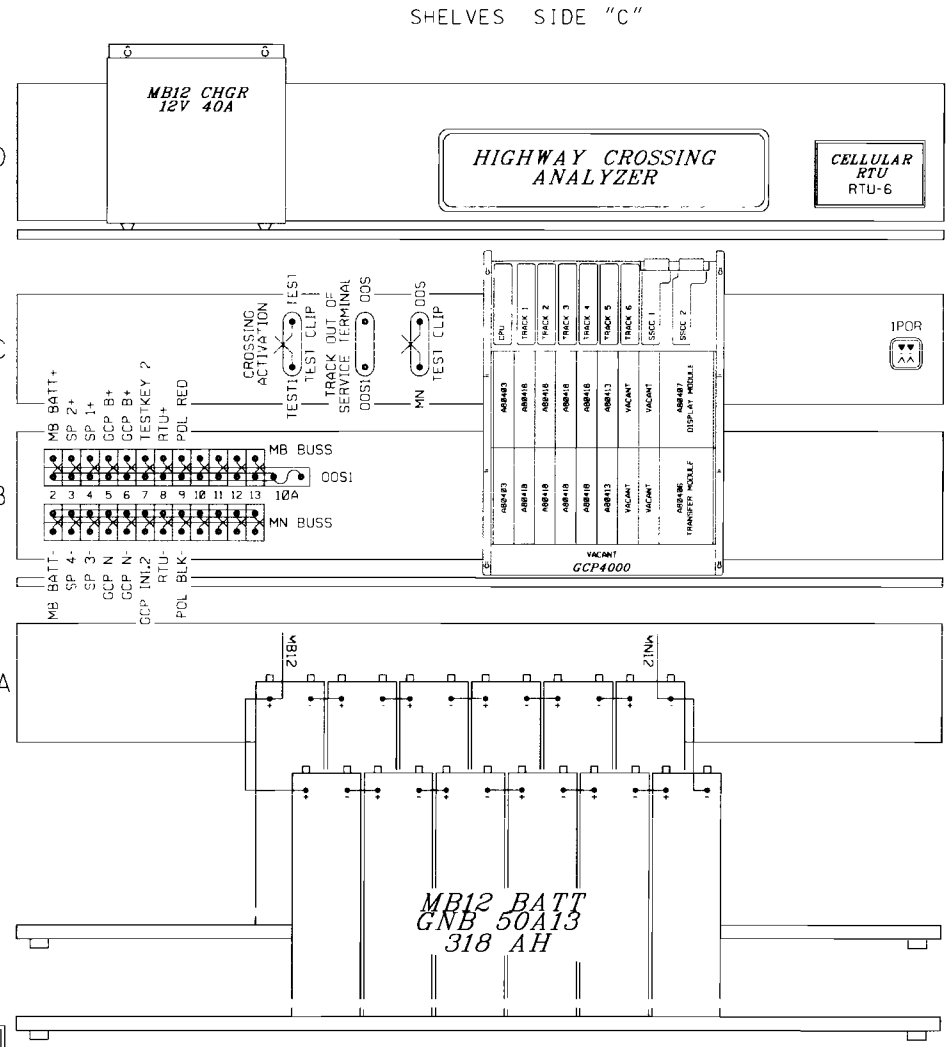

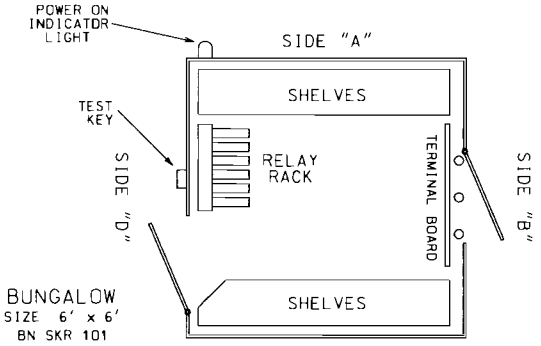

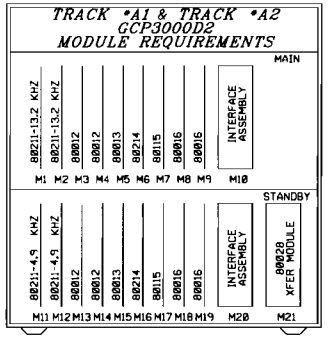

← REMOVED FROM SIDE C

BURLINGTON NORTHERN SANTA FE RAILWAY

LAFAYETTE STREET SANDWICH, IL

REDRAWN 11-28-07 REDRAWN IN MICROSTATION RSD/RRD SEQ.# 32266							DESIGNED 11-28-07 NEW CROSSING @ FAIRWIND RSD/BES SEQ.# 32266	LS 0001	MP 55.91	SH 09 OF 10

0001055_91x09c_.dgn NOVEMBER 28, 2007

RED = IN YELLOW = OUT

Typ: 091905 Ch: Y

PLAN MUST NOT BE MODIFIED WITHOUT APPROVAL OF SIGNAL ENGINEERING

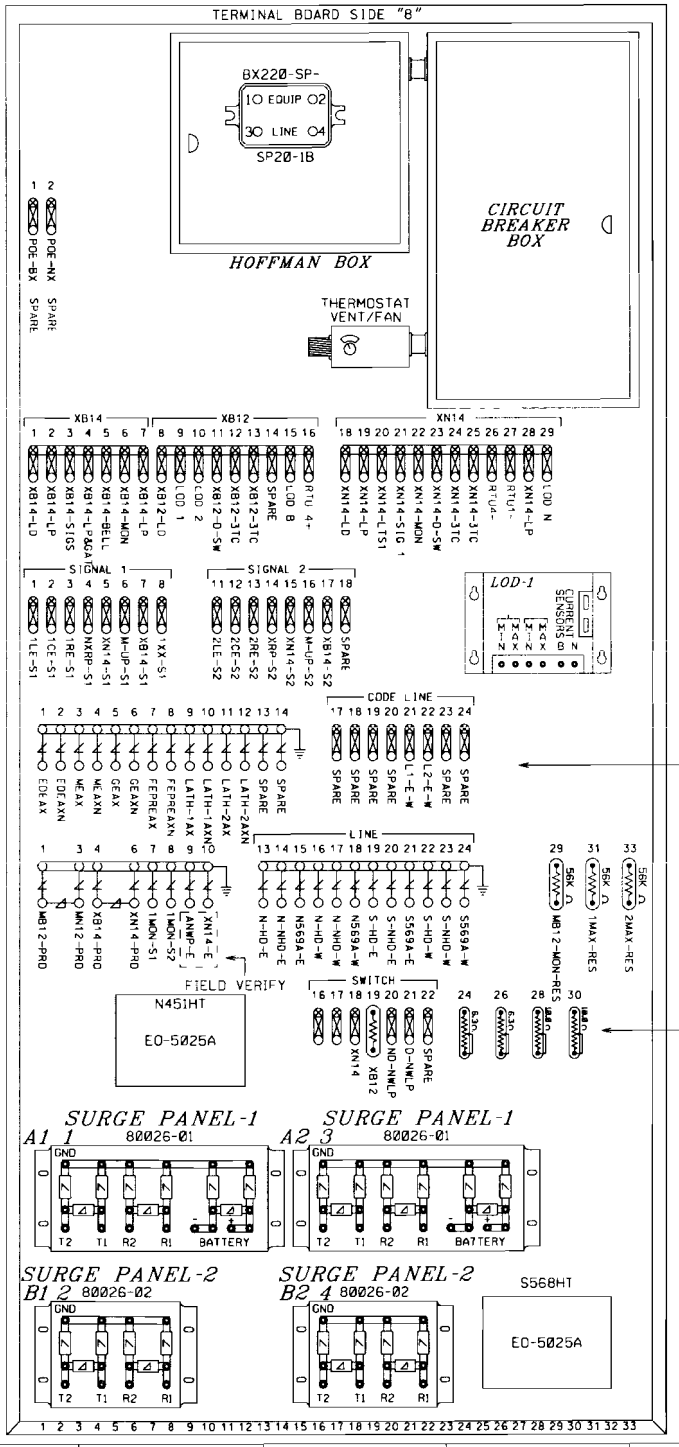

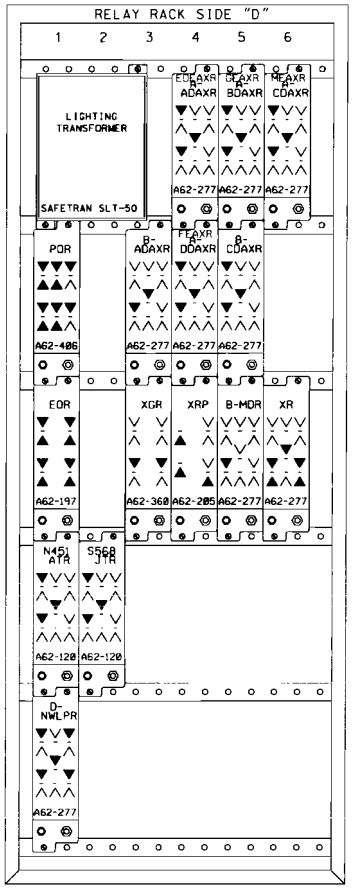

RELAY CROSS REFERENCE

GRS	SAFETRAN
A62-120	400510
A62-197	400700-7X
A62-205	400021
A62-277	400004
A62-360	400200
A62-406	400800

▼ = CONTACT USED

V = CONTACT NOT USED

BURLINGTON NORTHERN SANTA FE RAILWAY

LAFAYETTE STREET SANDWICH, IL

REDRAWN 04-02-07
REDRAWN IN MICROSTATION
RSD/RRD SEQ.# 32266

DESIGNED 11-28-07
NEW CROSSING @ FAIRWIND
RSD/BES SEQ.# 32266

LS 0001 | MP 55.91 | SH 10 OF 10

0001055_91x10c..dgn NOVEMBER 28, 2007

RED = IN YELLOW = OUT