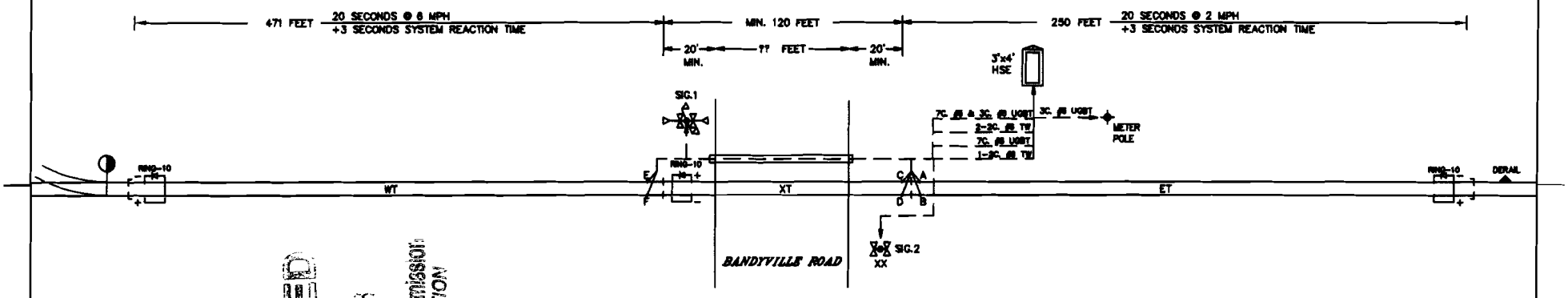

RECEIVED
JUL 18 2008
Illinois Commerce Commission
RAIL SAFETY SECTION

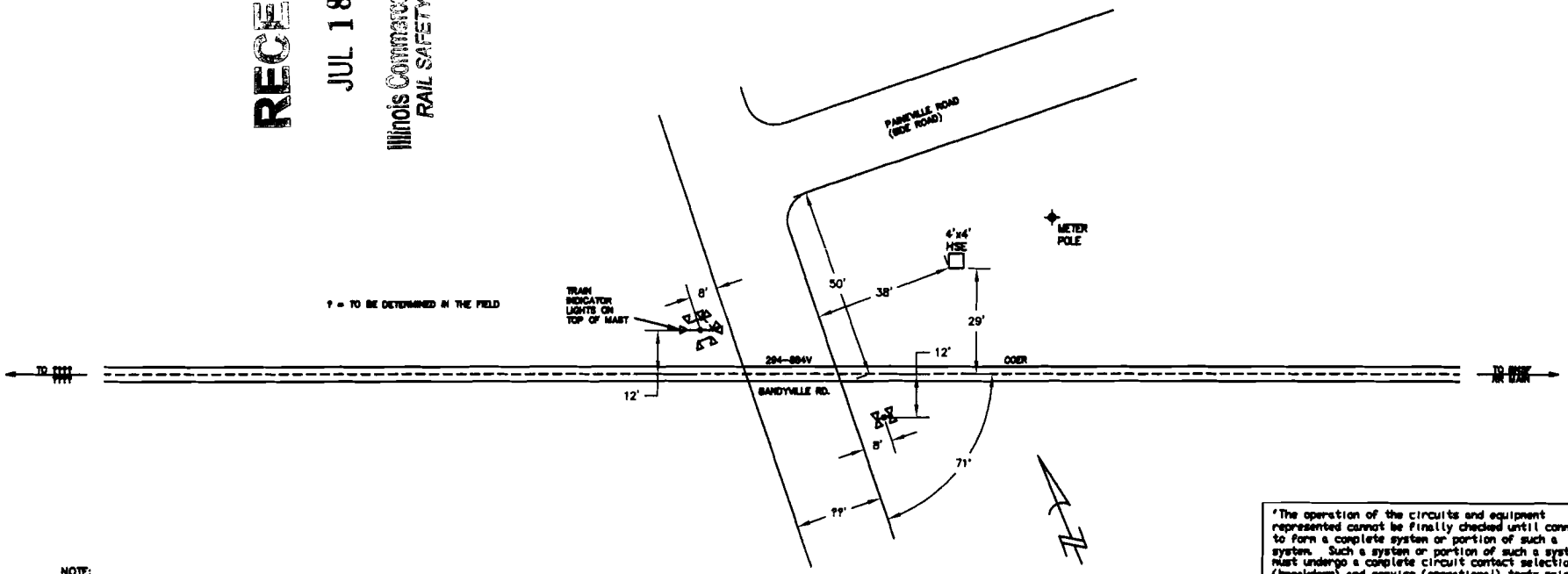

FOUNDATION PLACEMENT SKETCH
SCALE: 1" = 20'

'The operation of the circuits and equipment represented cannot be finally checked until connected to form a complete system or portion of such a system. Such a system or portion of such a system must undergo a complete circuit contact selection (breakdown) and service (operational) tests prior to being placed into regular service.'

NOTE:
All traffic control devices shall be consistent with the design and application of the standards contained in the "Manual on Uniform Traffic Control Devices", provided by the U.S. Department of Transportation and Federal Highway Administration.

LEGEND

1. = TWO WAY INDICATION FLASHING LIGHT SIGNAL
2. XX = BELL
3. = RING 10 TRACK RECTIFIER
4. OR = INSULATED RAIL JOINT

THE OPERATION OF THE CIRCUITS AND EQUIPMENT REPRESENTED CANNOT BE FINALLY CHECKED UNTIL CONNECTED TO FORM A COMPLETE SYSTEM OR PORTION OF SUCH SYSTEM. SUCH SYSTEM OR PORTION OF SUCH SYSTEM MUST UNDERGO A COMPLETE CIRCUIT CONTACT SELECTION (BREAKDOWN) & SERVICE (OPERATIONAL) TEST PRIOR TO BEING PLACED INTO SERVICE.

L&W INDS., INC.
SPRINGFIELD, MO

DATE	09/07/07
DESIGNED	ROLLO WATKINS
DRAWN:	ROLLO WATKINS
CHECKED	

CRAB ORCHARD & EGYPTION RAILROAD

RAIL-HIGHWAY GRADE CROSSING WARNING SYSTEM
BANDYVILLE ROAD (COUNTY ROAD 242)
HERRIN, ILLINOIS

DRAWN LMI	DATE 09/07/07		
CHECKED		SIZE C	REF. No. 294 884V
APPROVED		DWG NO. COE008	REV 0
		SHEET 1 OF 7	

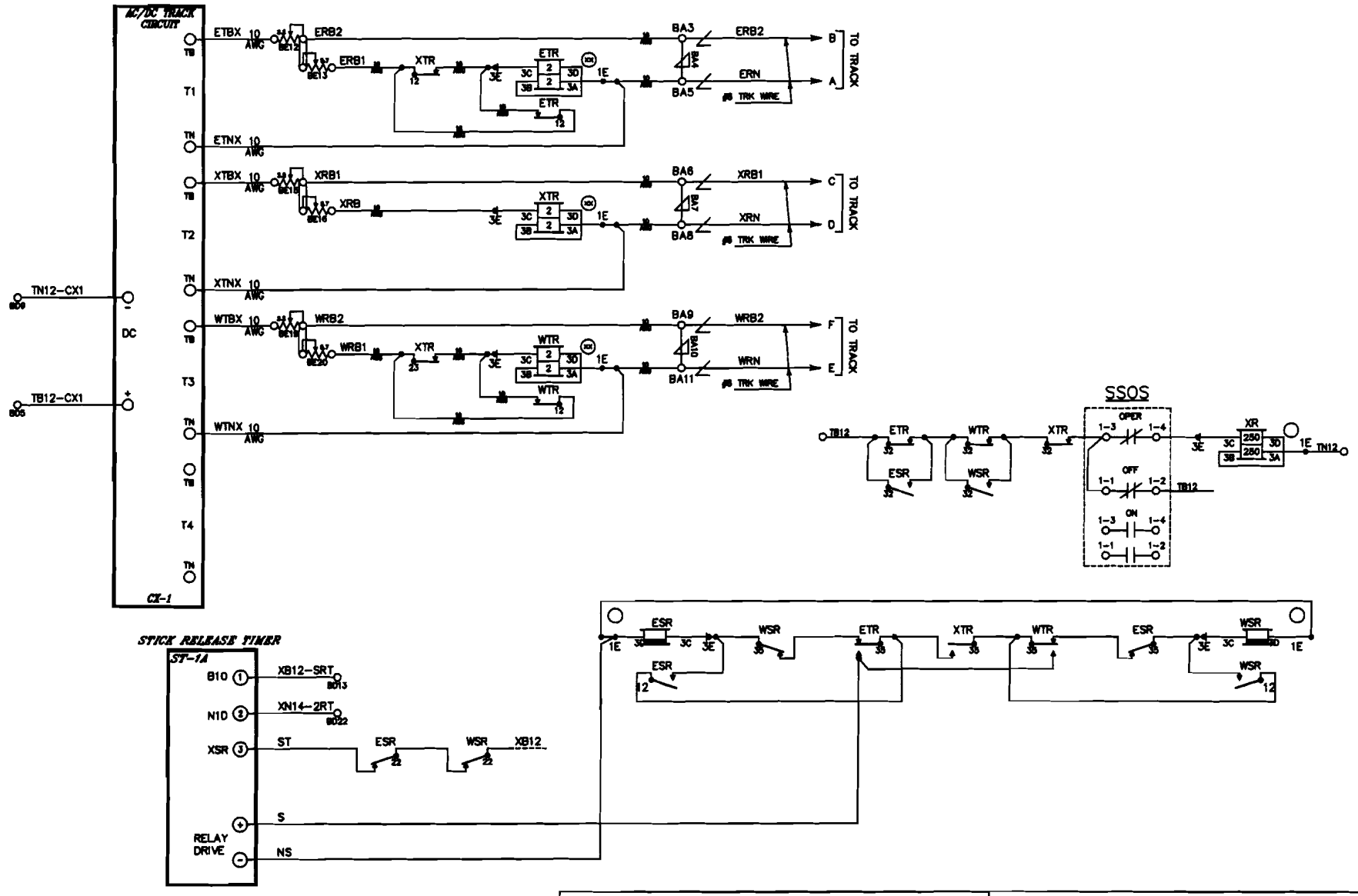

THE OPERATION OF THE CIRCUITS AND EQUIPMENT REPRESENTED CANNOT BE FINALLY CHECKED UNTIL CONNECTED TO FORM A COMPLETE SYSTEM OR PORTION OF SUCH SYSTEM. SUCH SYSTEM OR PORTION OF SUCH SYSTEM MUST UNDERGO A COMPLETE CIRCUIT CONTACT SELECTION (BREAKDOWN) & SERVICE (OPERATIONAL) TEST PRIOR TO BEING PLACED INTO SERVICE.

L&W INDS., INC.
SPRINGFIELD, MO

DATE	02/08/06
DESIGNED	ROLLO WATKINS
DRAWN:	ROLLO WATKINS
CHECKED	

CRAB ORCHARD & EGYPTION RAILROAD

RAIL-HIGHWAY GRADE CROSSSING WARNING SYSTEM
PENTACOST DRIVE
MARION, ILLINOIS

DRAWN LM | DATE
CHECKED
APPROVED

SIZE C | REF. No. 294- | DWG NO. COE006 | REV

SHEET 2 OF 7

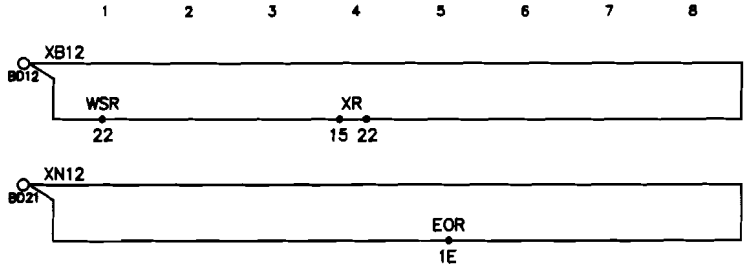

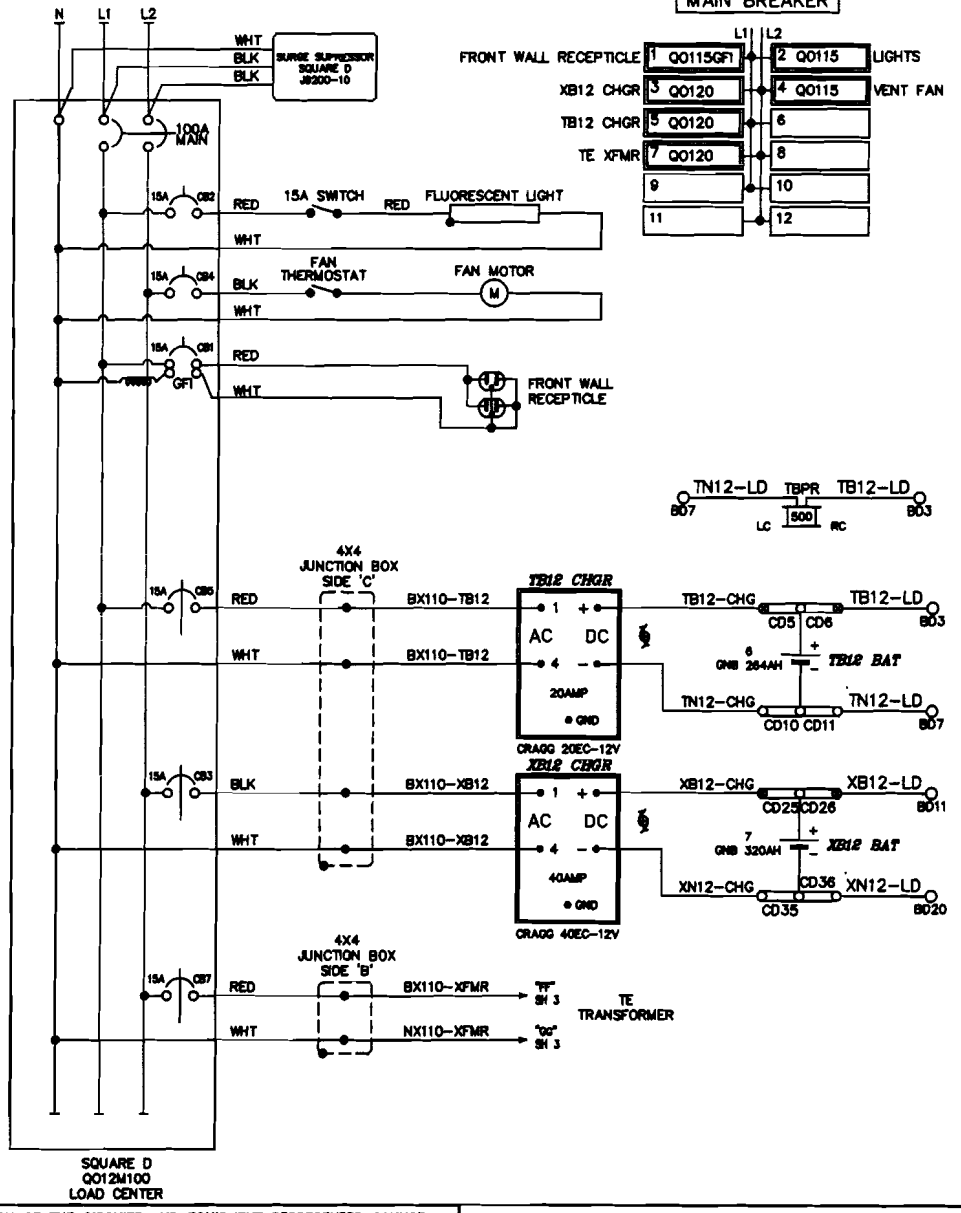

NOTES

1 - GROUND FAULT CIRCUIT-INTERUPTER (GFCI) MUST BE USED ON ALL CIRCUITS SERVING CONVENIENCE OUTLETS AND ANY EQUIPMENT OUTSIDE THE BUNGALOW.

2 - MINIMUM WIRE SIZE: 15 AMP - No. 14 AWG, THHN OR THWN SOLID.
20 AMP - No. 12 AWG, THHN OR THWN SOLID.
30 AMP - No. 10 AWG, THHN OR THWN SOLID.

3 - GENERAL COLOR CODE FOR ALL AC CIRCUITS, L1=RED, L2=BLACK, NEUTRAL=WHITE, SAFETY GROUND=GREEN.

THE OPERATION OF THE CIRCUITS AND EQUIPMENT REPRESENTED CANNOT BE FINALLY CHECKED UNTIL CONNECTED TO FORM A COMPLETE SYSTEM OR PORTION OF SUCH SYSTEM. SUCH SYSTEM OR PORTION OF SUCH SYSTEM MUST UNDERGO A COMPLETE CIRCUIT CONTACT SELECTION (BREAKDOWN) & SERVICE (OPERATIONAL) TEST PRIOR TO BEING PLACED INTO SERVICE.

L&W INDS., INC.
SPRINGFIELD, MO

DATE	07/20/07
DESIGNED	ROLLO WATKINS
DRAWN:	ROLLO WATKINS
CHECKED	

CRAB ORCHARD & EGYPTION RAILROAD

RAIL-HIGHWAY GRADE CROSSING WARNING SYSTEM
BANDYVILLE ROAD (COUNTY ROAD 242)
HERRIN, ILLINOIS

DRAWN LM DATE
CHECKED
APPROVED

SIZE C | REF. No. 294 884V | DWG NO. COE008 | REV

SHEET 3 OF 7

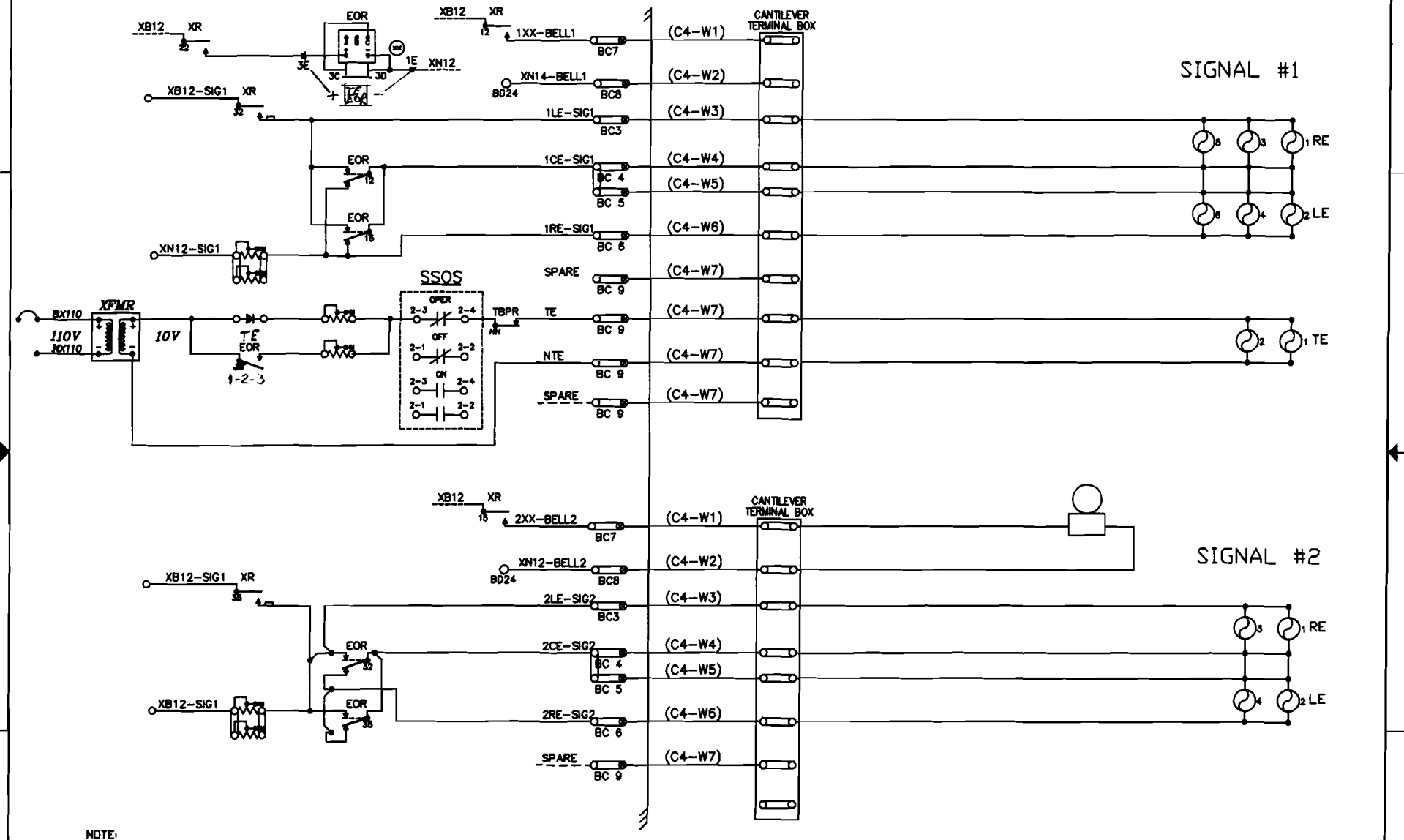

NOTE:
USE #10 AWG WIRE FOR LIGHT CIRCUITS

THE OPERATION OF THE CIRCUITS AND EQUIPMENT REPRESENTED CANNOT BE FINALLY CHECKED UNTIL CONNECTED TO FORM A COMPLETE SYSTEM OR PORTION OF SUCH SYSTEM. SUCH SYSTEM OR PORTION OF SUCH SYSTEM MUST UNDERGO A COMPLETE CIRCUIT CONTACT SELECTION (BREAKDOWN) & SERVICE (OPERATIONAL) TEST PRIOR TO BEING PLACED INTO SERVICE.

L&W INDS., INC.
SPRINGFIELD, MO

DATE	07/20/07
DESIGNED	ROLLO WATKINS
DRAWN:	ROLLO WATKINS
CHECKED	

CRAB ORCHARD & EGYPTION RAILROAD

RAIL-HIGHWAY GRADE CROSSING WARNING SYTEM
BANDYVILLE ROAD (COUNTY ROAD 242)
HERRIN, ILLINOIS

DRAWN LM | DATE | CHECKED | APPROVED

SIZE C | REF. No. 294 884V | DWG NO. COE008 | REV

SHEET 4 OF 7

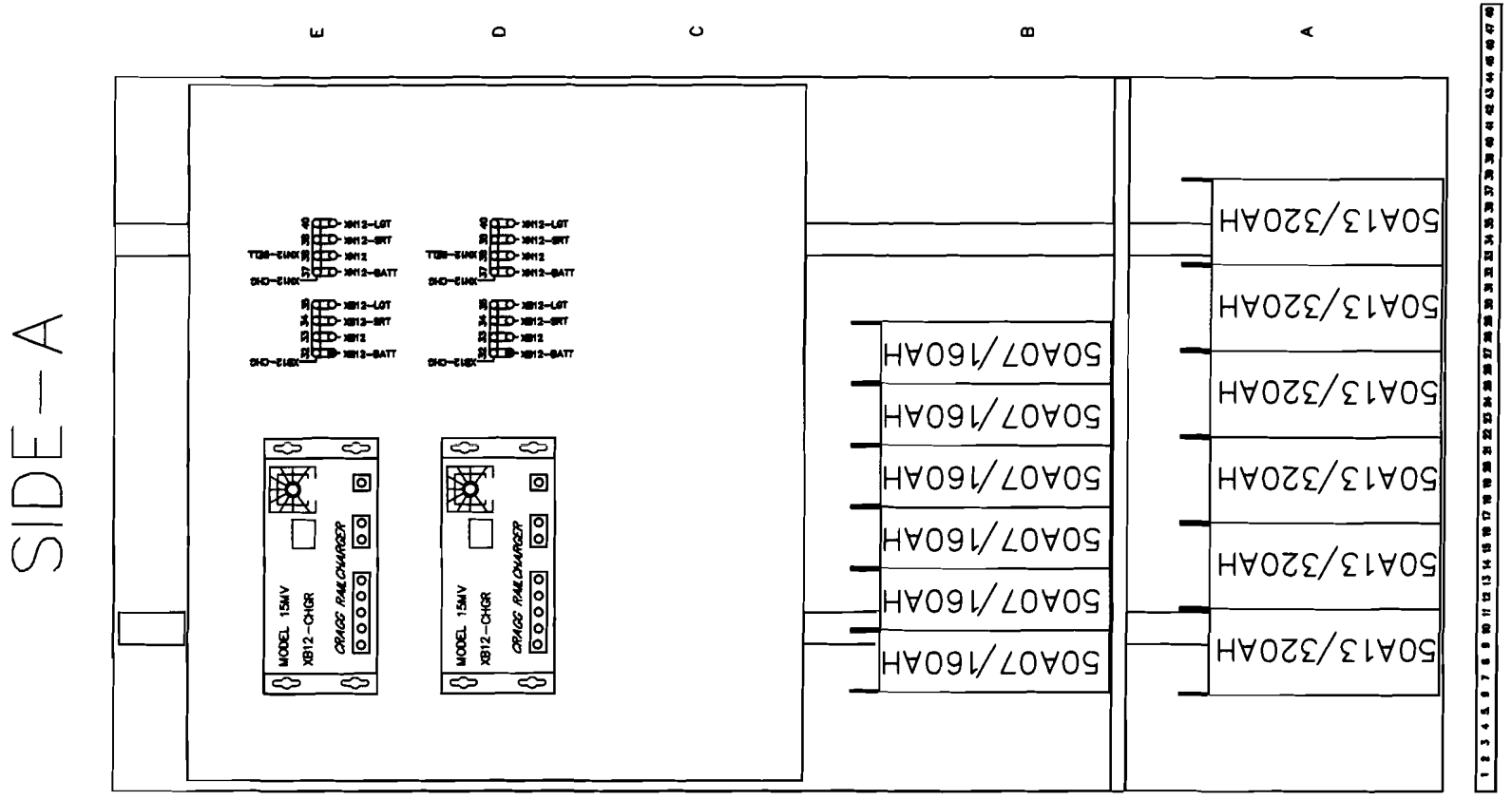

THE OPERATION OF THE CIRCUITS AND EQUIPMENT REPRESENTED CANNOT BE FINALLY CHECKED UNTIL CONNECTED TO FORM A COMPLETE SYSTEM OR PORTION OF SUCH SYSTEM. SUCH SYSTEM OR PORTION OF SUCH SYSTEM MUST UNDERGO A COMPLETE CIRCUIT CONTACT SELECTION (BREAKDOWN) & SERVICE (OPERATIONAL) TEST PRIOR TO BEING PLACED INTO SERVICE.

L&W INDS., INC.
SPRINGFIELD, MO

DATE	
DESIGNED	
DRAWN:	
CHECKED	

CRAB ORCHARD & EGYPTION RAILROAD

DRAWN	DATE				
CHECKED		SIZE	REF. No.	DWG NO.	REV
APPROVED					SHEET OF

SIDE-B

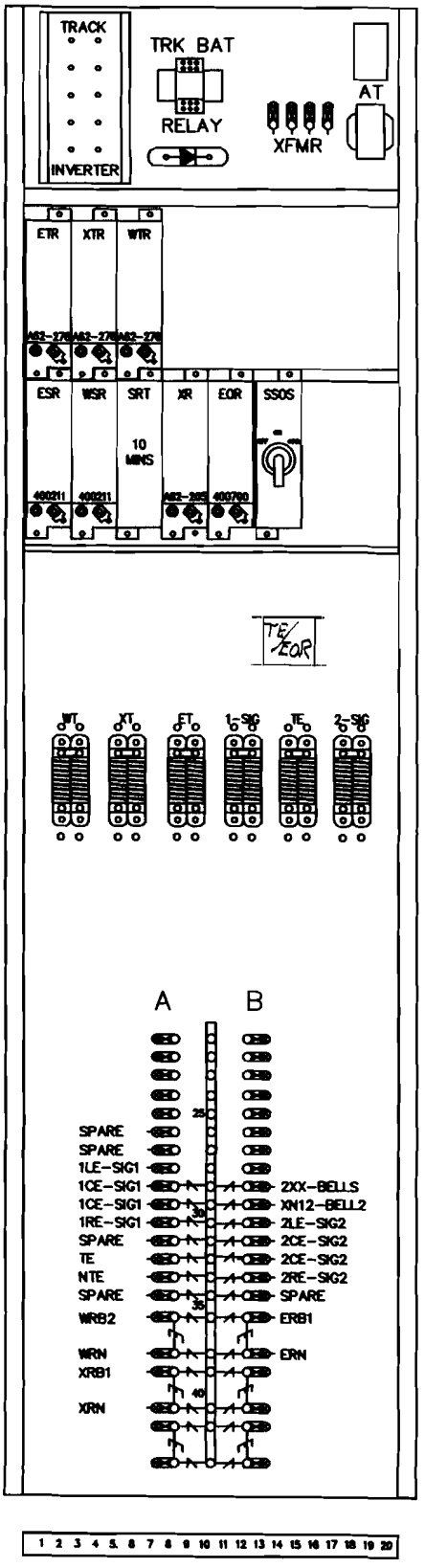

THE OPERATION OF THE CIRCUITS AND EQUIPMENT REPRESENTED CANNOT BE FINALLY CHECKED UNTIL CONNECTED TO FORM A COMPLETE SYSTEM OR PORTION OF SUCH SYSTEM. SUCH SYSTEM OR PORTION OF SUCH SYSTEM MUST UNDERGO A COMPLETE CIRCUIT CONTACT SELECTION (BREAKDOWN) & SERVICE (OPERATIONAL) TEST PRIOR TO BEING PLACED INTO SERVICE.

L&W INDS., INC.
SPRINGFIELD, MO

		DATE
DESIGNED	ROLLO WATKINS	07/20/07
DRAWN:	ROLLO WATKINS	
CHECKED		

DRAWN LWI
CHECKED
APPROVED
DATE

CRAB ORCHARD & EGYPTION RAILROAD

RAIL-HIGHWAY GRADE CROSSING WARNING SYSTEM
BANDYVILLE ROAD (COUNTY ROAD 242)
HERRIN, ILLINOIS

SIZE C | REF. NO. 294 68-AV | DWG NO. COE008 | REV

SHEET 6 OF 7

SIDE-C

E D C B A

1 2 3 4 5 6 7 8 9 10 11 12 13 14 15 16 17 18 19 20 21 22 23 24 25 26 27 28 29 30 31 32 33 34 35 36 37 38 39 40 41 42 43 44 45 46 47 48

THE OPERATION OF THE CIRCUITS AND EQUIPMENT REPRESENTED CANNOT BE FINALLY CHECKED UNTIL CONNECTED TO FORM A COMPLETE SYSTEM OR PORTION OF SUCH SYSTEM. SUCH SYSTEM OR PORTION OF SUCH SYSTEM MUST UNDERGO A COMPLETE CIRCUIT CONTACT SELECTION (BREAKDOWN) & SERVICE (OPERATIONAL) TEST PRIOR TO BEING PLACED INTO SERVICE.

L&W INDS., INC.
SPRINGFIELD, MO

DATE	
DESIGNED	
DRAWN:	
CHECKED	

CRAB ORCHARD & EGYPTION RAILROAD

DRAWN	DATE				
CHECKED		SIZE	REF. No.	DWG NO.	REV
APPROVED				SHEET	OF