W03 2676

DATE: 2000-09-22

ESTIMATE OF MATERIAL AND FORCE ACCOUNT WORK
BY THE
UNION PACIFIC RAILROAD

DESCRIPTION OF WORK:
INSTALL HIGHWAY CROSSING WARNING SYSTEM AND REMOTE GCP AT 1ST STREET IN ROCHELLE IL. MP. 75.42 ON THE GENEVA SUBDIVISION.
SIGNAL PROJECT MANAGER:R.L. JAMES
8433-5682

PID: 32872 AWO: 32676 MP,SUBDIV: 75.42, GENEVA
SERVICE UNIT: 02 CITY: 1ST ST STATE: IL

DESCRIPTION	QTY	UNIT	LABOR	MATERIAL	RECOLL	UPRR	TOTAL
ENGINEERING WORK							
NGINEERING			3737		3363	374	3737
ABOR ADDITIVE			5514		4963	551	5514
ECOLL-INSPE			2237		2013	224	2237
IG-HWY XNG			1478		1330	148	1478
TOTAL ENGINEERING			12966		11669	1297	12966
SIGNAL WORK							
ERMING				2400	2160	240	2400
ILL PREP			900		810	90	900
ONTRACT				13113	11801	1312	13113
QUIPMENT RENTAL				2500	2250	250	2500
OREIGN LINE FREIGHT				2622	2359	263	2622
ABOR ADDITIVE			24024		21622	2402	24024
ATL STORE EXPENSE				6556	5901	655	6556
ERSONAL EXPENSES				17005	15304	1701	17005
ALES TAX				8196	7376	820	8196
GNAL			32465	131136	147240	16361	163601
ANSPORTATION CHARGES				2400	2160	240	2400
AGE EQUIPMENT				5728	5155	573	5728
TOTAL SIGNAL			57389	191656	224138	24907	249045
TRACK & SURFACE WORK							
ELD WELD			95		86	9	95
BOR ADDITIVE			1949		1853	96	1949
TL STORE EXPENSE				188	169	19	188
4			1954	3258	4692	520	5212
ES TAX				151	135	16	151
G-HWY XNG			1500		1350	150	1500
D				525	473	52	525
TOTAL TRACK & SURFACE			5498	4122	8758	862	9620
LABOR/MATERIAL EXPENSE			75853	195778			
RECOLLECTIBLE/UPRR EXPENSE					244565	27066	
ESTIMATED PROJECT COST							271631
EXISTING REUSEABLE MATERIAL CREDIT					0		
SALVAGE NONUSEABLE MATERIAL CREDIT					0		
RECOLLECTIBLE LESS CREDITS							

ABOVE FIGURES ARE ESTIMATES ONLY AND SUBJECT TO FLUCTUATION. IN THE EVENT OF NCREASE OR DECREASE IN THE COST OR QUANTITY OF MATERIAL OR LABOR REQUIRED, WILL BILL FOR ACTUAL CONSTRUCTION COSTS AT THE CURRENT EFFECTIVE RATE.

WORK ORDER AUTHORIZATION-D. L OF ESTIMATED EXPENDITURES

EST START: 01-01-01
EST COMP: 12-31-01

RAILROAD: UPRR CO.
LOCATION: ROCHELLE IL 1ST ST GENEVA SUB
DEPARTMENT: ENGINEERING SERVICES

PROJ NO: 32872
A.W.O. NO: 32676
W.O. NO:
B.I. NO: 99EN10
STATE: IL
VAL SEC: 1103A

STOCK MATERIAL PLAN

ITEM NUMBER	ITEM DESCRIPTION	UNIT COST	QTY	UM	DIRECT MATL $
)2040420	BATTERY,GNB,75A9 OR 50A13	181.43	24	EA	4354
)2040660	BATTERY,GNB, 75A23 OR 50A27	321.22	7	EA	2249
)9011240	CABLE TIE, NYLON 1 1/8" MAX. DIA	0.06	400	EA	24
)9011980	CABLE TIE, NYLON 3 1/2" MAX. DIA	0.22	40	EA	9
)9014950	CIRCUIT BREAKER, 120/240V 20A AC	23.16	2	EA	46
)9042860	POWER OFF LIGHT ASSY.	29.25	1	EA	29
9054300	RELAY,TAB 869 KRP11DN12V. SW.HTR.	10.68	1	EA	11
9054360	RELAY, GEN.PURPOSE 120V. TAB 856	11.18	2	EA	22
9057650	SOCKET,P-B 27E122 TAB 836A & 856	2.68	3	EA	8
9065700	TAPE, ELECTRICAL PLASTIC	2.41	4	RL	10
9066900	TERMINAL,SPADE,10-12 WIRE,#8 STUD	0.34	30	EA	10
9137100	TERM.LUG 3/16 CABLE-1/4 POST 2412	0.83	100	EA	83
9215100	33466 TERMINAL, RING TONGUE AMP	0.23	48	EA	11
)261570	321527-1 TERMINAL, TEST	1.11	20	EA	22
)401140	ADAPTER, 4 INCH CARLON PLASTIC	2.25	4	EA	9
)409820	BUSHING, 4" PLASTIC,INSULATING	0.75	4	EA	3
)412460	CONDUIT,3/8 INCH FLEX STEEL SEALT	0.44	2	LF	1
)424920	CONDUIT, 4", PVC, TYPE 40	1.34	40	LF	54
)433970	CONNECTOR,3/8 INCH STRAIGHT BOX S	0.96	4	EA	4
)467930	LOCKNUT, 4 INCH, GALVANIZED	4.09	4	EA	16
)615550	LAMP,INCANDESCENT,10V.25W.	5.20	8	EA	42
)844170	GROUND ROD, 5/8 INCH X 8 FEET	5.75	18	EA	104
)846750	GRND.ROD CONN. 4WAY ONESHOT.	4.93	18	EA	89
908640	WIRE,#6 AWG.1 COND.COPPER,SOLID	0.11	450	LF	50
912200	WIRE #6 AWG 2 CND 500'ROLL SHIELD	1.23	506	LF	622
913200	WIRE,#6, 5 COND 500'ROLL SHIELDED	2.01	250	LF	503
915610	WIRE #6 AWG 1 COND COPPER, STRAN	0.37	300	LF	111
930550	WIRE #10 AWG 1 COND COPPER, STRAN	0.14	1500	LF	210
)932310	WIRE #10 AWG 1 COND COPPER, TWIST	0.32	340	LF	109
)946070	WIRE #14,7 COND 1000'ROLL SHIELDE	1.07	5250	LF	5618
)960090	WIRE #16 AWG 1 COND COPPER, STRAN	0.08	500	LF	40
)160230	TOGGLE,SPRING WING 3/8	0.48	3	EA	1
)52450	SHEET METAL SCREW,#12 X 3/4"	2.00	4	BX	8
)53150	SHEET METAL SCREW #12 X 1"	2.96	2	BX	6
)61400	PADLOCK,SIGNAL,WITHOUT KEY,AMERIC	12.02	12	EA	144
33210	CARTON, 39 1/8"L X 23 1/4"W X 17	3.30	2	EA	7
33230	CARTON, 47 3/8"L X 39 1/2"W X 18"	7.07	2	EA	14
41880	PALLET, 48 X 40 INCH 2/WAY	7.95	4	EA	32
40010	PLASTER OF PARIS, DENTAL GRADE	0.81	50	LB	41
00710	SIGN, -2 TRACKS- MP STD PAGE 403.	18.40	2	EA	37
)40220	SIGN, HIGHWAY CROSSING	50.00	4	EA	200
)59480	SIGN MOUNTING KIT 5"	123.00	2	EA	246

WORK ORDER AUTHORIZATION-D :L OF ESTIMATED EXPENDITURES

EST S...T: 01-01-01
EST COMP: 12-31-01

RAILROAD: UPRR CO.
LOCATION: ROCHELLE IL 1ST ST GENEVA SUB
DEPARTMENT: ENGINEERING SERVICES

PROJ NO: 32872
A.W.O. NO: 32676
W.O. NO:
B.I. NO: 99EN10
STATE: IL
VAL SEC: 1103A

2000920	SURGE PROTECTOR SP19-2A TAB 586	68.53	3 EA	206
2001370	SURGE PROTECTOR SP20-2A TAB 585	70.12	2 EA	140
2016830	WIRE DUCT, 2X3	9.00	30 EA	270
2016940	WIRE DUCT, 3X3	10.33	2 EA	21
2017510	WIRE DUCT COVER 2"X6'	2.11	30 EA	63
2017620	WIRE DUCT COVER 3"X6'	2.98	2 EA	6
2019530	ENCLOSURE,SHUNT,POLE MOUNTED.24X2	245.01	6 EA	1470
2019560	EQUALIZER, H.D. TAB 583	9.22	26 EA	240
2019630	FILTER/COUPLER,100 HZ,FC-100 TAB	334.04	2 EA	668
2021550	FOUNDATION,4',STEEL,FOR FLSHR/GAT	227.96	2 EA	456
2025090	GROUNDING PLATE -	61.92	1 EA	62
2025240	HOUSE, 6X6, SIGNAL XING	4305.14	1 EA	4305
2025920	HOUSE, SIGNAL 6 X 8 X 9 FEET HIG	4999.88	1 EA	5000
2027350	CLIP BOARD - FOR SIGNAL PRINTS	6.45	2 EA	13
02743.	STEP BOX	12.70	2 EA	25
028420	LIGHTNING ARRESTOR,CLR-COMM TAB 3	7.01	42 EA	294
029780	LIGHTNING ARR,HD TAB 582 W/O BASE	9.91	15 EA	149
030010	LIGHTNING ARRESTOR CONN.STRIP	4.15	4 EA	17
039210	RECTIFIER,20EC,12v.TAB575	349.59	3 EA	1049
039390	RECTIFIER, 40EC, 12V. TAB577	501.71	1 EA	502
040400	RESISTOR, ADJ.0.63 OHM TAB91	24.86	4 EA	99
040460	RESISTER, ADJ. 5 OHM, TAB 90	12.76	5 EA	64
042650	POST, MOUNTING, FOR SHUNT HOUSING	8.91	12 EA	107
045700	SURGE SUPPRESSOR, PRIMARY,#2377-4	9.56	2 EA	19
069100	TERMINAL, #6 WIRE - RING TYPE	0.85	8 EA	7
070010	TERMINAL,#12-10 WIRE,RING TONGUE	0.08	450 EA	36
71600	TERMINAL,#20-16 WIRE,RING TONGUE	0.06	300 EA	18
72280	TERMINAL BLOCK, SIGNAL 2 POST BAK	2.25	86 EA	194
72510	TERMINAL BLOCK,SIGNAL 3 POST TEST	6.29	3 EA	19
72740	TERMINAL BLOCK, SIGNAL 12 POST 6	8.60	8 EA	69
74550	TEST LINK, INSULATED ASSEMBLY TAB	0.67	48 EA	32
74680	TRACK CIRCUIT,ELECTRO LOCK 4 BRAA	4876.52	1 EA	4877
74700	TRK.CIRCUIT,RPTR.100 HZ. "RRNNQ"	4074.84	3 EA	12225
74860	TRK CIRCUIT, INT. 100 HZ. "AHTQ"	5530.90	2 EA	11062
79550	WIRE TAG, PLASTIC - WHITE	0.12	200 EA	24
79560	MARKING PEN(FOR WHITE TAG)	1.94	2 EA	4
2250	CRTU. W/MICROBURST TRANSCEIVER.	1655.00	1 EA	1655
8120	LED FL/GATE ASSY.2 WAY LIGHTS	7215.99	2 EA	14432
9370	GATE ARM, ADJ.16-32'	235.74	2 EA	471
2140	HIGH WIND BRACKET 5"OR 4"	63.99	2 EA	128
6470	SHEAR PIN, SK-1000-1	5.50	2 EA	11
9800	SIG GENERATOR,ACG-2T,TAB 636 STYL	135.11	1 EA	135
0650	SIGNAL TRACK DRIVER TAB 637	222.46	1 EA	222
1500	RECTIFIER. RING 10, TAB 634 STYLE	42.25	1 EA	42
5400	DETECTOR, LIGHT OUT, LOD-1	469.18	1 EA	469
5800	GCP111 NO ISLAND #81KB-80110-0B00	15157.96	2 EA	30316
040	DUMMY LOAD, 2800 FT. TAB 644	40.00	2 EA	80
000	IPI MODULE-GCP3000D2 #80211	1078.02	4 EA	4312

WORK ORDER AUTHORIZATION-DE OF ESTIMATED EXPENDITURES

ST START: 01-01-01
ST COMP: 12-31-01

AILROAD: UPRR CO.
OCATION: ROCHELLE IL 1ST ST GENEVA SUB
EPARTMENT: ENGINEERING SERVICES

PROJ NO: 32872
A.W.O. NO: 32676
W.O. NO:
B.I. NO: 99EN10
STATE: IL
VAL SEC: 1103A

2246000	RESISTOR,47,000 (47K) OHM .5 WATT	0.20	4	EA	1
2258590	NBS, TAB 641, 62775-1543	394.01	4	EA	1576
2258850	NBS, TAB 642, 62775-3497	324.01	2	EA	648
2263600	SURGE ARRESTOR,METER LOOP.	23.89	2	EA	48
2263690	SURGE PANEL - TAB 619	135.99	3	EA	408
2264040	SURGE PANEL - TAB 618	203.97	3	EA	612
2267000	TRANSCEIVER MODULE-#80012-GCP	1560.00	4	EA	6240
2276050	CROSSING ANALYZER, HCA-1	1711.22	1	EA	1711
2278800	DAX MODULE #80016-GCP 3000D2	1085.00	2	EA	2170
707280	RELAY,B1BN,TK.TAB 882 A62-120	537.99	1	EA	538
726820	RELAY, FLASHER TAB 887	343.90	1	EA	344
728800	RELAY, B1LC. TAB 911 A62-310	298.91	1	EA	299
745830	RELAY,NEUTRAL, B1 TAB 884 & 884A	235.02	2	EA	470
752390	RELAY,B1SR. 3 SEC. TAB 893	425.99	1	EA	426
773760	RELAY BRACKET, HOLDS 14 [illegible]1 RELAYS	219.21	1	EA	219
776370	RELAY PLUGBOARD,GRS B1,TAB 900	33.20	6	EA	199
777970	FLAG TERMINAL, FOR GRS, 14-10	0.89	100	EA	89
778110	FLAG TERMINAL, FOR GRS, 20-16	1.01	100	EA	101
779280	RELAY TEST TERM,GRS B1 TAB770&864	6.[illegible]0	6	EA	41
842220	DIODE JEDEC NUMBER 1N4004	0.03	1	EA	0
959000	POWER TAP MATERIAL	2000.00	1	EA	2000
511490	EXTRACTOR FOR "B"TERMINALS P3-308	9.89	1	EA	10
511510	TEST NUT WRENCH. GRS #P3-320	16.59	2	EA	33
548010	INSULATING CAP & SHIELD ASSY.	2.07	20	EA	41
903460	EPD 120/240TDFL SURGE PROTECTOR	341.02	1	EA	341
954500	180429-000 BOOTLEG KIT	85.39	15	EA	1281
16480	RAIL ANCHOR 6" BASE HD CHANNELOC	0.89	960	EA	854
55300	FIELD WELD KIT, 136# ONE SHOT	60.74	8	EA	486
64570	PACKING SAND, PRE-MIXED (PER SACK	22.54	1	CA	36
64930	REFRACTORY PASTE	1.83	2	EA	4
22140	136# INS JT PLUG HH LH ANGCUT 15-	598.97	2	EA	1198
22170	136# INS JT PLUG HH RH ANGCUT 15-	603.30	2	EA	1207
	TOTAL				134,925

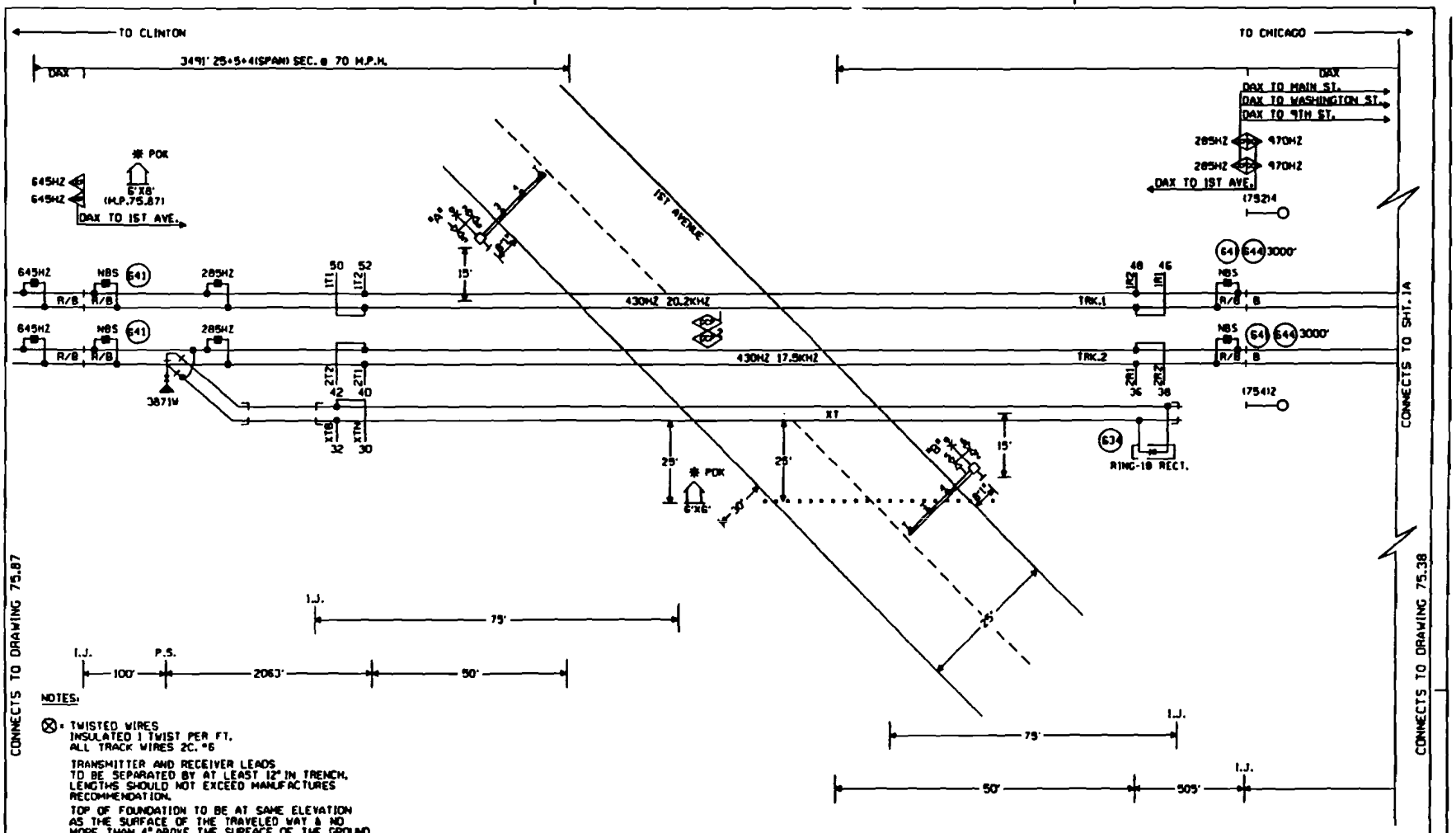

Exhibit B-4, page 5

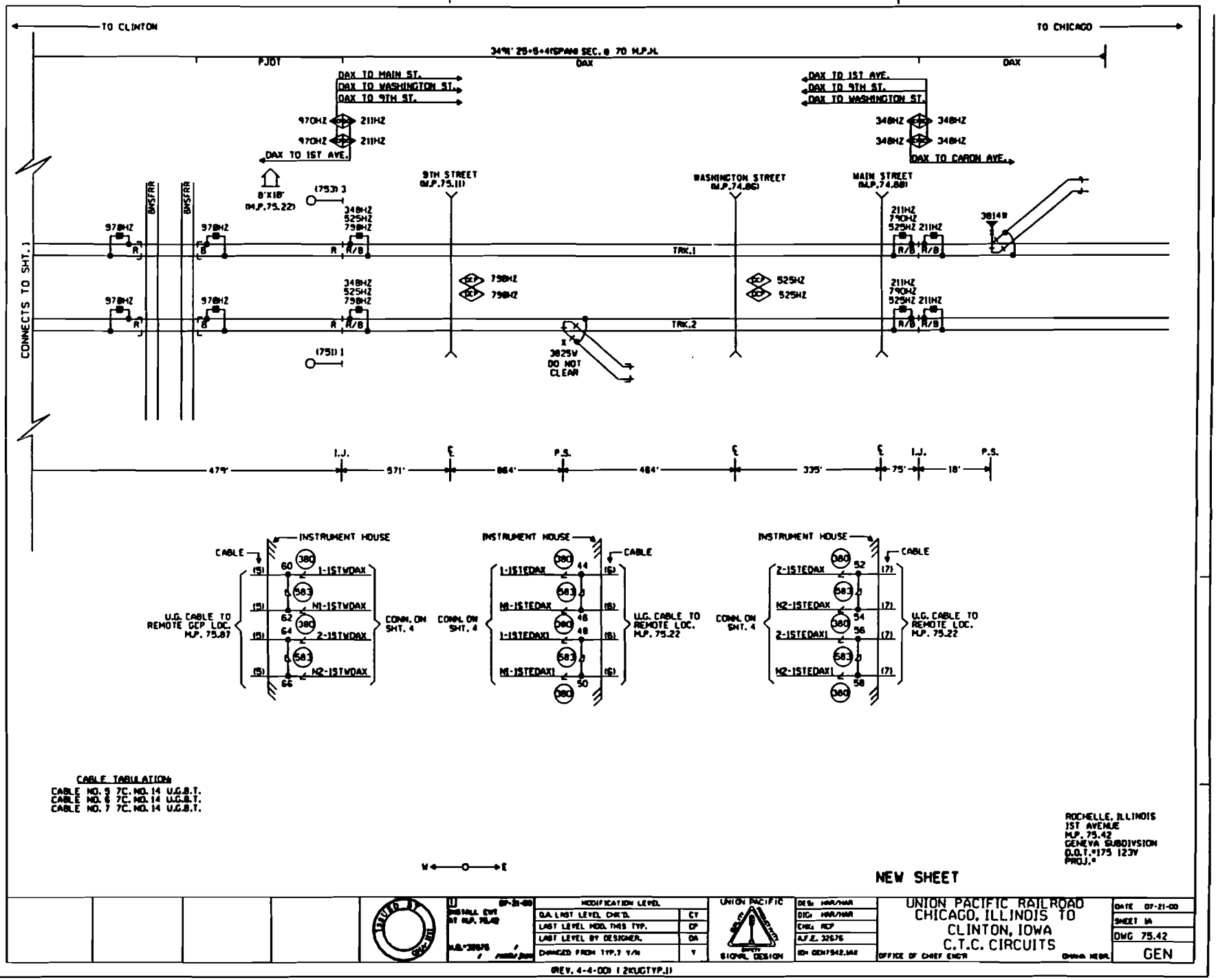

CABLE TABULATION
CABLE NO. 5 7C. NO. 14 U.G.B.T.
CABLE NO. 6 7C. NO. 14 U.G.B.T.
CABLE NO. 7 7C. NO. 14 U.G.B.T.

ROCHELLE, ILLINOIS
1ST AVENUE
M.P. 75.42
GENEVA SUBDIVISION
O.D.T.#175 123W
PROJ.#

NEW SHEET

MODIFICATION LEVEL	
G.A. LAST LEVEL CHK'D.	CY
LAST LEVEL MOD. THIS TYP.	CP
LAST LEVEL BY DESIGNER.	DA
CHANGED FROM TYP.? Y/N	Y

UNION PACIFIC SIGNAL DESIGN

DES: HAR/HAR
DIG: HAR/HAR
CHK: RCP
A.F.E. 32676

UNION PACIFIC RAILROAD
CHICAGO, ILLINOIS TO
CLINTON, IOWA
C.T.C. CIRCUITS
OFFICE OF CHIEF ENG'R

DATE 07-21-00
SHEET 1A
DWG 75.42
GEN

(REV. 4-4-00 I 2KUCTYP.I)

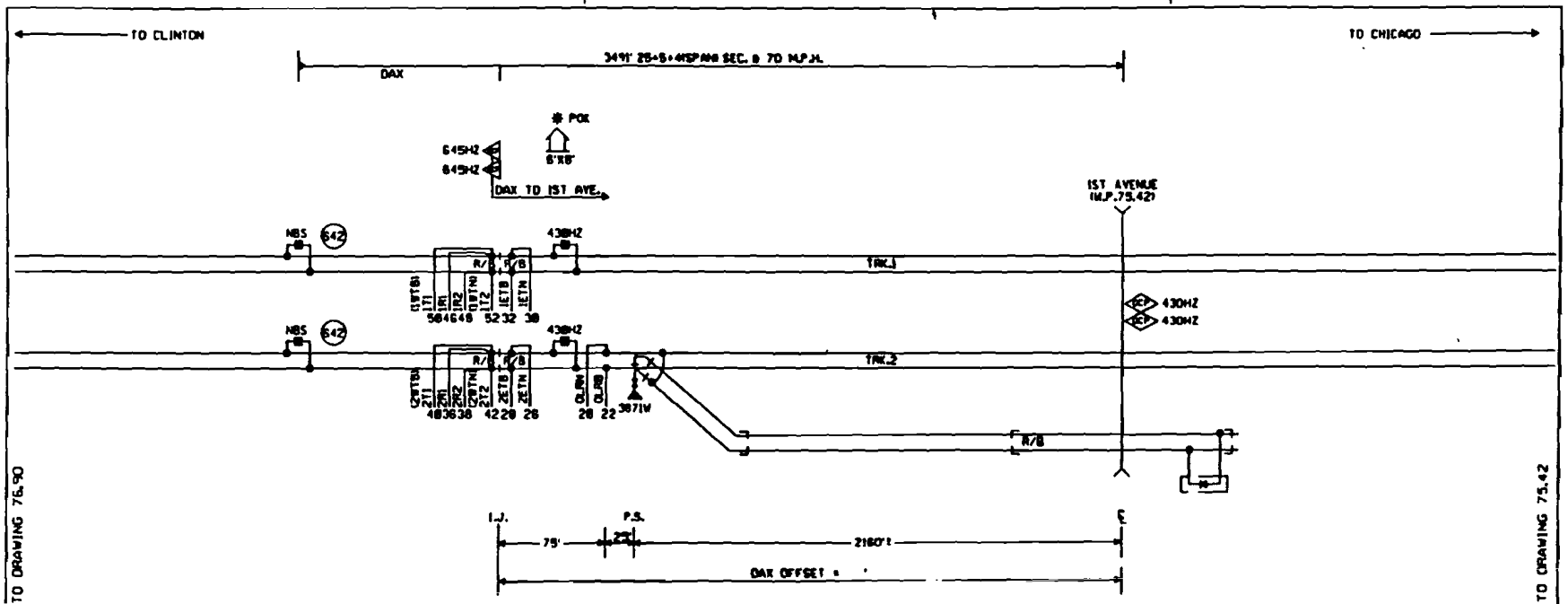

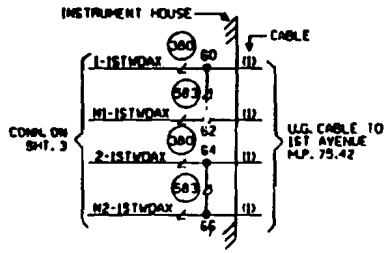

NOTES:

⊗ - TWISTED WIRES
ALL TRACK WIRES 2C. #6
INSULATED 1 TWIST PER FT.

TRANSMITTER AND RECEIVER LEADS TO BE SEPARATED BY AT LEAST 12" IN TRENCH. LENGTHS SHOULD NOT EXCEED MANUFACTURES RECOMMENDATION.

ALL BUNGALOW WIRING TO BE #16 AWG FLEX UNLESS OTHERWISE SPECIFIED EXCEPT ALL GROUND WIRE TO BE #6 AWG FLEX OR LARGER.

REFER TO UP STANDARD DWG. FOR BUNGALOW GROUNDING.

CONSTRUCTION NOTES:

1. TAB 642 NBS'S ARE NEW. ALL OTHERS ARE EXISTING.
2. INSTALL NEW METER SERVICE.
3. INSTALL THIS REMOTE HOUSE IN CONJUNCTION WITH 1ST AVENUE (WO#32676).
4. INSTALL ONE ELECTROCODE REGENERATIVE REPEATER (RRNNO) ON TRACK 1 AND ONE EL-4 UNIT (LCNO) ON TRACK 2 FOR LOCK 3871W IN THIS REMOTE CCP HOUSE.
5. INSTALL TWO NEW ELECTROCODE 4+ UNITS (AHTO) AT INTERMEDIATE SIGNAL LOCATION, M.P. 77.63, AND (TWO ELECTROCODE 4H+ UNITS (ABGO) AT "RX" INTERLOCKING AS PART OF THIS PROJECT.)

ROCHELLE, ILLINOIS
REMOTE CCP LOCATION
M.P. 75.87
GENEVA SUBDIVISION
O.D.T.#175 123V
PROJ.#

W ←—O—→ E

CABLE TABULATION:
CABLE NO. 1 7C. NO. 14 U.G.B.T.

NEW SHEET

						1	08-10-00 INSTALL REP 3000 61 M.P. 75.87	MODIFICATION LEVEL		UNION PACIFIC	DES. HAR/HAR
								QA. LAST LEVEL CHK'D.	CY		DIG. HAR/HAR
								LAST LEVEL MOD. THIS TYP.	CY		CHK. RCF
								LAST LEVEL BY DESIGNER.	DA		A.F.E. 32676
								CHANGED FROM TYP. 1 T/R	T	SIGNAL DESIGN	ID# CEN7987.IX

UNION PACIFIC RAILROAD
CHICAGO, ILLINOIS TO
CLINTON, IOWA
C.T.C. CIRCUITS
OFFICE OF CHIEF ENG'R — OMAHA NEBR.

DATE 08-10-00
SHEET 1
DWG 75.87
GEN

(REV. 4-4-88 (REMOTE.))

W032677

DATE: 2000-09-20

ESTIMATE OF MATERIAL AND FORCE ACCOUNT WORK
BY THE
UNION PACIFIC RAILROAD

DESCRIPTION OF WORK:
INSTALL HIGHWAY CROSSING WARNING SYSTEM. CARON ROAD. ROCHELLE, ILLINOIS.
MP. 74.23 GENEVA SUB
SIGNAL PROJECT MANAGER:H.L. MARTIN
8271-4692
MP. 74.04 INSTALL ELECTROLOCK IN A NEW 6X6 HOUSE

PID: 32870 AWO: 32677 MP,SUBDIV: 74.23, GENEVA
SERVICE UNIT: 02 CITY: CARON ROAD STATE: IL

DESCRIPTION	QTY	UNIT	LABOR	MATERIAL	RECOLL	UPRR	TOTAL
ENGINEERING WORK							
ENGINEERING			3850		3465	385	3850
LABOR ADDITIVE			5598		5038	560	5598
RECOLL-INSPE			2237		2013	224	2237
SIG-HWY XNG			1478		1330	148	1478
TOTAL ENGINEERING			13163		11846	1317	13163
SIGNAL WORK							
BILL PREP			900		810	90	900
CONTRACT				13423	12080	1343	13423
EQUIPMENT RENTAL				2500	2250	250	2500
FOREIGN LINE FREIGHT				2684	2415	269	2684
LABOR ADDITIVE			26100		23490	2610	26100
MATL STORE EXPENSE				6711	6040	671	6711
PERSONAL EXPENSES				18905	17014	1891	18905
ROCK/DIRT				2500	2250	250	2500
SALES TAX				8389	7550	839	8389
SIGNAL			35270	134234	152554	16950	169504
TRANSPORTATION CHARGES				2400	2160	240	2400
USAGE EQUIPMENT				6368	5731	637	6368
TOTAL SIGNAL			62270	198114	234344	26040	260384
TRACK & SURFACE WORK							
FIELD WELD			95		86	9	95
LABOR ADDITIVE			2405		2330	75	2405
MATL STORE EXPENSE				182	163	19	182
OTM			3099	3261	5724	636	6360
SALES TAX				145	131	14	145
SIG-HWY XNG (SIGNAL RETIREMENT)			1500		1350	150	1500
WELD				392	352	40	392
TOTAL TRACK & SURFACE			7099	3980	10136	943	11079
LABOR/MATERIAL EXPENSE			82532	202094			
RECOLLECTIBLE/UPRR EXPENSE					256326	28300	
ESTIMATED PROJECT COST							284626
EXISTING REUSEABLE MATERIAL CREDIT					0		
SALVAGE NONUSEABLE MATERIAL CREDIT					0		
RECOLLECTIBLE LESS CREDITS							

E ABOVE FIGURES ARE ESTIMATES ONLY AND SUBJECT TO FLUCTUATION. IN THE EVENT OF INCREASE OR DECREASE IN THE COST OR QUANTITY OF MATERIAL OR LABOR REQUIRED, RR WILL BILL FOR ACTUAL CONSTRUCTION COSTS AT THE CURRENT EFFECTIVE RATE.

WORK ORDER AUTHORIZATION-DE . OF ESTIMATED EXPENDITURES

EST START: 01-01-01
EST COMP: 12-31-01

PROJ NO: 32870
A.W.O. NO: 32677
W.O. NO:
B.I. NO: 99EN10
STATE: IL
VAL SEC: 1103A

RAILROAD: UPRR CO.
LOCATION: ROCHELLE IL CARON ROAD GENEVA SUB
DEPARTMENT: ENGINEERING SERVICES

STOCK MATERIAL PLAN

ITEM NUMBER	ITEM DESCRIPTION	UNIT COST	QTY	UM	DIRECT MATL $
2040360	BATTERY, GNB, 45A9 OR 50A07	116.60	6	EA	700
2040420	BATTERY,GNB,75A9 OR 50A13	181.43	12	EA	2177
2040660	BATTERY,GNB, 75A23 OR 50A27	321.22	7	EA	2249
9011030	CABLE TIE, NYLON 5/8" MAX. DIA.	0.04	100	EA	4
9011240	CABLE TIE, NYLON 1 1/8" MAX. DIA	0.06	300	EA	18
9011980	CABLE TIE, NYLON 3 1/2" MAX. DIA	0.22	20	EA	4
014950	CIRCUIT BREAKER, 120/240V 20A AC	23.13	1	EA	23
042860	POWER CTF LIGHT ASSY.	29.25	1	EA	29
054300	RELAY,TAB 869 KRP11DN12V. SW.HTR.	10.68	1	EA	11
054360	RELAY, GEN.PURPOSE 120V. TAB 856	11.29	1	EA	11
057650	SOCKET,P-B 27E122 TAB 836A & 856	2.68	2	EA	5
065700	TAPE, ELECTRICAL PLASTIC	2.41	2	RL	5
066900	TERMINAL,SPADE,10-12 WIRE,#8 STUD	0.34	26	EA	9
137100	TERM.LUG 3/16 CABLE-1/4 POST 2412	0.83	90	EA	75
215100	33466 TERMINAL, RING TONGUE AMP	0.23	34	EA	8
261570	321527-1 TERMINAL, TEST	1.11	22	EA	24
401140	ADAPTER, 4 INCH CARLON PLASTIC	2.25	3	EA	7
409820	BUSHING, 4" PLASTIC,INSULATING	0.75	3	EA	2
612460	CONDUIT,3/8 INCH FLEX STEEL SEALT	0.44	1	LF	0
624920	CONDUIT, 4", PVC, TYPE 40	1.34	30	LF	40
633970	CONNECTOR,3/8 INCH STRAIGHT BOX S	0.96	2	EA	2
667930	LOCKNUT, 4 INCH, GALVANIZED	4.09	3	EA	12
15550	LAMP,INCANDESCENT,10V.25W.	5.20	7	EA	36
44170	GROUND ROD, 5/8 INCH X 8 FEET	5.64	17	EA	96
46750	GRND.ROD CONN. 4WAY ONESHOT.	4.93	17	EA	84
08640	WIRE,#6 AWG.1 COND.COPPER,SOLID	0.11	425	LF	47
12350	WIRE #6 AWG 2 COND 1000 LF.SHIELD	1.19	3500	LF	4165
13200	WIRE,#6, 5 COND 500'ROLL SHIELDED	2.01	350	LF	704
15610	WIRE #6 AWG 1 COND COPPER, STRAN	0.37	200	LF	74
30550	WIRE #10 AWG 1 COND COPPER, STRAN	0.14	1500	LF	210
32310	WIRE #10 AWG 1 COND COPPER, TWIST	0.32	370	LF	118
46070	WIRE #14,7 COND 1000'ROLL SHIELDE	1.07	1250	LF	1338
50090	WIRE #16 AWG 1 COND COPPER, STRAN	0.11	500	LF	55
50230	TOGGLE,SPRING WING 3/8	0.48	3	EA	1
52450	SHEET METAL SCREW,#12 X 3/4"	2.00	4	BX	8
53150	SHEET METAL SCREW #12 X 1"	2.96	1	BX	3
1400	PADLOCK,SIGNAL,WITHOUT KEY,AMERIC	12.02	11	EA	132
3210	CARTON, 39 1/8"L X 23 1/4"W X 17	3.30	1	EA	3
3230	CARTON, 47 3/8"L X 39 1/2"W X 18"	7.07	1	EA	7
1880	PALLET, 48 X 40 INCH 2/WAY	7.98	2	EA	16
0010	PLASTER OF PARIS, DENTAL GRADE	0.81	50	LB	41
0710	SIGN, -2 TRACKS- MP STD PAGE 403.	18.40	2	EA	37

WORK ORDER AUTHORIZATION-DET OF ESTIMATED EXPENDITURES

ST START: 01-01-01
ST COMP: 12-31-01

PROJ NO: 32870
A.W.O. NO: 32677
W.O. NO:
B.I. NO: 99EN10
STATE: IL
VAL SEC: 1103A

AILROAD: UPRR CO.
OCATION: ROCHELLE IL CARON ROAD GENEVA SUB
EPARTMENT: ENGINEERING SERVICES

9340220	SIGN, HIGHWAY CROSSING	50.00	2	EA	100
9369480	SIGN MOUNTING KIT 5"	123.00	2	EA	246
1242290	PVC CEMENT. 1 PT.	2.75	1	EA	3
2000920	SURGE PROTECTOR SP19-2A TAB 586	68.53	2	EA	137
2001370	SURGE PROTECTOR SP20-2A TAB 585	70.12	2	EA	140
2016830	WIRE DUCT, 2X3	9.00	22	EA	198
2016940	WIRE DUCT, 3X3	10.33	2	EA	21
2017510	WIRE DUCT COVER 2"X6'	2.11	22	EA	46
2017620	WIRE DUCT COVER 3"X6'	2.98	4	EA	12
2019530	ENCLOSURE,SHUNT,POLE MOUNTED.24X2	245.01	5	EA	1225
2019560	EQUALIZER, H.D. TAB 583	9.22	11	EA	101
2019600	EXTERNAL ANALOG MODULE. FOR CRTU.	90.00	1	EA	90
2021550	FOUNDATION,4',STEEL,FOR FLSHR/GAT	227.96	2	EA	456
2025090	GROUNDING PLATE -	61.92	1	EA	62
2025240	HOUSE, 6X6, SIGNAL XING	4305.14	1	EA	4305
2025920	HOUSE, SIGNAL 6 X 8 X 9 FEET HIG	4999.88	1	EA	5000
2027350	CLIP BOARD - FOR SIGNAL PRINTS	6.42	2	EA	13
2027430	STEP BOX	12.64	1	EA	13
2028420	LIGHTNING ARRESTOR,CLR-COMM TAB 3	7.01	24	EA	168
2029780	LIGHTNING ARR,HD TAB 582 W/O BASE	9.91	20	EA	198
2030010	LIGHTNING ARRESTOR CONN.STRIP	4.15	3	EA	12
2036280	PLATE ACCESS,CEILING PTMW#20374	20.70	1	EA	21
039210	RECTIFIER,20EC,12V.TAB575	349.59	3	EA	1049
039390	RECTIFIER, 40EC, 12V. TAB577	501.71	1	EA	502
040400	RESISTOR, ADJ.0.63 OHM TAB91	24.86	4	EA	99
040460	RESISTER, ADJ. 5 OHM, TAB 90	12.76	1	EA	13
042650	POST, MOUNTING, FOR SHUNT HOUSING	8.91	10	EA	89
045700	SURGE SUPPRESSOR, PRIMARY,#2377-4	9.61	1	EA	10
069100	TERMINAL, #6 WIRE - RING TYPE	0.85	8	EA	7
070010	TERMINAL,#12-10 WIRE,RING TONGUE	0.08	550	EA	44
071600	TERMINAL,#20-16 WIRE,RING TONGUE	0.06	400	EA	24
072280	TERMINAL BLOCK, SIGNAL 2 POST BAK	2.25	63	EA	142
072510	TERMINAL BLOCK,SIGNAL 3 POST TEST	6.29	3	EA	19
072740	TERMINAL BLOCK, SIGNAL 12 POST 6	8.60	4	EA	34
074550	TEST LINK, INSULATED ASSEMBLY TAB	0.67	34	EA	23
074680	TRACK CIRCUIT,ELECTRO LOCK 4 BRAA	4876.52	2	EA	9753
074970	CAB SIGNAL GENERATOR, 100 HZ CAB	1450.00	2	EA	2900
079550	WIRE TAG, PLASTIC - WHITE	0.12	200	EA	24
079560	MARKING PEN(FOR WHITE TAG)	1.94	2	EA	4
080750	TRK CIR, EC4H+,"AGE" UP CAB. TAB	5922.93	3	EA	17769
92250	CRTU. W/MICROBURST TRANSCEIVER.	1655.00	1	EA	1655
08120	LED FL/GATE ASSY.2 WAY LIGHTS	7215.99	2	EA	14432
09370	GATE ARM, ADJ.16-32'	235.74	2	EA	471
22140	HIGH WIND BRACKET 5"OR 4"	63.99	2	EA	128
36470	SHEAR PIN, SK-1000-1	5.50	2	EA	11
03400	DETECTOR, LIGHT OUT, LOD-1	469.18	1	EA	469
04290	DUMMY LOAD, 2200 FT. TAB 644	40.00	1	EA	40
05800	GCP111 NO ISLAND #81KB-80110-0B00	15157.96	2	EA	30316

WORK ORDER AUTHORIZATION-DE OF ESTIMATED EXPENDITURES

EST START: 01-01-01
EST COMP: 12-31-01

PROJ NO: 32870
A.W.O. NO: 32677
W.O. NO:
B.I. NO: 99EN10
STATE: IL
VAL SEC: 1103A

RAILROAD: UPRR CO.
LOCATION: ROCHELLE IL CARON ROAD GENEVA SUB
DEPARTMENT: ENGINEERING SERVICES

2231750	COUPLER,BI.DIR.62664-211HZ TAB627	689.00	1	EA	689
2232000	COUPLER,BI.DIR.62664-285HZ TAB627	681.04	1	EA	681
2240000	IPI MODULE-GCP3000D2 #80211	1078.02	4	EA	4312
2246000	RESISTOR,47,000 (47K) OHM .5 WATT	0.20	4	EA	1
2258590	NBS, TAB 641, 62775-1543	394.01	5	EA	1970
2262050	SIM.TRK.BURIAL ASSY 80074 TAB605	70.00	1	EA	70
2263600	SURGE ARRESTOR,METER LOOP.	23.89	2	EA	48
2263690	SURGE PANEL - TAB 619	135.99	2	EA	272
2264040	SURGE PANEL - TAB 618	203.97	2	EA	408
2264600	TRACK FILTER - TF 211	214.99	3	EA	645
2267000	TRANSCEIVER MODULE-#80012-GCP	1560.00	4	EA	6240
2276050	CROSSING ANALYZER, HCA-1	1711.30	1	EA	1711
2278800	DAX MODULE #80016-GCP 3000D2	1085.00	4	EA	4340
2726820	RELAY, FLASHER TAB 887	344.95	1	EA	345
2728800	RELAY, B1LC. TAB 911 A62-310	298.89	1	EA	299
2745830	RELAY,NEUTRAL, B1 TAB 884 & 884A	235.02	4	EA	940
2752390	RELAY,B1SR. 3 SEC. TAB 893	425.99	1	EA	426
773760	RELAY BRACKET, HOLDS 14 B1 RELAYS	219.21	1	EA	219
773800	RELAY BRACKET.HOLDS 2 B1 RELAYS.	83.46	1	EA	83
776370	RELAY PLUGBOARD,GRS B1,TAB 900	33.20	7	EA	232
777970	FLAG TERMINAL, FOR GRS, 14-10	0.89	120	EA	107
778110	FLAG TERMINAL, FOR GRS, 20-16	1.01	120	EA	121
779280	RELAY TEST TERM,GRS B1 TAB7708864	6.90	7	EA	48
842220	DIODE JEDEC NUMBER 1N4004	0.03	1	EA	0
959200	POWER TAP MATERIAL & LABOR	3000.00	1	EA	3000
511490	EXTRACTOR FOR "B"TERMINALS P3-308	9.89	1	EA	10
511510	TEST NUT WRENCH. GRS #P3-320	16.59	1	EA	17
48010	INSULATING CAP & SHIELD ASSY.	2.07	10	EA	21
03460	EPD 120/240TDFL SURGE PROTECTOR	343.78	1	EA	344
54500	180429-000 BOOTLEG KIT	85.39	17	EA	1452
16480	RAIL ANCHOR 6" BASE HD CHANNELOC	0.89	960	EA	854
66010	FIELD WELD KIT, 136# PREM. ORGOTH	49.00	8	EA	392
22140	136# INS JT PLUG HH LH ANGCUT 15-	599.58	2	EA	1199
22170	136# INS JT PLUG HH RH ANGCUT 15-	603.82	2	EA	1208
	TOTAL				137,888

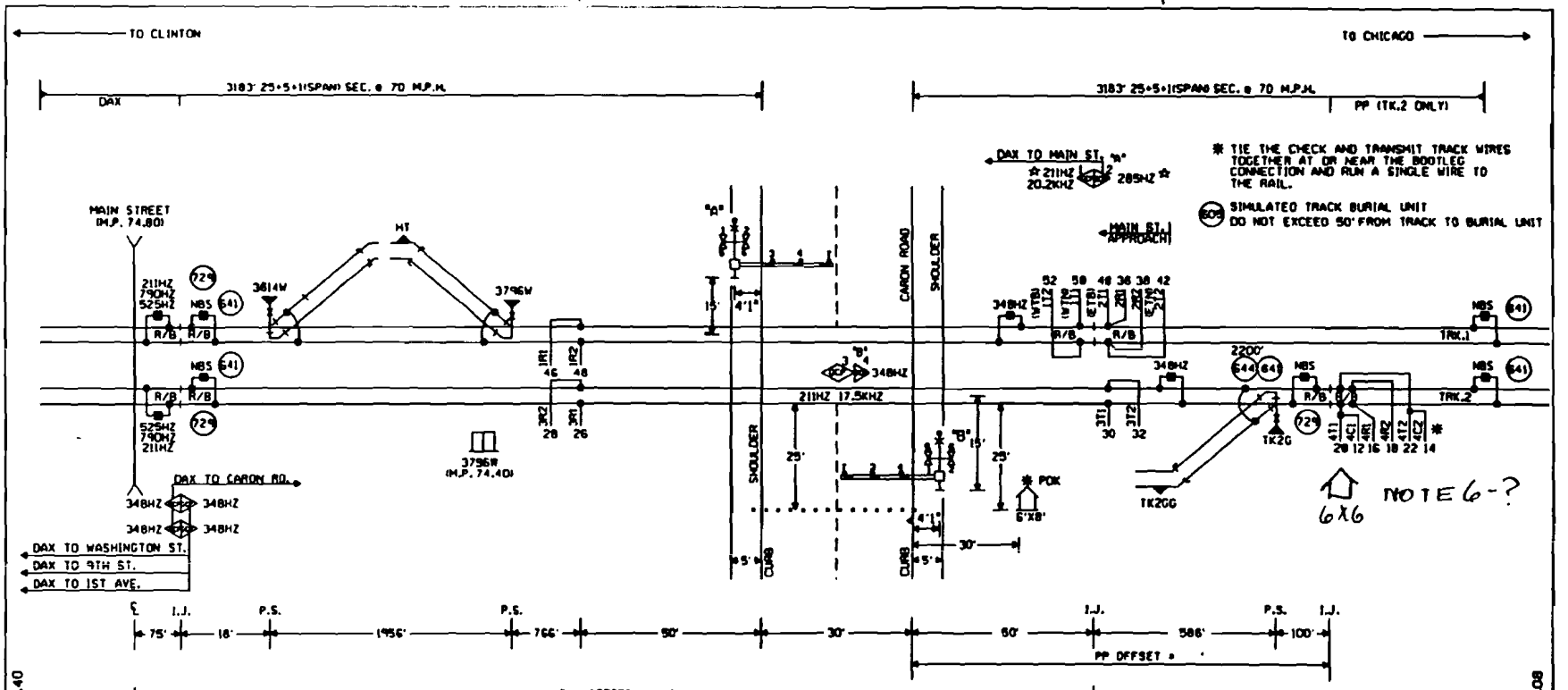

NOTES:

⊗ = TWISTED WIRES INSULATED 1 TWIST PER FT. ALL TRACK WIRES 2C. #6

TRANSMITTER AND RECEIVER LEADS TO BE SEPARATED BY AT LEAST 12" IN TRENCH. LENGTHS SHOULD NOT EXCEED MANUFACTURES RECOMMENDATION.

TOP OF FOUNDATION TO BE AT SAME ELEVATION AS THE SURFACE OF THE TRAVELED WAY & NO MORE THAN 4" ABOVE THE SURFACE OF THE GROUND.

ALL BUNGALOW WIRING TO BE #16 AWG FLEX UNLESS OTHERWISE SPECIFIED EXCEPT ALL GROUND WIRE TO BE #6 AWG FLEX OR LARGER.

ALL WIRING IN GATE MECHANISM TO BE #10 AWG FLEX".

REFER TO UP STANDARD DWG FOR BUNGALOW GROUNDING.

DO NOT USE 7 CELLS OF 812 BATTERY UNLESS REQUIRED TO MAINTAIN MINIMUM LAMP VOLTAGE.

ALL LIGHTS TO BE 12" ROUNDELS.

. . . . . 4"X 40' CONDUIT

LIGHTS: A & B LED LIGHTS

GATE A: 19'

GATE B: 19'

☆ GCP TO OPERATE IN SIMULATED BI-DIRECTIONAL MODE. USE TAB 627 COUPLER.

This is a crossing house with a [illegible]

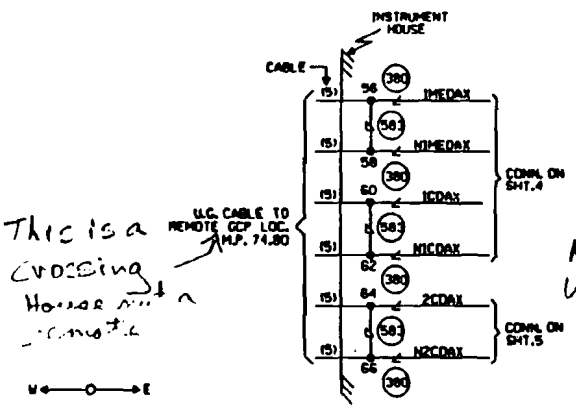

NOT ON this 6x0

CONSTRUCTION NOTES:

1. TAB 641 NBS'S AND TAB 644 OTL'S ARE NEW, ALL OTHERS ARE EXISTING.
2. INSTALL NEW METER SERVICE.
3. CONSTRUCT RETAINING WALL TO ACCOMODATE NEW HOUSE.
4. REMOVE ALL IJ'S BETWEEN 'RX', M.P. 73.30, AND MAIN STREET, M.P. 74.80.
5. INSTALL ONE EL-4 UNIT (LCND) AND A NEW CUT SECTION ON EAST SIDE OF CROSSING, TRACK 1 ONLY, FOR LOCK 3796 IN THIS CROSSING HOUSE. REUSE HIGH DOUBLE CASE AT LOCK 3796 FOR EPIC-2 RELEASE CIRCUIT AT LOCK. RUN ONE 2C#8 AND ONE 7C#14 FROM THIS CROSSING TO HE CASE.
6. INSTALL ONE EL-4 UNIT (LCND) AND A NEW CUT SECTION, TRACK 2 ONLY, FOR LOCK 'TK2G' IN A NEW 6'X6' HOUSE AT M.P. 74.04 AS PART OF THIS CROSSING PROJECT.
7. INSTALL TWO EC-4H+ UNITS (ABGD) AT 'NX' INTERLOCKING AND ONE EC-4H+ UNIT (ABGD) AT 'RX' CONTROL POINT AS PART OF THIS PROJECT.
8. UPGRADE MAIN STREET (WO#32673) WITH GCP3000'S AND PROVIDE DAX CIRCUITS TO THIS CROSSING AS PART OF THIS PROJECT.

CABLE TABULATION:
CABLE NO. 5 7C. NO. 14 U.G.B.T.

NEW SHEET

ROCHELLE, ILLINOIS
CARON ROAD
M.P. 74.23
GENEVA SUBDIVISION
D.O.T.#176 3961
PROJ.#

						07-21-00 INSTALL EVT AND E.E. AT M.P. 74.23 TO 74.08 W.O.#32673	MODIFICATION LEVEL		UNION PACIFIC SIGNAL DESIGN	DES: HAR/HAR	UNION PACIFIC RAILROAD CHICAGO, ILLINOIS TO CLINTON, IOWA C.T.C. CIRCUITS	DATE 07-21-00	
							D.A. LAST LEVEL CHK'D.	CY		DWG: HAR/HAR		SHEET 1	
							LAST LEVEL MOD. THIS TYP.	CP		CHK: RCP		DWG 74.23	
							LAST LEVEL BY DESIGNER.	DA		A.F.E. 32677		GEN	
							CHANGED FROM TYP.7 T/M	T		ID# GEN7423.1H	OFFICE OF CHIEF ENGR.		

REV. 4-4-00 (2KUGTYP.1)

Exhibit B-5, page 5