Typ: 043007 Ch: Y

PLAN MUST NOT BE MODIFIED WITHOUT APPROVAL OF SIGNAL ENGINEERING

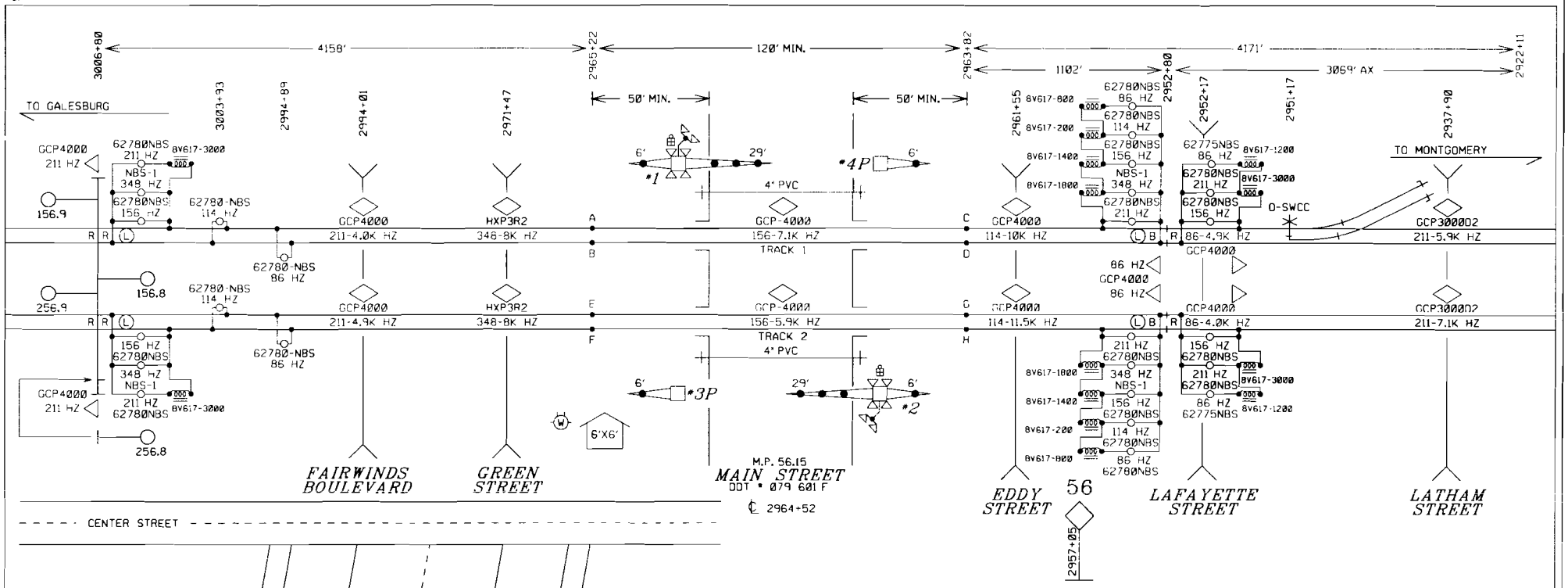

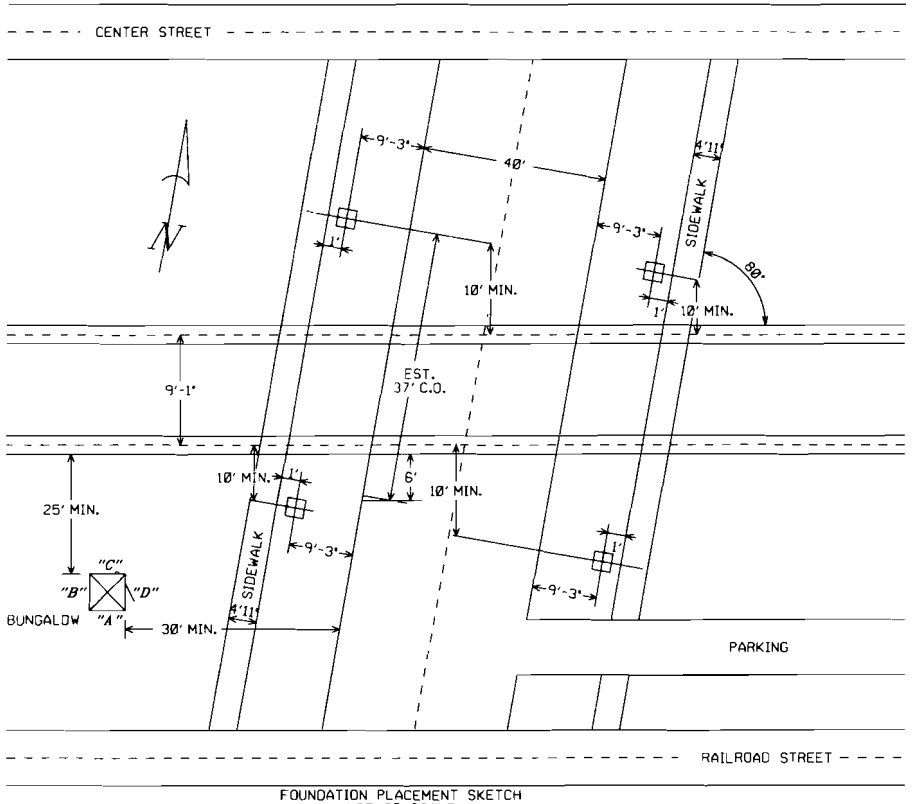

FOUNDATION PLACEMENT SKETCH
NOT TO SCALE

NOTES:

EQUIPMENT IS DESIGNED FOR 20 SECONDS MINIMUM WARNING TIME AT 79 MPH.
APPROACHES WERE LENGTHENED 1 SECOND(S) FOR WIDE OR ANGLED CROSSING (CT).
APPROACHES WERE LENGTHENED 10 SECONDS FOR SPEED VARIANCE AND BALLAST CHANGES (BT).
APPROACHES WERE LENGTHENED 5 SECONDS FOR EQUIPMENT RESPONSE TIME (ERT).
ALL LAMPS TO BE LED
GATE LENGTH SHOWN IS MEASURED FROM MAST C/L TO GATE TIP

NOTES:

-TEST TERMINAL
-EQUALIZER
-LINE ARRESTER
-HEAVY DUTY ARRESTER
-TWISTED WIRE 2 TURNS PER FOOT
-CONNECTION TO REC./RTU

ALL WIRES #16 AWG UNLESS OTHERWISE NOTED

ALL NEW

DESIGNED 11-28-07
INSTALL NEW CROSSING
RSD/BES SEQ.# 33612

BURLINGTON NORTHERN SANTA FE RAILWAY

CROSSING CIRCUIT PLAN
MAIN STREET SANDWICH, IL

LS 0001 | MP 56.15 | SH 01 OF 12

0001056_15x01c_.dgn NOVEMBER 28, 2007

PLAN MUST NOT BE MODIFIED WITHOUT APPROVAL OF SIGNAL ENGINEERING

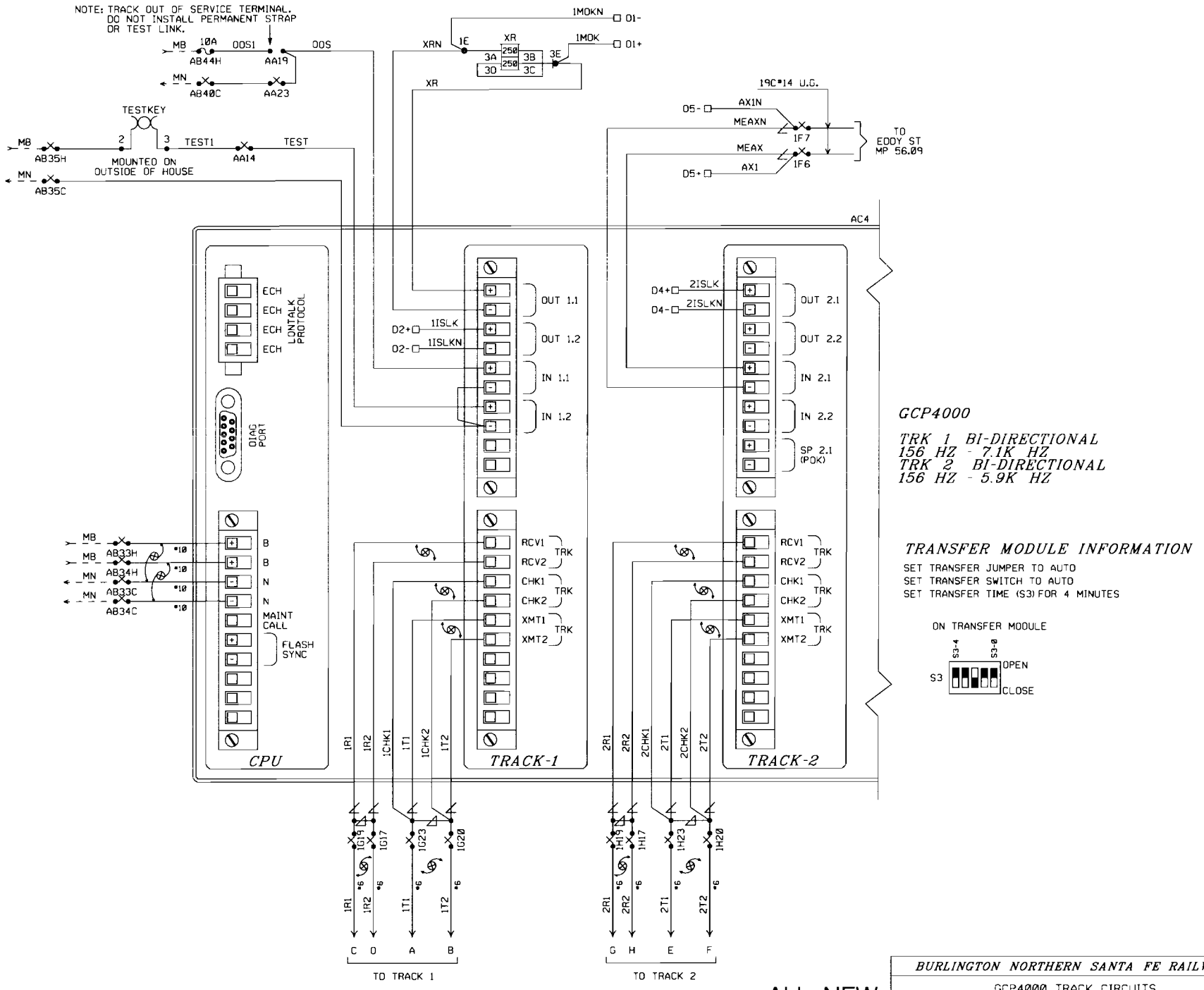

ALL NEW

							DESIGNED 11-28-07 INSTALL NEW CROSSING RSD/BES SEQ.# 33612	LS 0001	MP 56.15	SH 02 OF 12

BURLINGTON NORTHERN SANTA FE RAILWAY

GCP4000 TRACK CIRCUITS
MAIN STREET SANDWICH, IL

PLAN MUST NOT BE MODIFIED WITHOUT APPROVAL OF SIGNAL ENGINEERING

GCP4000 PROGRAMMING

Minimum Program Steps Report

Location and SIN

DOT Number: 079601F
Milepost Number: 56.15
Site Name: MAIN STREET

SIN: 702200000016 •

• Parameter is part of office check number calculation.

MCF and Template Selection

MCF Name: GCP-T6X-01-2.mcf
MCF Revision: 012
MCFCRC: 0DFE7A0C

Template = 1A:6 Trk Bi •

• Parameter is part of office check number calculation.

Minimum Program Steps

TEMPLATE: module configuration
Track 2/RIO 1 Slot = Track •
SSCC 1 Slot = Not Used •
SSCC 2 Slot = Not Used •
SEAR Used = No •

TEMPLATE: track 1-Bi, Island
Track 1 : GCP Frequency = 156 Hz
Track 1 : Approach Distance = 4158 ft See Plans
Track 1 : Prime Warning Time = 31 sec •
Track 1 : GCP Transmit Level = Medium Set in Field
Track 1 : Isl Frequency = 7.1 kHz

TEMPLATE: track 2-Bi, Island
Track 2 : GCP Frequency = 156 Hz
Track 2 : Approach Distance = 4158 ft See Plans
Track 2 : Prime Warning Time = 31 sec •
Track 2 : GCP Transmit Level = Medium Set in Field
Track 2 : Isl Frequency = 5.9 kHz

TEMPLATE: AND 1 XR
AND 1 Enable Used = Yes •

TEMPLATE: OP assignment 1
OUT 1.1 = AND 1 XR •
OUT 1.2 = T1 Island •
OUT 2.1 = T2 Island •

TEMPLATE: IP assignment 1
IN 1.1 = Out Of Service IP 1 •
IN 1.2 = AND 1 XR Enable •
IN 2.1 = AND 1 XR Enable •

GCP: track 1
Track 1 : Island Distance = 140 ft •

GCP: track 2
Track 2 : Island Distance = 140 ft •

ADVANCED: out of service
OOS Control = Display+OOS IPs •

ADVANCED: out of service 2
T2 OOS Control = OOS Input 1 •

• Parameter is part of office check number calculation.

Check Numbers

Office Check Number: 06180C79
Config. Check Number: 11F908C4
(Based on MCF Revision 012)

Parameters not part of office check number calculation:

Track 1 : GCP Frequency = 156 Hz
Track 1 : Approach Distance = 4158 ft See Plans
Track 1 : GCP Transmit Level = Medium Set in Field
Track 1 : Isl Frequency = 7.1 kHz
Track 2 : GCP Frequency = 156 Hz
Track 2 : Approach Distance = 4158 ft See Plans
Track 2 : GCP Transmit Level = Medium Set in Field
Track 2 : Isl Frequency = 5.9 kHz

Comments

<none>

Configuration Package File

Filename: 0001056 15x00c .pac
Path: H:\projects\32266\MP 56.15 MAIN ST\
Date/Time: 1/07/2008 14:10:14

ALL NEW

BURLINGTON NORTHERN SANTA FE RAILWAY

GCP4000 PROGRAMMING
MAIN STREET SANDWICH, IL

DESIGNED 11-28-07
INSTALL NEW CROSSING
RSO/BES SEQ.# 33612

LS 0001 | MP 56.15 | SH 03 OF 12

PLAN MUST NOT BE MODIFIED WITHOUT APPROVAL OF SIGNAL ENGINEERING

PROGRAM BNSF4

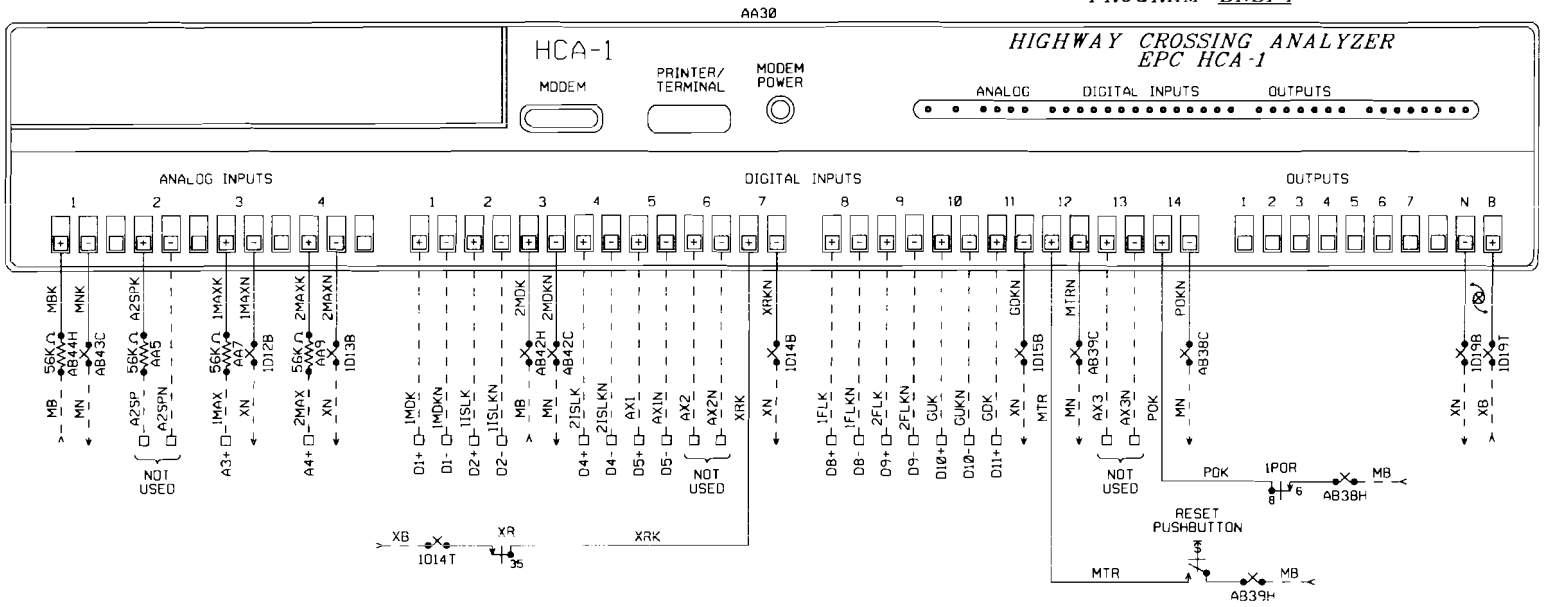

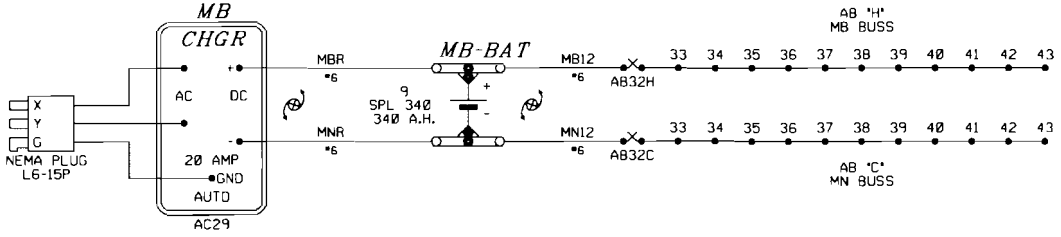

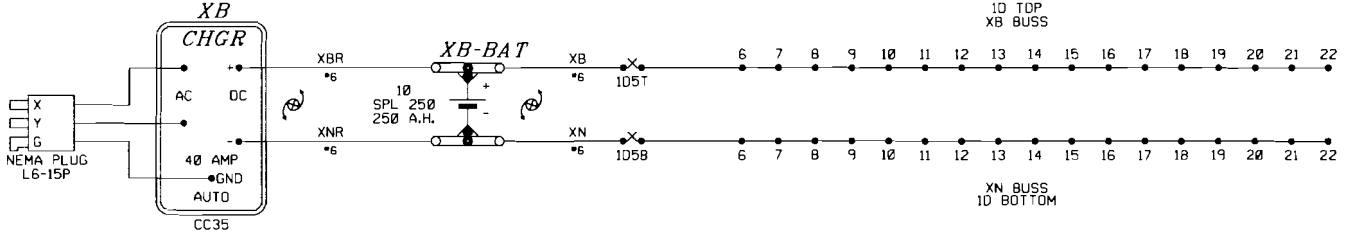

ALL NEW

BURLINGTON NORTHERN SANTA FE RAILWAY

RECORDER AND BATTERY CIRCUITS
MAIN STREET SANDWICH, IL

DESIGNED 11-28-07
INSTALL NEW CROSSING
RSD/BES SEQ.# 33612

LS 0001 | MP 56.15 | SH 04 OF 12

PLAN MUST NOT BE MODIFIED WITHOUT APPROVAL OF SIGNAL ENGINEERING

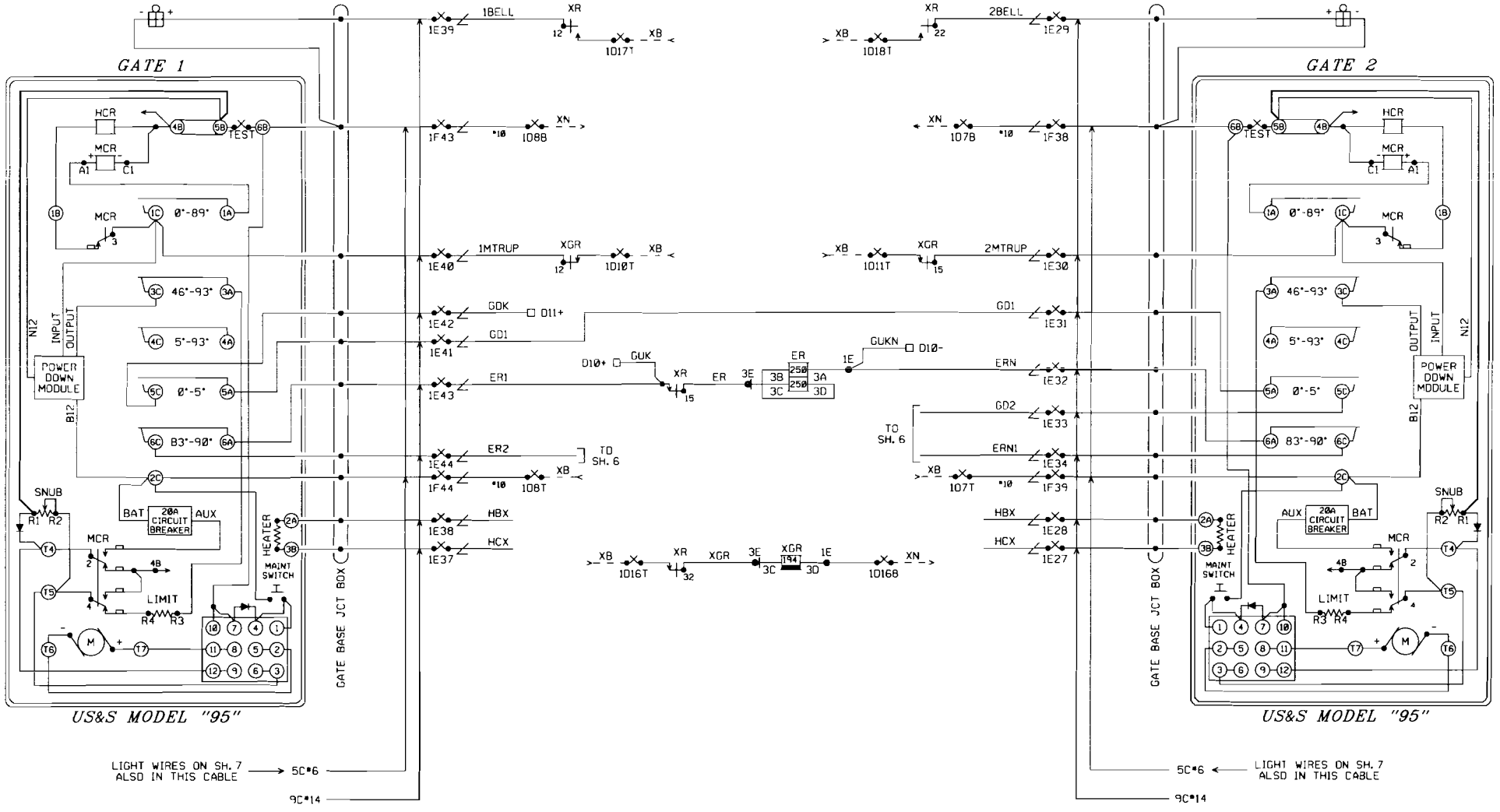

NOTE:
ADD JUMPERS IN GATE SHOWN IN BOLD.

ALL NEW

DESIGNED 11-28-07
INSTALL NEW CROSSING
RSD/BES SEQ.# 33612

BURLINGTON NORTHERN SANTA FE RAILWAY

GATE CIRCUIT PLAN
MAIN STREET SANDWICH, IL

LS 0001	MP 56.15	SH 05 OF 12

PLAN MUST NOT BE MODIFIED WITHOUT APPROVAL OF SIGNAL ENGINEERING

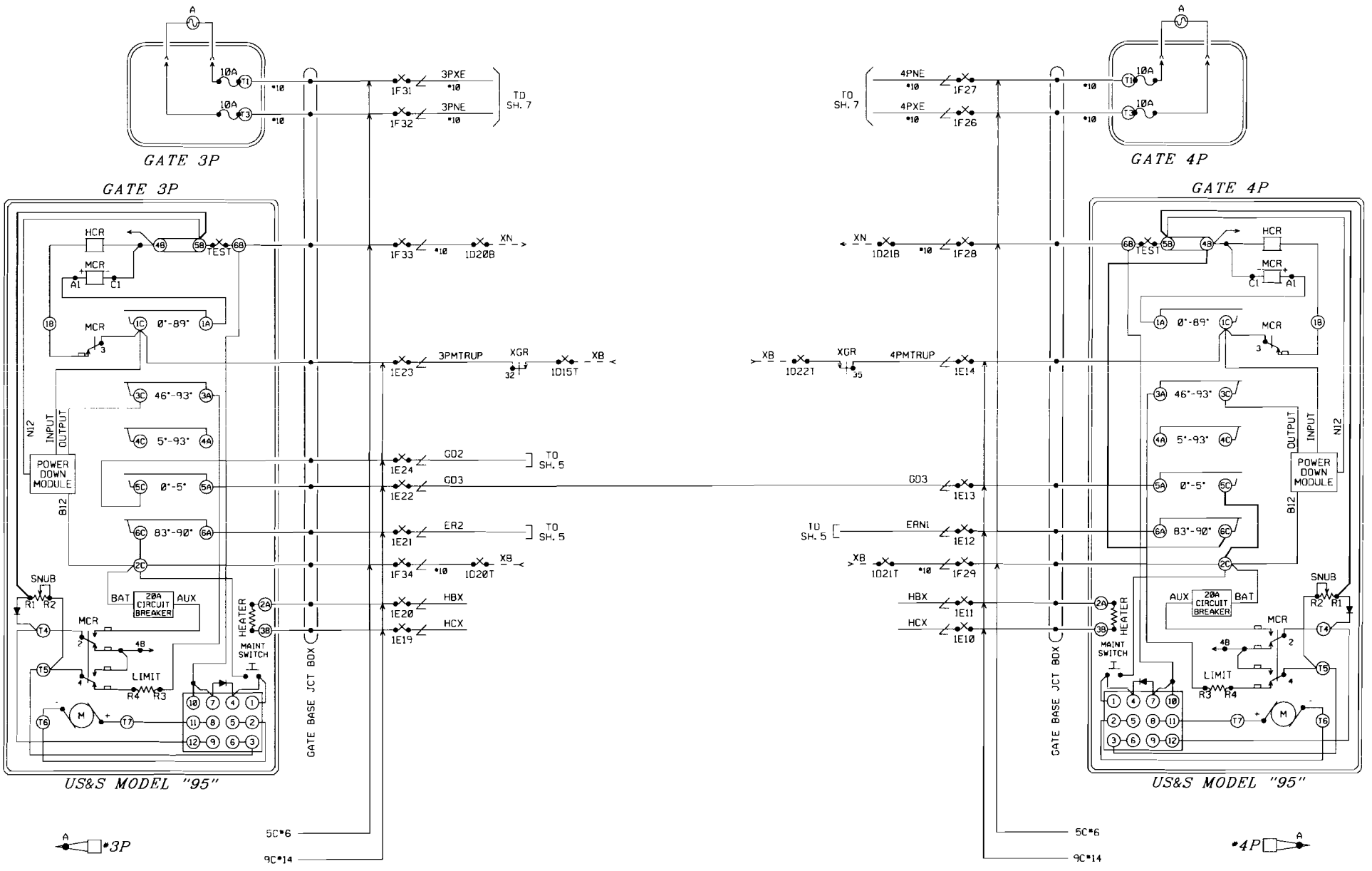

NOTE:
ADD JUMPERS IN GATE SHOWN IN BOLD.

ALL NEW

DESIGNED 11-28-07
INSTALL NEW CROSSING
RSD/BES SEQ.# 33612

BURLINGTON NORTHERN SANTA FE RAILWAY

PEDESTRIAN GATE CIRCUIT PLAN
MAIN STREET SANDWICH, IL

LS 0001 | MP 56.15 | SH 06 OF 12

PLAN MUST NOT BE MODIFIED WITHOUT APPROVAL OF SIGNAL ENGINEERING

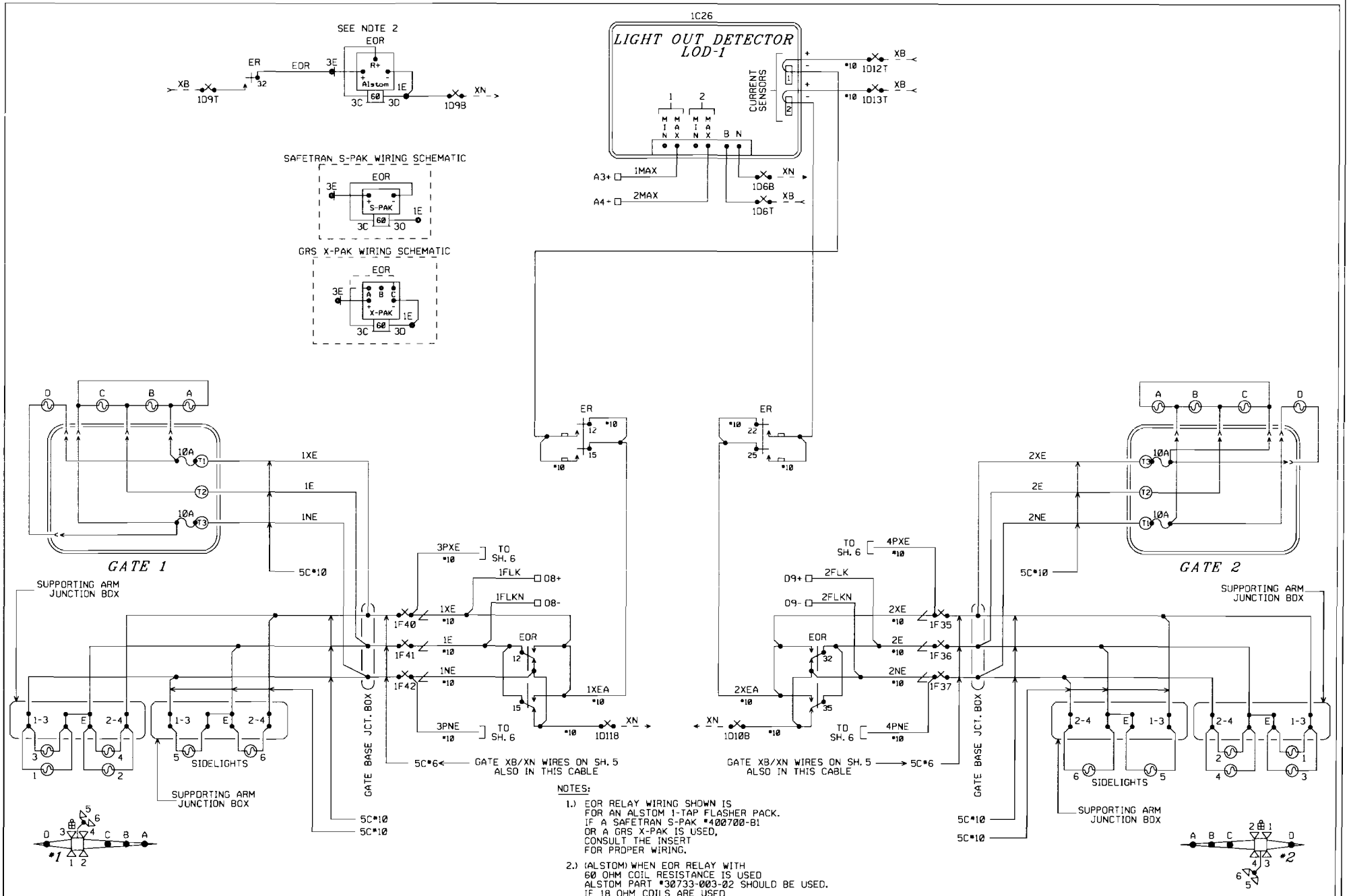

NOTES:

1.) EOR RELAY WIRING SHOWN IS FOR AN ALSTOM 1-TAP FLASHER PACK. IF A SAFETRAN S-PAK #400700-B1 OR A GRS X-PAK IS USED, CONSULT THE INSERT FOR PROPER WIRING.

2.) (ALSTOM) WHEN EOR RELAY WITH 60 OHM COIL RESISTANCE IS USED ALSTOM PART #30733-003-02 SHOULD BE USED. IF 18 OHM COILS ARE USED ALSTOM PART #30733-003-04 SHOULD BE USED.

3.) (X-PAK) WHEN EOR RELAY WITH 60 OHM COIL RESISTANCE IS USED CONNECT JUMPER FROM 3C TO 'A'. IF 18 OHM COILS ARE USED CONNECT JUMPER FROM 3C TO 'C'.

4.) (S-PAK) DO NOT USE S-PAK WITH 18 OHM COILS

ALL NEW

DESIGNED 11-28-07
INS ALL NEW CROSSING
RSD/BES SEQ.# 33612

BURLINGTON NORTHERN SANTA FE RAILWAY

FLASHER CIRCUIT PLAN
MAIN STREET SANDWICH, IL

LS 0001	MP 56.15	SH 07 OF 12

PLAN MUST NOT BE MODIFIED WITHOUT APPROVAL OF SIGNAL ENGINEERING

SIDE D

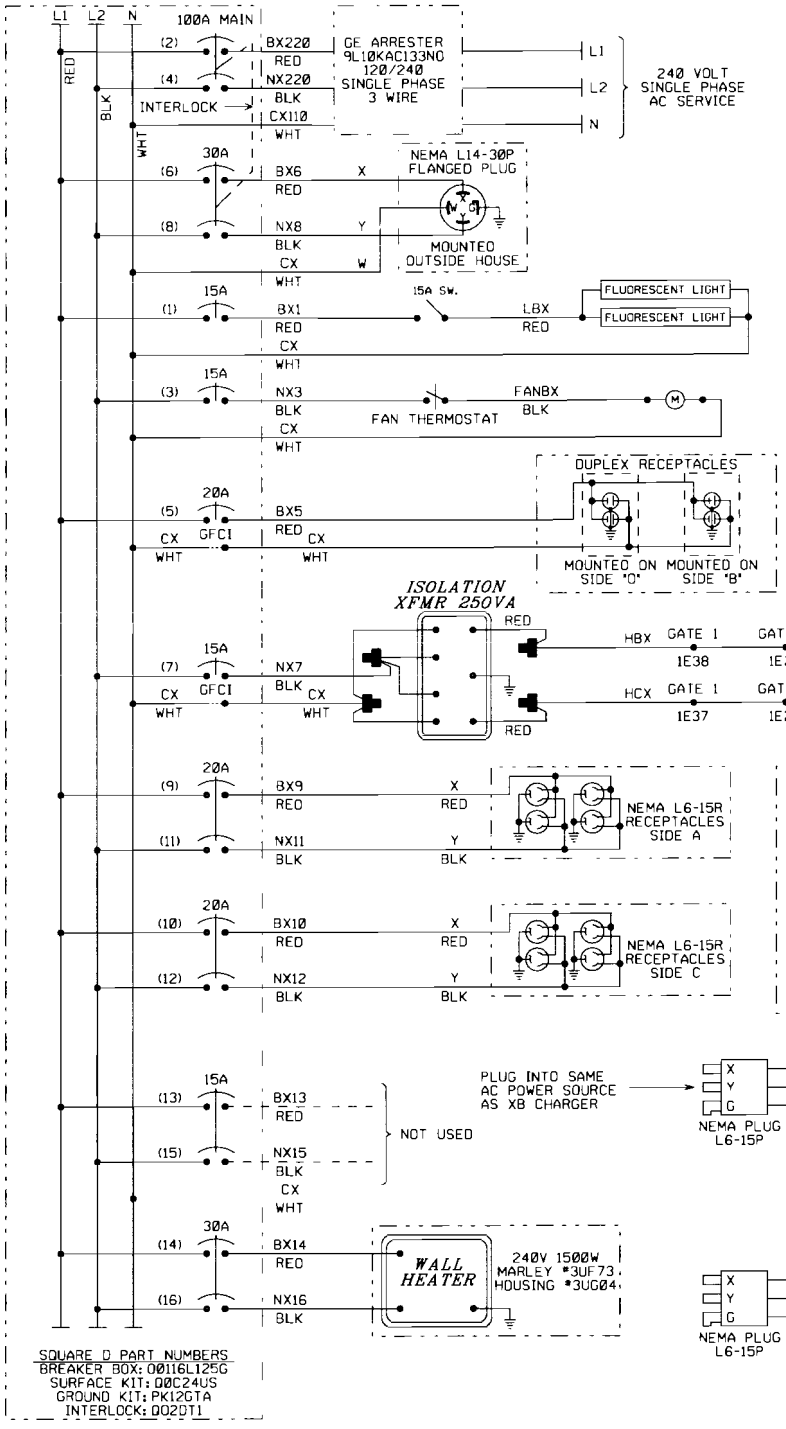

NOTES:

1. USE THE FOLLOWING COLOR CODE:
   GRN - GREEN - SAFETY EQUIPMENT GROUND
   WHT - WHITE - CX110 (NEUTRAL)
   BLK - BLACK - NX220 (L2)
   RED - RED - BX220 (L1)
   EXCEPTIONS TO THE ABOVE COLOR CODE ARE THE PRE-WIRED, SEALED ARRESTOR UNITS MOUNTED ON THE BREAKER BOX WHICH HAVE TWO BLACK AND ONE WHITE WIRE EACH.
2. ▶ = WIRE NUT
3. MINIMUM WIRE SIZE
   10 AMP - NO. 14 AWG THHN OR THWN SOLID
   20 AMP - NO. 12 AWG THHN OR THWN SOLID
   30 AMP - NO. 10 AWG THHN OR THWN SOLID
4. GROUND FAULT INTERRUPT (GFCI) MUST BE USED ON ALL CIRCUITS SERVING CONVENIENCE OUTLETS AND ANY EQUIPMENT OUTSIDE THE BUNGALOW. RECEPTACLE MOUNTED GFCI MAY BE USED INSTEAD OF BREAKER TYPE.
5. ISOLATION TRANSFORMER IF INSTALLED.
   JUMPER WIRES BLK/YEL TO BLK/GRN WITH CX (WHT)
   JUMPER WIRES BLK TO BLK/RED WITH NX/ (BLK)
6. ALL GROUND WIRES RUN TO BREAKER BOX GROUND BUSS

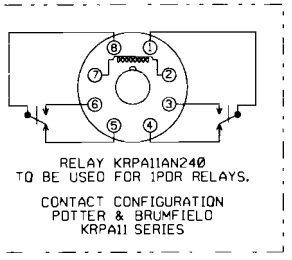

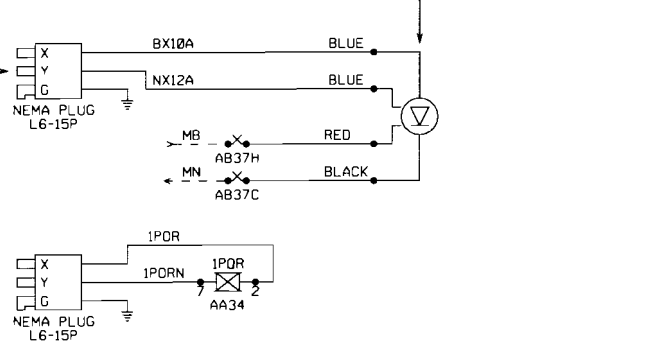

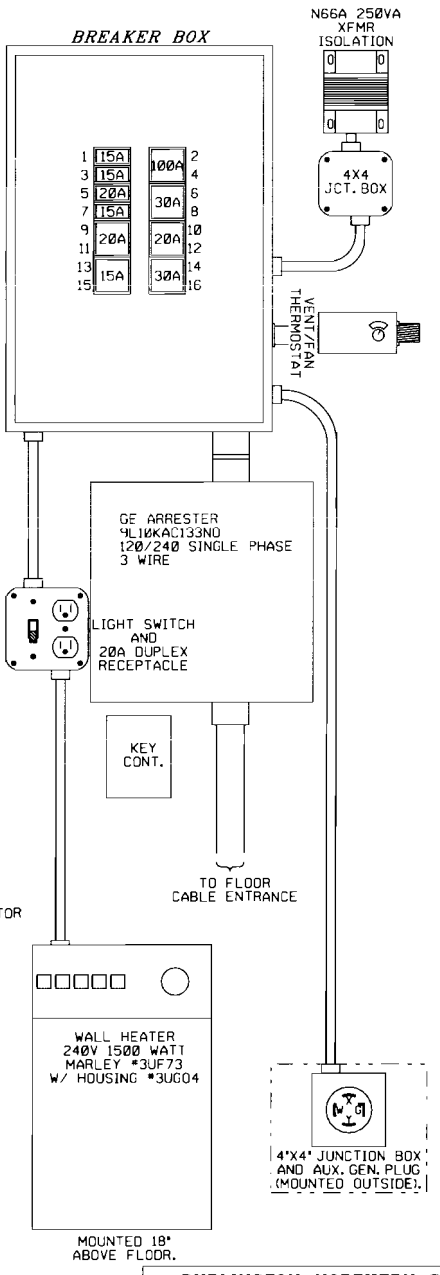

A
B
C

ALL NEW

DESIGNED 11-28-07
INSTALL NEW CROSSING
RSO/BES SEQ.# 33612

BURLINGTON NORTHERN SANTA FE RAILWAY

POWER DISTRIBUTION
MAIN STREET SANDWICH, IL

LS 0001 | MP 56.15 | SH 08 OF 12

PLAN MUST NOT BE MODIFIED WITHOUT APPROVAL OF SIGNAL ENGINEERING

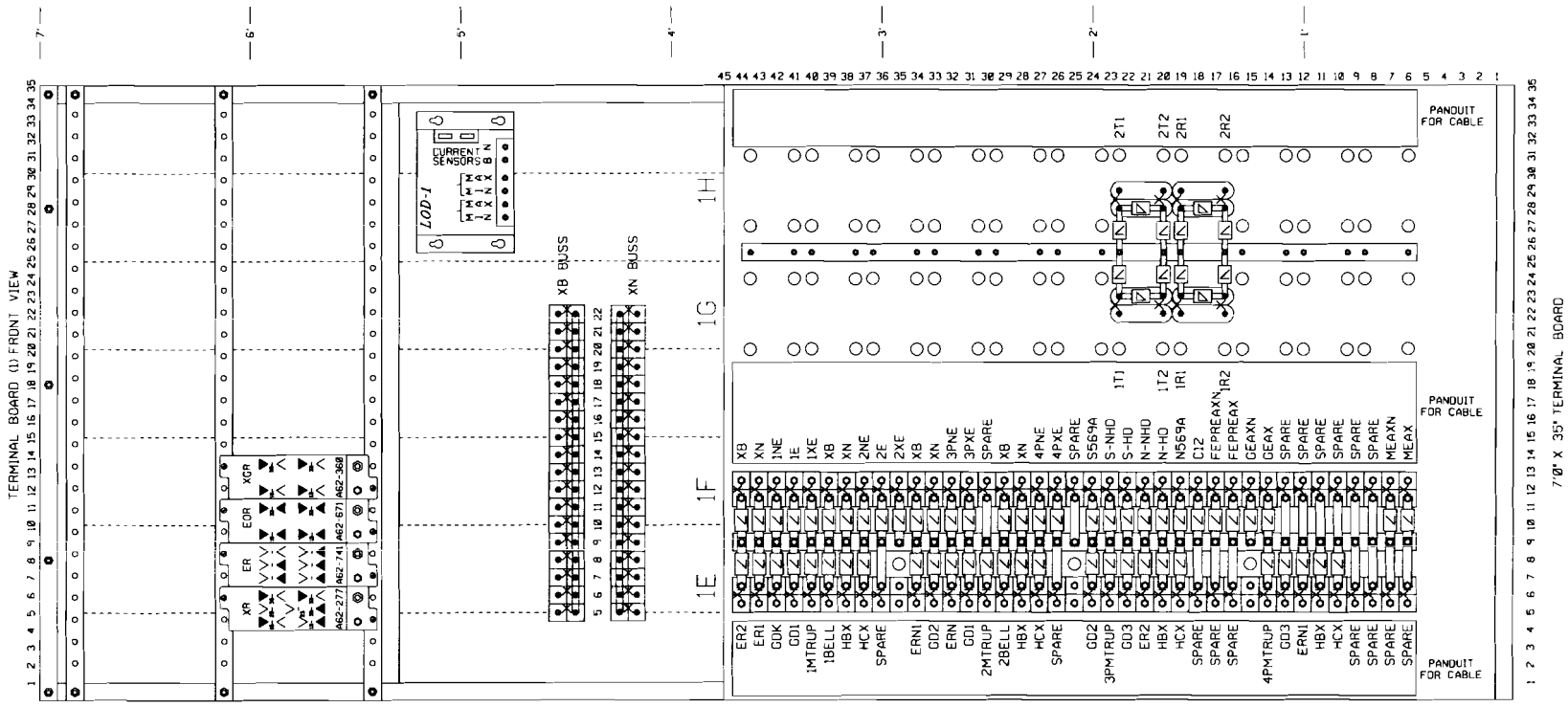

CABLE SHIELDS ARE TO BE WIRED TO GROUND
SPARE CABLE CONDUCTORS ARE TO BE CONNECTED TO GROUND

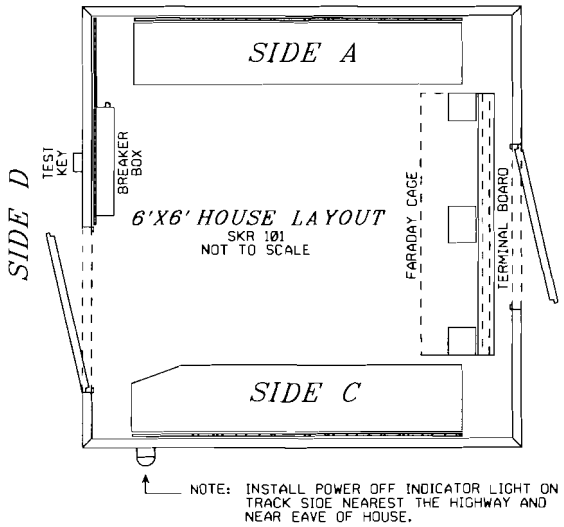

NOTE: INSTALL POWER OFF INDICATOR LIGHT ON TRACK SIDE NEAREST THE HIGHWAY AND NEAR EAVE OF HOUSE.

NOMENCLATURE FOR XB AND XN BUSS:

XB BUSS		XN BUSS
XGR 36	5 6 7 8 9 10 11 12 13 14 15 16 17 18 19 20 21 22	1F28
1F29		1F33
1F34		REC N
REC B		
XR 21		
XR 11		
XR 33		XGR 1E
XGR 33		REC D11-
XR 36		REC D7-
L001 2+		REC A4-
L001 1+		REC A3-
XGR 16		EOR 14
XGR 13		EOR 34
ER 31		EOR 1E
1F44		1F43
1F39		1F38
L001 B		L001 N
XB BATT+		XB BATT-

FARADAY CAGE LAYOUT NOTES:

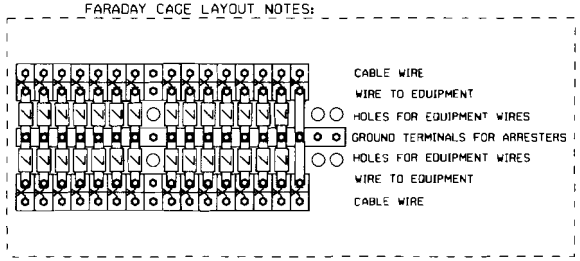

RELAY CROSS REFERENCE

GRS	SAFETRAN
A62-277	400004
A62-741	400005
A62-671	400700
A62-360	400200

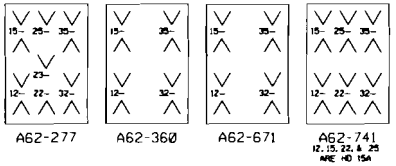

ALL NEW

DESIGNED 11-28-07
INSTALL NEW CROSSING
RSD/BES SEQ.# 33612

BURLINGTON NORTHERN SANTA FE RAILWAY

TERMINAL BOARD LAYOUT
MAIN STREET SANDWICH, IL

LS 0001 | MP 56.15 | SH 09 OF 12

Typ: 071307 Ch: Y

PLAN MUST NOT BE MODIFIED WITHOUT APPROVAL OF SIGNAL ENGINEERING

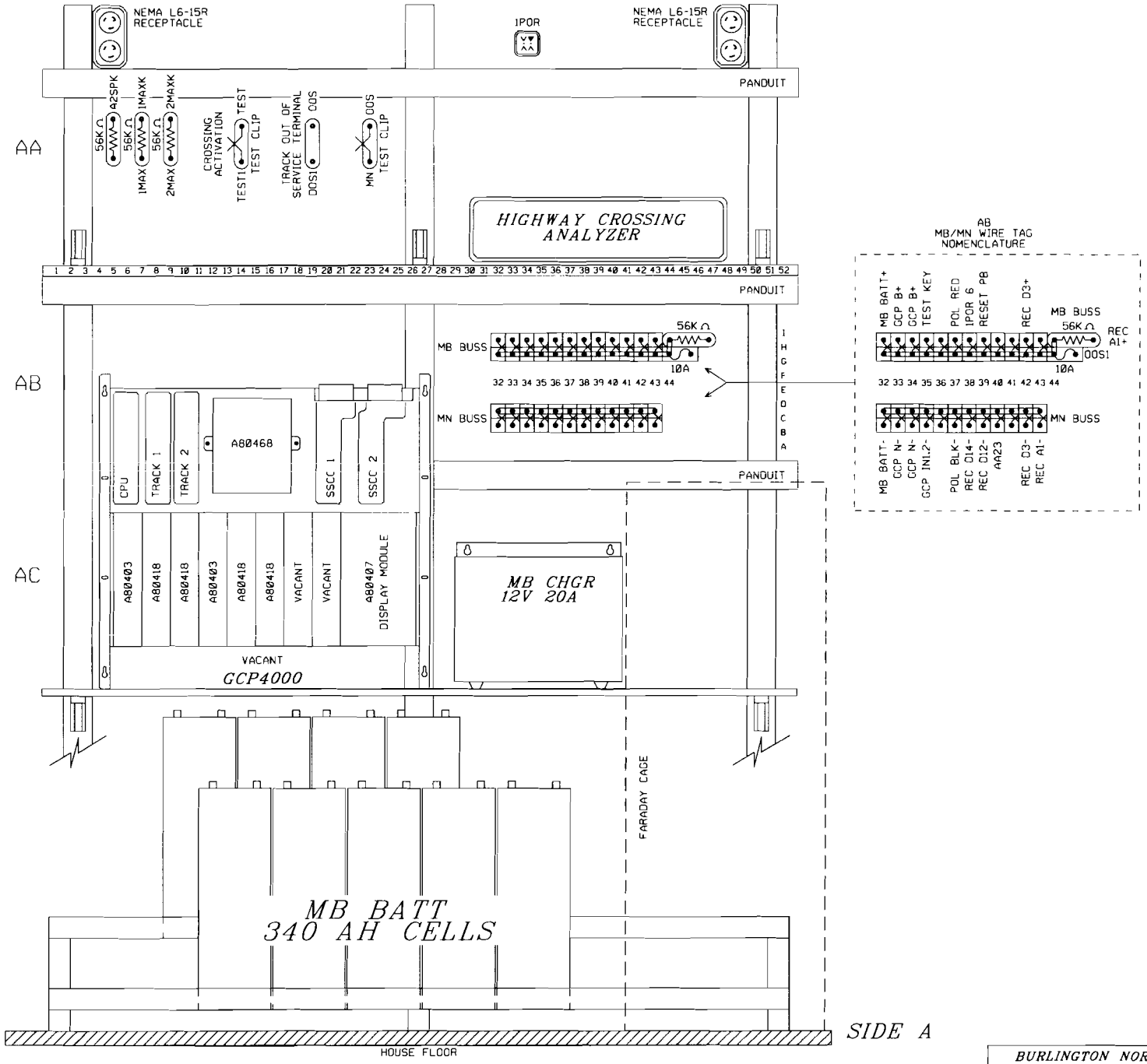

ALL NEW

DESIGNED 11-28-07
INSTALL NEW CROSSING
RSD/BES SEQ.# 33612

BURLINGTON NORTHERN SANTA FE RAILWAY

SIDE "A" SHELF LAYOUT
MAIN STREET SANDWICH, IL

LS 0001 | MP 56.15 | SH 10 OF 12

0001056_15x10c_.dgn NOVEMBER 28, 2007

PLAN MUST NOT BE MODIFIED WITHOUT APPROVAL OF SIGNAL ENGINEERING

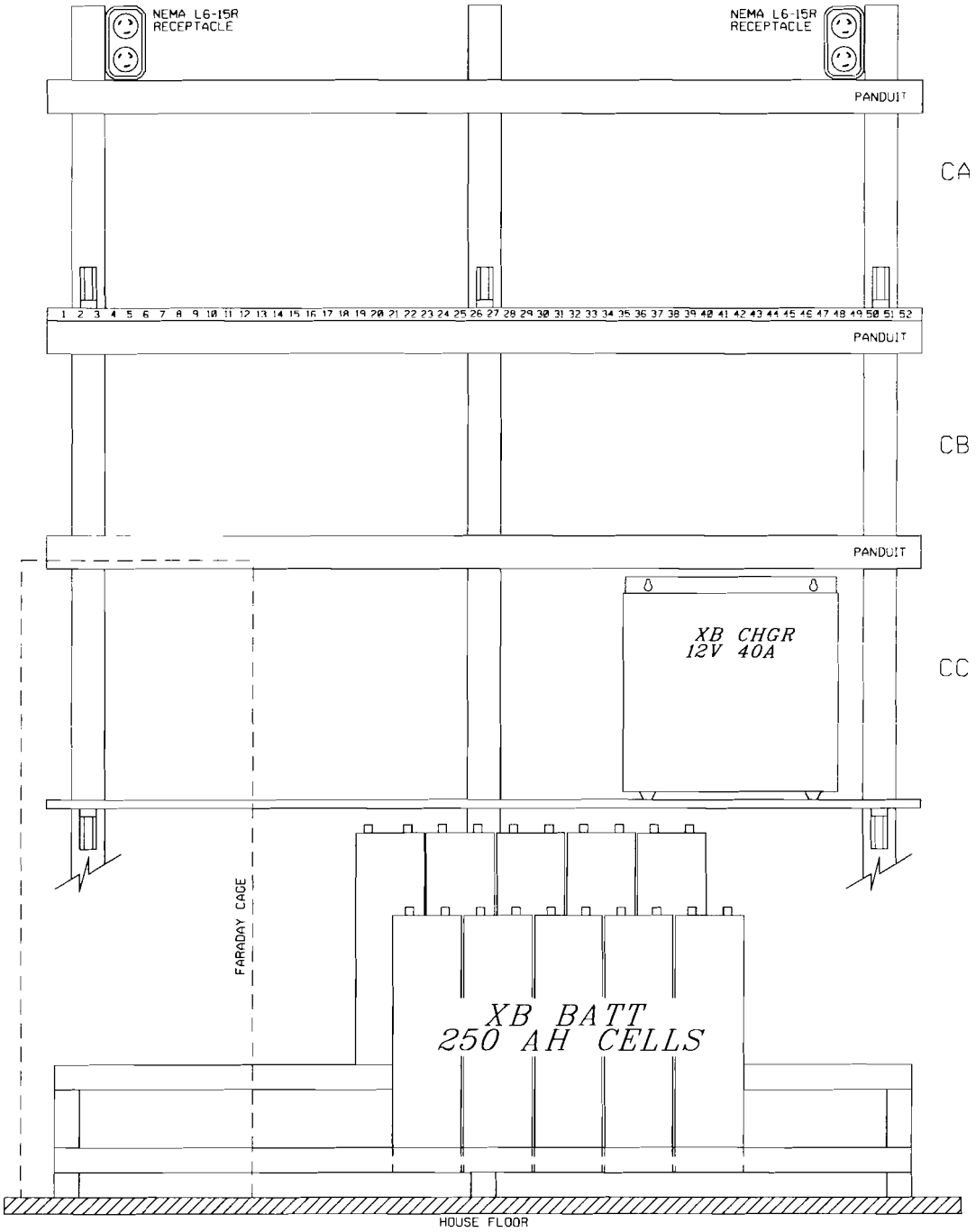

SIDE C

ALL NEW

BURLINGTON NORTHERN SANTA FE RAILWAY

SIDE "C" SHELF LAYOUT
MAIN STREET SANDWICH, IL

DESIGNED 11-28-07
INSTALL NEW CROSSING
RSD/BES SED.# 33612

LS 0001	MP 56.15	SH 11 OF 12

0001056_15x11c_.dgn NOVEMBER 28, 2007

PLAN MUST NOT BE MODIFIED WITHOUT APPROVAL OF SIGNAL ENGINEERING

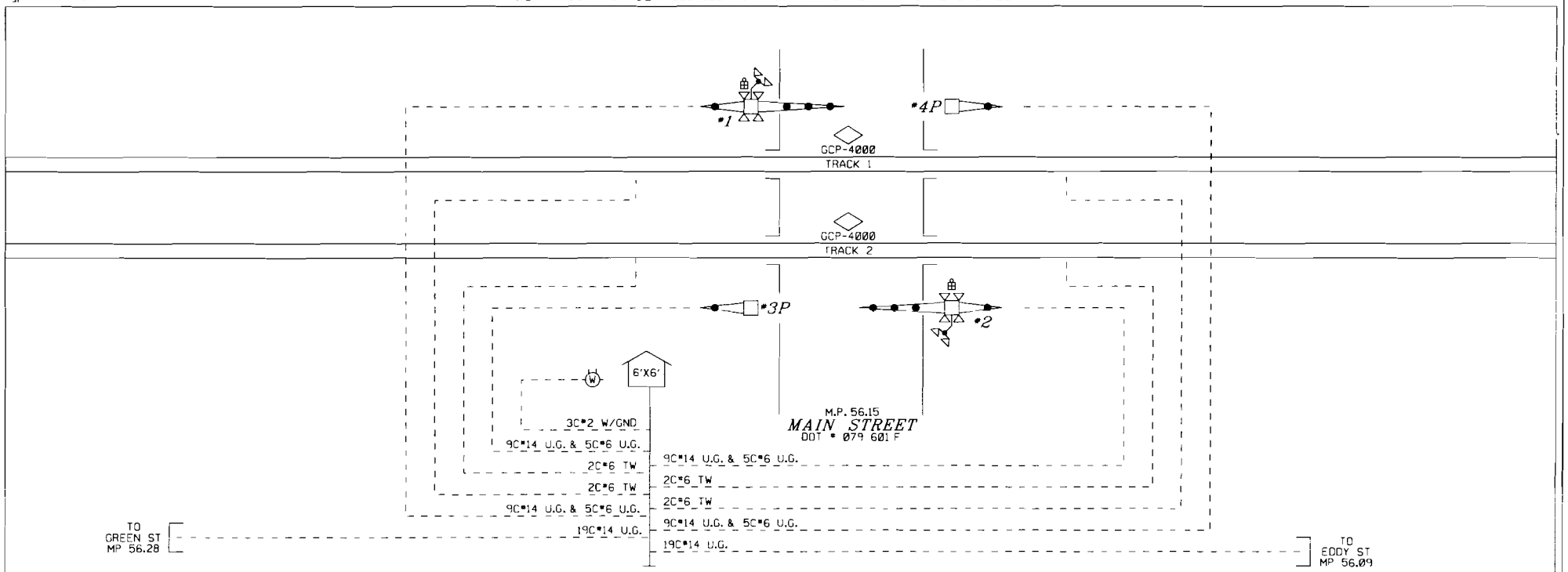

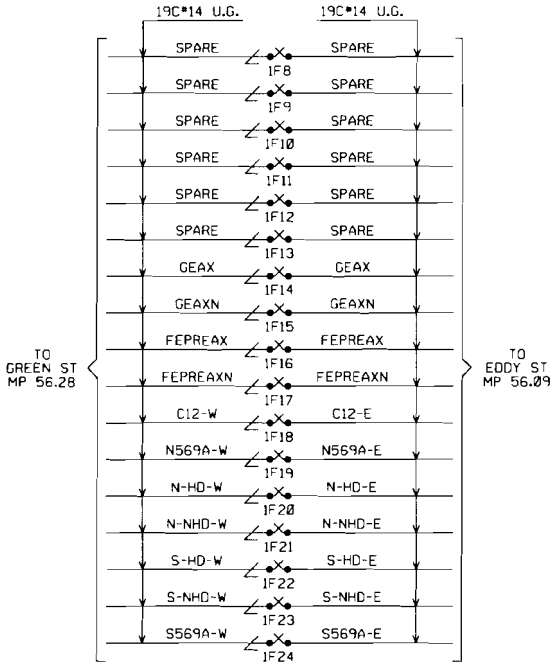

ALL NEW

BURLINGTON NORTHERN SANTA FE RAILWAY

CABLE LAYOUT
MAIN STREET SANDWICH, IL

DESIGNED 11-28-07
INSTALL NEW CROSSING
RSD/BES SEQ.# 33612

LS 0001 | MP 56.15 | SH 12 OF 12