Typ: 043007 Ch: Y

PLAN MUST NOT BE MODIFIED WITHOUT APPROVAL OF SIGNAL ENGINEERING

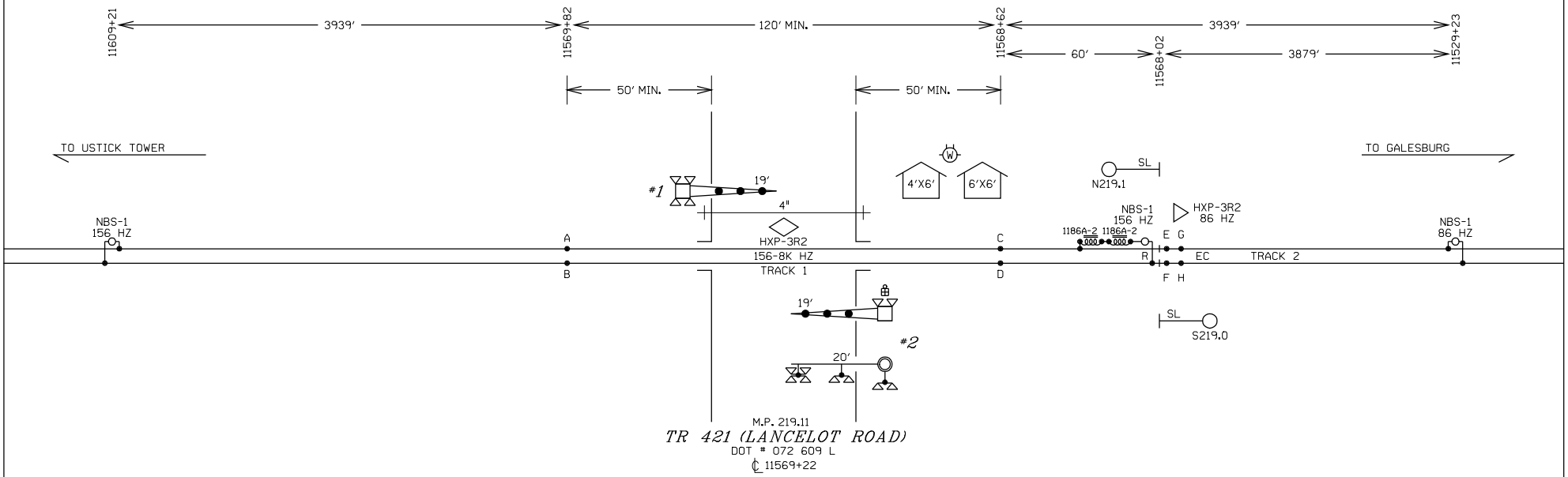

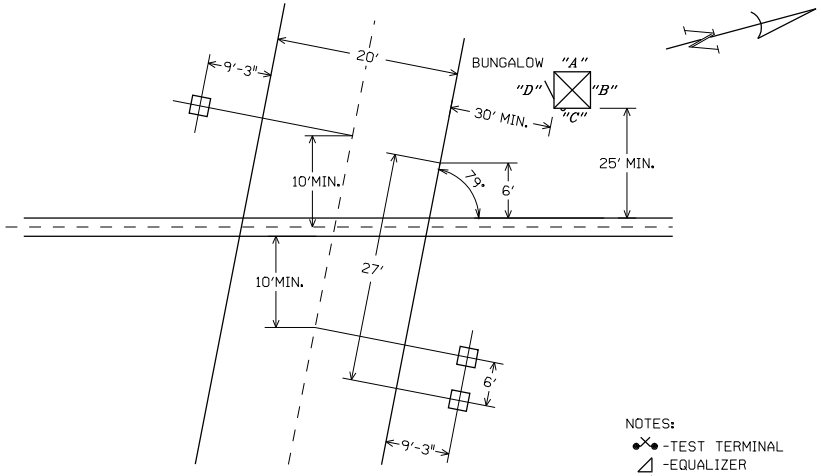

FOUNDATION PLACEMENT SKETCH
NOT TO SCALE

NOTES:

EQUIPMENT IS DESIGNED FOR 20 SECONDS MINIMUM WARNING TIME AT 79 MPH.
APPROACHES WERE LENGTHENED 10 SECONDS FOR SPEED VARIANCE AND BALLAST CHANGES (BT).
APPROACHES WERE LENGTHENED 4 SECONDS FOR EQUIPMENT RESPONSE TIME (ERT).
ALL LAMPS TO BE LED
GATE LENGTH SHOWN IS MEASURED FROM MAST C/L TO GATE TIP.

NOTES:

-TEST TERMINAL
-EQUALIZER
-LINE ARRESTER
-HEAVY DUTY ARRESTER
-TWISTED WIRE 2 TURNS PER FOOT
-CONNECTION TO REC./RTU

ALL WIRES #16 AWG UNLESS OTHERWISE NOTED

ALL NEW

DESIGNED 05-07-08
NEW XING MP 219.11
SSD/JRE SEQ.# 37135

BURLINGTON NORTHERN SANTA FE RAILWAY

CROSSING CIRCUIT PLAN
TR 421 (LANCELOT) COLMAR, IL

LS 0011 | MP 219.11 | SH 01 OF 10

0011219_11x01c_.dgn May 7, 2008

PLAN MUST NOT BE MODIFIED WITHOUT APPROVAL OF SIGNAL ENGINEERING

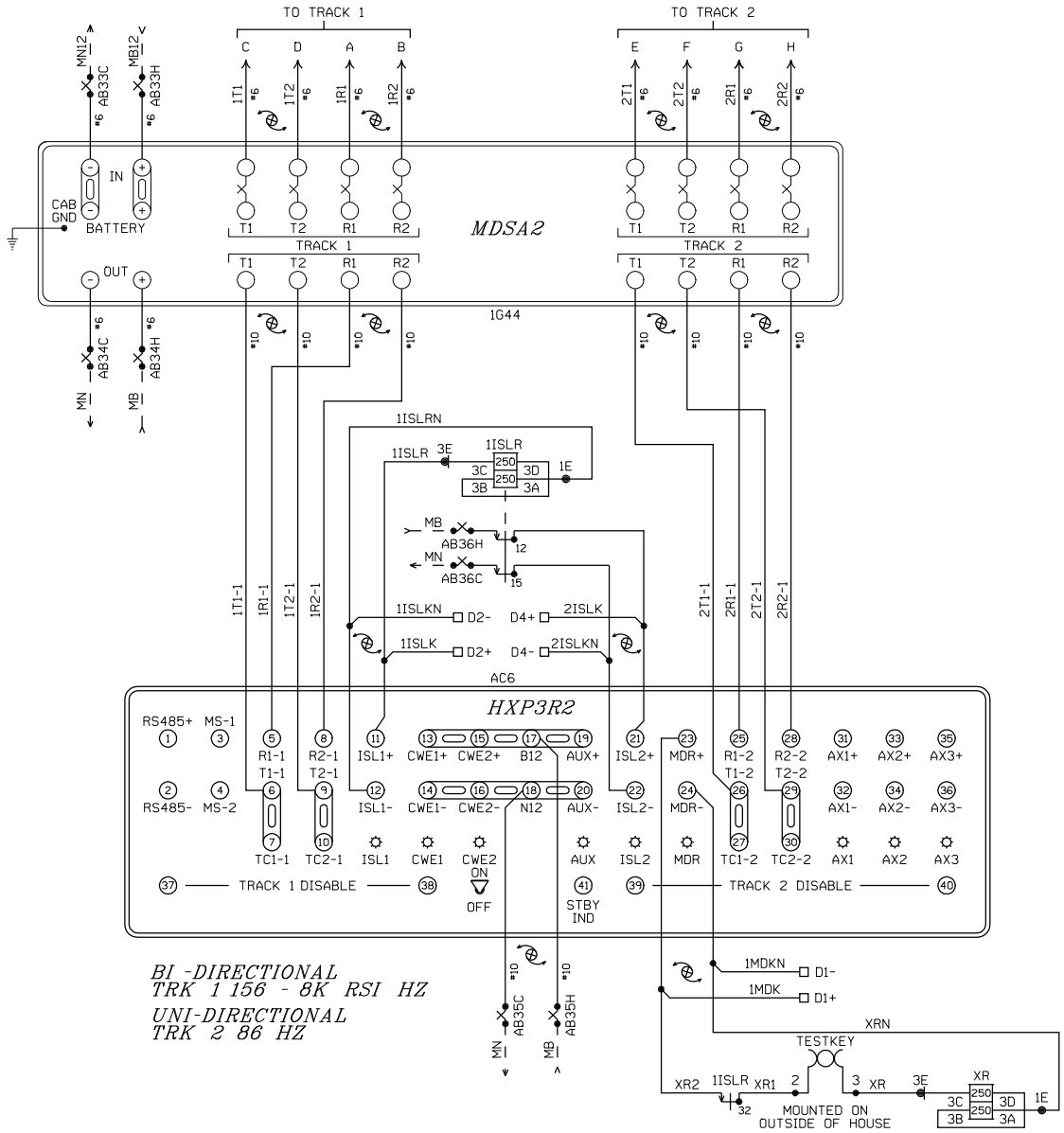

PROGRAM INFORMATION

PROGRAM VERSION 35.0 OR LATER

*=FIELD ADJUSTMENT TO BE MADE ACCORDING TO THE HXP-3 INSTRUCTION MANUAL AND SUPPLEMENTS.

HXP-3R2 ADJUSTMENTS

NO.	ADJUSTMENT NAME	TRACK 1	TRACK 2
1	APP. LENGTH	3939'	3939'
2	WARNING TIME	30 SEC.	30 SEC.
3	LIA	*	*
4	TC	*	*
5	MD RESTART	*	*

OPTION ADJUSTMENTS

NO.	ABBREVIATION	TRACK 1	TRACK 2
1	TK-ENA	"UP"	"UP"
2	TK FO	156 HZ	86 HZ
3	CW/MD	"C"	"C"
4	UNI-BI	"b" (BI)	"U" (UNI)
5	NBS-C	*	*
6	CWEWT	DL (80 SEC.)	DL (80 SEC.)
7	LOS	DL (16 SEC.)	DL (16 SEC.)
8	IJ-LOS	DL (5 SEC.)	DL (5 SEC.)
9	BC	*	*
10	P-COMP	*	*
11	AX1	NA	NA
12	AX2	NA	NA
13	AX3	NA	NA
17	MDR-AX/OF-TK 1 OR 2	DL (0)	60'
	CJ-LOS	DL (0)	DL (0)
	PJ-DET	DL (15 SEC.)	DL (15 SEC.)
	PJ-RX	DL (15)	DL (15)
18	MD-TMR	DL (10 MIN.)	DL (10 MIN.)
19	MIN-WT	DL (0)	DL (0)
20	FS-RX	DL (0)	DL (0)
	FS-TM	DL (10 MIN.)	DL (10 MIN.)
21	POS-RX	DL (0)	DL (0)
	POS-TM	DL (0)	DL (0)
22	AR-RX	DL (0)	DL (0)
	AR-TM	DL (10 MIN.)	DL (10 MIN.)
47	ATO-RX	UP	UP
48	PF-ENA	"dn"	"dn"

AX ADJUSTMENTS

NO.	ABBREVIATION	AX 1	AX 2	AX 3
1	TK-ASN	NA	NA	NA
2	OF-TK1	NA	NA	NA
3	OF-TK2	NA	NA	NA
4	WT	NA	NA	NA
5	MD-RST	NA	NA	NA
6	CW/MD	NA	NA	NA
7	CJ-LOS	NA	NA	NA
8	PJ-DET	NA	NA	NA
9	PJ-RX	NA	NA	NA
10	POS-ST	NA	NA	NA

SWITCH INFORMATION

SWITCH	TRACK 1	TRACK 2
MASTER/SLAVE	MASTER	MASTER
RSI FAULT JUMPER	0	0
RSI-LOS JUMPER	1	1
TLM W1 JUMPER	PINS 1-2	
TLM W2 JUMPER	PINS 1-2	
TLM W3 JUMPER	PINS 2-3	
MINUTE TIMEOUT	5 MIN	
CW/MD	CW	
STANDBY/AUTO/NORMAL	AUTO	

NOTE: DL= DEFAULT LEVEL
NA= NON APPLICABLE

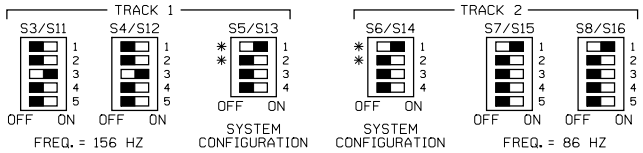

NOTES: FOR S5/S13 AND S6/S14
*1.) ACTUATOR 1 SELECTS NORMAL APPROACH WHEN SET TO ON POSITION.
*2.) WITH ACTUATOR 1 IN OFF POSITION ACTUATOR 2 SELECTS SHORT APPROACH WHEN OFF AND SELECTS VERY SHORT WHEN ON.
3.) ACTUATOR 3 OFF SELECTS HXP OPERATION.
4.) ACTUATOR 4 RESERVED FOR FUTURE USE.

ALL NEW

DESIGNED 05-07-08
NEW XING MP 219.11
SSD/JRE SEQ.# 37135

BURLINGTON NORTHERN SANTA FE RAILWAY

HXP-3R2 TRACK CIRCUITS
TR 421 (LANCELOT) COLMAR, IL

LS 0011 MP 219.11 SH 02 OF 10

PLAN MUST NOT BE MODIFIED WITHOUT APPROVAL OF SIGNAL ENGINEERING

PROGRAM BNSF4

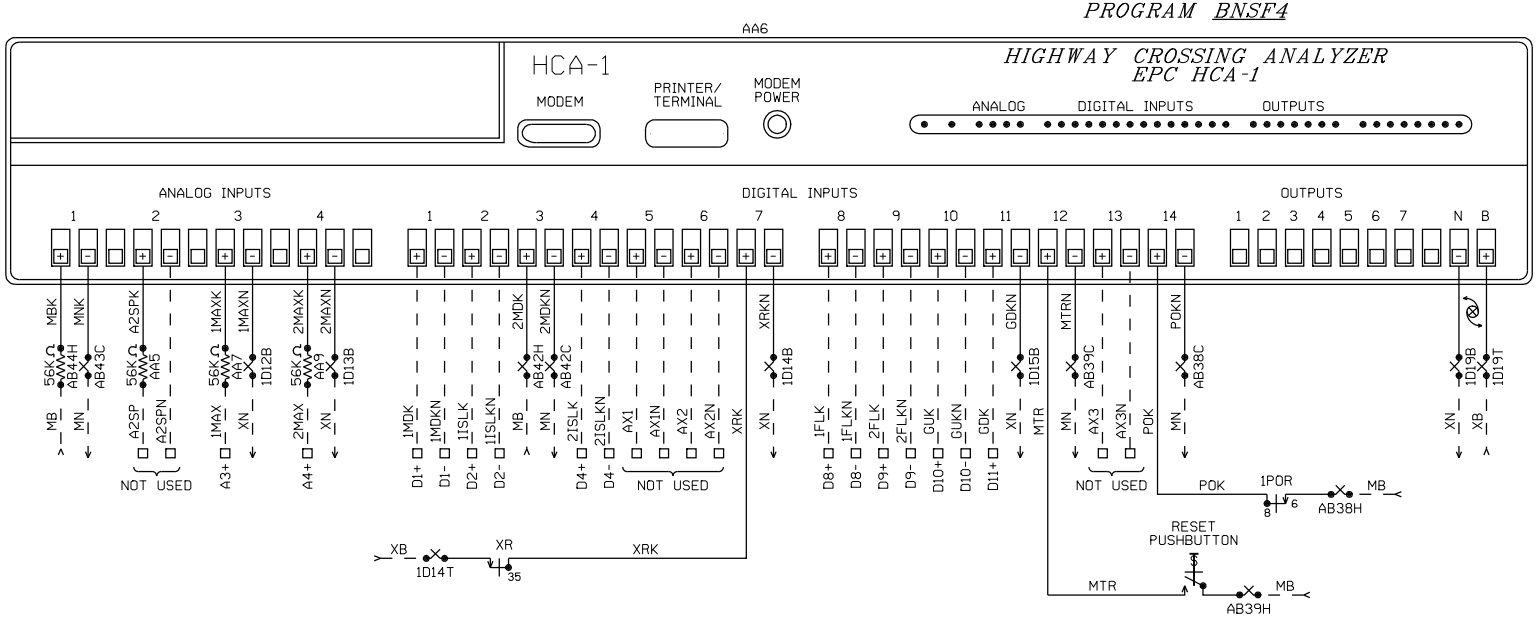

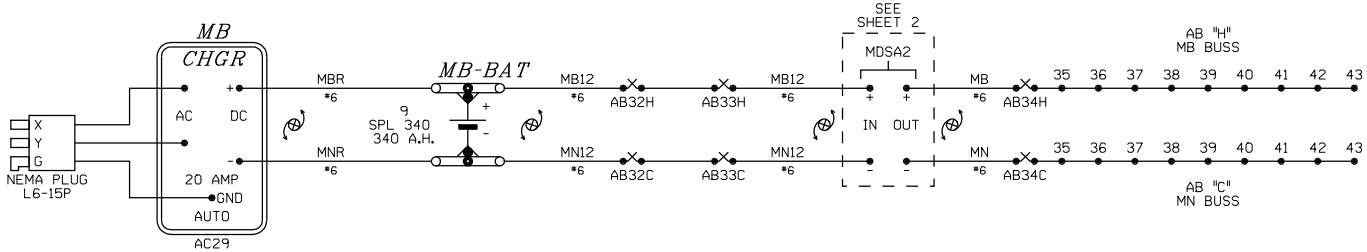

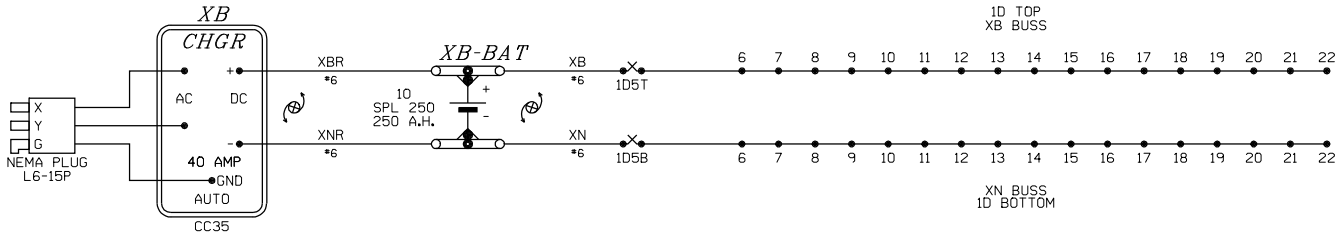

ALL NEW

BURLINGTON NORTHERN SANTA FE RAILWAY

RECORDER AND BATTERY CIRCUITS
TR 421 (LANCELOT) COLMAR, IL

DESIGNED 05-07-08
NEW XING MP 219.11
SSD/JRE SEQ.# 37135

LS 0011 | MP 219.11 | SH 03 OF 10

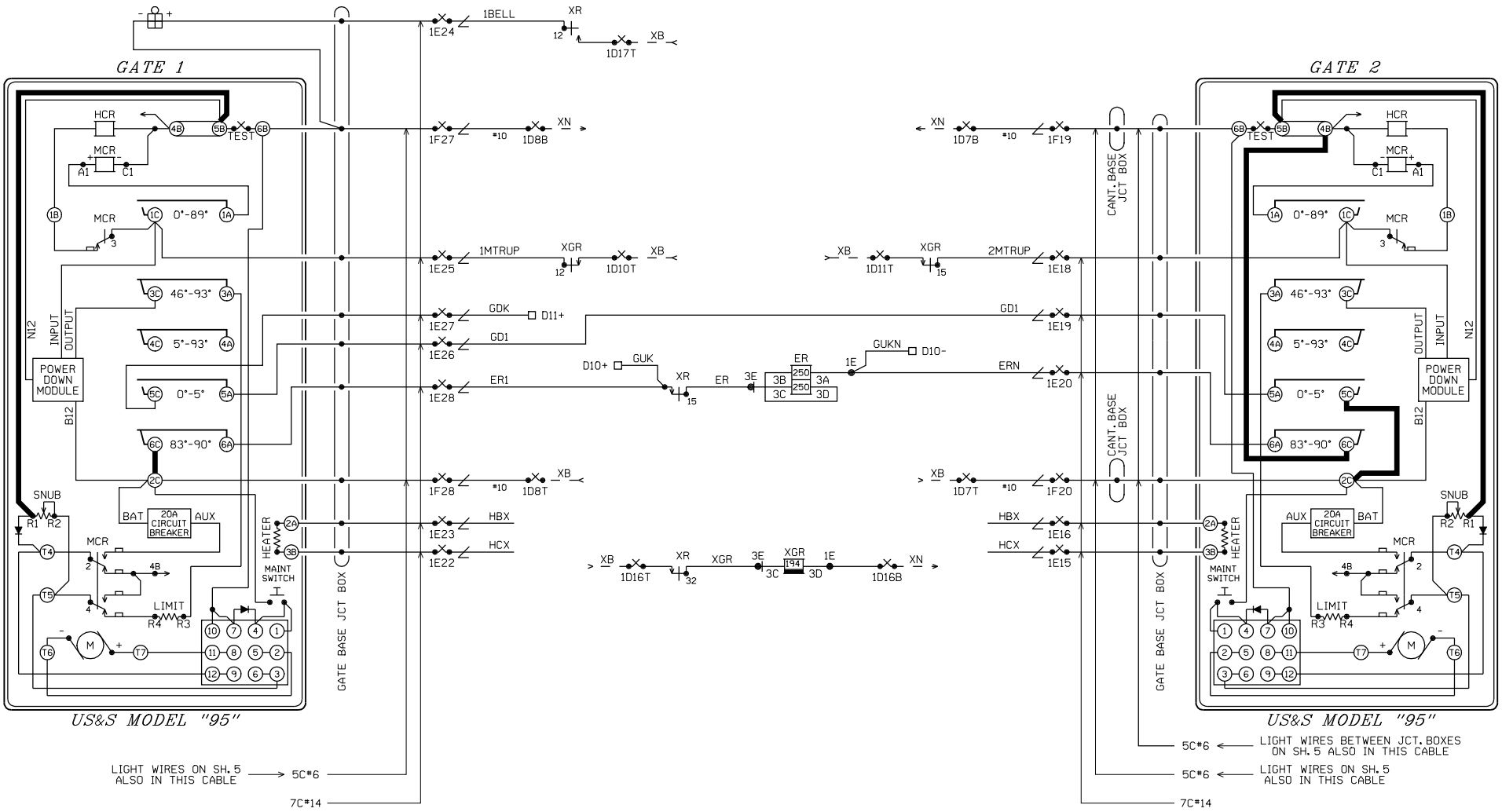

NOTE:
ADD JUMPERS IN GATE SHOWN IN BOLD.

ALL NEW

DESIGNED 05-07-08
NEW XING MP 219.11
SSD/JRE SEQ.# 37135

BURLINGTON NORTHERN SANTA FE RAILWAY

GATE CIRCUIT PLAN
TR 421 (LANCELOT) COLMAR, IL

LS 0011 | MP 219.11 | SH 04 OF 10

PLAN MUST NOT BE MODIFIED WITHOUT APPROVAL OF SIGNAL ENGINEERING

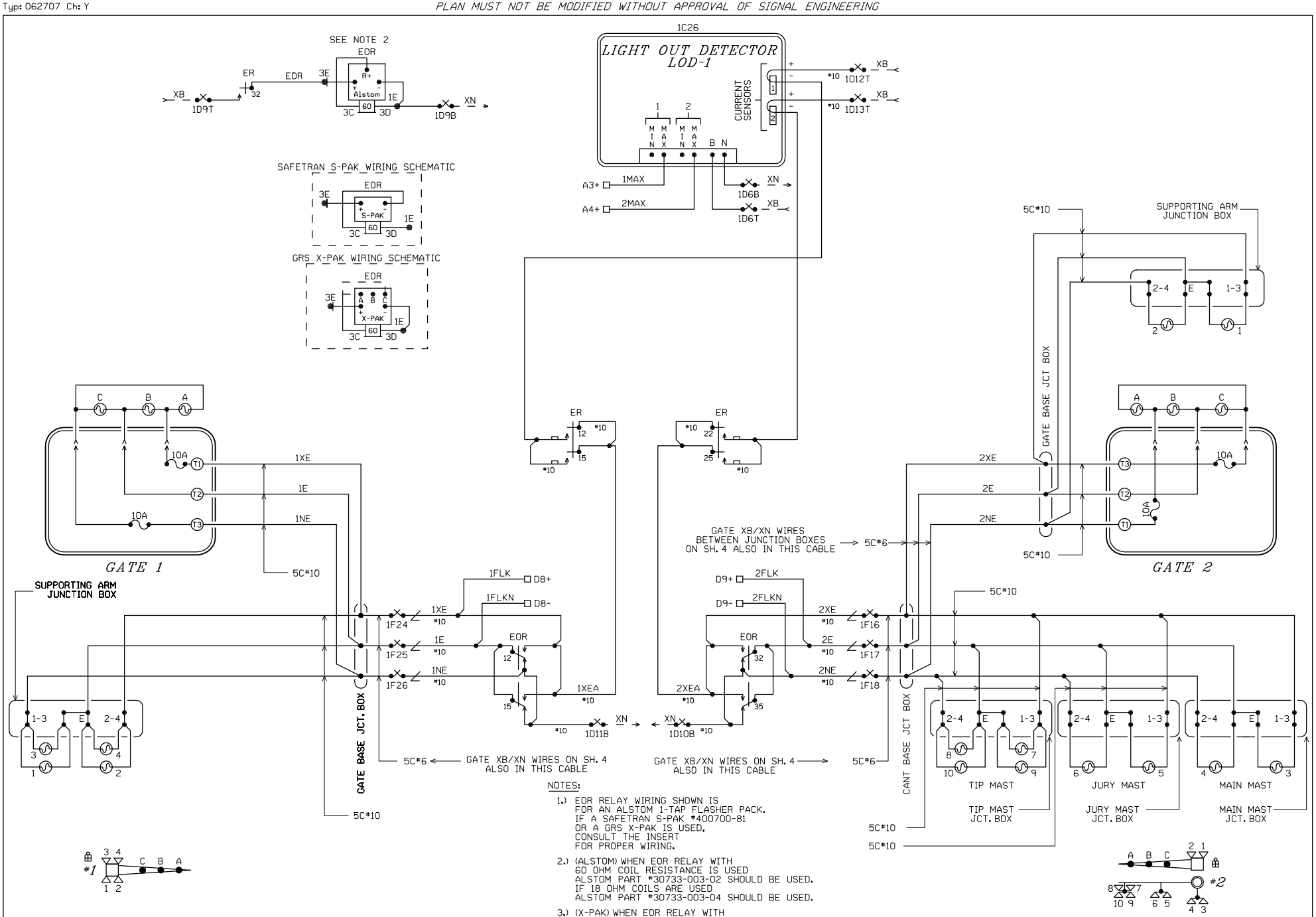

NOTES:

1.) EOR RELAY WIRING SHOWN IS FOR AN ALSTOM 1-TAP FLASHER PACK. IF A SAFETRAN S-PAK #400700-81 OR A GRS X-PAK IS USED, CONSULT THE INSERT FOR PROPER WIRING.

2.) (ALSTOM) WHEN EOR RELAY WITH 60 OHM COIL RESISTANCE IS USED ALSTOM PART #30733-003-02 SHOULD BE USED. IF 18 OHM COILS ARE USED ALSTOM PART #30733-003-04 SHOULD BE USED.

3.) (X-PAK) WHEN EOR RELAY WITH 60 OHM COIL RESISTANCE IS USED CONNECT JUMPER FROM 3C TO "A". IF 18 OHM COILS ARE USED CONNECT JUMPER FROM 3C TO "C".

4.) (S-PAK) DO NOT USE S-PAK WITH 18 OHM COILS

ALL NEW

DESIGNED 05-07-08
NEW XING MP 219.11
SSD/JRE SEQ.# 37135

BURLINGTON NORTHERN SANTA FE RAILWAY

FLASHER CIRCUIT PLAN
TR 421 (LANCELOT) COLMAR, IL

LS 0011 | MP 219.11 | SH 05 OF 10

PLAN MUST NOT BE MODIFIED WITHOUT APPROVAL OF SIGNAL ENGINEERING

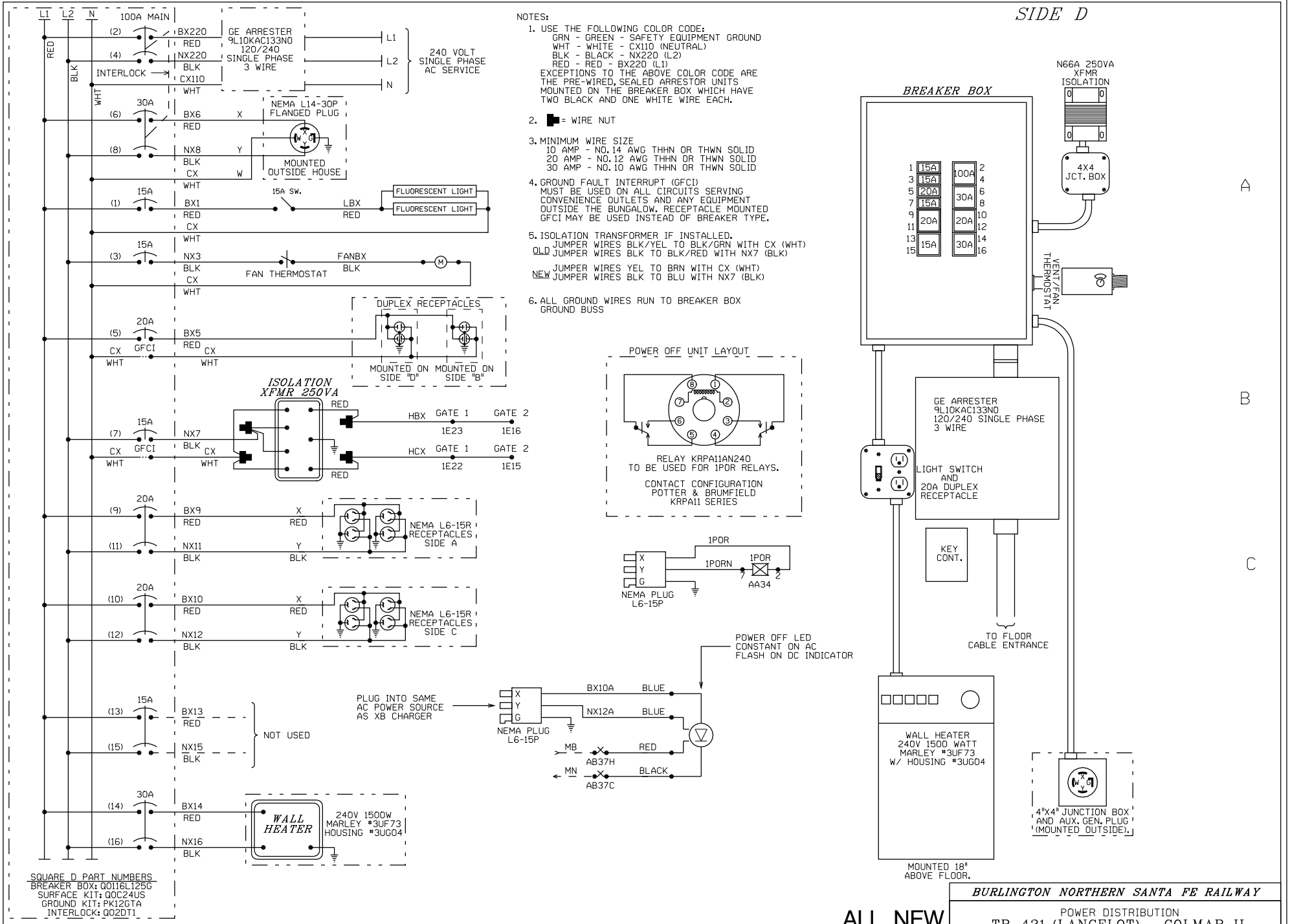

ALL NEW

BURLINGTON NORTHERN SANTA FE RAILWAY

POWER DISTRIBUTION
TR 421 (LANCELOT) COLMAR, IL

DESIGNED 05-07-08
NEW XING MP 219.11
SSD/JRE SEQ.# 37135

LS 0011 | MP 219.11 | SH 06 OF 10

Typ: 071307 Ch: Y

PLAN MUST NOT BE MODIFIED WITHOUT APPROVAL OF SIGNAL ENGINEERING

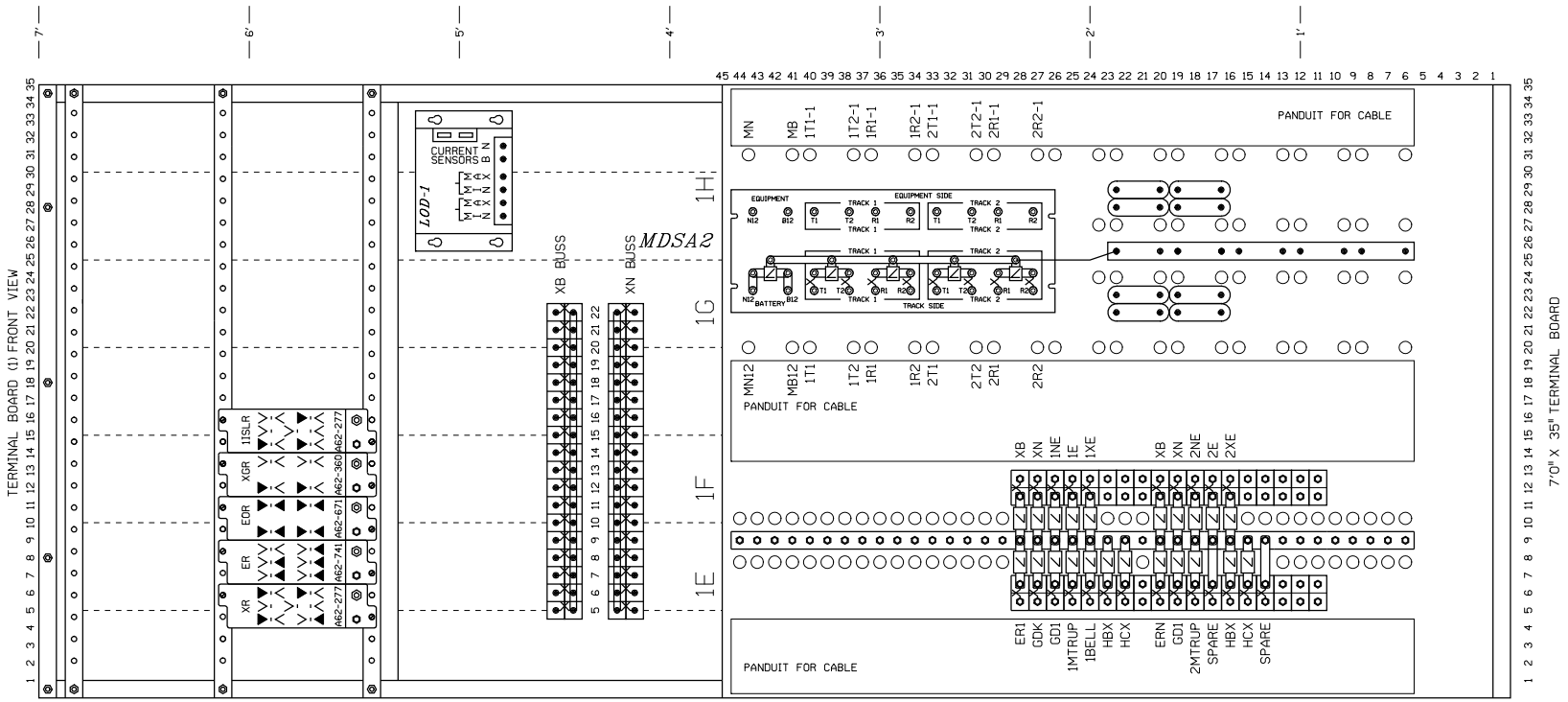

CABLE SHIELDS ARE TO BE WIRED TO GROUND
SPARE CABLE CONDUCTORS ARE TO BE CONNECTED TO GROUND

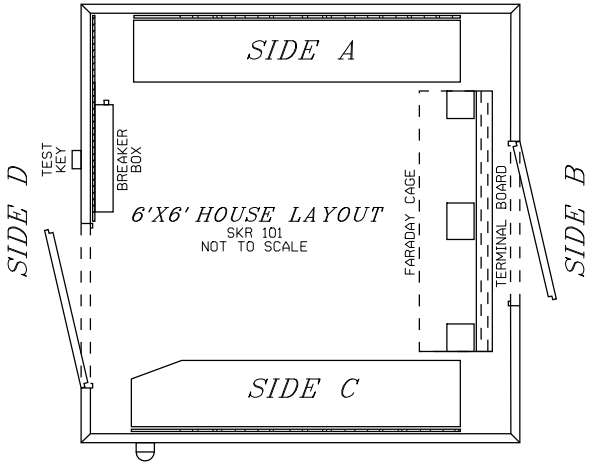

NOTE: INSTALL POWER OFF INDICATOR LIGHT ON TRACK SIDE NEAREST THE HIGHWAY AND NEAR EAVE OF HOUSE.

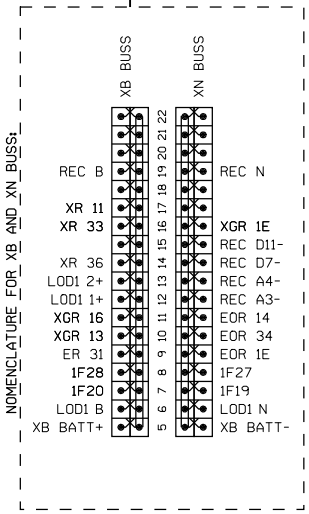

FARADAY CAGE LAYOUT NOTES:

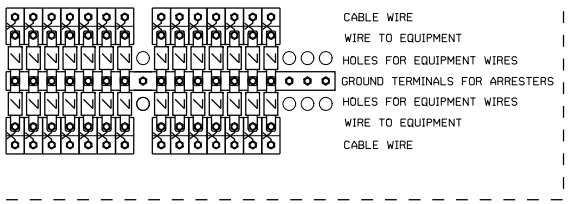

RELAY CROSS REFERENCE

GRS	SAFETRAN
A62-277	400004
A62-741	400005
A62-671	400700
A62-360	400200

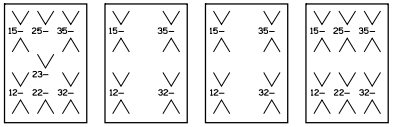

▼ = CONTACT USED

▽ = CONTACT NOT USED

ALL NEW

BURLINGTON NORTHERN SANTA FE RAILWAY

TERMINAL BOARD LAYOUT
TR 421 (LANCELOT) COLMAR, IL

DESIGNED 05-07-08
NEW XING MP 219.11
SSD/JRE SEQ.# 37135

LS 0011 | MP 219.11 | SH 07 OF 10

0011219_11x07c_.dgn May 7, 2008

Typ: 071307 Ch: Y

PLAN MUST NOT BE MODIFIED WITHOUT APPROVAL OF SIGNAL ENGINEERING

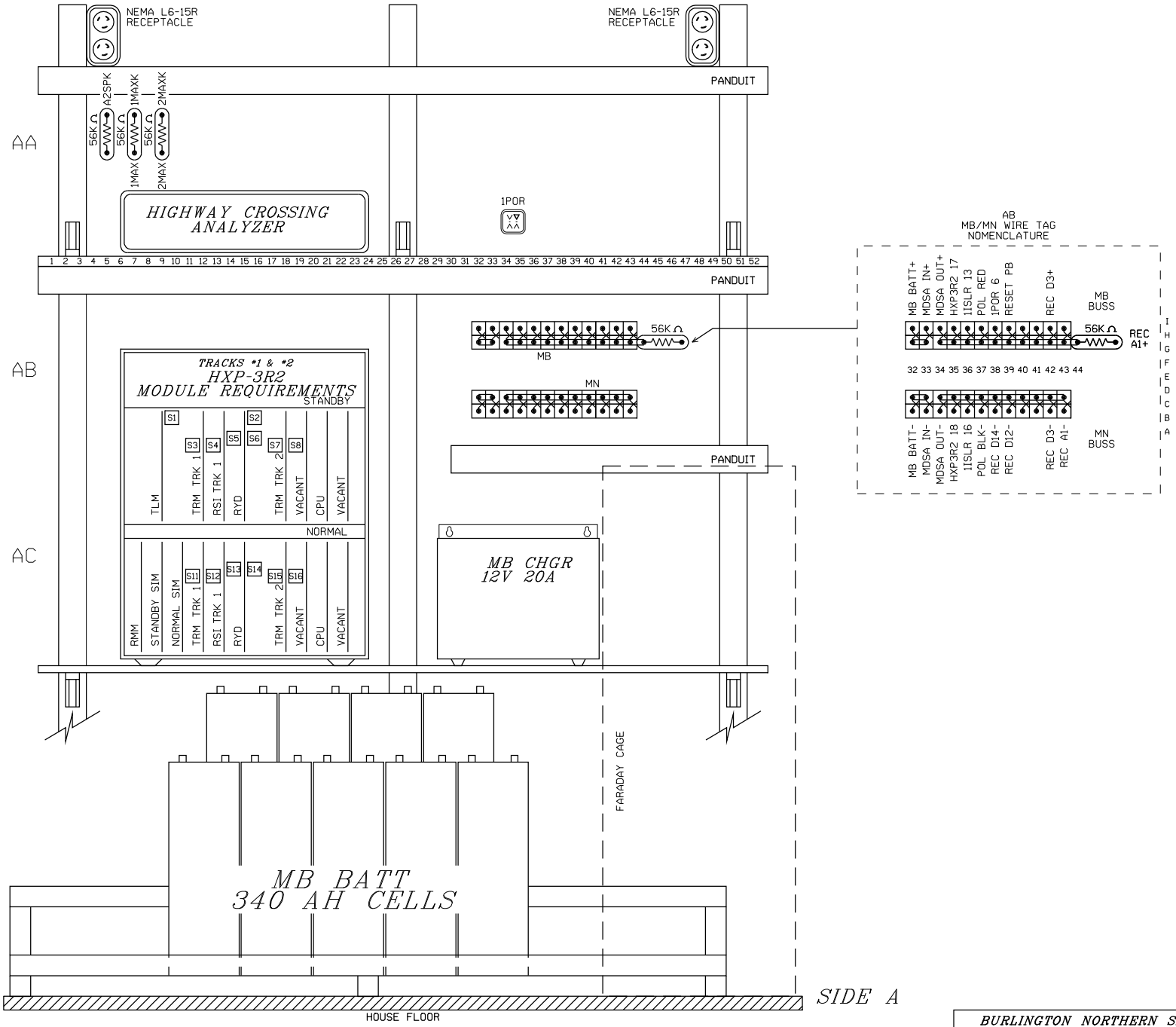

ALL NEW

BURLINGTON NORTHERN SANTA FE RAILWAY

SIDE "A" SHELF LAYOUT
TR 421 (LANCELOT) COLMAR, IL

DESIGNED 05-07-08
NEW XING MP 219.11
SSD/JRE SEQ.# 37135

LS 0011 | MP 219.11 | SH 08 OF 10

0011219_11x08c_.dgn May 7, 2008

PLAN MUST NOT BE MODIFIED WITHOUT APPROVAL OF SIGNAL ENGINEERING

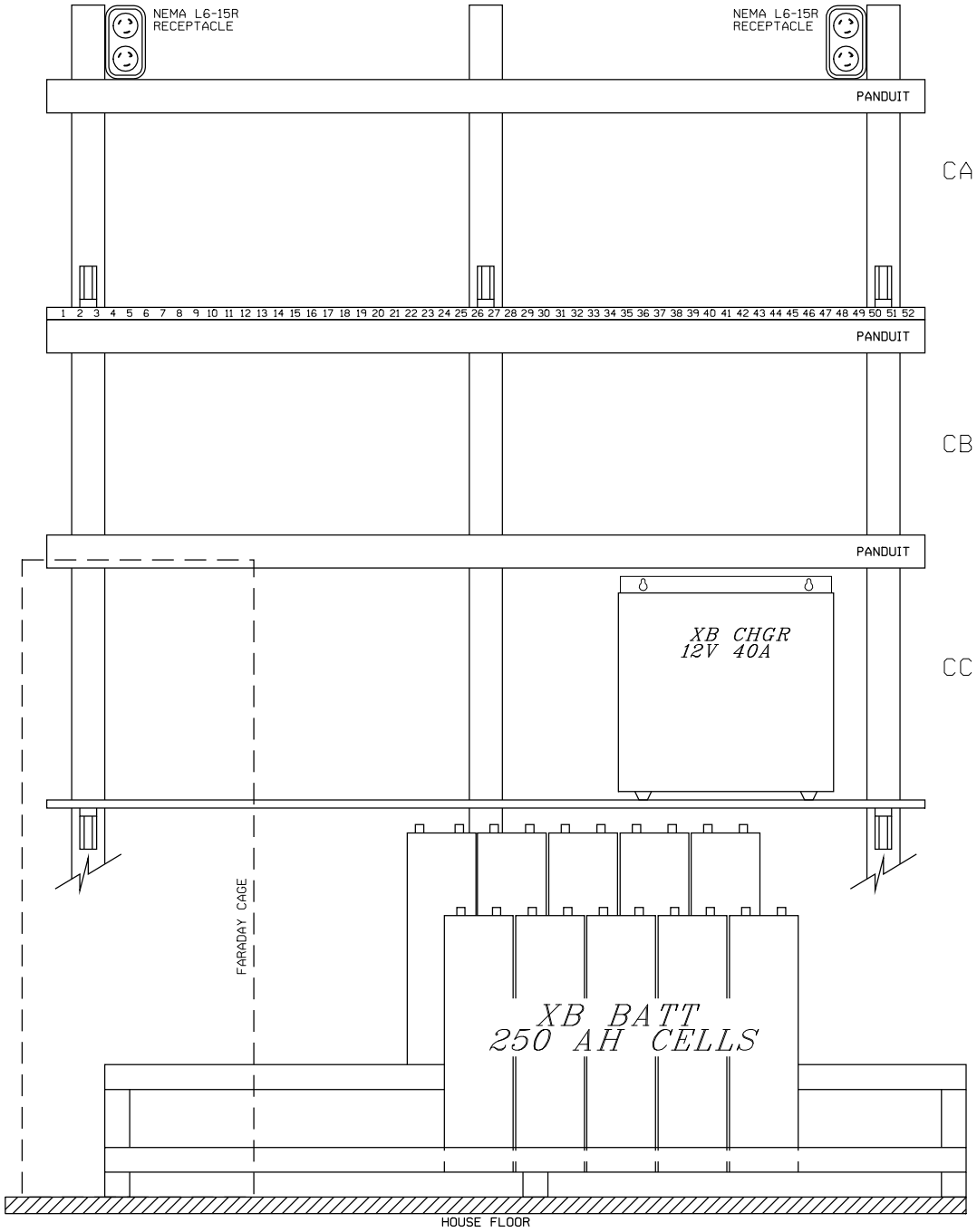

SIDE C

ALL NEW

BURLINGTON NORTHERN SANTA FE RAILWAY

SIDE "C" SHELF LAYOUT
TR 421 (LANCELOT) COLMAR, IL

DESIGNED 05-07-08
NEW XING MP 219.11
SSD/JRE SEQ.# 37135

LS 0011 | MP 219.11 | SH 09 OF 10

Typ: 062707 Ch: Y

PLAN MUST NOT BE MODIFIED WITHOUT APPROVAL OF SIGNAL ENGINEERING

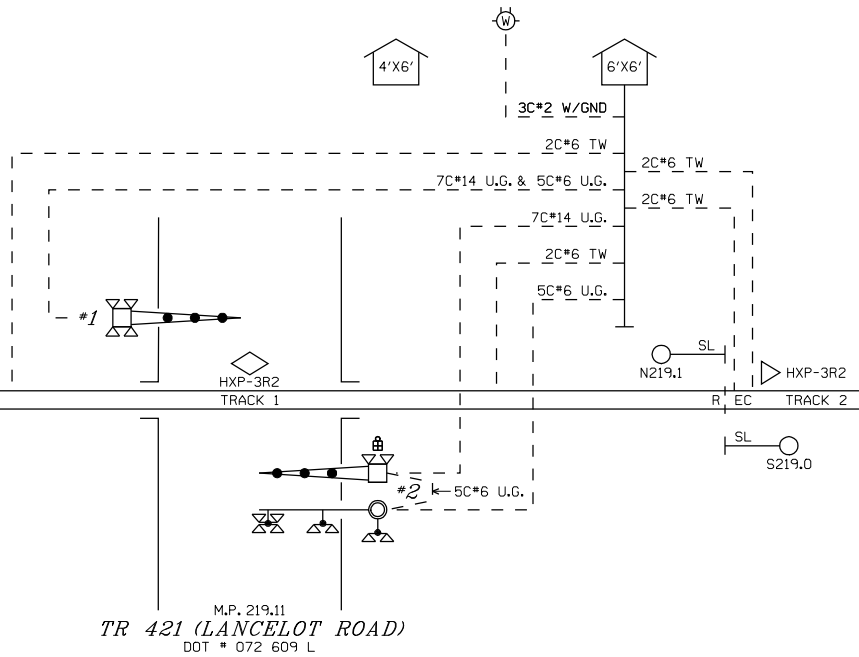

ALL NEW

BURLINGTON NORTHERN SANTA FE RAILWAY

CABLE LAYOUT
TR 421 (LANCELOT) COLMAR, IL

DESIGNED 05-07-08
NEW XING MP 219.11
SSD/JRE SEQ.# 37135

LS 0011 | MP 219.11 | SH 10 OF 10

0011219_11x10c_.dgn May 7, 2008

Completion of this form is necessary to accomplish the statutory purpose as outlined in the Illinois Public Utilities Act, chapter 111 2/3, Sec. 9. Failure to provide the requested information may prevent your request from being processed. This form has been approved by the Forms Management Center.

Form 3

STATE OF ILLINOIS
ILLINOIS COMMERCE COMMISSION

Petition for permission to make a major change in crossing protection, or to install new protection under 92 Illinois Administrative Code 1535.400 (d)

Date: **May 23, 2008**

To the Illinois Commerce Commission:

The petitioner **BNSF Railway** shows

(1) That it is a railroad company operating a line of railroad in the State of Illinois.

(2) That petitioner proposes and hereby makes application for authority to make a major change in crossing protection, or to install new protection, under 92 Illinois Administrative Code 1535.400 (d) adopted by this Commission.

(3) That the location of the crossing, the nature of protection now established and proposed to be established, and other pertinent facts in connection therewith, are set forth in the statement attached to and forming part of this petition.

(4) That petitioner's reasons and purpose, with reference to its said proposal are

Install Constant Warning and flashers with gates, 1 cantilever at TR 421 T08-0024

(5) That the facts set forth in this petition and in the statement and plans or plats attached thereto, are, all of them, true and correct to the best of petitioner's knowledge and belief.

WHEREFORE, the petitioner prays that the Commission will, if deemed desirable by the Commission, set the aforesaid matter for hearing, and that the Commission enter an order or adopt a resolution consenting to and granting authority for the making of the said proposed changes in or additions to crossing protection.

BNSF Railway

By

Daniel Dunn
General Construction Supervisor
309-345-6271

(Attorney for Petitioner)

(Use Enter key for up to four additional lines.)

(Attorney's Address)

Statement, attached to and part of an application for permission to make a major change in crossing protection or to install new protection, under 92 Ill. Adm. Code 1535.400(d).

1. Name of Railroad Company **BNSF Railway**

2. Crossing Number **072609L**

3. Village or City **Colmar**

4. Name of Street or Highway **TR421**

5. Public Agency Maintaining Highway **(D.O.T., County, Township, City)**

6. Protection now established: (Give full description. Indicate the hours of any manual protection.)

   Crossbucks

7. Protection desired: (Give details)

   Install Constant Warning and flashers with gates, 1 cantilever at TR 421 T08-0024

8. Number of main tracks **1** Other tracks **0**

9. Number of passenger train movements: 6 a.m. to 6 p.m. **3** 6 p.m. to 6 a.m. **1**

10. Number of freight train movements: 6 a.m. to 6 p.m. **11** 6 p.m. to 6 a.m. **11**

11. Approximate number of switch movements: 6 a.m. to 6 p.m. _____ 6 p.m. to 6 a.m. _____

12. Maximum speed of trains at crossing on each track in each direction

Track 1 N/E Bound	**79**	mph	S/W Bound	**79**	mph
Track 2 N/E Bound	**0**	mph	S/W Bound	**0**	mph
Track 3 N/E Bound	**0**	mph	S/W Bound	**0**	mph

13. Passenger platforms served by tracks within the limits of track circuits, if any **0**

14. Where automatic signals or gates are proposed, approximately number of train or engine movements daily which would cause false indications or operation _____

15. Nature and approximate amount of street or highway traffic over crossing
250 AADT

16. In addition to the information listed hereinbefore in Form 3, attach a track plan or plat of the proposed crossing. This plan should show:

(a) Width and surface of highway.
(b) Highway intersections (including private driveways to be so indicated) and location of established highway signs or signals within 100 feet of crossing.
(c) Location of tracks, switches and other railroad facilities such as block signals, etc. within limits of track circuits, present and/or proposed.
(d) Where automatic protection is proposed, show proposed location of signals (sidelights, cantilevers, etc., if any).
(e) Show the length of each operation track section within the control limits of the crossing protection and its function.

ADDITIONAL INFORMATION

VERIFICATION

I, **(Daniel Dunn**, first being duly sworn upon oath depose and say that I am **General Construction Supervisor** of **BNSF Railway**, an **Deleware** corporation; that I have read the above and foregoing petition by me subscribed and know the contents thereof; that said contents are true in substance and in fact, except as to those matters stated upon information and belief, and as to those, I believe same to be true.

Daniel Dunn
General Construction Supervisor