Kinectrics/Samtech Analysis of ComEd Cross Arm Failures during the August 23, 2007 Storm System

1 Introduction

On August 23, 2007, a strong storm system (**Storm)** hit the operating area of Commonwealth Edison Company (**ComEd**) in the State of Illinois. As a consequence, numerous power distribution assets of ComEd were damaged, resulting in several thousand discrete interruptions, of which about 79 individual interruptions associated with cross arms were reported.

This report analyzes the detailed information on the cross-arms that failed during the Storm, together with the weather conditions these cross-arms experienced. The goal of the study is to determine whether the failures on the cross-arms during the Storm were due to unpredictable natural forces that were beyond the standard and accepted design criteria of such assets. In particular:

- An analysis is performed to calculate the wind load that the conductors would have experienced during the Storm. The conductor wind load is also calculated at the locations where the cross arm failures occurred and wind data was available. The comparison of wind load on the conductors during the Storm to the design conductor load will show whether the design conductor load was exceeded during the Storm. Analysis of the effect of wind load on the structure and conductor during the storm will show whether the design capacity of the pole was exceeded.

- The extent of damage to poles and cross arms that can be caused by foreign objects such as falling trees and limbs striking the poles, cross arms, and/or conductors is investigated.

- The results of a sample inspection of ComEd cross-arms, using criteria specified by Kinectrics/Samtech, are presented.

- The question of whether the cross arms are strong enough to withstand the impact due to strong winds and falling trees is also investigated.

2 Background on ComEd Wood Poles and Cross Arms

ComEd's distribution power system is designed and constructed in conformation to ComEd Construction Standards, which are based on accepted national and international standards including the National Electric Safety Code ("NESC"), American National Standards Institutes ("ANSI") standards, IEEE standards, and Illinois Commerce Commission rules.

The NESC [2002 Edition Part 2] provides specific standards to design wood poles and cross arms against the loads due to wind, ice and combined wind and ice.

According to the NESC, northern Illinois falls into what is called the "heavy" loading area. [NESC 2002 Edition Part 2 Section 25 Fig 250-1] In this zone, the NESC requires that poles shorter than 60 feet effective height (distance from the ground to the conductors) should be able to withstand a transverse load of (1/2 inch ice + 4 psf wind)[1] [NESC 2002 Edition Part 2 Section 25 Table 250-1]. The poles that are higher than 60 feet should also withstand extreme summer wind loading of 90 mph (3-second gust) on the structure and conductors. [2] [NESC 2002 Edition Part 2 Section 25 Fig 250-2(b)]

.

[1] Hereafter the wind speeds used in the report will be in 3-second gust. Wherever necessary, the 5-sec gust will be converted to 3-sec gust. (ASCE Standard ASCE/SEI 7-05, Minimum Design Loads for Buildings and Other Structures, page 308)

[2] In the 2002 NESC, a new provision was added requiring new wood structures to be able withstand the extreme wind of 90 mph (3 second gust) without conductors, regardless of their heights. However, because the ComEd distribution system assets under consideration were almost exclusively built before 2002, those new code provisions are not applicable. Furthermore, the poles analyzed in this report are shorter than 60 feet. Based on the pre-2002 NESC, these poles did not require the application of the 90mph extreme wind to the structures.

3 August 23, 2007 Storm and Affected ComEd Cross Arms

During the Storm a number of cross arms failed across the area affected by it. The reasons for the failure of the cross arms are analyzed below. The wind load calculations are done in two parts.

- In the first part (Section 3.1), only the wind loads corresponding to various wind speeds are calculated and compared with the design load of (1/2 inch ice + 4 psf wind). The effect of age on pole strength or the overload factor is not considered.

- In the second part (Section 3.2), the effects of wind loads on poles are assessed, considering the overload factor and the effect of reduced pole strength due to aging.

3.1 Conductor Wind Load during the Storm vs. Design Conductor Wind Load

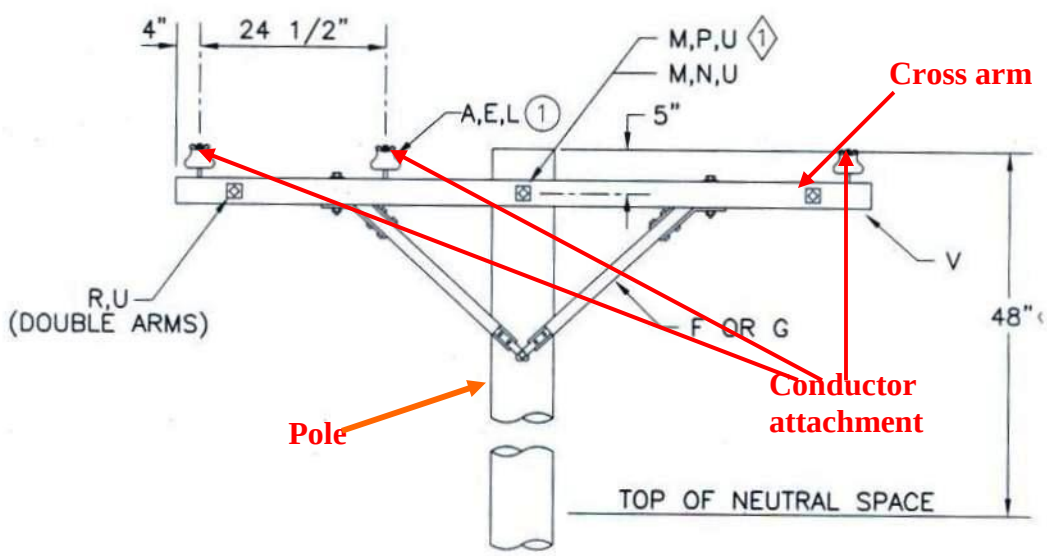

Figure 1: An Example of a Horizontal Single Circuit Line Pole of ComEd

Figure 1 shows an example structural configuration of a wood pole used in ComEd design standard. The line sketch shows the framing at the top, including cross arms, cross-arm bracing, and conductor attachment points.

On August 23, 2007, the 5-second wind gust in many areas of ComEd's system ranged between 80 mph and 100 mph.[3] These high winds would have imposed an enormous amount of

3 National Climate data Centre: http://www.ncdc.noaa.gov/oa/climate/severeweather/extremes.html

transverse load[4] on the distribution conductors, poles, and the cross arms. It will be useful to look at the magnitude of these conductor wind loads and to compare them to the conductor wind loads used to design these lines.

The actual level of transverse conductor load can be calculated by employing a formula accepted in power system engineering and referenced in the NESC.[5] That formula is:

$$\textbf{Transverse wind load} = 0.00256*(V^2)*K*G*I*CD*L*d \quad \textbf{(lbs)}$$

Where,
- V = wind speed in mph (3second gust speed)
- K = Velocity pressure exposure coefficient
- G = Gust response factor
- I = Importance factor
- CD = Shape factor
- L = Span length (ft)
- d = Conductor diameter (ft)

The meaning of the factors used in the wind load calculations are explained below.

K = factor that takes into account the change in wind speed with height
G = factor used to consider the extent to which the conductor span is exposed to the wind
I = factor used to underscore the importance of the line being designed
CD = factor representing the value of conductor drag to wind flow

For this analysis, we used K = 1.1, G = 0.88, I = 1, L = 1 ft, d= 0.8 inch & CD =1. These parameters are appropriate for the type of conductor used by ComEd and the conditions experienced. We applied the formula to speed values (V) of 40, 50, 60, 70, 80, 90 & 100 mph to calculate the corresponding wind loads on conductor. The conductor wind loads are listed in Table 1 and plotted against the corresponding wind speeds in Figure 2.

Table 1: Wind Speed vs. Wind Load

Wind speed (mph)	Wind load (lbs/ft)	Ratio *
40	0.26	0.44
50	0.41	0.69
60	0.59	0.99
70	0.81	1.35
80	1.06	1.76
85	1.20	2.00
90	1.34	2.23
100	1.65	2.75

*** wind load/wind load due to (1/2 in + 4 psf)**

4 The transverse (horizontal) wind load is applied perpendicular to the conductor, which in turn is transferred to the poles via cross arms.

5 NESC 2002 Edition Part 2 Section 25 Rule 250C

ComEd lines are located at the NESC heavy loading area and therefore, the design values used are 4 psf wind superimposed on a conductor covered with ½ inch radial ice. This type of transverse load is called wind-on-ice load. Applying the above wind pressure equation, the wind-on-ice load is calculated to be 0.6 lbs/ft. A comparison of the loads is provided in Figure 2.

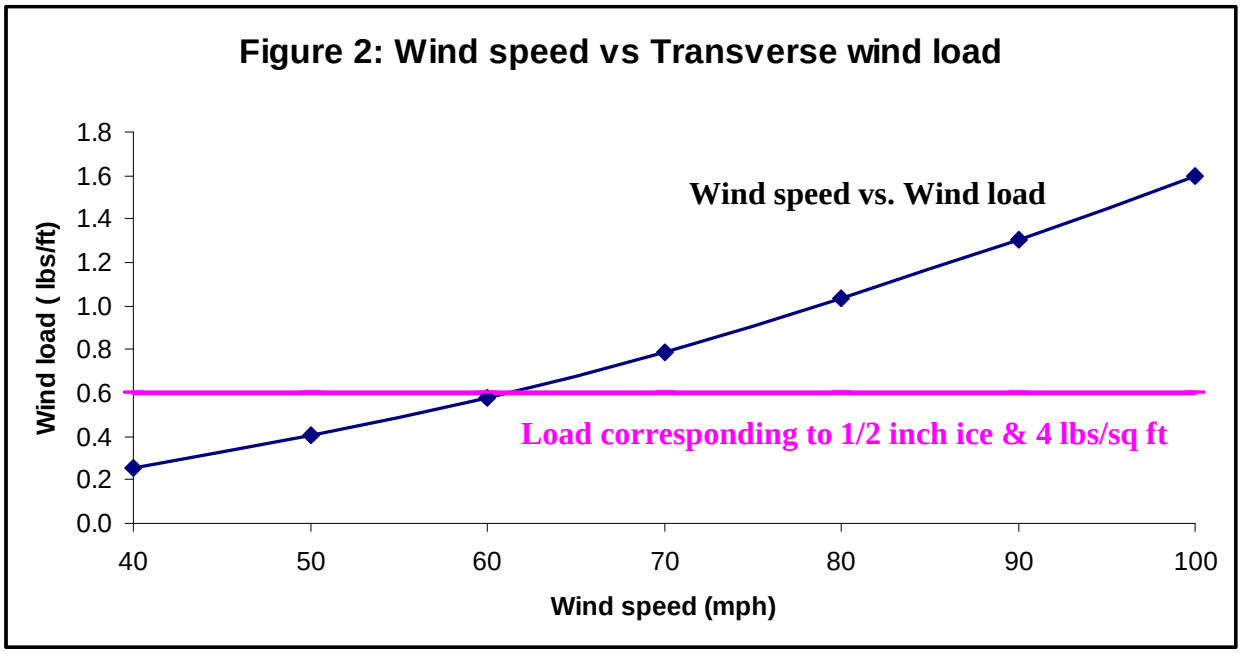

Figure 2: Wind speed vs. Conductor Wind Load

Figure 2 and Table 1 show that the transverse wind load on conductors exceed the design wind load on conductor at wind speeds about 60 mph and above. At about 90 mph, the increase in the wind load was more than twice the design conductor wind load.

3.2 Conductor Wind Loads Considering Overload Factor and Pole Age

It is important to consider the withstand capacity of poles to wind levels during the storm, as pole failure could lead to cross-arm failure by several mechanisms.

New poles are designed to withstand a transverse load of (½ inch ice and 4 psf wind), which in ComEd's case corresponds to a 60 mph wind with no ice. However, because strength is reduced over time, poles will support a transverse load less than the original design load. However, this reduction is strength over a pole's life cycle, which is modest and expected, is taken into account in the standards. In the information shown in Table 2, the strength reduction together with overload factor are taken into consideration in calculating the wind loads corresponding to the winds that prevailed at various locations on August 23, 2007.[6] Based on these results it is

[6] It should be emphasized that the industry practice is to reconsider the capacity of a pole only when its strength is reduced by about 35%. We believe, based on our experience and the extensive database of Samtech Inc., that the strength of pine poles in service for 30–35 years remains considerably above that level

important to note that the poles and arms failed not because of inadequate capacity as Mr. Lanzolotta claims, but because of excessive wind loads.

The strength of poles or its withstanding capacity is reduced as it ages. The affected distribution system during the August 23, 2007 storm has been in service over 30-35 years. Therefore it is essential to consider how the reduction in pole strength would have played a role during the Storm.

Information from the extensive database of Samtech Inc. was utilized to assess the strength of aged poles. The measured strength values of 385 pine poles that have been in service for 30–35 years were used to evaluate the average strength reduction. The analysis shows that the pole strength can be reduced by **an average of 18%.** However, it should be emphasized that the industry practice is to reconsider the capacity of a pole only when its strength is reduced by about 35%. Therefore a strength reduction of 18% does affect very little the ability of the poles to carry the design loads.

The calculated wind loads are then applied to a single circuit, class 2 pole structure with a span length of 200 ft, height of 35 ft above the ground and 12 inch in diameter at the ground line. Two application cases are considered:

- In Case 1, the overload factor and pole strength reduction are considered in the calculations
- In Case 2, the overload factor is considered but the pole strength change is not taken into account

Table 2: Effect of Strong Wind Speeds during August 23, 2007 Storm

Number of failure locations	Wind Speed (3sec gust) (mph)	Wind Load (lbs/ft)	Wind Load on Pole Structure	
			Case 1 Ratio *	Case 2 Ratio **
4	62	0.63	0.85	0.70
2	65	0.70	0.94	0.77
4	70	0.81	1.10	0.90
8	71	0.83	1.13	0.93
1	72	0.86	1.16	0.95
3	76	0.96	1.30	1.06
22	78	1.01	1.36	1.11
4	82	1.12	1.52	1.24
2	93	1.42	1.92	1.57
18	Tornado	Not calculated	Not calculated	Not calculated

***Ratio: {wind effect} / {effect due to (1/2 inch ice + 4lbs/sqft wind load), considering pole strength reduction and overload }**
****Ratio: {wind effect} / {effect due to (1/2 inch ice + 4lbs/sqft wind load), considering overload, but not considering pole strength reduction}**

It can be seen from Table 2 that in these applications, the withstanding capacity of the pole was exceeded at wind speeds from 70 mph to 75 mph.

This evidence clearly shows that the major factor in the failure of poles and cross arms is the excessive wind speeds that occurred during the Storm. It would have been difficult for ComEd to design for wind speeds of such magnitude and would not have been possible for ComEd to do so without designing to a standard that greatly exceeded that accepted in the industry and specified in the NESC.

3.3 Damage due to Foreign Objects

During severe wind storms, the impact of foreign objects such as falling trees or any other flying debris on distribution lines is very significant, especially when the accompanying wind speeds are relatively high. An example shown in Figure 3 illustrates how poles or cross arms can fail due to falling trees and limbs, even when the tree or limb does not directly strike the pole or cross arm.

It is not accepted practice to design distribution line components to withstand the impact of foreign objects of significant size hitting the lines. Nor would it be reasonable, given the magnitude of the forces that such impacts can generate. Limbs and trees do not generally fall of their own accord. Rather, factors such as high winds can uproot trees and sever branches. In the case of the Storm, it is reasonable to conclude that the major factor causing the failure of cross arms and poles due to such foreign object damage was the high winds.

Figure 3: An Example of Cross Am Damage due to Falling Tree

3.4 Aging of Cross Arms

Peter J. Lanzalotta claims in his direct testimony that "wooden cross arms typically have an effective service life of from 25 to 35 years, depending on conditions" (Lines 192-93). He cites no authority for this claim. While it is certainly true that some cross arms may need replacement or repair during this time frame, 25 to 35 years is not representative of the effective life of cross arms in the ComEd territory.[7]

ComEd's experience with its wood poles verifies this conclusion. In a given service territory, cross arms should last longer than wood poles with like treatment. (Historically, poles and cross arms used by ComEd are treated the same way. Moreover, the cross arms are predrilled before

7 We note that Mr. Lanzalotta states that "[a]s they get older, [cross arms] tend to get less resilient and more brittle …." (Lines 193-94). Cross arms may experience failure or deteriorate, but the concept of "brittleness" is not generally used with respect to wood structures. It is a concept used with respect to metallic materials that are, for example, subject to fatigue.

treatment to reduce rotting at the connection points and improve performance.) The main reason for the longer life of cross arms is that they don't have contact with the ground as the poles do. The probability of poles degrading at the ground level is considerably higher than they are at above ground levels. At the ground level, the right combination of cyclic moisture and temperature conditions exists for degradation to initiate and grow.

The loading is chosen so that a pole will have a life time of 50 years. Cross arms can be expected to have at least that expected design life. In reality, many poles last longer than the designed life, in some cases up to 75 or 80 years (Figure 4)[8]. Likewise, cross arms that remain in satisfactory condition can have a useful life much longer than their expected design life. In this regard, it is also instructive that average circuit age of the lines that failed during the Storm is between 30 and 40 years, and there were many cross arms that were older than that did not fail. It is clear that the failed cross arms were by no means older assets.

Based on Samtech's 20 years of experience with pole inspection and contact with a number of utilities, it is our opinion that the cross arms are not routinely replaced every 25-30 years unless they are damaged. In sum, any implication in Mr. Lanzalotta's testimony that cross arms of over 25-35 years of age must be replaced or that the continued use of such cross arms is improper and also is not supported by ComEd's actual experience. There is no basis to conclude that ComEd should automatically replace all or most cross arms after 25-35 years, or that ComEd's use of older cross arms caused or lengthened interruptions during the Storm.

[8] **In our opinion, the pole age distribution of ComEd poles conforms to other pole age distributions.**

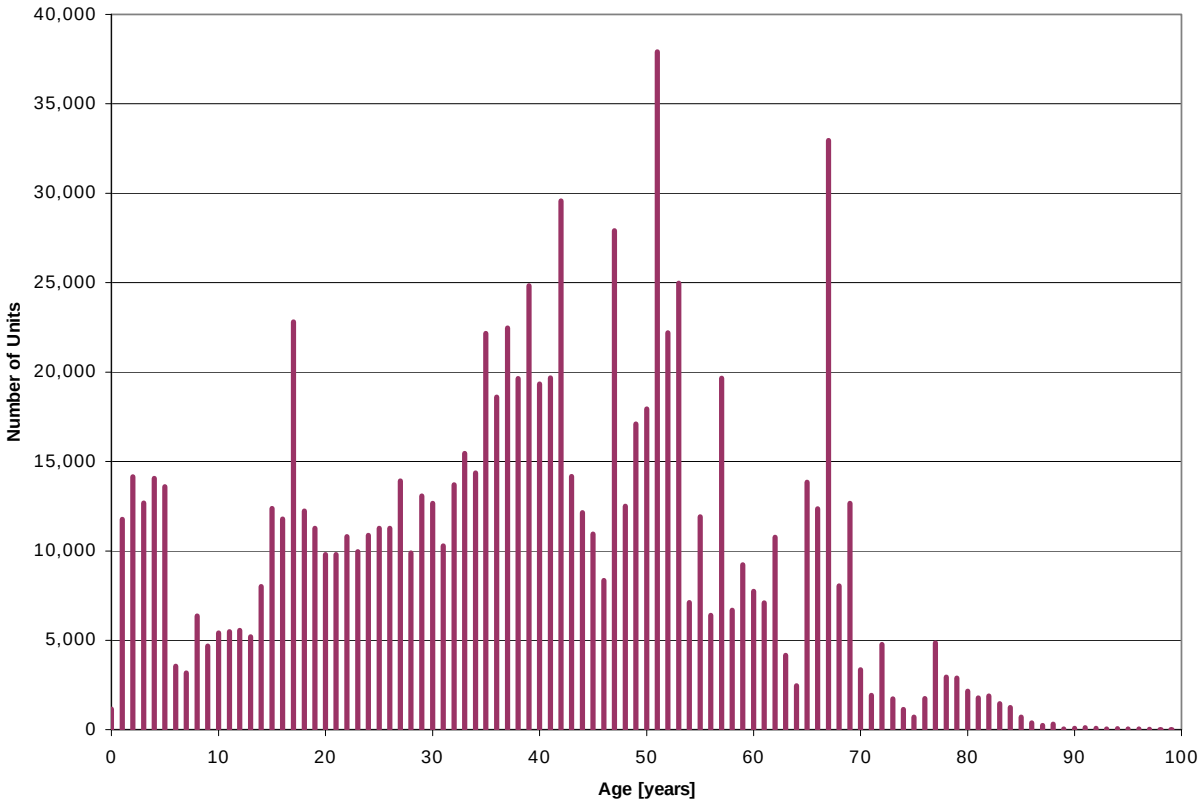

Figure 4: Age distribution of wood poles

3.5 Locations of Failed Cross Arms vs. Storm Activity

From ComEd's outage records during the period 23 August 2007 to 26 August 2007, there are in total 79 outage segments that were associated with the failure of cross arms or cross arm braces. The large majority of these failures occurred, as would be expected, in locations with the most pervasive and significant incidence of wind in excess of design standards, and not in the areas where ComEd's system is, on average, the oldest. For example, more than half of the failed cross arms/arm braces/alley arms were found in the two areas where the very strongest storm activity occurred.

3.6 Inspection Processes for Poles and Cross Arms

ComEd employs regular maintenance and inspection programs for its wood poles and cross arms. ComEd performs a routine visual inspection on lines (including poles and cross arms) every 2 or 4 years depending on voltage class. A dedicated inspection of distribution poles is also carried out as per NESC at intervals as experience has shown to be necessary. In our opinion, the methods employed in the inspection process are well established and used across the power industry. It is not correct to imply that poles or cross arms failed due to lack of maintenance.

4 Visual Inspection Survey of Cross Arms

As part of our analysis, a visual inspection of a sample of cross arms was conducted in two areas in the west and northeast area of ComEd's service territory that were in the path of the intense winds during the August 23, 2007 storm (Figure 5). The inspection protocol was specified by Kinectrics/Samtech. About 80 cross arms were inspected in both locations. The purpose of the inspection is to asses the condition of the cross arms to obtain relevant information on the current status.

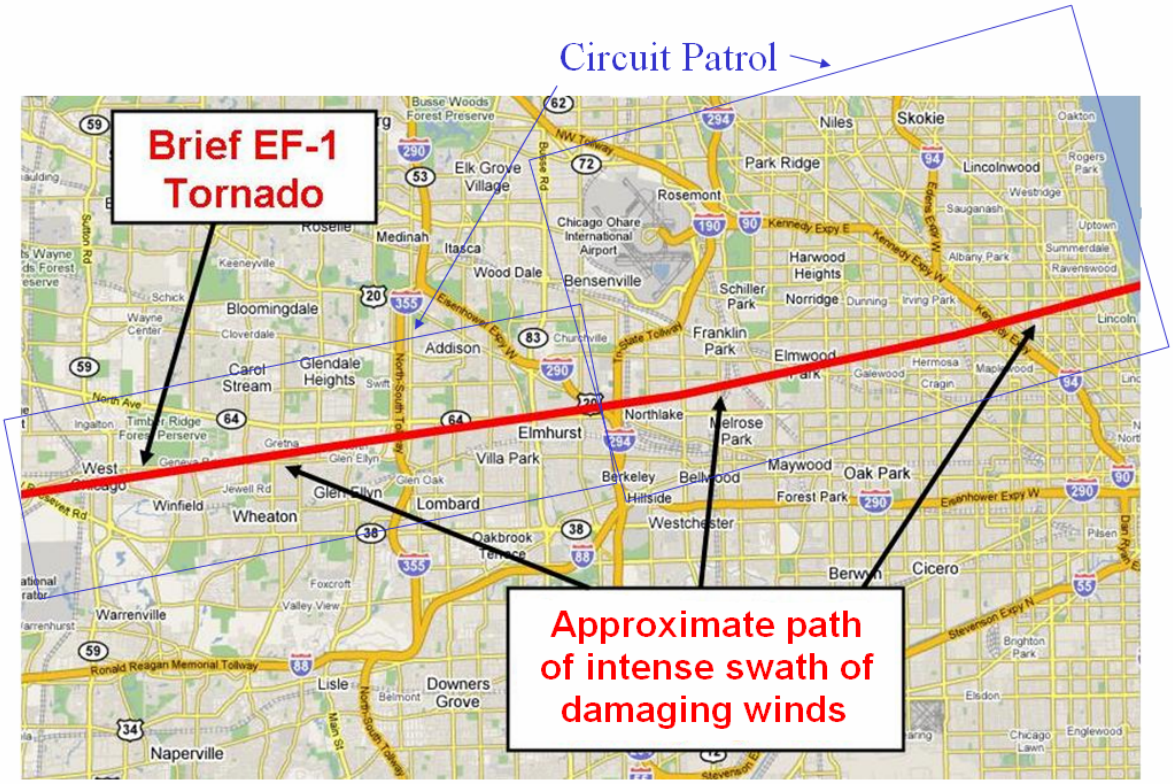

Figure 5: A Map of the Area Subjected to Intense Wind on August 23, 2007

The following is a list of data gathered to assess the condition of cross arms:

- rot
- cracks
- fire damage
- rot at bolt holes
- damage to cross arm connection
- carpenter ants damage
- wood pecker damage
- moss or vegetation on cross arm
- cross arm misalignment

In addition, the inspection form allowed any other relevant information that was observed to be recorded.

Analysis of the data gathered shows that an overwhelming majority of the cross arms are in good condition. None were classified as requiring replacement, or were found in a condition that would indicate that they were unable to perform to design standards during a storm. Some example pictures of cross arms inspected are shown in Figures 6 and 7.

Figure 6: An Example Cross Arm Inspected in Northeastern Area

Figure 7: An Example Cross Arm Inspected in Western Area

5 Conclusions

- The analysis of the wind speeds during the Storm clearly shows that the strong wind was the major factor in the failure of poles and cross arms. It would have been difficult for ComEd to design for wind speeds of such magnitude. It is also highly probable that in many cases the cross arms could have been damaged by falling trees and tree limbs. ComEd could not have prevented this damage without designing a system that far exceeded realistic and accepted design standards.

- ComEd's cross arms are not inappropriately aged. The design life of poles and cross arms are about the same – in excess of 50 years – because, in the majority of situations, they are subjected to same chemical treatment before installation. Also, cross arm holes are drilled prior to the treatment to avoid any rotting at the connecting points to the pole. Indeed, the expected life of cross arms should be higher than that of the poles because the pole is in contact with the ground while the cross arm is not. At the ground level, the pole is subjected to cyclic variation of moisture and temperature, which is an ideal condition for degradation to initiate and grow.

- The field inspection of cross arms at two selected locations shows that the overwhelming majority of the arms are in a good condition. The inspection showed that none needed replacement. Moreover, failed cross arms were by no means concentrated in areas with older assets. There is no basis to conclude that ComEd systematically uses cross arms that do not meet design standards or that are too "aged" to perform appropriately.

- The damage experienced by ComEd during the Storm was a function of the Storm's intensity and scope. There is no indication that the ComEd interruptions caused by the Storm resulted from ComEd failing to properly maintain, inspect, or replace its assets as required, or that the damage could have been prevented by earlier replacement of cross arms.

Stephen L. Cress, BASc, P. Eng.

800 Kipling Avenue
Toronto, Ontario, Canada
M8Z 6C4
416-207-6557
stephen.cress@kinectrics.com

KINECTRICS

Stephen Cress is currently the Manager of Distribution Asset Management in the T&D Business of Kinectrics Inc. (formerly Ontario Hydro Research Division).

Mr. Cress is a recognized Distribution Power System expert and has over 30 years experience in technical investigations, application, analyses, standard development, standard and qualification testing, and research associated with distribution systems and equipment.

He has conducted major investigations for North American transmission and distribution utilities dealing with: asset management, asset condition assessment, equipment life assessment and life extension, equipment application, planning studies such as capital efficiency and asset utilization, arc modeling and hazard analysis, distribution system protection, (reclosers, sectionalizers, breakers, relays, electronic fuses, network protectors), power system failure analysis and forensic investigations (transformers, switchgear, fuses, transformers, capacitors), Standards testing, distribution system loss evaluation and mitigation, distribution power transformer loading and sizing, distribution modeling (load flows, loss analysis, protection coordination, ferroresonance), application of probabilistic methods to distribution design and operation, development of utility-oriented engineering software, distribution monitoring, SCADA and automation.

Stephen Cress specializes in the areas asset management, overcurrent protection and arc hazard analysis. He is the holder of a US patent on high voltage current limiting fuses. He is co-author of a published reference book “Application Guide for Distribution Fuses”. He has acted as a utility witness for manufacturer standard testing of distribution fuses, capacitors and regulators. Mr. Cress has participated in standards development, and conducted qualification tests of manufactured distribution apparatus for utilities.

Stephen Cress is the co-developer of the commercially available ARCPRO™ computer program that has become a standard in North America for conducting the US OSHA mandated hazard assessment to select clothing for workers who may be exposed to electric arcs. His work in the development of probabilistic methods for calculating transformer loss evaluation, loss-of-life and loading, have been incorporated in the commercially available Canadian Electrical Association TRANSIZE™ computer program. He has published papers with international organizations such as IEEE, CIRED, and INTER-RAM, and articles in power industry magazines.

Stephen Cress has extensive experience and education in Project Management. He has been project leader on over 20 Canadian Electrical Association and Ontario Municipal Electric Association research and

development projects. He was Project Leader for the Kinectrics' Asset Management Projects at Powerstream, Toronto Hydro, Horizon Utilities Oshawa Hydro and Exelon.

Expertise

- *Power System Asset Management*
- *Asset Condition Assessment and Life Extension*
- *Power System Failure and Forensic Investigations*
- *Arc Hazard Assessment*
- *Power System Protection*
- *Distribution System Fusing*
- *Standard and Qualification Testing and Witness*
- *Standard Development*
- *Power System Analysis*
- *Power System Loss Mitigation*
- *Distribution Equipment Application*
- *Distribution System Planning*
- *New Product Development*
- *Distribution Automation, SCADA and Monitoring*
- *Engineering Software Design*
- *High Voltage and High Current Electrical Testing*

Education

B.A. Sc. in Electrical Engineering, University of Toronto 1976

Additional Training

"Negotiation Skills Training" – Stitt Feld Handy Group, 2008
"Instructional Techniques" – Friesen, Kaye and Associates – April 2008
"Enhancing Client Relationships" – Reflective Keynotes Inc, November 2007
Rotman School of Management, U of Toronto – "Managing a Professional Services Business" - 2000
Rotman School of Management – "Management Accounting & Control" - 2000
OHSC – "Electrical Safety Awareness" – 1999, updated 2005
Creative Training Excellence Inc. – "Managing Contracts" - 1999
Dr. P. Strahlendorf – „Due Diligence" - 1996
Management Technology Institute – "Effective Technology Transfer" - 1980
T&D\IEEE – "Computerized T&D Analysis" - 1980
T&D\IEEE – "Distribution System Loss Reduction" - 1980
T&D\IEEE – "Distribution System Load Management" – 1980
T&D\IEEE – "Capacitor Application & Control" - 1979
Power Technologies Institute – "Power Circuit Analysis I&II" - 1979
Ontario Hydro Training Services – "Analysis of Sampling Experiments" – 1979

Professional Affiliations

Registered Professional Engineer, Province of Ontario
Canadian Chairman of IEC/SCC SC32A and CSA C254 Committees for Standards on High Voltage Fuses.
Canadian Representative and Specialist on the International IEC SC32A Working Groups on High Voltage Expulsion Fuses
Past Member of the MEA Distribution Research and Development Committee.
Past Member of the CEA Distribution Research and Development Committee.
Past Chairman of the OHRD Research Panel on Distribution Systems
Past Canadian Liaison with the IEEE Switchgear Committee / High Voltage Fuse Subcommittee.
Past Member of the CSA Engineering Standards Steering Committee.

Details of Employment

2006 – Present, Manager- Distribution and Transmission Asset Management

2000 – 2006. Principal Engineer & Distribution Practice Leader – MP6. Project Leader & Principal Investigator

1999 – 2000. Ontario Hydro Services Co. Project Manager (on Contract) DNAM Strategic Planning. Manage Installation of SCADA Demonstration System in Barrie area.

1994 - 2000. OHT & OPT. Principal Research Engineer – MP6 Electrical Systems Technologies. Project Leader and Principal Investigator

1978 - 94. Ontario Hydro Research Division. Sr. Engineer – MP2-MP5 – Electrical Research, Electrical Testing & Development. Laboratory & Field Testing, Equipment Failure Investigation, Experimental & Theoretical Research Studies, Computer Modeling, Equipment Development, Reporting & Presentations.

1976 – 78. Ontario Hydro. Engineer – Training.
North Bay – Operations. Engineering & Economic Study of Automating Crystal Falls GS
Richview – P&C. Implementation of Relay Scheme Modifications
Kingston – Lennox GS. Design & Install Modifications to Plant Electrical System
Transmission Design. Modify Probabilistic Swing Bus Tension Program
System Planning. Develop Novel Reliability Analysis for Transmission Stations.

1975 – 76. Federal Pioneer. Engineer. Testing and Cost Estimation of HV Switchgear

1972 – 75. Multitone Electronics. Technician. Repair & Installation of Communication Equipment.

Power System Expertise

Broad knowledge of distribution system analysis, design, operation, and component performance

Conducted major investigations dealing with overcurrent protection, fusing

application, transformer life, effects of lightning on distribution systems, distribution power line carrier, cable ampacity, distribution automation, grounding connectors and capacitor applications. Results of this work have been the basis for Ontario Hydro Standards and provided guidance to enable distribution designers to increase reliability and safety, and to reduce costs.

Responsible for innovations such as the use of probabilistic analysis in distribution system design and operation, and use of leading edge new technologies such as expert systems and utility-oriented design software.

Conducted investigations on: evaluating distribution overcurrent surge environment, evaluating asset utilization, loss identification and prioritization, the effects of lighting surges on power systems, and the reliability of distribution system grounding connectors.

Power Equipment Expertise

30 years experience in development, testing and application of distribution system components including major investigations on: HV fuses, overcurrent protective devices, transformers, cables, meter bases, grounding connectors, HV switches, and capacitors,

Internationally recognized expert in distribution expulsion and current limiting fuses.

Conducted CEA, MEA and other external and internal investigations dealing with fuses, transformers, switches, capacitors, and network protectors.

Author of 5 IEEE and International Conference Papers on Distribution apparatus and systems.

Consultant on Application, Maintenance & Equipment Failure

Provided consulting and specialized testing services to clients on the application, maintenance and operation of HV fuses, transformers (loading and losses) and capacitors,

Conducted failure investigations on incidents involving personal and equipment losses – documented findings resulted in changes in equipment design and operating practices eg. Dry-well canisters replaced with under-oil fuses, minimum fuse sizes increased, purchasing practices revised.

Mr. Cress has prepared responses to intervener questions associated with utility regulatory rate hearings and has provided written responses in an insurance case involving a power utility.

Conducted DEFACs failure investigations on transformers, fuses, switchgear, etc.

Principal author of the CEA “Fuse Application Guide”

High Voltage, High Current & Other Electrical Testing Expertise

Extensive experience in High Current Testing including the design, instrumentation, and data analysis, including:

- Full-scale explosion testing of oil-filled pad-mounted transformer,
- Combined long duration/low current and short duration/fault current testing,
- Canister fusing explosion testing with pressure measurements during faults,
- Cadmium fuse failure investigations with air sampling measurements,

- Meter base failures mode testing using an remote manipulator arm,
- Specialized and high risk test programs such as paralleling the HC supply and impulse generator and non-routine 12kA/17kV HC supply,
- Novel electrical tests involving the coincident monitoring of contamination,
- Solar radiation, wind speed, and contained pressures.

Expertise in operating, programming and data analysis from digital and computerized instrumentation.

Experience in High Voltage Testing, including the following notable programs:

- Planning and direction of current limiting fuse current pulsing tests, which involved sophisticated paralleling of the impulse generator and the HC 60-Hz supply.
- 60 Hz HV testing of switchgear at Federal Pioneer
- Set-up of the impulse generator

Project Management Experience

- Project Manager for Kinectrics major Asset Management Projects with teams of up to 10 Engineers
- Project Manager for OHSC distribution monitoring demonstration system installation
- Project Leader or Principal Investigator for 20 successfully completed and published CEA projects (contract value over $5 million)
- Project leader of numerous projects involving Engineers and technologists from a variety of Departments and sub-Contractors
- Work supervision, job definition, training and direction of technologist staff
- Considerable experience in planning, organizing and assigning work responsibilities for numerous, research contracts
- Expertise in identifying research needs and formulating research projects on a wide variety of subjects

List of Major Projects

- Asset Management and Condition Assessment (THESL, Oshawa PUC, Exelon, Powerstream, etc)
- Distribution Monitoring and Smart Distribution
- Fuse Application Guide for Distribution Systems (CEA/OH)
- Economic Loading of Distribution Transformers Using Probabilistic Methods (CEA/MEA/OH)
- Distribution Equipment Failure Investigations (Transformers, Fuses, Capacitors, Switches, etc) (numerous North American Utilities)
- Standards and Qualification Testing (fuses, capacitors, transformers)
- Probabilistic Design of Fuse Coordination Bandwidths (CEA/MEA)
- Design of a Non-Venting Current Limiting Fuse (MEA/OH)
- Significance of Current Limiting Fuse Damageability (CEA)
- Investigation of Nuisance Blowings of Distribution Fuses
- Alternatives for Switching Padmounted Transformers (CEA)
- Probabilistic Analysis of Power Line Carrier Propagation on Distribution Systems (CEA)
- Study of Lighting Effects on Distribution Systems (CEA/OH)
- Cold Load Pickup Evaluation for MEA Utilities (MEA)
- Analysis of Secondary Fault Protection (CEA)

- Evaluation of Aging Ground Rod Connectors

Publications and Conference Papers

- "Asset Condition Assessment", 2007 Marcus Evans Conference on Asset Management, San Diego, May 2007
- "Temperature Rise of Submarine Cable on Riser Poles", S. Cress and J. Motlis, IEEE Transactions on Power Delivery, Vol. 6, No. 1, January 1991.
- "Transformer Loss-of-Life Calculation Using a Computerized Probabilistic Method", S.L. Cress, 10th International Conference on Electricity Distribution, CIRED, May 1989.
- "Probabilistic Techniques Applied to Selected Distribution System Problems", S.L. Cress and S. Krishnasamy, 145h INTER-RAM Conference for the Electric Power Industry, May 26-29, 1987.
- "Statistical Analysis of Power Systems Using the Adjoin and Monte Carlo Methods", S.L. Cress, Probabilistic Methods Applied to Power Systems Conference, July 11-13, 1986.
- Electro-thermal Damageability of Fusible Elements", S. L. Cress, International Conference on Distribution Fusing", Nov 2-4, 1981.

Patents and Trademarks

- US Patent on Non-Venting Cutout Fuse
- *ARCPRO* ™ Computer Program
- *TRANSIZE* ™ Computer Program
- *FUSECORD* ™ Computer Program

Standards Development

- Developer of international and Ontario Hydro standard tests to assess the degradation of fuses.
- Expertise in transformer and capacitor testing standards through development work
- Conducted HV and HC Standards and qualification tests
- Utility witness for factory testing on fuses, regulators and capacitors

Utility Oriented Software Development

- Co-developer of the commercially available ARCPRO program, which has become the North American Standard for assessing the hazard to workers accidentally exposed to electric arcs
- Developer of the commercially available FUSECORD program – user-friendly fuse application
- Developer of the commercially available TRANSIZE program – user-friendly fuse application
- Developer of software to analyze the effects of system transients such as ferroresonance and capacitor surges.

S.G. (Samy) Krishnasamy, Ph.D., P.Eng.

Academic Qualifications:

B.E. (Bachelor of Engineering)	India
M.Sc. (Engineering)	India
Ph.D. - University of Waterloo	Canada
Postdoctoral fellow, University of Waterloo	1967
Assistant Professor, University of Waterloo	1968 to 1970

Industrial Experience:

Research Division, Ontario Hydro	1971 to 1993
Samtech Inc.	1993 – to date

Samy has about 37 years of experience in the area of transmission, distribution, stations and structures area. He was the Head of the Transmission, Distribution and Structures Unit carrying out R&D work in the following areas:

- Estimate of wind and ice loading on overhead power lines, especially for lines passing through unusual terrain.
- Develop design guidelines for transmission lines in cold regions.
- Develop probability-based design for transmission structures.
- Provide expert guidance in disputes on weather loads on power lines.
- Conduct seminar and workshops on transmission line maintenance.
- Evaluate Fibre optic wires for use on overhead transmission structures.
- Instrument power lines to measure meteorological loads.
- **Develop and implement an extensive pole management program applying non-destructive techniques.**

  - ❖ **Samy has managed wood pole inspection/testing projects for numerous power utilities in Canada.**
  - ❖ **In the past 15 years, Samy has evaluated more than 200,000 in-service wood poles to assess their condition.**
  - ❖ **Samy has given training seminars on wood pole inspection, testing and data analysis.**

❖ **Presented papers and seminars on wood pole management**

- Measurement of structural response of nuclear structures under emergency loading conditions
- Participate in and manage several CEA and EPRI sponsored projects on weather loading and probability- based design methods.
- Organize several national and international seminars, symposiums and conferences related to transmission lines.

Professional Committee Activities (past and present):

Samy has been very active, both in North America and in Europe, in several technical and professional committees. He has served as the Chairman of the CEA (Canadian Electrical Association) Transmission and Distribution Section.

- Member of ASCE Ice Load Task Committee
  Member and reviewer of IEEE Towers, Poles and Conductors Committee
- Member of Cigre Task Force 22.06.01 on Atmospheric Icing
- Member of IEC TF on ice loads
- Member of Professional Engineers in the Province of Ontario.
- Responsible for initiating the PMAPS (Probabilistic Methods Applied to Power Systems) Conference series in 1986 and nurturing it through the past 20 years.

Selected projects related to overhead transmission lines managed/participated by Samy Krishnasamy

In this section, only a selected list of key projects managed/participated by Samy Krishnasamy is detailed. Samy has managed or has been a part of several other projects related to transmission/distribution lines.

1. **Weather Related Loads on Overhead Transmission Lines**

Realistic assessment of wind and ice loads on transmission lines is very important for realistic design of overhead transmission lines. Using specially designed load measuring systems wind and ice load data were collected over a period of more than10–15 years at selected locations in southern Ontario. The

data were analyzed to derive some important design factors. The information gathered, along with meteorological data, were used to how relationships could be developed for probabilistic design of transmission lines.

The data were also utilized in EPRI projects to develop appropriate design methods.

Samy developed and managed the project during his association with Ontario Hydro.

2. **Transmission Line Refurbishment Program**

The program was initiated to refurbish lines that were in service for over 70 years. An important part of this extensive program is to carry out failure tests on old towers at the site. The purpose is to estimate, among others, the remaining strength of these towers, member loads, tower deflection, foundation load etc.

Samy managed the tower instrumentation, load measurements and analysis, during his association with Ontario Hydro.

3. **Probabilistic Design of Transmission Lines**

The use of probabilistic techniques has been gaining momentum among utilities. Several national and international technical groups have been working for many years to incorporate the probabilistic techniques into design codes.

Starting with basics of probabilistic techniques analysis techniques were developed for structural analysis as well as structural loading. The weather related data gathered under the program 'Weather Related Loads on Overhead Transmission Lines' were used to develop the necessary load distribution for transmission and distribution line design.

Samy developed and managed the project during his association with Ontario Hydro.

4. **Tower Design for Extreme Environmental Conditions (Sponsored by Tokyo Electric Power Services Co., Tokyo, Japan)**

The purpose of this project is to take into consideration extreme environmental and terrain conditions, something similar to existing in Northern Ontario. Using existing Hydro One design codes transmission structures were designed to show the effect of extreme conditions. This project was carried out in cooperation with Hydro One.

Samy managed the project during his association with Samtech Inc.

5. Wet Snow Loads on Overhead Transmission Lines (Sponsored by Statnett, Norwegian Power Grid Company, Oslo, Norway)

The purpose of the program is to predict wet snow loads on transmission conductors using available weather data in Norway such as wind speed, wind direction, temperature, precipitation etc. Wet snow load maps were developed for Southern Norway. The program was carried out in cooperation with Statnett staff.

Samy managed the project during his association with Samtech Inc.

6. Expert Witness for Power Utilities

Expert witness on loading due to wind and ice was offered in a major civil litigation between two utility groups in 1997.

Samy managed the project during his association with Samtech Inc.

7. Fibre Optic Ground Wire for Overhead Transmission Lines

In late 1980s Ontario Hydro initiated a program to evaluate different type of fibre optic ground wire for use in overhead transmission lines. Necessary design methods were designed and a variety of tests were carried out in the laboratory. Several key finds, which resulted from the project, were included in the IEEE specifications under development at that time.

Samy managed the project during his association with Ontario Hydro.

8. **Non-destructive Inspection of Wood Poles for Power Lines.**

A modern program using available non-destructive techniques was developed to inspect and test transmission and distribution wood poles. The method combines also incorporates some of the key components of the traditional pole inspection program. The method was initially used and now Samtech Inc. is successfully using the method in its service to utility industries.

Samy initiated the project during his association with Ontario Hydro and has further developed to its current level.

9. Professional Courses for Power Industry Personnel

In cooperation with a colleague Samtech Inc. is offering on a regular basis. The course offers techniques to assess the structural condition of existing

transmission/distribution lines and to remedy the situation wherever possible.

A Detailed (but not complete) List of Publications by Samy Krishnasamy

Samy has published over 100 technical papers in Canadian, American and international journal and conferences. A list of publications is given below.

1. S.G. Krishnasamy, M.S. Nashid and C.B. Xourafas (1986), "Probability-Based Design of Wood Pole Distribution Lines", Proceedings of First International Symposium on Probabilistic Methods Applied to Electric Power Systems, Toronto, Ontario, Canada.

2. C.B. Xourafas and S.G. Krishnasamy (1986), "Prediction of Distribution Line Service Reliability by Probabilistic Methods", Proceedings of First International Symposium on Probabilistic Methods Applied to Electric Power Systems, Toronto, Ontario, Canada.

3. C.B.H. Cragg, S.G. Krishnasamy and H.S. Radhakrishna (1986), "Uplift Design of Transmission Tower Foundations in Sand: A Probabilistic Approach", Proceedings of First International Symposium on Probabilistic Methods Applied to Electric Power Systems, Toronto, Ontario, Canada.

4. S.G. Krishnasamy and N. Ramani, "Wind Direction and Extreme Wind Loads for Overhead Power Line design" (1986), Proceedings of First International Symposium on Probabilistic Methods Applied to Electric Power Systems, Toronto, Ontario, Canada.

5. M. Grigoriu, S.G. Krishnasamy and V.J. Longo (1986), "Estimation of extreme Wind Speeds from Short Wind Records" (1986), Proceedings of First International Symposium on Probabilistic Methods Applied to Electric Power Systems, Toronto, Ontario, Canada.

6. S.G. Krishnasamy, N. Ramani and J.P. Bayne (1986), "Application of Probability Techniques to Transmission Line Uprating", Proceedings of First International Symposium on Probabilistic Methods Applied to Electric Power Systems, Toronto, Ontario, Canada.

7. S.G. Krishnasamy (1984), "Analysis of Overhead Power Lines by Probabilistic Methods", Proceedings of ASCE Specialty Conference on Probabilistic Mechanics and Structural Reliability, Berkeley, California U.S.A.

8. S.G. Krishnasamy (1985), "Assessment of Weather Induced Transmission Line Loads on Probabilistic Basis", IEEE Transactions. PAS, Vol. 104, No. 9.

9. S.G. Krishnasamy, G.L. Ford and C.I. Orde (1981), "Predicting the Structural Performance of Transmission Lines Uprated by Reconductoring", IEEE Transactions, PAS Vol. 100, No. 5.

10. M. Grigoriu, S.G. Krishnasamy and V.J. Longo (1985), "Estimation of Transmission Line Design Wind Speeds from Limited Data", IEEE Transactions on Power Systems, Vol PWRD-1, No 2, New York, U.S.A,

11. (Edited by) S.G. Krishnasamy, Probabilistic Methods Applied to Electric Power Systems (Proceedings of the First International Symposium), Pergamon Press, Toronto, Ontario, Canada.

12. S.G. Krishnasamy (1985), "Wind and Ice Loading in Ontario Hydro", Proceedings of Fifth U.S. National Conference on Wind Engineering, Lubbock, Texas, U.S.A.

13. S.G. Krishnasamy (1988), "Wind and Ice Loads on Overhead Lines", Canadian Electrical Association Symposium on Line Security and Ice Accretion, Montreal, Canada.

14. S.G. Krishnasamy et al (1990), "Testing of Lattice Towers for Ontario Hydro Transmission Line Refurbishment Program", Paper presented at the IEE/PES Winter Meeting, Atlanta, Georgia, U.S.A.

15. D.G. Havard, G.A. Senkiw, S.G. Krishnasamy, C.J. Pon, M. Tabatabai, H.S. Radhakrishna, R.S. Tsang, H. Dey, I. Hathout, J.S. Phillips, P. Buchan, H.A. Ewing and G.S. Bellamy (1989), "Tower Testing for Transmission Line Refurbishment", Canadian Electrical Association Spring Meeting, Toronto, Ontario, Canada.

16. S.G. Krishnasamy, C.B.H. Cragg and N. Ramani (1988), "Influence of Wind direction on the Probability of Failure of Tower Foundation", Proceedings of the Second International Symposium on (PMAPS) Probability Methods Applied to Electric Power Systems, Oakland, California.

17. S.G. Krishnasamy, M. Tabatabai and I. Hathout (1988), "Wind and Ice Loads Data Base for Probability-Based Design of Transmission Lines", Proceedings of the Second International Symposium on (PMAPS) Probability Methods Applied to Electric Power Systems, Oakland, California.

18. S.G. Krishnasamy and H.A. Ewing (1988), "Probability-Based Data Base for Wood Pole Strength", Proceedings of the Second International Symposium on (PMAPS) Probability Methods Applied to Electric Power Systems, Oakland, California.

19. C.B.H. Cragg, S.G. Krishnasamy and N. Ramani (1987), "Probabilistic Analysis of Transmission Tower Foundations in Clay", Proceedings of the Fifth (ICASP5) International Conference on Applications of Statistics and Probability in Soil and Structural Engineering, Vancouver, B.C., Canada.

20. S.G. Krishnasamy and S.L. Cress (1987), "Probabilistic Techniques Applied to Selected Distribution Problems", 14th Inter-RAM Conference for the Electric Power Industry, Toronto, Ontario, Canada.

21. S.G. Krishnasamy and M. Tabatabai (1991), "Probabilistic Analysis of Weather Related Loads on Overhead Transmission Line in Ontario, Canada", Third International Conference on (PMAPS) Probabilistic Methods Applied to Electric Power Systems, London, England.

22. S.G. Krishnasamy, M. Tabatabai and I. Hathout (1991), "Reliability-Based Design of Overhead transmission Structures-A Critical Review", Third International Conference on (PMAPS) Probabilistic Methods Applied to Electric Power Systems, London, England.

23. S.G. Krishnasamy, H.A. Ewing and A.A. Shehata (1991), "Wood Pole Strength Data base for Reliability-Based Design", Third International

Conference on (PMAPS) Probabilistic Methods Applied to Electric Power Systems, London, England.

24. S.G. Krishnasamy, M. Tabatabai and J. Meale (1990), "Correlation of Wind and Ice Occurrences", Proceedings of the Fifth Workshop on Atmospheric Icing of Structures, Tokyo, Japan.

25. S.G. Krishnasamy, B.W. Warkentin and D. Thorne (1989), "Assessment of Wood Distribution Poles by Non-Destructive Evaluation technique", International Conference on Wood Poles, Fort Collins, Colorado, U.S.A.

26. S.G. Krishnasamy and R.D. Brown (1986), "Extreme Value Analysis of Glaze Ice Accretion in Southern Ontario", Proceedings of the Third Workshop on Atmospheric Icing of Structures, Vancouver, B.C., Canada.

27. S.G. Krishnasamy, F. Kuja and J. Motycka (1986), "Ice Free Anemometer, Laboratory and Field Testing", Proceedings of the Third Workshop on Atmospheric Icing of Structures, Vancouver, B.C., Canada

28. (Edited by) S.G. Krishnasamy and R. Kennon (1988), "Probabilistic Methods Applied to Electric Power Systems (Proceedings of the Second International Symposium), EPRI Report, Palo Alto, California, U.S.A.

29. S.G. Krishnasamy (1989), "Distribution Planning by Probabilistic Techniques", Canadian Electrical Association Distribution System Planning Conference No. 13, Calgary, Alberta, Canada.

30. S.G. Krishnasamy (1984), "Weather Related Loads on Transmission Lines and Their Consequences", Proceedings of the Second Workshop on Atmospheric Icing of Structures, Trondheim, Norway.

31. S.G. Krishnasamy (1982), "Measurement of Ice Accretion on Overhead Transmission Line Conductors", Proceedings of the First Workshop on Atmospheric Icing of Structures, Hanover, New Hampshire, U.S.A.

32. S.G. Krishnasamy (1982), "Field Measurement of Wind and Ice Loads on High Voltage Transmission Lines", Canadian Electrical Association Line Security and Ice Accretion Symposium, Montreal, Quebec, Canada.

33. S.G. Krishnasamy (1981), "Wind and Ice Loading on Overhead Transmission Lines", Proceedings of Fourth U.S. National Conference on Wind Engineering Research, Seattle, Washington, U.S.A.

34. S.G. Krishnasamy and M. Tabatabai (1989), "Wind Loads on Bare and Ice-Covered Overhead Conductors", Proceedings of the Sixth U.S. National Conference on Wind Engineering, Houston, Texas, U.S.A.

35. S.G. Krishnasamy and N. Ramani (1989), "Design Wind Loads for Overhead Power Lines Accounting for Wind direction", Journal of Wind Engineering and Industrial Dynamics, Elsevier Science Publishers, Volume 32, 1989.

36. S.G. Krishnasamy and N. Ramani (1985), "Modelling of Simple Lattice Type Steel Structures for Reliability Analysis", Proceedings of the Sixth Annual Pittsburgh Conference, Pittsburgh, Pennsylvania, U.S.A.

37. S.G. Krishnasamy and A.N. Sherbourne (1976), "Behaviour of Structural Elements Under Cyclic Elastic Loading", Preprinted Abstracts of ASCE Specialty Conference, Waterloo, Ontario, Canada.

38. S.G. Krishnasamy, C.B. Xourafas and M.S. Nashid (1984), "Reliability Based Design and Cost Optimization of Wood Pole Distribution Lines", Proceedings of the Fifth Annual Pittsburgh Conference, Pittsburgh, Pennsylvania, U.S.A.

39. S.G. Krishnasamy (1987), "Analysis of Overhead Transmission Structures by Probabilistic Methods", Proceedings of the Fifth (ICASP5) International Conference on Applications of Statistics and Probability in Soil and Structural Engineering, Vancouver, B.C., Canada.

40. S.G. Krishnasamy (1988), "Probabilistic Analysis of Overhead Power Transmission Structures", Proceedings of the Symposium on Reliability-Based Design in Civil Engineering, Lausanne, Switzerland.

41. S.G. Krishnasamy (1985), "Uprating of Overhead Transmission Lines by Probability-Based Methods", Proceedings of the Fourth International Conference On Structural Safety and Reliability, Kobe, Japan.

42. S.G. Krishnasamy and W.W. Koziak (1984), "Structural Integrity of CANDU Reactor's Vacuum Building", Proceedings of the Fifth International Meeting on Thermal Nuclear Reactor Safety, Karlsruhe, Germany.

43. H.W. Stokes, M.R. Khan, S.G. Krishnasamy, W.W. Koziak and T. Bukhanov (1984), "16 PRV Blowthrough Test at Bruce 'B' GS.", Proceedings of the International Containment design Conference, Toronto, Ontario, Canada.

44. D.G. Havard, S.G. Krishnasamy and G. Senkiw (1991), "Two Sets of Aging Towers are Tested in the Field", Transmission & Distribution International, Volume 2, No. 3, 1991.

45. S.G. Krishnasamy, C.J. Pon and H. Grad (1989), "Mechanical Evaluation of Composite Fibre Optic Ground Wires", IEEE Transactions on Power Delivery, Vol. 4, No. 3.

46. A.N. Sherbourne and S.G. Krishnasamy (1974), "Mild Steel Beams: Behaviour and Failure under Cyclic alternating Loads", Publications, International Association for Bridge and Structural Engineering, Volume 34-1.

47. M.M. Ghamian, S.G. Krishnasamy and A.N. Sherbourne (1974), "Steel Structures under Cyclic Unequal Deflections", Publications, International Association for Bridge and Structural Engineering, Volume 34-1.

48. A.N. Sherbourne and S.G. Krishnasamy (1969), "Moment Curvature Models Under Reversed Cyclic Straining", Experimental Mechanics, Volume 9, No. 1.

49. S.G. Krishnasamy et al (1990), "Testing of Lattice Towers for Ontario Hydro Transmission Line Refurbishment Program", IEEE Transactions on Power Delivery, Vol. 5, No. 3.

50. S.G. Krishnasamy, A.N. Sherbourne and K.K. Khurana (1972), "Deflection of Mild Steel Beams Under Symmetric Alternate Load", SESA Spring Meeting, Cleveland, Ohio.

51. S.G. Krishnasamy and A.N. Sherbourne (1966), "Mild Steel Structures Under Reversed Bending", RILEM Symposium on the 'Effects of Repeated Loading on Mild Steel Structures', Mexico City.

52. S.G. Krishnasamy and A.N. Sherbourne (1968), "Response of A 'Plastic Hinge' to Low Cycle Alternating deflections", Experimental Mechanics, Vol. 8, No. 6.

53. A.N. Sherbourne and S.G. Krishnasamy (1970), "Mild Steel Beams Under Cyclic Alternating Deflections", Publications, International Association for Bridge and Structural Engineering, Vol. 30-I.

54. S.G. Krishnasamy, A.N. Sherbourne and K.K. Khurana (1973) "Deformation Behaviour of Mild Steel Beams Under Alternating Loads", Materials and Structures, RILEM, Vol. 6, No. 31.

55. S.G. Krishnasamy and M. Tabatabai (1992), "Ice and Wind-on-Ice Loads Measurement Program in Ontario Hydro", International seminar on Ice Load Measurements, Kristiansand, Norway.

56. S.G. Krishnasamy and M. Tabatabai (1992), "Assessment of Extreme Weather Related Loads on transmission Line Conductors", Proceedings of the Congress on Innovative Large Span Structures, Toronto, Ontario, Canada.

57. S.G. Krishnasamy and G.A. Senkiw (1992), "In-Situ testing of Transmission Tower Structures in Ontario Hydro", Proceedings of the Congress on Innovative Large Span Structures, Toronto, Ontario, Canada.

58. S.G. Krishnasamy and A.A. Shehata (1992), "Non-Destructive Assessment of Wood Poles", Canadian Electrical Association Transactions, CEA, Montreal, Canada.

59. S.G. Krishnasamy, D.G. Havard and C.J. Pon (1985), "Problems Due to Icing of Overhead Lines - Part I", Proceedings of Canadian Congress of Applied Mechanics, London, Ontario, Canada.

60. D.G. Havard, C.J. Pon and S.G. Krishnasamy (1985), "Problems Due to Icing of Overhead Lines - Part II", Proceedings of Canadian Congress of Applied Mechanics, London, Ontario, Canada.

61. A.N. Sherbourne and S.G. Krishnasamy (1968), "Indeterminate Systems Under Cyclic Alternating Loads", Materials and structures, RILEM.

62. S.G. Krishnasamy and A.N. Sherbourne (1971), "Model I-shaped Beams Under Alternating deflections", Journal of Structural Division, ASCE.

63. S.G. Krishnasamy and A.N. Sherbourne (1971), "Design of Mild Steel beams Under Low-Endurance Fatigue Conditions", First International Conference on Structural Mechanics in Reactor Technology, Berlin, Germany.

64. A.A. Shehata and S.G. Krishnasamy (1992), "Ontario Hydro's Experience in Wood Pole Testing", Second International Conference on Wood Poles and Piles, Fort Collins, Colorado, U.S.A.

65. A.N. Sherbourne, T.H. Topper, S.G. Krishnasamy and A. Robb (1968), "The Design of A Low Cyclic Testing system for Low Cycle Fatigue", Proceedings of RILEM Symposium, Stuttgart, Germany.

66. K.T.S. Iyengar and S.G. Krishnasamy (1964), "Analogue Computer for Grid Works", Civil Engineering and Public Works Review, London, England.

67. S.G. Krishnasamy and D.G. Havard (1972), "Tensile, Creep and Fatigue Properties of Polymers for Solid-Insulated Station Bus",

Symposium on Applications of Solid Mechanics, Waterloo, Ontario, Canada.

68. S.G. Krishnasamy and A.N. Sherbourne (1973), "Design Methods for Ductile Structures Subjected to Relatively Large Cyclic Deformations", Second International Conference on Structural Mechanics in Reactor Technology, Berlin, Germany.

69. S.G. Krishnasamy and D.G. Havard (1974), " 'Shrinkback' and Creep in Solid-Insulated High Voltage Station Bus", Second Symposium on Applications of Solid Mechanics, Hamilton, Ontario, Canada.

70. S.G. Krishnasamy (1975), "Design of Structural Elements Against Low-Cycle Fatigue Conditions" (invited paper), Third International Conference on Structural Mechanics in Reactor Technology, London, England.

71. S.G. Krishnasamy (1975), "Response of Structures Under Random Loading Conditions", Third International Conference on Structural Mechanics in Reactor Technology, London, England.

72. S.G. Krishnasamy and A.N. Sherbourne (1978),"Mild Steel Beams Under Inelastic Cyclic and Random Deflections", Solid Mechanics Archives, Noordhoff International Publishing, Vol. 3, No. 2.

73. S.G. Krishnasamy and A.N. Sherbourne (1979), "Structural Beam Shapes under Cyclic Inelastic Loads", Fifth International Congress on Structural Mechanics in Reactor Technology, Berlin, Germany.

74. S.G. Krishnasamy (1980), "Fatigue Resistance of Large-Size Helically Corrugated Aluminum Sheathed Cables", IEEE Transactions, PAS Vol 99, No 66.

75. S.G. Krishnasamy and A.N. Sherbourne (1977), "Design of Mild Steel Structures Under Unequal Cyclic Loads", Fourth International Congress on Structural Mechanics in Reactor Technology, San Francisco, California, U.S.A.

76. K.T.S. Iyengar and S.G. Krishnasamy (1962), "Analogue Computer for Frameworks", Indian Concrete Journal, Bombay, India.

77. S.G. Krishnasamy and A.N. Sherburne (1969), "Behaviour of I-Beams Under Fully Reversed Large Deflections", Second Canadian Congress of Applied Mechanics, Waterloo, Ontario, Canada.

78. S.G. Krishnasamy and A.N. Sherbourne (1977), "Low-Endurance fatigue of Mild Steel Beams", Solid Mechanics Archives, Noordhoff International Publishing, Vol 2, No 3.

79. A.N. Sherbourne and S.G. Krishnasamy (1978), "Fatigue Life of Mild Steel Beams Under Inelastic Cyclic and Random Deflections", Proceedings of the Institution of Civil Engineers, Vol 65, Part 2, London, England.

80. S.G. Krishnasamy (1981), "Dynamic Response of Overhead Transmission Lines to Wind and Ice Loading", CEA International Symposium on Overhead Conductor Dynamics, Toronto, Ontario, Canada.

81. S.G. Krishnasamy (1982), "A Case Study on the Failure and Restoration of 23 Towers on Ontario Hydro's 230 kV Line on January 26, 1978", CEA Transactions, Montreal, Quebec, Canada.

82. S.G. Krishnasamy (1983), "Upgrading of Transmission Lines by Probability-Based Methods: A Case Study", Panel Discussion, IEEE PES Summer Meeting, Los Angeles, California, U.S.A.

83. S.G. Krishnasamy (1981), "Wind and Ice Loads on Overhead Transmission Lines", Research Review, Ontario Hydro Research Division, No 3, Toronto, Ontario, Canada.

84. S.G. Krishnasamy and D.G. Havard (1973), "Tensile, Creep and Fatigue Properties of Polymers for Solid Insulated Station Bus", Fourth Canadian Congress of Applied Mechanics, Montreal, Quebec, Canada.

85. S.G. Krishnasamy and D.G. Havard (1975), "Fatigue Study of Corrugated Aluminum Cable Sheath", Fifth Canadian Congress of Applied Mechanics, Fredericton, New Brunswick, Canada.

86. S.G. Krishnasamy (1978), "Fatigue Study of Corrugated Aluminum Cable Sheath", SESA Spring Meeting, Wichita, Kansas, U.S.A.

87. S.G. Krishnasamy (1978), "Wind and Ice Loads on Overhead Transmission Lines", Third U.S. national Conference on Wind Engineering Research, Gainsville, Florida, U.S.A.

88. S.G. Krishnasamy (1977), "Study of Wind Ice Loads on Overhead Transmission Lines", Sixth Canadian Congress of Applied Mechanics, Vancouver, B.C., Canada.

89. S.G. Krishnasamy and P.K. Mukherjee (1982), "Structural Integrity of Vacuum Buildings for Large CANDU Nuclear Plants", Ontario Hydro Research Review, No 5, Toronto, Ontario, Canada.

90. S.G. Krishnasamy, Discussion of Paper "Probabilistic Design of transmission Lines - Parts 1&2" (1983) by E.Ghannoum, IEEE Transactions, PAS, Vol 102, No 9, New York, U.S.A.

91. S.G. Krishnasamy, Discussion of Paper "A Practical Approach to Reliability Based Design" (1985) by B. White, IEEE Transactions, PAS, Vol 104, No 10, New York, U.S.A.

92. S.G. Krishnasamy and H.A. Ewing (1987), "A Comprehensive Program for Wood Poles", Canadian Electrical Association, Transaction, Paper No 87-TR-245, Montreal, Quebec, Canada.

93. S.G. Krishnasamy and D.G. Havard (1972), "Mechanical Properties of Polymers for Solid-Insulated Cables", Ontario Hydro research Quaterly, Vol 24, No 3, Toronto, Ontario, Canada.

94. S.G. Krishnasamy and D.G. Havard (1975), "Shrinkback and Creep of Solid-Insulated Bus for Compact HV Stations", Ontario Hydro Research Quarterly, 2nd Quarter, Toronto, Ontario, Canada.

95. S.G. Krishnasamy and M. Tabatabai (1990), "Wind Loads on Bare and Ice-Covered Conductors", Journal of Wind Engineering and Industrial Aerodynamics, Vol 36., Amsterdam, Netherlands.

96. M.M. Ghamian, S.G. Krishnasamy and A.N. Sherbourne (1973), "Inelastic Deformations of Mild-Steel Beams Under Symmetrical and Unsymmetrical Cyclic Bending", Proceedings of the Third SESA International Congress on Experimental Mechanics, Los Angeles, California, U.S.A.

97. S.G. Krishnasamy (1966), "Beams Under Alternating Deflections", Ph.D. Thesis, University of Waterloo, Waterloo, Ontario, Canada.

98. S.G. Krishnasamy (1962), "Analogue Computer for Structural Frames", M.Sc. Thesis, Indian Institute of Science, Bangalore, India.

99. P. Meyers, A. Melinosku, S.G. Krishnasamy (1990), "Metallizing Techniques for High Temperature Super Metallic Conductor Contacts", Canadian conference on High Temperature Super Conductor, Montreal, Quebec, Canada.

99. S.G. Krishnasamy and M.Tabatabai (1989), "Wind and Ice Loads on Conductors: A DataBase", Canadian Electrical Association, Transaction, Paper No 89-TR-244, Toronto, Ontario, Canada.

100. S.G. Krishnasamy (1992), "Experience in Applying Non Destructive Test Methods to In-Service Wood Distribution Lines", Presented at the E&O Spring Meeting, Vancouver, B.C.