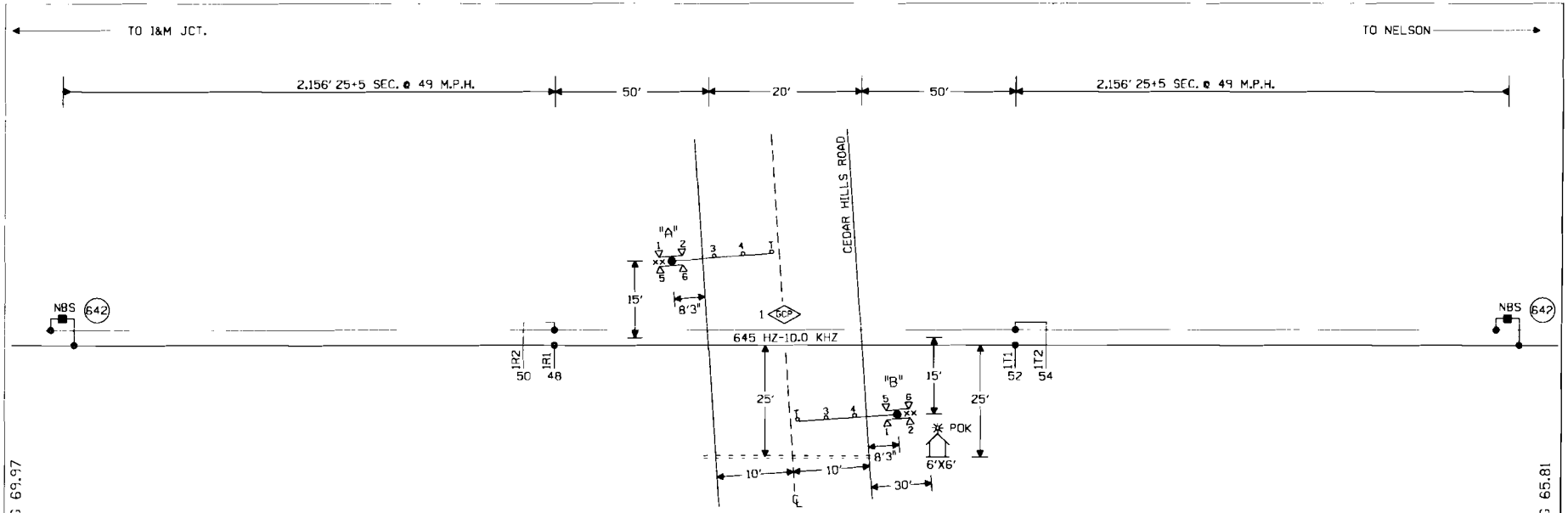

NOTES:

⊗ = TWISTED WIRES
INSULATED 1 TWIST PER FT.
ALL TRACK WIRES 2C. #6

TRANSMITTER AND RECEIVER LEADS
TO BE SEPARATED BY AT LEAST 12" IN TRENCH,
LENGTHS SHOULD NOT EXCEED MANUFACTURER'S
RECOMMENDATION.

TOP OF FOUNDATION TO BE AT SAME ELEVATION
AS THE SURFACE OF THE TRAVELED WAY & NO
MORE THAN 4" ABOVE THE SURFACE OF THE GROUND.

ALL BUNGALOW WIRING TO BE #16 AWG FLEX
UNLESS OTHERWISE SPECIFIED EXCEPT ALL GROUND
WIRE TO BE #6 AWG FLEX OR LARGER.

ALL WIRING IN GATE MECHANISM TO BE #10 "AWG FLEX".

REFER TO UP STANDARD DWG FOR BUNGALOW GROUNDING.

ALL LIGHTS TO BE 12" ROUNDELS.

= = = = = = 4" X 40' CONDUIT

LIGHTS: LED LIGHTS

GATE A: 18'
GATE B: 18'

CRTU MICROBURST

xx = BELL

CONSTRUCTION NOTES:

1. REUSE EXISTING CRTU CELLULAR (TAB 716A).
2. REMOVE EXISTING HARD WIRE SHUNTS.

W(S) ←—O—→ E(N)

NEW SHEET
DUNLAP, ILLINOIS
CEDAR HILLS ROAD
M.P. 67.70
PEORIA SUBDIVISION
O.O.T. #175 633Y

1 03-30-06 INSTALL FLS/GATES & CONSTANT WARNING AT CEDAR HILLS ROAD M.P. 67.70 A.F.E. 56136 / RLT /CTC/RDD	MODIFICATION LEVEL		UNION PACIFIC QUALITY PRODUCTIVITY SAFETY SIGNAL DESIGN	DES: CTC	UNION PACIFIC RAILROAD	DATE 03-30-06
	Q. A. LAST LEVEL CHECKED	DN		DIG: CTC	DUNLAP, ILLINOIS	SHEET 1
	LAST LEVEL MOD THIS TYPICAL	DN		CHK: JJP	HIGHWAY CROSSING SIGNALS	DWG 67.70
	LAST LEVEL BY DESIGNER	DD		A.F.E. 56136	CONTROL CIRCUITS	STL
	CHANGED FROM TYPICAL?	Y		ID: STL6770.1X	Office of AVP Engineering - Design Omaha, Nebraska	

1756334

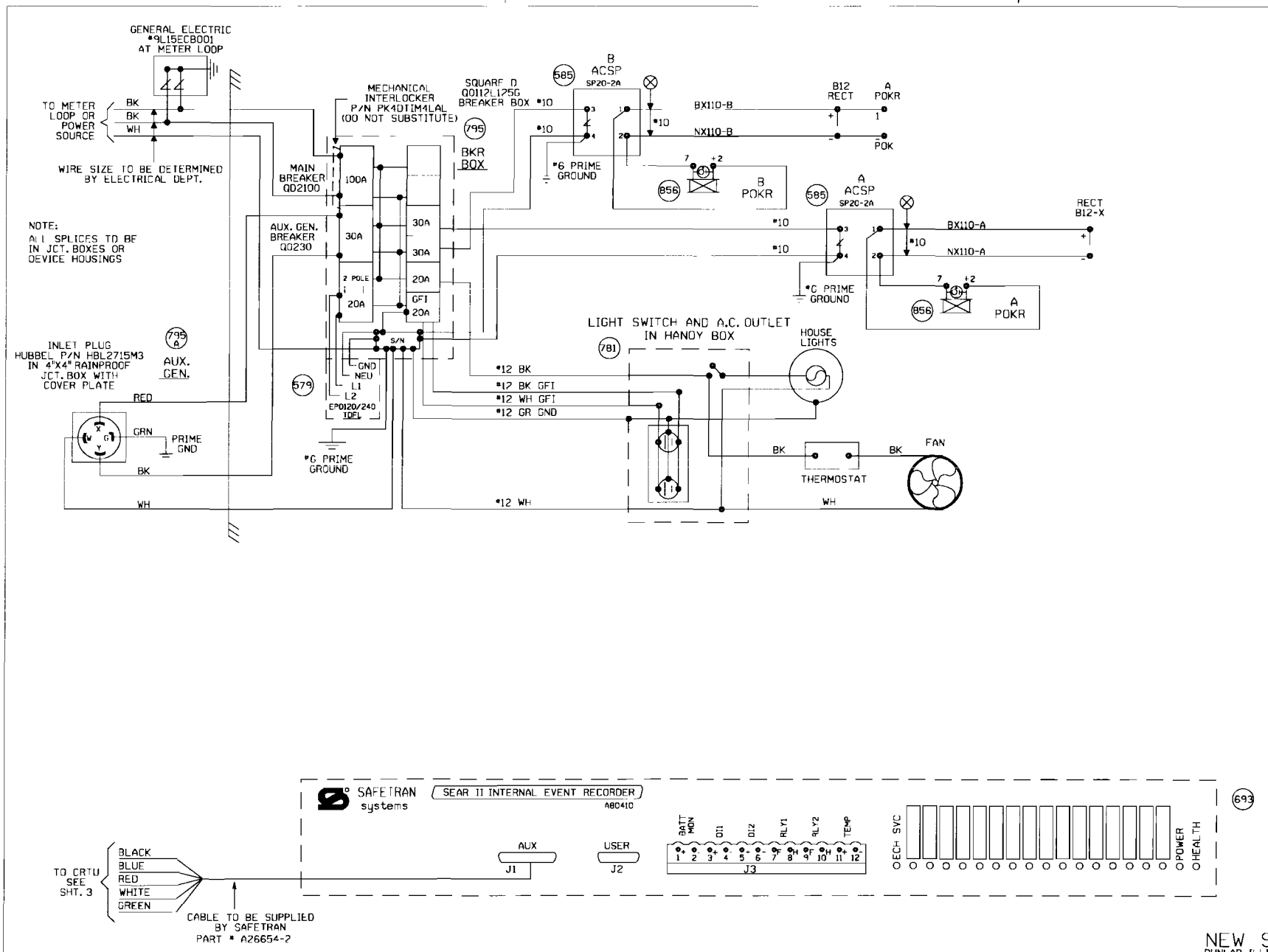

NEW SHEET
DUNLAP, ILLINOIS
CEDAR HILLS ROAD
M.P. 67.70
PEORIA SUBDIVISION
D.O.T.#175 633Y

1	03-30-06	MODIFICATION LEVEL		UNION PACIFIC	DES: CTC	UNION PACIFIC RAILROAD	DATE 03-30-06
INSTALL FLS/GATES & CONSTANT WARNING AT CEDAR HILLS ROAD M.P. 67.70 A.F.E. 56136		Q. A. LAST LEVEL CHECKED	ON	QUALITY PRODUCTIVITY SAFETY	DIG: CTC	DUNLAP, ILLINOIS	SHEET 2
		LAST LEVEL MOD THIS TYPICAL	ON		CHK: RLT	HIGHWAY CROSSING SIGNALS	DWG 67.70
		LAST LEVEL BY DESIGNER	DQ		A.F.E. 56136	CONTROL CIRCUITS	STL
	RLT / /CTC/RDD	CHANGED FROM TYPICAL?	Y	SIGNAL DESIGN	ID: STL6770.2X	Office of AVP Engineering - Design Omaha, Nebraska	

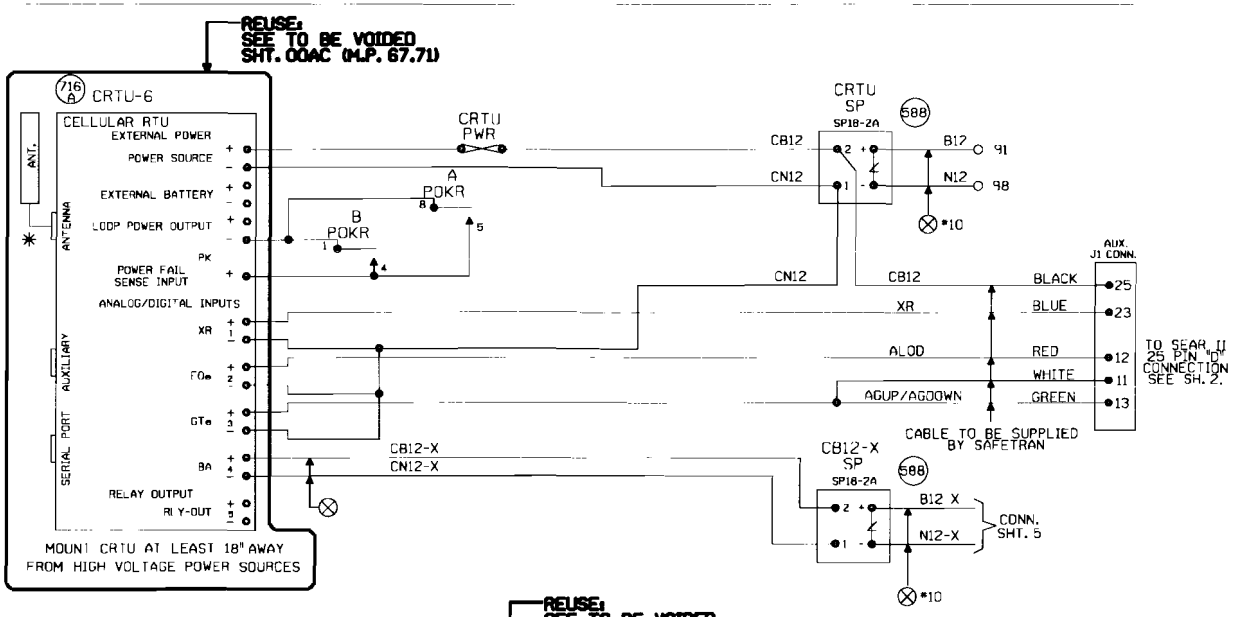

NOTES:

ALL DIODES 1N5060 OR 1N4004 UNLESS OTHERWISE NOTED.

✳ MOUNT ANTENNA ON TOP OF HOUSE.
INSTALL ANTENNA CABLE AND CHOKE PER TECH BULLENTIN #99-0015-00

ALL WIRES #18 UNLESS OTHERWISE NOTED.

ALL UNUSED 'NC' INPUTS MUST BE TIED HIGH TO BATTERY

ALL UNUSED ANALOG INPUTS MUST BE TIED HIGH TO BATTERY

ALL UNUSED 'NO' INPUTS MUST BE DISCONNECTED

NORMAL STATE FOR ANALOG CHANNELS IS EQUAL TO THE STORED NOMINAL VOLTAGE +120% OR -81%

CRTU FRONT PANEL DISPLAY CHART INDICATES NORMAL STATE

■ DIGITAL INPUT HIGH, OR POWER FAIL INPUT CLOSED ☐ DIGITAL INPUT LOW, OR POWER FAIL INPUT OPEN

■ L ← LATCH IS SET BECAUSE CRTU DETECTED AN ALARM CONDITION
12.06V L ←

'aRUN MODE' 'aRUN MODE-SILENT'
CRTU RADIO IS DISABLED. REPROGRAM CRTU WITH LAPTOP.

ANALOG AND AC INPUT MODULES AND SURGE PROTECTORS MUST BE MOUNTED LESS THAN 18" FROM CRTU

ANALOG MODULES CONVERT DC VOLTAGE TO A SQUARE WAVE. A WORKING ANALOG MODULE WILL HAVE 4.5VDC TO 8.0VDC BETWEEN 5VOUT+ AND 6VOUT . WHERE, 0VOLTS = 0HZ OUT, 3DVOLTS = 10KHZ OUT, AND 15VOLTS = 5KHZ OUT
MAKE SURE CRTU IS PROGRAMMED WITH CALIBRATION SETTINGS.

CRTU CH4 CAN BE CONNECTED TO EITHER SP18 OR EQUIPMENT SIDE OF MDSAI, TAB 565

REUSE: SEE TO BE VOIDED SHT. 00AC (M.P. 67.71)

UNIT INSTALLATION AND SETUP

R.R. SITE ID WHERE: SSSS = 4 CHARACTER SUBDIVISION ID. FILL WITH PRECEDING ZEROS AS REQUIRED. THE MAIN TRACK SUBDIVISION ID* IS IN THE CURRENT TIMETABLE. INDUSTRIAL LEADS, LEASED, AND LEAD TRACKS LISTED WITHIN THE SUBDIVISION MAY HAVE THEIR OWN UNIQUE SUBDIVISION ID*. ALWAYS REFER TO CURRENT PRINTED COPY OF THE TIMETABLE.
LLLLLLLL = 8 CHARACTERS USE DOT* AT CROSSINGS, AND
WDLLLLLL = USE 'WD' THEN MP* AT WAYSIDE LOCATIONS.
EXAMPLE = 0785WD180L.5UT
HBLLLLLL = USE 'HB' THEN MP* AT HBD SITES.
EXAMPLE = 0100-HB55.62TX
THE MP* MUST USE A DECIMAL POINT TO SEPARATE NUMBERS. FILL WITH PRECEDING DASHES AS REQUIRED.
AA - 2 CHARACTER STATE NAME FOR ALL LOCATIONS.
MUST BE 14 CHARACTERS LONG, NO SPACES ALLOWED.

SITE IDENTIFIER: SSSSLLLLLLLLAA	0019 175633YIL
OPERATION TO RESUME: RUN	
SIGNAL STRENGTH dBm	
CARRIER ID	
FIRMWARE VERSION	2.3.
SERIAL NUMBER	
BOOT VERSION:	
CMM VERSION:	
MIN ASSIGNMENT	
ESN: (MICROBURST ONLY)	
CONFIGURATION NET	MICROBURST
SILENCE INTERVAL	60 MINUTES
HEALTHCHECK INTERVAL	EVERY 2 DAYS
ALARM DEFER DELAY	240 MINUTES (4 HOURS)
SIGNAL STATUS	
SCADANET STATUS	
CALIBRATION CONSTANT CH1	
CALIBRATION CONSTANT CH2	
CALIBRATION CONSTANT CH3	
CALIBRATION CONSTANT CH4	
CALIBRATION CONSTANT PS	

FIELD PROVIDES: SAMPLED NOMINAL VOLTAGES, SCADANET STATUS CALIBRATION CONSTANTS, SERIAL NUMBER, AND SIGNAL STATUS.

CHANNEL SETUP STANDARD CONFIGURATION 32:XR,FOe,GTe,Ba

CHANNEL NORMAL STATE	SENSE (NO/NC)	NAME FUNCTION	RECOGNITION DELAY SECONDS ACTIVE	RECOGNITION DELAY SECONDS NORMAL	RETURN TO NORMAL	REPORTING MODE	ALARM LINKED CHANNEL	ALARM LINKED CRITERIA	EVENT LOGGING ENABLED OPTIONS
POWER FAIL (CH5) ■	POWER FAIL DETECT NO	PF:n-PK AC POWER FAIL	7,200 ALARM	300 NORMAL	ENABLED	ALERT	DISABLED	N/A	
CH1 ■	DIGITAL INPUT NC	CH1-XR XR DOWN TO LONG	1,800 ALARM	1 NORMAL	ENABLED	ALERT	DISABLED	N/A	ANALOG VALUE SENT
CH2 ☐	DIGITAL INPUT NO	CH2-FOe LIGHT OUT	120 ALARM	10 NORMAL	ENABLED	ALERT	DISABLED	N/A	
CH3 ☐	DIGITAL INPUT NO	CH3-GTe GATES NOT UP/DOWN	120 ALARM	10 NORMAL	ENABLED	ALERT	DISABLED	N/A	DIGITAL EVENTS
CH4 STORED NOMINAL VOLTAGE	ANALOG INPUT N/A	CH4-Ba/V BATTERY MONITOR BATTERY LOW	600 ALARM	1200 NORMAL	ENABLED	ALERT W/UPDATE	DISABLED	N/A	PF:n-PK CH1-XR CH2-FOe CH3-GTe
POWER SOURCE (CH6)	ANALOG INPUT N/A	PS-Ba/V BATTERY MONITOR BATTERY LOW	600 ALARM	1200 NORMAL	ENABLED	ALERT W/UPDATE	DISABLED	N/A	

ANALOG CHANNEL	USEFUL RANGE VOLTS LOW	USEFUL RANGE VOLTS HIGH	DISPLAYED RANGE VOLTS LOW	DISPLAYED RANGE VOLTS HIGH	RELATIVE ALARM POINT LOW	RELATIVE ALARM POINT HIGH	ABSOLUTE ALARM POINT LOW	ABSOLUTE ALARM POINT HIGH	AUTOMATIC UPDATE INTERVAL	STORED NOMINAL VOLTAGE	SAMPLED NOMINAL VOLTAGE
CH4	0.0	30.00	0.0	30.00	81%	120%	10.0	29.0	14 DAYS	12.69	
POWER SOURCE	0.0	30.00	0.0	30.00	81%	120%	10.0	29.0	14 DAYS	12.69	
RELAY OUTPUT	NAME RLY-OUT		ACTIVE SET-UP-OPEN		NORMAL CLR-ON-CLOSE		PULSE DURATION		15 SECONDS	StdCfg Ver: 2.3.3 REV'D 9-20-02	

MAINTENANCE OPERATIONS

TO START OR ABORT ANY PROCEDURE

1. PRESS THE 'CANCEL' BUTTON FIRST

WHEN RESPONDING TO A CALL, PUT THE CRTU IN THE 'SILENCE ALARMS' MODE

1. PRESS 'SELECT' AND THEN '+ ARROW' BUTTON UNTIL
   DISPLAY: ACTION?
   SILENCE ALARMS
2. PRESS THE 'SELECT' BUTTON TWICE
3. CORRECT PROBLEM AND SIMULATE NORMAL TRAIN MOVEMENT THROUGH THE LOCATION
4. EXAMINE EACH CHANNEL ON THE CRTU
5. PRESS THE '+/- ARROW' BUTTON
   VERIFY ALL CHANNELS INDICATE A NORMAL STATE
   NORMAL STATES ARE ON THE CHANNEL SETUP CHART

CLEAR TIMERS, LATCHES AND SEND ALL NORMAL

1. DO STEPS #1 - #5 ABOVE, AND PRESS 'CANCEL'.
2. PRESS 'SELECT' AND THEN '- ARROW' BUTTON UNTIL
   DISPLAY: ACTION?
   SERVICE MODE
3. PRESS 'SELECT' AGAIN TO RESET TIMERS, AND IF
   DISPLAY: SERVICE MODE
   ALL NORMAL
4. PRESS 'SELECT' AGAIN TO CLEAR LATCHES, AND SEND ALL NORMAL. SKIP STEPS #5-#6.
5. HOWEVER, IF ALARMS ARE NOT CLEARED:
   DISPLAY: SERVICE MODE
   ALARMS PENDING/PRESENT
6. PRESS 'CANCEL', CORRECT PROBLEM AND REPEAT STEPS #2 THRU #5 UNTIL ALL NORMAL SENT.

TO CANCEL THE 'SILENCE ALARMS' MODE

1. PRESS 'SELECT' AND THEN '+ ARROW' BUTTON UNTIL
   DISPLAY: ACTION?
   CANCEL SILENCE
2. PRESS THE 'SELECT' BUTTON AGAIN

EXAMINE & SET BATTERY VOLTAGE NOMINAL VALUE

1. PRESS THE '+ ARROW' OR '- ARROW' BUTTON UNTIL THE DESIRED CHANNEL IS DISPLAYED.
   DISPLAY: PS-Ba
   13.83V NORMAL
2. VERIFY THE DISPLAYED READING WITH A DIGITAL VOLTMETER
3. PRESS THE 'SELECT' BUTTON, AND THE CRTU DISPLAY WILL SWITCH BETWEEN CURRENT/SAVED NOMINAL VOLTAGE VALUES.
   DISPLAY: NOMINAL ON #67 (CURRENT)
   13.83
   DISPLAY: SAVED NOMINAL 6 (STORED)
   12.69
4. PRESS THE 'SELECT' BUTTON AND THE CURRENT OR 'NOMINAL ON' VALUE WILL BE SAMPLED AND STORED AS THE 'SAVED NOMINAL' VALUE
5. VERIFY THE 'NOMINAL ON' AND 'SAVED NOMINAL' VALUES ARE EQUIVALENT, REPEAT STEPS #1 THRU #3 & PRESS THE 'CANCEL' BUTTON.

NEW SHEET
DUNLAP, ILLINOIS
CEDAR HILLS ROAD
M.P. 67.70
PEORIA SUBDIVISION
D.O.T.#175 633Y

1	03-30-06 INSTALL FLS/GATES & CONSTANT WARNING AT CEDAR HILLS ROAD M.P. 67.70 A.F.E. 56136 / /CTC/RDD RLT	MODIFICATION LEVEL		UNION PACIFIC SAFETY SIGNAL DESIGN	DES: CTC	UNION PACIFIC RAILROAD	DATE 03-30-06
		Q.A. LAST LEVEL CHK'D.	OJ		DIG: CTC	DUNLAP, ILLINOIS	SHEET 3
		LAST LEVEL MOD. THIS TYP.	OJ		CHK: RLT	HIGHWAY CROSSING SIGNALS	DWG 67.70
		LAST LEVEL BY DESIGNER.	OQ		A.F.E. 56136	CONTROL CIRCUITS	STL
		CHANGED FROM TYP.? Y/N	Y		ID: STL6770.3X	Office of AVP Engineering - Design Omaha, Nebraska	

(REV.06.01.04) (CRTUCFG32-28AT.3)

4-15-26-36

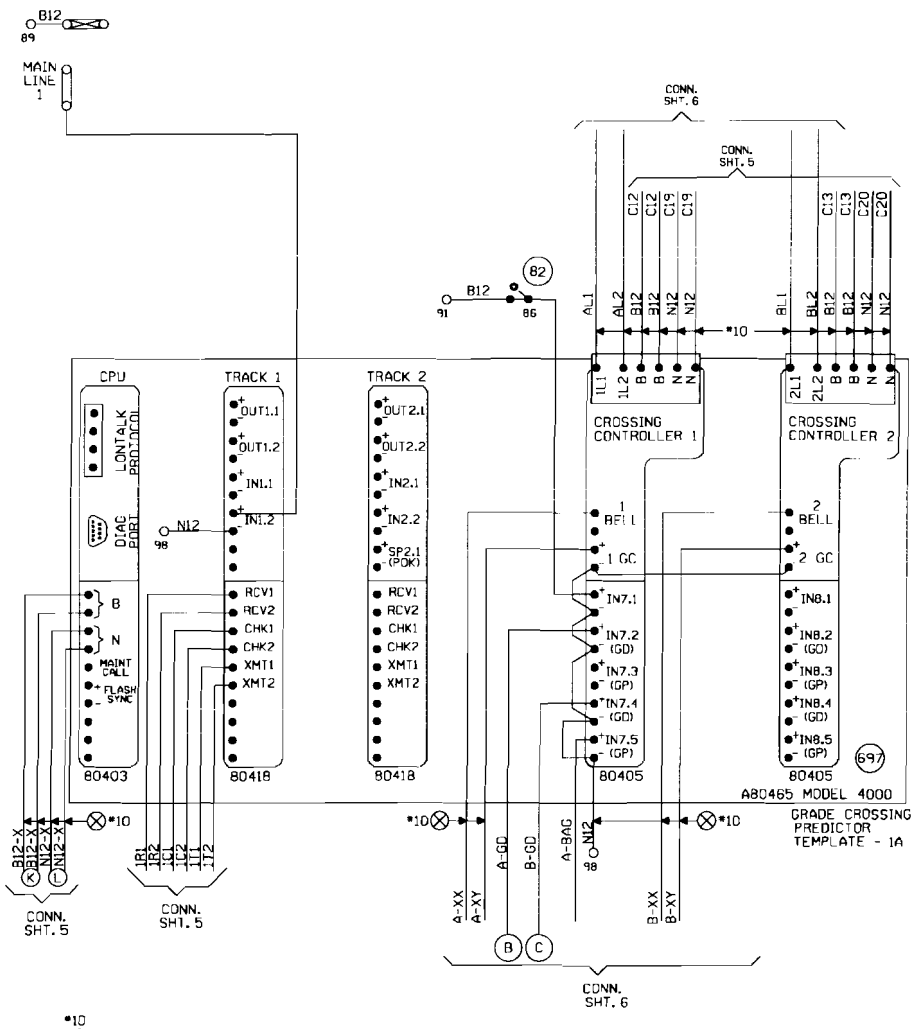

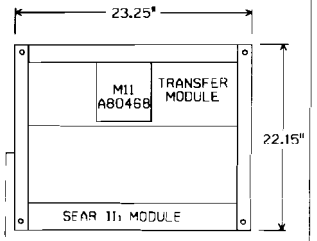

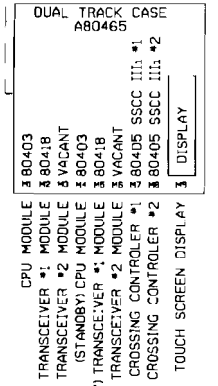

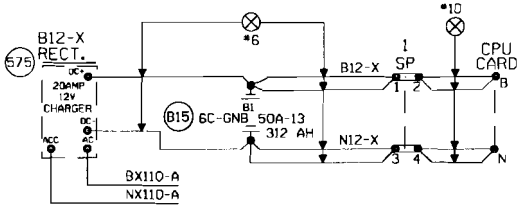

"MF" FREQUENCY (HZ)	MAXIMUM TRANSMIT WIRE LENGTH (FEET)
86	100
114	125
156	150
211	200
285-970	250

NOTE:
EACH TRANSMITTER TO RAIL WIRE FROM XMT1 AND XMT2 MUST NOT EXCEED THE MAXIMUM LENGTH SPECIFIED IN THE TABLE SHOWN. THE RECEIVER WIRE LENGHT IS NOT CRITICAL. DOES NOT APPLY TO 6 TRACK WIRE APPLICATION.

NEW SHEET
DUNLAP, ILLINOIS
CEDAR HILLS ROAD
M.P. 67.70
PEORIA SUBDIVISION
D.O.T.#175 633Y

1	03-30-06	INSTALL FLS/GATES & CONSTANT WARNING AT CEDAR HILLS ROAD M.P. 67.70 A.F.E. 56136	RLT / /CTC/RDO

MODIFICATION LEVEL	
Q. A. LAST LEVEL CHECKED	ON
LAST LEVEL MOD THIS TYPICAL	ON
LAST LEVEL BY DESIGNER	DQ
CHANGED FROM TYPICAL?	Y
sw P4, B1, B6 4K 4K21KGF, 3	

UNION PACIFIC
SAFETY QUALITY PRODUCTIVITY
SIGNAL DESIGN

DES:	CTC
DIG:	CTC
CHK:	RLT
A.F.E.	56136
ID:	STL6770.4X

UNION PACIFIC RAILROAD
DUNLAP, ILLINOIS
HIGHWAY CROSSING SIGNALS
CONTROL CIRCUITS
Office of AVP Engineering - Design Omaha, Nebraska

DATE	03-30-06
SHEET	4
DWG	67.70
	STL

Minimum Program Steps Report

Location and SIN

DOT Number: 175633Y
Milepost Number: 67.70
Site Name: DUNLAP, IL

SIN: 762010010016 *

* Parameter is part of office check number calculation.

MCF and Template Selection

MCF Name: GCP-T6X-01-2.mcf
MCF Revision: 012
MCFCRC: 0DFE7A0C

Template = 1A:6 Trk Bi *

* Parameter is part of office check number calculation.

Minimum Program Steps

TEMPLATE: track 1-Bi, Island
Track 1 : GCP Frequency = 645 Hz
Track 1 : Approach Distance = 2156 ft See Plans
Track 1 : Prime Warning Time = 25 sec *
Track 1 : GCP Transmit Level = Medium Set in Field
Track 1 : Isl Frequency = 10.0 kHz

TEMPLATE: AND 1 XR
AND 1 Enable Used = Yes *

TEMPLATE: IP assignment 1
IN 1.2 = Out Of Service IP 1 *

TEMPLATE: IP assignment SSCC
IN 7.1 = AND 1 XR Enable *

GCP: track 1
Track 1 : Island Distance = 120 ft *

ADVANCED: out of service
OOS Control = OOS IPs *

* Parameter is part of office check number calculation.

Check Numbers

Office Check Number: 0BEDE967
Config. Check Number: 12EA0587
(Based on MCF Revision 012)

Parameters not part of office check number calculation:

Track 1 : GCP Frequency = 645 Hz
Track 1 : Approach Distance = 2156 ft See Plans
Track 1 : GCP Transmit Level = Medium Set in Field
Track 1 : Isl Frequency = 10.0 kHz

Comments

<none>

Configuration Package File

Filename: STL6770_175633Y.pac
Path: Z:\Awaiting W.O. Approvals\up06070-(up08125)\gcp program\
Date/Time:

NEW SHEET
DUNLAP, ILLINOIS
CEDAR HILLS ROAD
M.P. 67.70
PEORIA SUBDIVISION
D.O.T.#175 633Y

1	03-30-06	INSTALL FLS/GATES & CONSTANT WARNING AT CEDAR HILLS ROAD M.P. 67.70 A.F.E. 56136	RLT / /CTC/RDO

NOTE: Actual OFFSET and ISLAND distances must be entered by field personnel.

UNION PACIFIC
QUALITY PRODUCTIVITY SAFETY
SIGNAL DESIGN

DES:	CTC
DIG:	CTC
CHK:	RLT
A.F.E.	56136
ID= STL6770.4AX	

UNION PACIFIC RAILROAD
DUNLAP, ILLINOIS
HIGHWAY CROSSING SIGNALS
CONTROL CIRCUITS
Office of AVP Engineering - Design Omaha, Nebraska

DATE	03-30-06
SHEET	4A
DWG	67.70
	STL

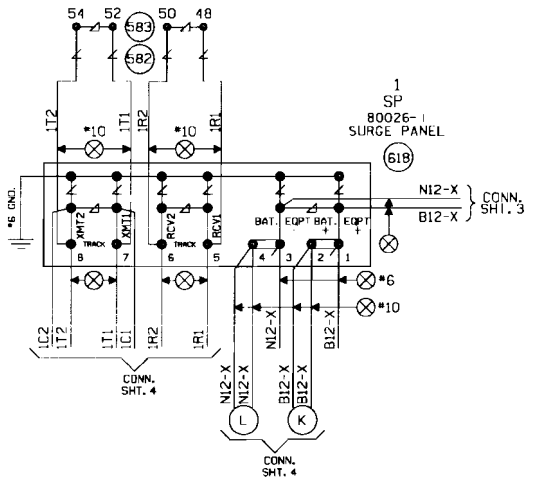

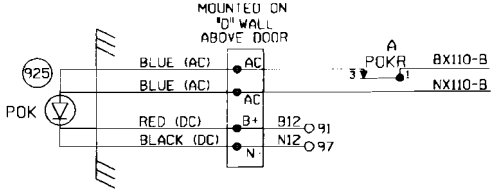

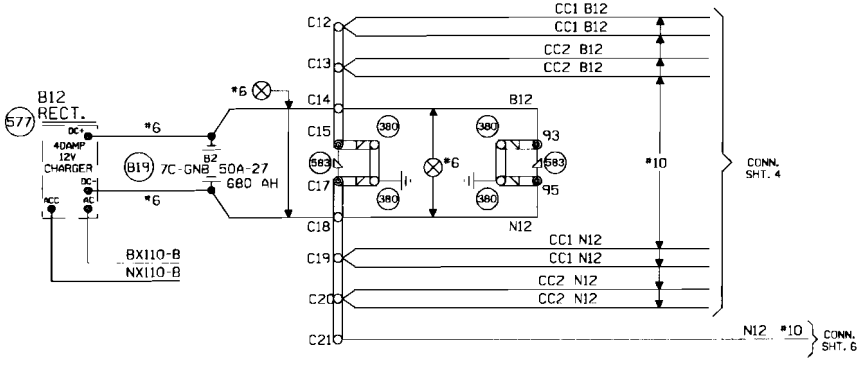

NEW SHEET
DUNLAP, ILLINOIS
CEDAR HILLS ROAD
M.P. 67.70
PEORIA SUBDIVISION
D.O.T.#175 633Y

1	03-30-06	MODIFICATION LEVEL		UNION PACIFIC	DES: CTC	**UNION PACIFIC RAILROAD**	DATE 03-30-06
INSTALL FLS/GATES & CONSTANT WARNING AT CEDAR HILLS ROAD M.P. 67.70 A.F.E. 56136		Q. A. LAST LEVEL CHECKED	DN	QUALITY PRODUCTIVITY SAFETY	DIG: CTC	DUNLAP, ILLINOIS	SHEET 5
		LAST LEVEL MOD THIS TYPICAL	DN		CHK: RLT	HIGHWAY CROSSING SIGNALS	DWG 67.70
		LAST LEVEL BY DESIGNER	DQ		A.F.E. 56136	CONTROL CIRCUITS	STL
/	RLT /CTC/RDD	CHANGED FROM TYPICAL?	Y	SIGNAL DESIGN	ID= STL6770.5X	Office of AVP Engineering - Design Omaha, Nebraska	
		REV 04.01.06 4K 4TKSPGFC.5					

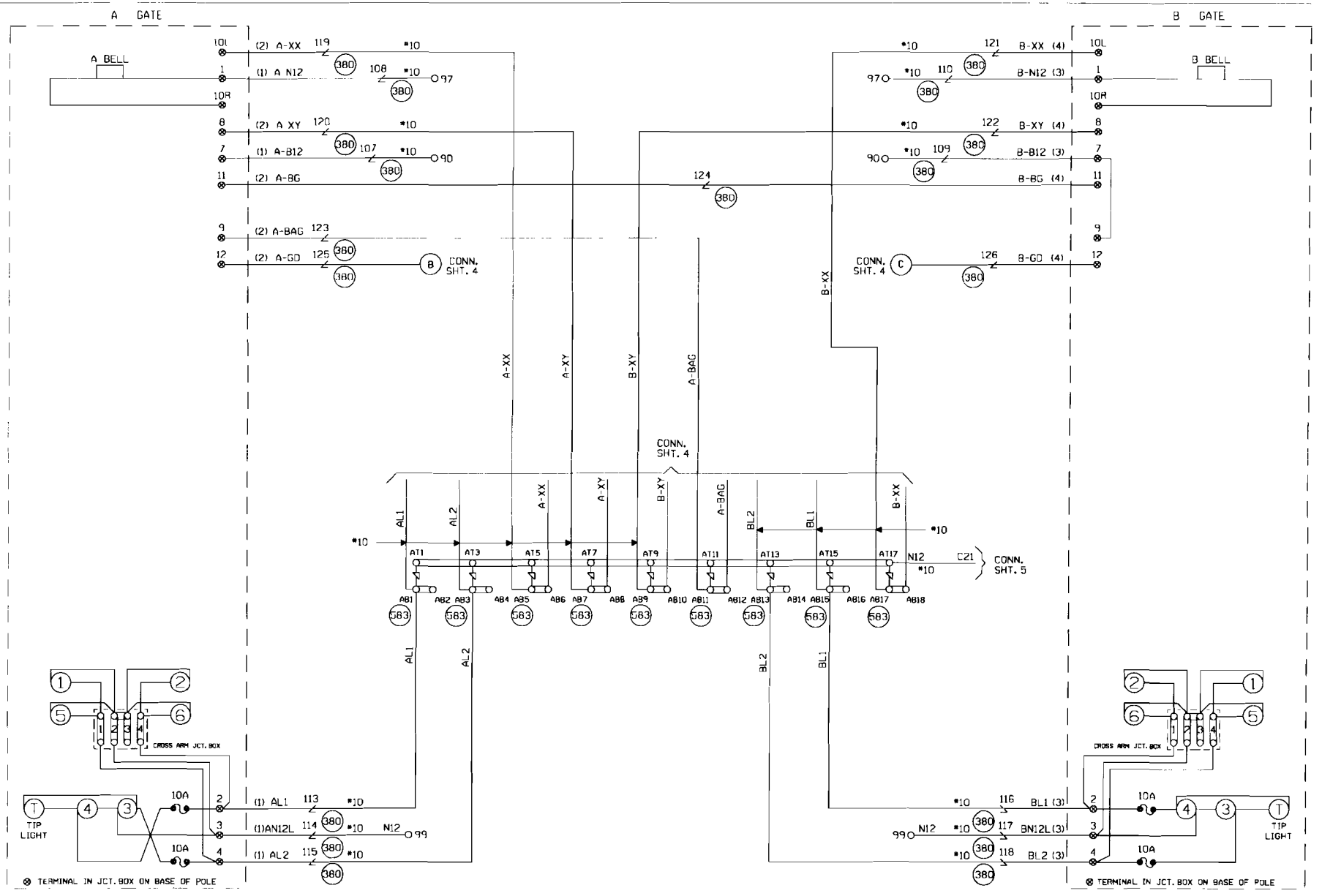

CABLE TABULATION

CABLE NO. 1 5C. NO.6 U.G.B.T.
CABLE NO. 2 7C. NO.14 U.G.B.T.
CABLE NO. 3 5C. NO.6 U.G.B.T.
CABLE NO. 4 7C. NO.14 U.G.B.T.

NEW SHEET
DUNLAP, ILLINOIS
CEDAR HILLS ROAD
M.P. 67.70
PEORIA SUBDIVISION
O.O.T.#175 633Y

1	03-30-06	INSTALL FLS/GATES & CONSTANT WARNING AT CEDAR HILLS ROAD M.P. 67.70 A.F.E. 56136	RLT /CTC/RDD

MODIFICATION LEVEL	
Q. A. LAST LEVEL CHECKED	DN
LAST LEVEL MOD THIS TYPICAL	DN
LAST LEVEL BY DESIGNER	DD
CHANGED FROM TYPICAL?	Y

rev 04.01.06 4K GECTYP.6

UNION PACIFIC
QUALITY PRODUCTIVITY SAFETY
SIGNAL DESIGN

DES:	CTC
DIG:	CTC
CHK:	RLT
A.F.E.	56136
ID= STL6770.6X	

UNION PACIFIC RAILROAD

DUNLAP, ILLINOIS
HIGHWAY CROSSING SIGNALS
CONTROL CIRCUITS

Office of AVP Engineering - Design Omaha, Nebraska

DATE	03-30-06
SHEET	6
DWG	67.70
	STL

WCH 3597

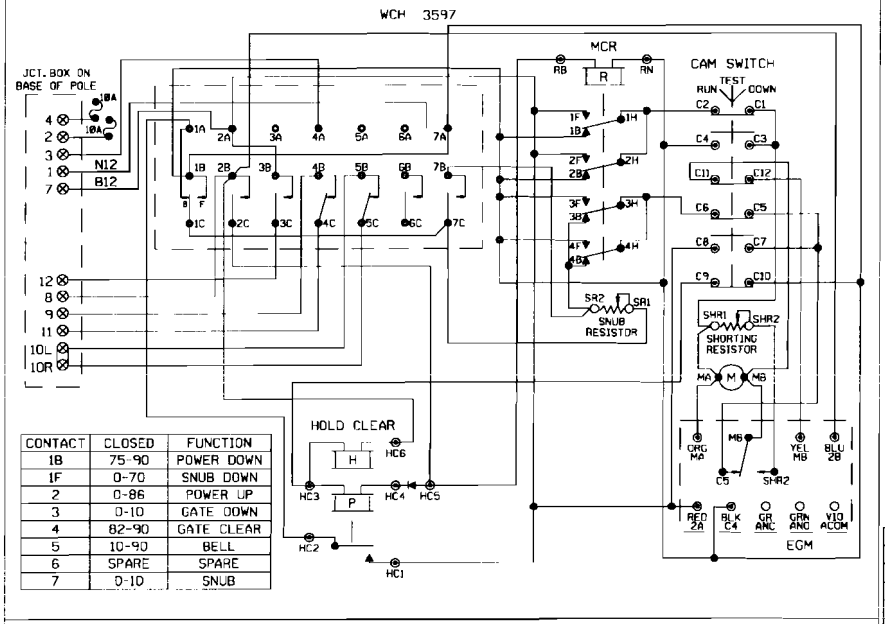

CONTACT	CLOSED	FUNCTION
1B	75-90	POWER DOWN
1F	0-70	SNUB DOWN
2	0-86	POWER UP
3	0-10	GATE DOWN
4	82-90	GATE CLEAR
5	10-90	BELL
6	SPARE	SPARE
7	0-10	SNUB

WCH 3597-RB

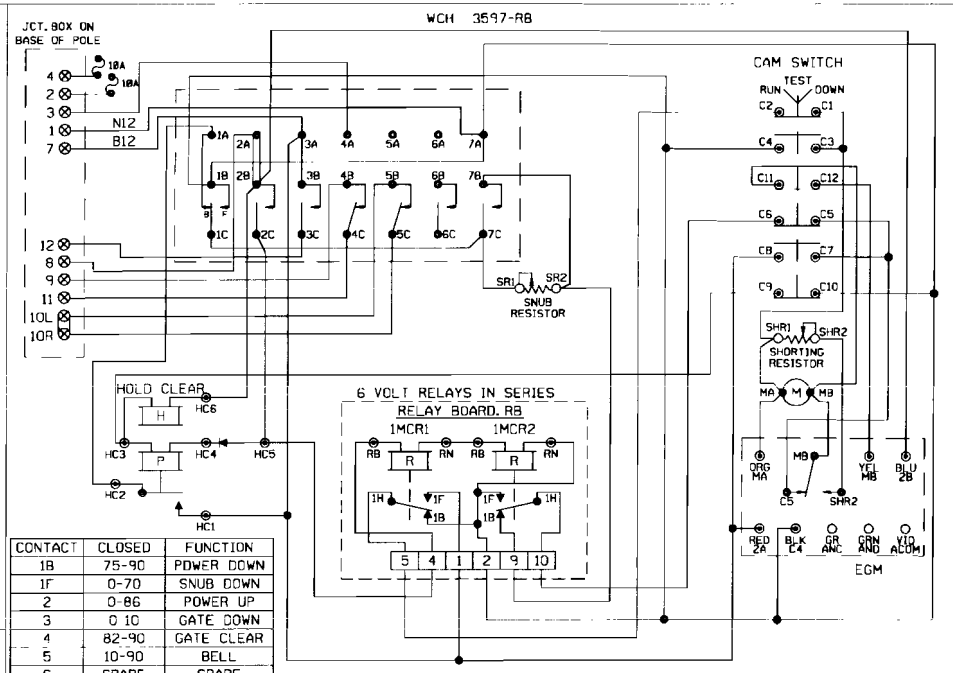

CONTACT	CLOSED	FUNCTION
1B	75-90	POWER DOWN
1F	0-70	SNUB DOWN
2	0-86	POWER UP
3	0-10	GATE DOWN
4	82-90	GATE CLEAR
5	10-90	BELL
6	SPARE	SPARE
7	0-10	SNUB

WCH 3593-F

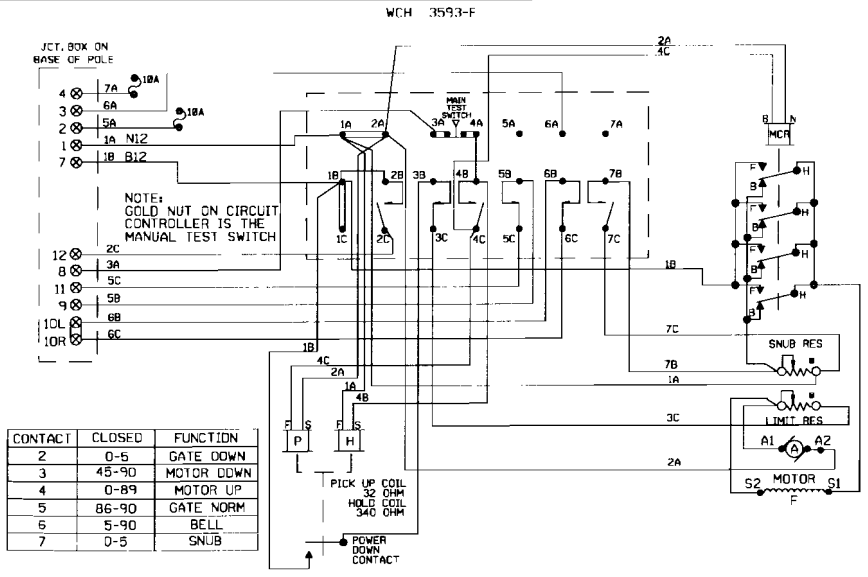

CONTACT	CLOSED	FUNCTION
2	0-5	GATE DOWN
3	45-90	MOTOR DOWN
4	0-89	MOTOR UP
5	86-90	GATE NORM
6	5-90	BELL
7	0-5	SNUB

WCH 3597-E

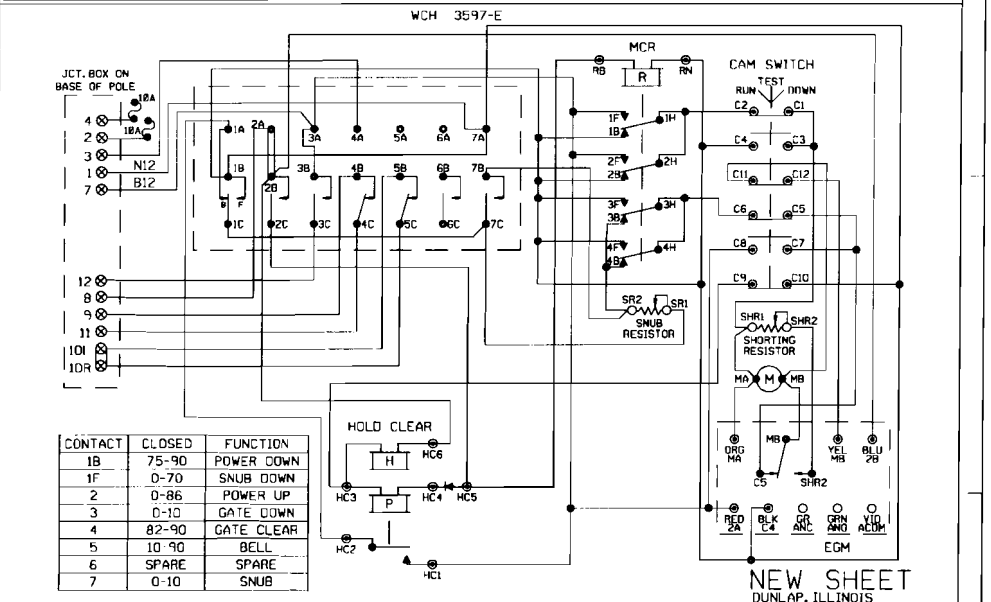

CONTACT	CLOSED	FUNCTION
1B	75-90	POWER DOWN
1F	0-70	SNUB DOWN
2	0-86	POWER UP
3	0-10	GATE DOWN
4	82-90	GATE CLEAR
5	10-90	BELL
6	SPARE	SPARE
7	0-10	SNUB

SHOW TYPE MECH. INSTALLED

ALL MECHANISMS SHOWN IN THE CLEAR POSITION

JCT. BOX ON BASE POLE

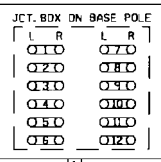

NEW SHEET
DUNLAP, ILLINOIS
CEDAR HILLS ROAD
M.P. 67.70
PEORIA SUBDIVISION
D.O.T.#175 633Y

1	03-30-06	MODIFICATION LEVEL		DES: CTC	**UNION PACIFIC RAILROAD**
INSTALL FLS/GATES & CONSTANT WARNING AT CEDAR HILLS ROAD M.P. 67.70 A.F.E. 56136		Q.A. LAST LEVEL CHECKED	DQ	DIG: CTC	DUNLAP, ILLINOIS
		LAST LEVEL MOD THIS TYPICAL	DQ	CHK: RLT	HIGHWAY CROSSING SIGNALS
		LAST LEVEL BY DESIGNER	DQ	A.F.E. 56136	CONTROL CIRCUITS
	RLT /CTC/RDD	CHANGED FROM TYPICAL?	N	ID= STL6770.7X	Office of AVP Engineering - Design Omaha, Nebraska
		rev 02.01.08 4K OWTRING.DGN			

UNION PACIFIC QUALITY PRODUCTIVITY SAFETY SIGNAL DESIGN

DATE 03-30-06
SHEET 7
DWG 67.70
STL

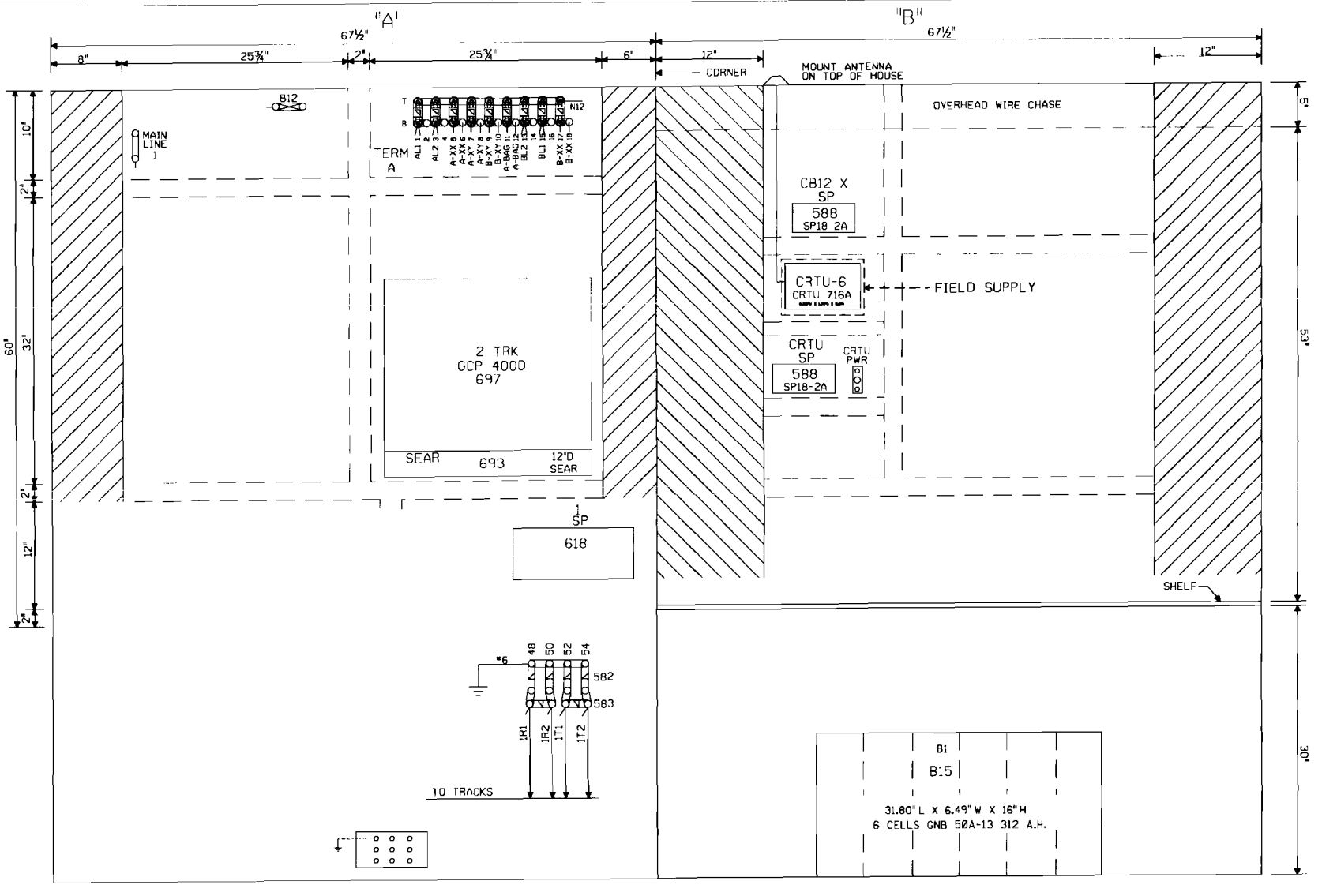

NOTE: ALL DIMENSIONS SHOWN ARE APPROXIMATE.

0 1 2 3 4 FEET

SCALE: 1.5 INCHES = 1 FOOT

NEW SHEET
DUNLAP, ILLINOIS
CEDAR HILLS ROAD
M.P. 67.70
PEORIA SUBDIVISION
D.O.T.#175 633Y

1	03-30-06	MODIFICATION LEVEL		UNION PACIFIC	DES: CTC	UNION PACIFIC RAILROAD	DATE 03-30-06
INSTALL FLS/GATES & CONSTANT WARNING AT CEDAR HILLS ROAD M.P. 67.70 A.F.E. 56136		Q.A. LAST LEVEL CHECKED	DN	QUALITY PRODUCTIVITY SAFETY	DIG: CTC	DUNLAP, ILLINOIS	SHEET 8
		LAST LEVEL MOD THIS TYPICAL	DN		CHK: RLT	HIGHWAY CROSSING SIGNALS	DWG 67.70
		LAST LEVEL BY DESIGNER	DQ		A.F.E. 56136	CONTROL CIRCUITS	STL
	RLT / /CTC/RDD	CHANGED FROM TYPICAL?	Y	SIGNAL DESIGN	ID: STL6770.8X	Office of AVP Engineering - Design Omaha, Nebraska	

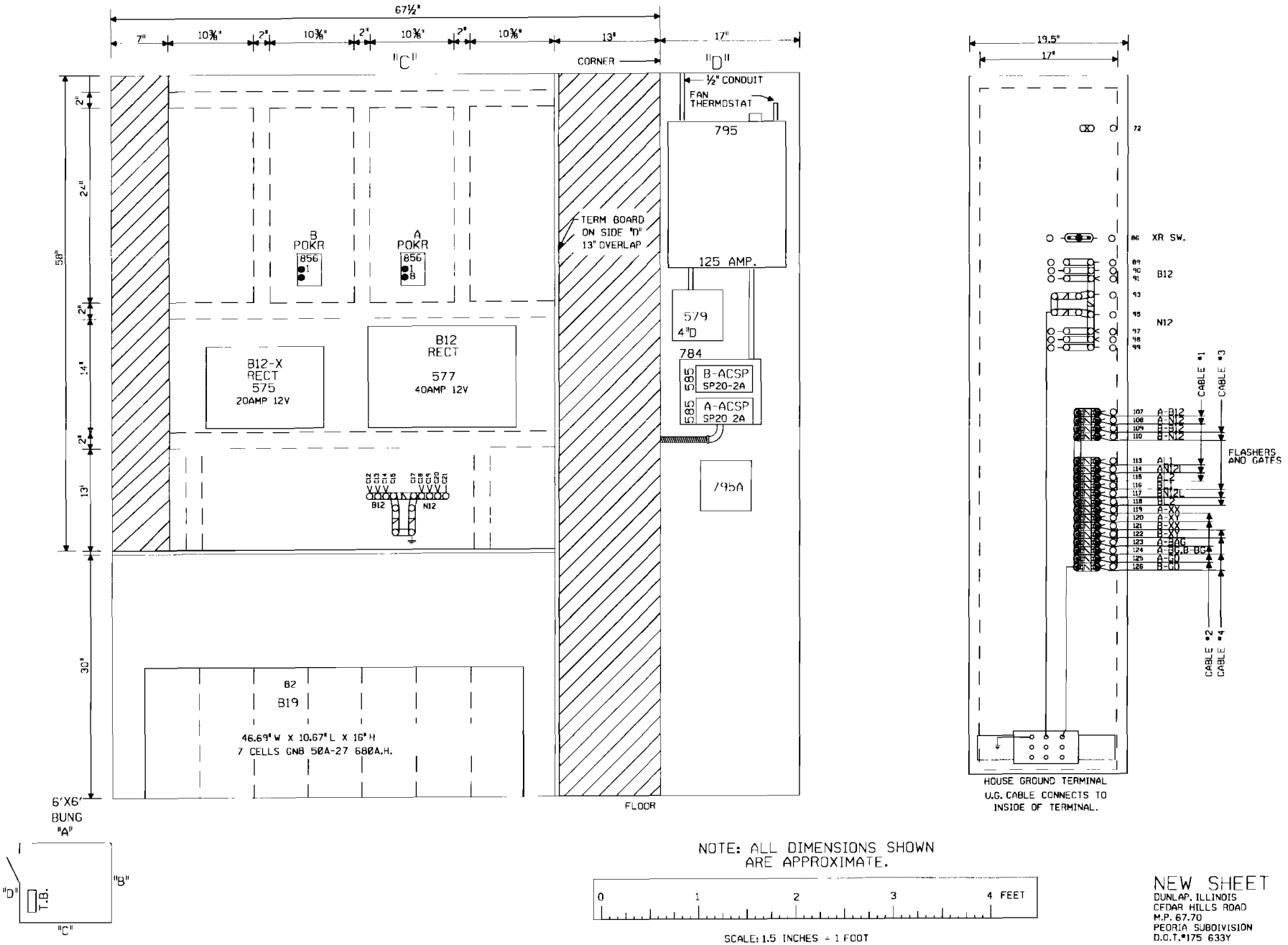

NOTE: ALL DIMENSIONS SHOWN ARE APPROXIMATE.

0 1 2 3 4 FEET

SCALE: 1.5 INCHES = 1 FOOT

NEW SHEET
DUNLAP, ILLINOIS
CEDAR HILLS ROAD
M.P. 67.70
PEORIA SUBDIVISION
D.O.T.#175 633Y

1 03-30-06 INSTALL FLS/GATES & CONSTANT WARNING AT CEDAR HILLS ROAD M.P. 67.70 A.F.E. 56136 RLT / /CTC/RDD	MODIFICATION LEVEL		UNION PACIFIC SAFETY SIGNAL DESIGN	DES: CTC	UNION PACIFIC RAILROAD	DATE 03-30-06
	Q. A. LAST LEVEL CHECKED	DN		DIG: CTC	DUNLAP, ILLINOIS	SHEET 9
	LAST LEVEL MOD THIS TYPICAL	DN		CHK: RLT	HIGHWAY CROSSING SIGNALS	DWG 67.70
	LAST LEVEL BY DESIGNER	DD		A.F.E. 56136	CONTROL CIRCUITS	STL
	CHANGED FROM TYPICAL?	Y		ID= STL6770.9X	Office of AVP Engineering - Design Omaha, Nebraska	

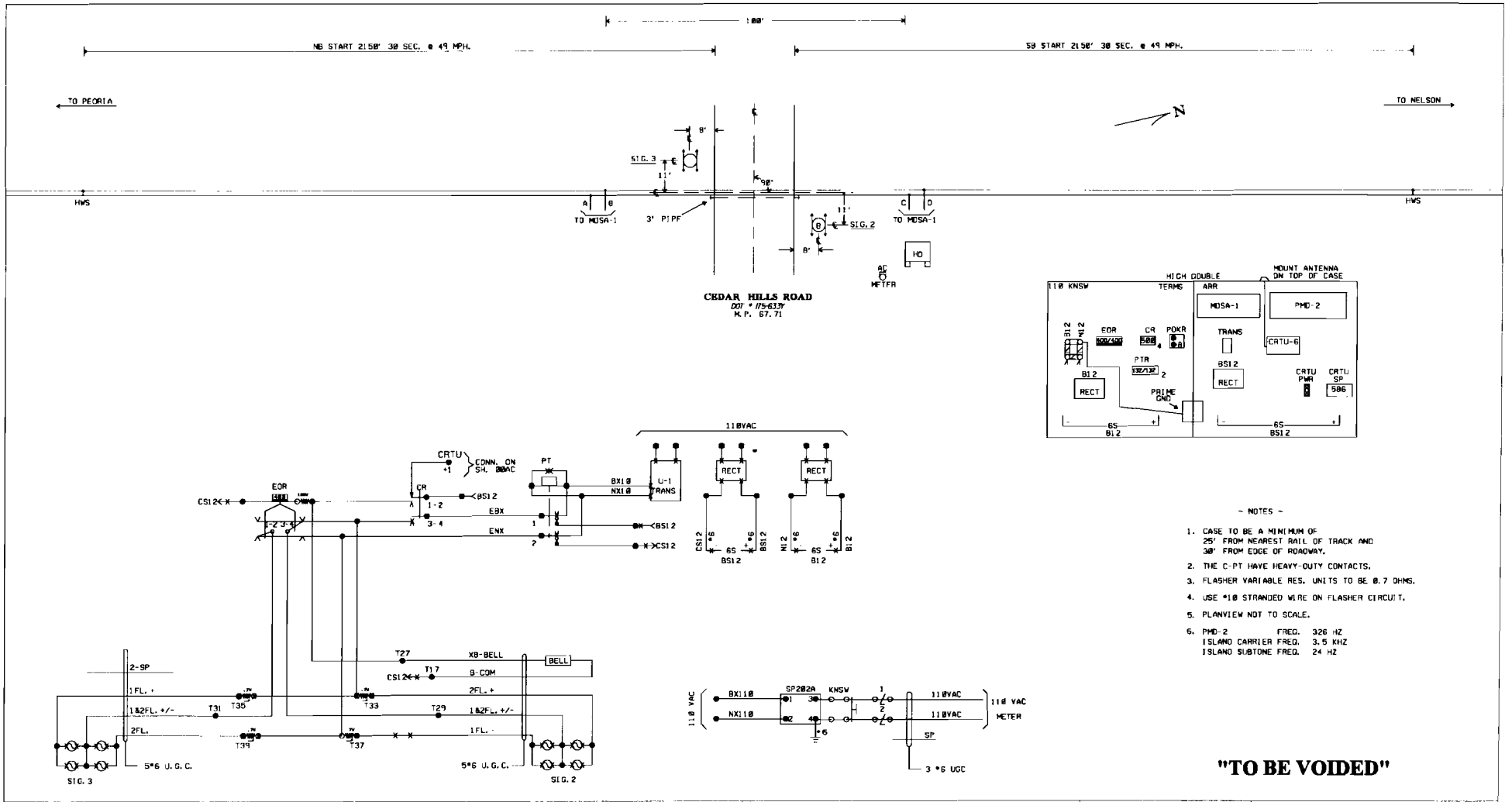

~ NOTES ~

1. CASE TO BE A MINIMUM OF 25' FROM NEAREST RAIL OF TRACK AND 30' FROM EDGE OF ROADWAY.
2. THE C-PT HAVE HEAVY-DUTY CONTACTS.
3. FLASHER VARIABLE RES. UNITS TO BE 0.7 OHMS.
4. USE #10 STRANDED WIRE ON FLASHER CIRCUIT.
5. PLANVIEW NOT TO SCALE.
6. PMD-2 FREQ. 326 HZ
   ISLAND CARRIER FREQ. 3.5 KHZ
   ISLAND SUBTONE FREQ. 24 HZ

"TO BE VOIDED"

REVISIONS

REV. 4-20-98
INSTALL PMD-2
11-3-97
REE/WIT

REV. 5-1-02
INSTALLED CRTU
PER AC.
W.O. 3327
2-8-02
PCM/NST/NST/EM.

3 03-30-06
M.P. 67.70
A.F.E. 56136
/ /CTC/RDD

UNION PACIFIC
QUALITY PRODUCTIVITY SAFETY
SIGNAL DESIGN

AKRON, IL.
CEDAR HILLS RD.
M.P. 67.71

STL06771.00C

SYSTEM*TIME******

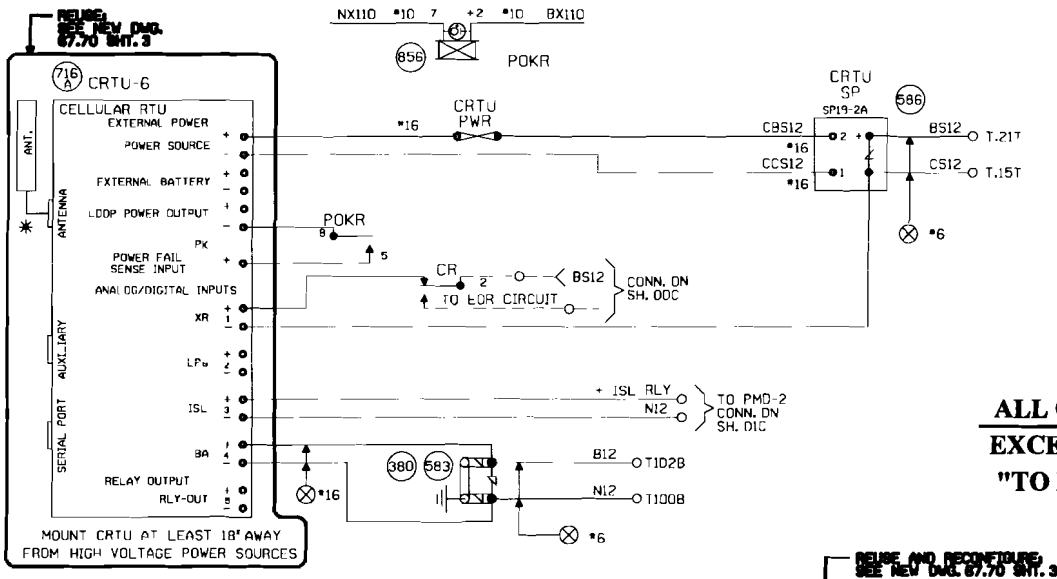

NOTES:
ALL DIODES 1N5060 OR 1N4004 UNLESS OTHERWISE NOTED.
✳ MOUNT ANTENNA ON TOP OF HOUSE.
INSTALL ANTENNA CABLE AND CHOKE PER TECH BULLETIN #99-00255-00
ALL WIRES #18 UNLESS OTHERWISE NOTED.
ALL UNUSED 'NC' INPUTS MUST BE TIED HIGH TO BATTERY
ALL UNUSED ANALOG INPUTS MUST BE TIED HIGH TO BATTERY
ALL UNUSED 'NO' INPUTS MUST BE DISCONNECTED
NORMAL STATE FOR ANALOG CHANNELS IS EQUAL TO THE STORED NOMINAL VOLTAGE +120% OR -81%
CRTU FRONT PANEL DISPLAY CHART INDICATES NORMAL STATE
DIGITAL INPUT HIGH, OR POWER FAIL INPUT CLOSED — DIGITAL INPUT LOW, OR POWER FAIL INPUT OPEN
LATCH IS SET BECAUSE CRTU DETECTED AN ALARM CONDITION
12.06V L
'aRUN MODE' 'aRUN MODE-SILENT'
CRTU RADIO IS DISABLED. REPROGRAM CRTU WITH LAPTOP.
~~ANALOG AND AC INPUT MODULES MUST BE MOUNTED LESS THAN 12" FROM CRTU~~
ANALOG AND AC INPUT MODULES AND SURGE PROTECTORS MUST BE MOUNTED LESS THAN 18" FROM CRTU
ANALOG MODULES CONVERT DC VOLTAGE TO A SQUARE WAVE. A WORKING ANALOG MODULE WILL HAVE 4.5VDC TO 8.0VDC BETWEEN 5VOUT+ AND 5VOUT-. WHERE, 0VOLTS = 0HZ OUT, 30VOLTS = 100KHZ OUT, AND 15VOLTS = 50KHZ OUT
MAKE SURE CRTU IS PROGRAMMED WITH CALIBRATION SETTINGS.
CRTU CH4 CAN BE CONNECTED TO EITHER SP18 OR EQUIPMENT SIDE OF MODAL, TAB 586

ALL OUT
EXCEPT AS SHOWN
"TO BE VOIDED"

REUSE AND RECONFIGURE, SEE NEW DWG. 67.70 SHT. 3

UNIT INSTALLATION AND SETUP

R.R. SITE ID WHERE: SSSS = 4 CHARACTER SUBDIVISION ID. FILL WITH PRECEDING ZEROS AS REQUIRED. THE MAIN TRACK SUBDIVISION ID* IS IN THE CURRENT TIMETABLE. INDUSTRIAL LEADS, LEASED, AND LEAD TRACKS LISTED WITHIN THE SUBDIVISION MAY HAVE THEIR OWN UNIQUE SUBDIVISION ID*. ~~NO AUTOMATICALLY USE [illegible] SUBDIVISION ID FOR THESE OTHER TRACKS. ALWAYS [illegible] REFER TO THE WITH THE MOST~~ CURRENT PRINTED COPY OF THE TIMETABLE.
LLLLLLLLL = 8 CHARACTERS USE DOT* AT CROSSINGS, AND USE [illegible] SPACES.
MMMMMMMM = USE "MP" THEN MP* AT MAINLINE LOCATIONS. EXAMPLE = [illegible]
NNNNNNNN = USE "NP" THEN NP* AT NBD SETUP. EXAMPLE = [illegible]
THE MP* MUST USE A DECIMAL POINT TO SEPARATE NUMBERS. FILL WITH PRECEDING DASHES AS REQUIRED.
AA = 2 CHARACTER STATE NAME FOR ~~CROSSINGS~~. ALL LOCATIONS. ~~[illegible]~~
MUST BE 14 CHARACTERS LONG, NO SPACES ALLOWED.

SITE IDENTIFIER: SSSSLLLLLLLLAA	0019-175633YIL
OPERATION TO RESUME: RUN	
SIGNAL STRENGTH dBm	
CARRIER ID	
FIRMWARE VERSION	2.3
SERIAL NUMBER	
BOOT VERSION	
CHM VERSION	
PEM ASSEMBLY	
BBx DISCRIMINATOR (ONLY)	
CONFIGURATION NET	MICROBURST
SILENCE INTERVAL	60 MINUTES
HEALTHCHECK INTERVAL	EVERY 2 DAYS
ALARM DEFER DELAY	240 MINUTES (4 HOURS)
SIGNAL STATUS	
SCADANET STATUS	
CALIBRATION CONSTANT CH0	
CALIBRATION CONSTANT CH2	
CALIBRATION CONSTANT CH3	
CALIBRATION CONSTANT CH4	
CALIBRATION CONSTANT P0	

FIELD PROVIDES: SAMPLED NOMINAL VOLTAGES, SCADANET STATUS CALIBRATION CONSTANTS, SERIAL NUMBER, AND SIGNAL STATUS.

CHANNEL SETUP - STANDARD CONFIGURATION

CHANNEL NORMAL STATE	SENSE (NO/NC)	NAME FUNCTION	RECOGNITION DELAY SECONDS ACTIVE	RECOGNITION DELAY SECONDS NORMAL	RETURN TO NORMAL	REPORTING MODE	ALARM LINKED CHANNEL	ALARM LINKED CRITERIA	EVENT LOGGING ENABLED OPTIONS
POWER FAIL (CH5)	POWER FAIL DETECT NO	PF1n-PK AC POWER FAIL	7,200 ALARM	300 NORMAL	ENABLED	ALERT	DISABLED	N/A	ANALOG VALUE SENT
CH1	DIGITAL INPUT NC	CH1-XR XR DOWN TO LONG	1,800 ALARM	1 NORMAL	ENABLED	ALERT	DISABLED	N/A	
CH2	DIGITAL INPUT NO	~~CH2-LPa LIGHT OUT GATES NOT UP/DOWN WRNG CNTRLR FAILED~~ CH2-BBa LIGHT OUT	120 ALARM	10 NORMAL	ENABLED	ALERT	DISABLED	N/A	
CH3	DIGITAL INPUT NO	~~CH3-ISL ISLAND OCCUPIED DAX PREEMPT WARNING TIME~~ CH3-BTa BATT NOT UP/COMM	120 ALARM	10 NORMAL	~~ENABLED~~ ~~DISABLED~~	~~ALERT STATUS ONLY~~	DISABLED	N/A	DIGITAL EVENTS
CH4 STORED NOMINAL VOLTAGE	ANALOG INPUT N/A	CH4-BA/V BATTERY MONITOR BATTERY LOW	600 ALARM	1200 NORMAL	~~ENABLED~~ ~~DISABLED~~	ALERT W/UPDATE	DISABLED	N/A	~~CH4-XR CH3-PK~~ PFin-PK CH2-XR CH3-BTa CH0-BTa
POWER SOURCE (CH6)	ANALOG INPUT N/A	PS-BA/V BATTERY MONITOR BATTERY LOW	600 ALARM	1200 NORMAL	~~ENABLED~~ ~~DISABLED~~	ALERT W/UPDATE	DISABLED	N/A	

ANALOG CHANNEL	USEFUL RANGE VOLTS LOW	USEFUL RANGE VOLTS HIGH	DISPLAYED RANGE VOLTS LOW	DISPLAYED RANGE VOLTS HIGH	RELATIVE ALARM POINT LOW	RELATIVE ALARM POINT HIGH	ABSOLUTE ALARM POINT LOW	ABSOLUTE ALARM POINT HIGH	AUTOMATIC UPDATE INTERVAL	STORED NOMINAL VOLTAGE	SAMPLED NOMINAL VOLTAGE
CH4	0.0	30.00	0.0	30.00	81%	120%	10.0	29.0	~~DISABLED~~ 14 DAYS	12.69	
POWER SOURCE	0.0	30.00	0.0	30.00	81%	120%	10.0	29.0	~~DISABLED~~ 14 DAYS	12.69	

RELAY OUTPUT	NAME RLY-OUT	ACTIVE SET-UP-OPEN	NORMAL CLR-ON-CLOSE	PULSE DURATION	15 SECONDS	~~[illegible]~~

SwDfg Ver 2.3.3 REV'D 9-20-02

MAINTENANCE OPERATIONS

TO START OR ABORT ANY PROCEDURE

1. PRESS THE 'CANCEL' BUTTON FIRST

WHEN RESPONDING TO A CALL, PUT THE CRTU IN THE 'SILENCE ALARMS' MODE

1. PRESS 'SELECT' AND THEN '+ ARROW' BUTTON UNTIL
   DISPLAY: ACTION? SILENCE ALARMS
2. PRESS THE 'SELECT' BUTTON TWICE
3. CORRECT PROBLEM AND SIMULATE NORMAL TRAIN MOVEMENT THROUGH THE LOCATION
4. EXAMINE EACH CHANNEL ON THE CRTU
5. PRESS THE '+/- ARROW' BUTTON
   VERIFY ALL CHANNELS INDICATE A NORMAL STATE
   NORMAL STATES ARE ON THE CHANNEL SETUP CHART

CLEAR TIMERS, LATCHES AND SEND ALL NORMAL

1. DO STEPS #1 - #5 ABOVE, AND PRESS 'CANCEL'.
2. PRESS 'SELECT' AND THEN '- ARROW' BUTTON UNTIL
   DISPLAY: ACTION? SERVICE MODE
3. PRESS 'SELECT' AGAIN TO RESET TIMERS, AND IF
   DISPLAY: SERVICE MODE ALL NORMAL
4. PRESS 'SELECT' AGAIN TO CLEAR LATCHES, AND SEND ALL NORMAL. SKIP STEPS #5-#6.
5. HOWEVER, IF ALARMS ARE NOT CLEARED;
   DISPLAY: SERVICE MODE ALARMS PENDING/PRESENT
6. PRESS 'CANCEL', CORRECT PROBLEM AND REPEAT STEPS #2 THRU #5 UNTIL ALL NORMAL SENT.

TO CANCEL THE 'SILENCE ALARMS' MODE

1. PRESS 'SELECT' AND THEN '+ ARROW' BUTTON UNTIL
   DISPLAY: ACTION? CANCEL SILENCE
2. PRESS THE 'SELECT' BUTTON AGAIN

EXAMINE & SET BATTERY VOLTAGE NOMINAL VALUE

1. PRESS THE '+ ARROW' OR '- ARROW' BUTTON UNTIL THE DESIRED CHANNEL IS DISPLAYED.
   DISPLAY: PS-BA: 13.83V NORMAL
2. VERIFY THE DISPLAYED READING WITH A DIGITAL VOLTMETER
3. PRESS THE 'SELECT' BUTTON, AND THE CRTU DISPLAY WILL SWITCH BETWEEN CURRENT/SAVED NOMINAL VOLTAGE VALUES.
   DISPLAY: NOMINAL ON #6? (CURRENT) 13.83
   DISPLAY: SAVED NOMINAL 6 (STORED) 12.69
4. PRESS THE 'SELECT' BUTTON AND THE CURRENT OR 'NOMINAL ON' VALUE WILL BE SAMPLED AND STORED AS THE 'SAVED NOMINAL' VALUE
5. VERIFY THE 'NOMINAL ON' AND 'SAVED NOMINAL' VALUES ARE EQUIVALENT, REPEAT STEPS #1 THRU #3 & PRESS THE 'CANCEL' BUTTON.

DUNLAP, ILLINOIS
CEDAR HILLS RD.
M.P. 67.71
PEORIA SUBDIVISION
O.D.T.#175 633Y

2	03-30-06	1	REV. 5-1-02
M.P. 67.70 A.F.E. 56136		INSTALLED CRTU PER AC. W.O. 3327 2-8-02	
/	/CTC/ROD	PCM/NST/NST/EML	

MODIFICATION LEVEL	
Q.A. LAST LEVEL CHK'D.	
LAST LEVEL MOD. THIS TYP.	
LAST LEVEL BY DESIGNER.	
CHANGED FROM TYP.? Y/N	

UNION PACIFIC — QUALITY PRODUCTIVITY SAFETY — SIGNAL DESIGN

DES: NST
DIG: NST
CHK:
A.F.E. 3327
ID: STL06771.00AC

UNION PACIFIC RAILROAD
DUNLAP, ILLINOIS
HIGHWAY CROSSING SIGNAL CIRCUITS
OFFICE OF CHIEF ENG'R — OMAHA NEBR.

DATE 8-15-01
SHEET 00AC
DWG 67.71
STL

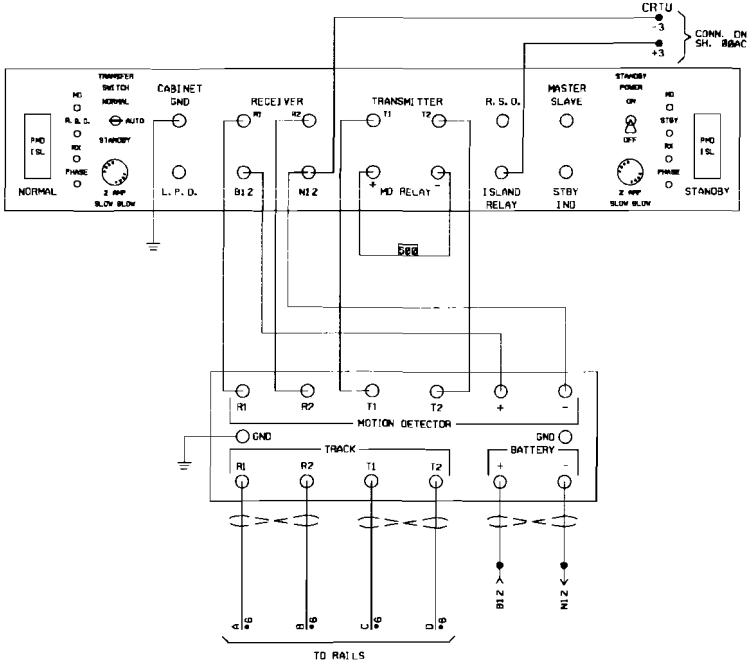

PMD-2 SWITCH OPTION TABLE

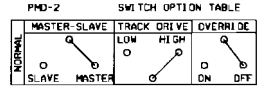

PMD-2 FREQ. 326 HZ
ISLAND CARRIER FREQ. 3.5 KHZ
ISLAND SUBTONE FREQ. 24 HZ

- NOTES -

1. PMD-2 AND MDSA-1 SHOULD BE LOCATED AS CLOSE AS POSSIBLE TO KEEP LEAD LENGTH TO A MINIMUM.
2. TRANSMITTER (T1 &T2) WIRES MUST BE CONNECTED TO BUNGALOW SIDE OF CROSSING.

WIRING REQUIREMENTS

THE FOLLOWING WIRE GAUGES WILL BE CONSIDERED THE MINIMUM ACCEPTABLE FOR PROPER OPERATION.

POWER LEADS	* 10 (MUST BE TWISTED)
CONNECTIONS FROM PMD CABINET TO MDSA-1	* 10 AWG (WIRES ON TERMS R1, R2 T1 & T2 MUST BE TWISTED.)
TRACK LEADS	* 6 AWG (ALL WIRES MUST BE TWISTED & WELDED.)
RELAY OUTPUT & AUXILIARY INPUT	* 14 (MUST BE TWISTED)
GROUND WIRE FROM MDSA-1 TO CASE	*6 AWG DIRECTLY TO PRIME GROUND TERMINALS (NO SHARP BENDS)

"TO BE VOIDED"

REVISIONS

REV. 4-20-98
INSTALL PMD-2
11-3-97
REE/WITT

REV. 5-1-02
INSTALLED CRTU
PER AC.
W.O. 3327
2-8-02
PCM/NST/NST/EML

3 03-30-06
M.P.67.70
A.F.E.56136
/ /CTC/RDD

UNION PACIFIC
QUALITY PRODUCTIVITY SAFETY
SIGNAL DESIGN

AKRON, IL.
CEDAR HILLS RD.
M.P. 67.71

STL06771.01C

SYSTEM#TIME#####