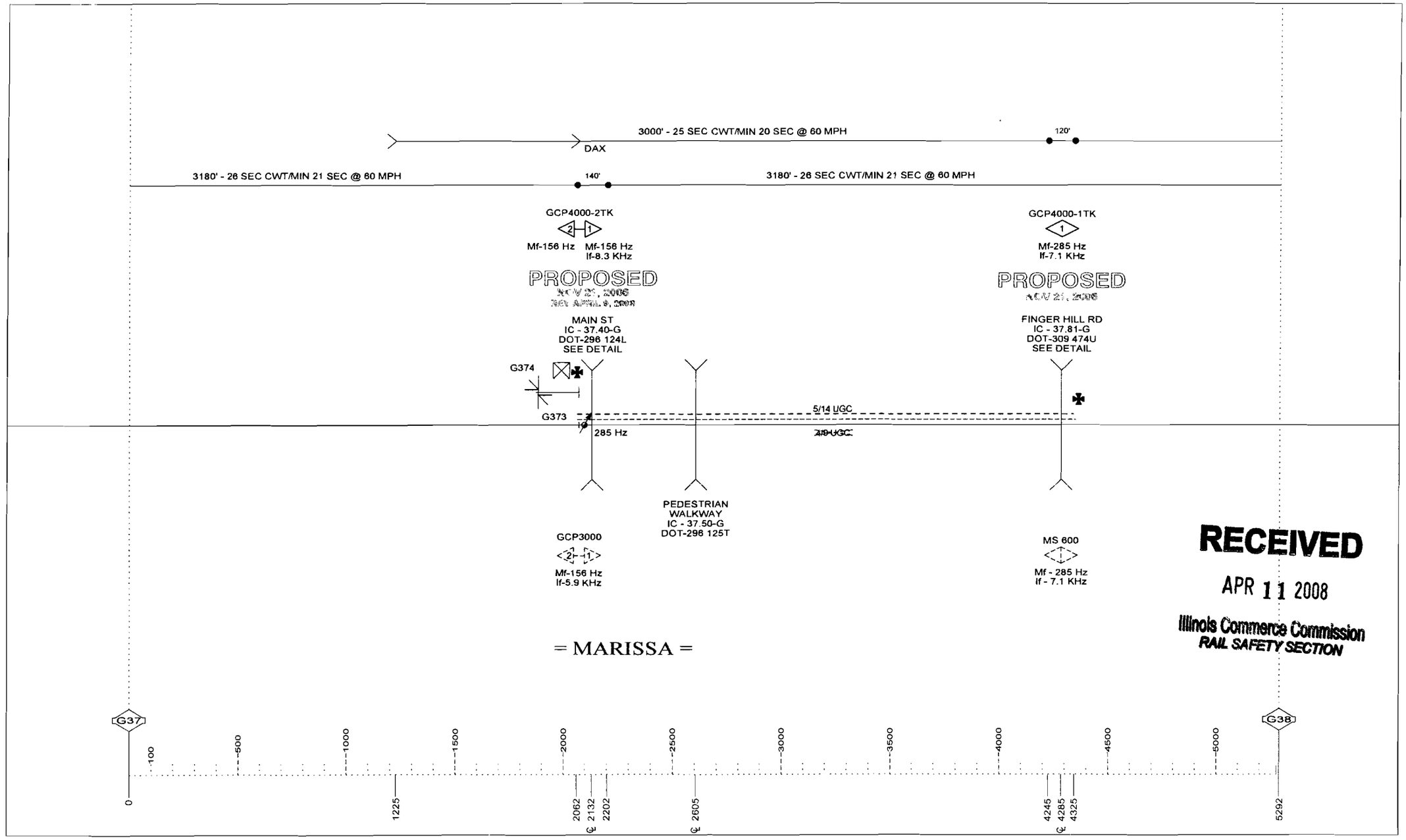

RECEIVED
APR 11 2008
Illinois Commerce Commission
RAIL SAFETY SECTION

SD 1021 - MP 36 TO 37

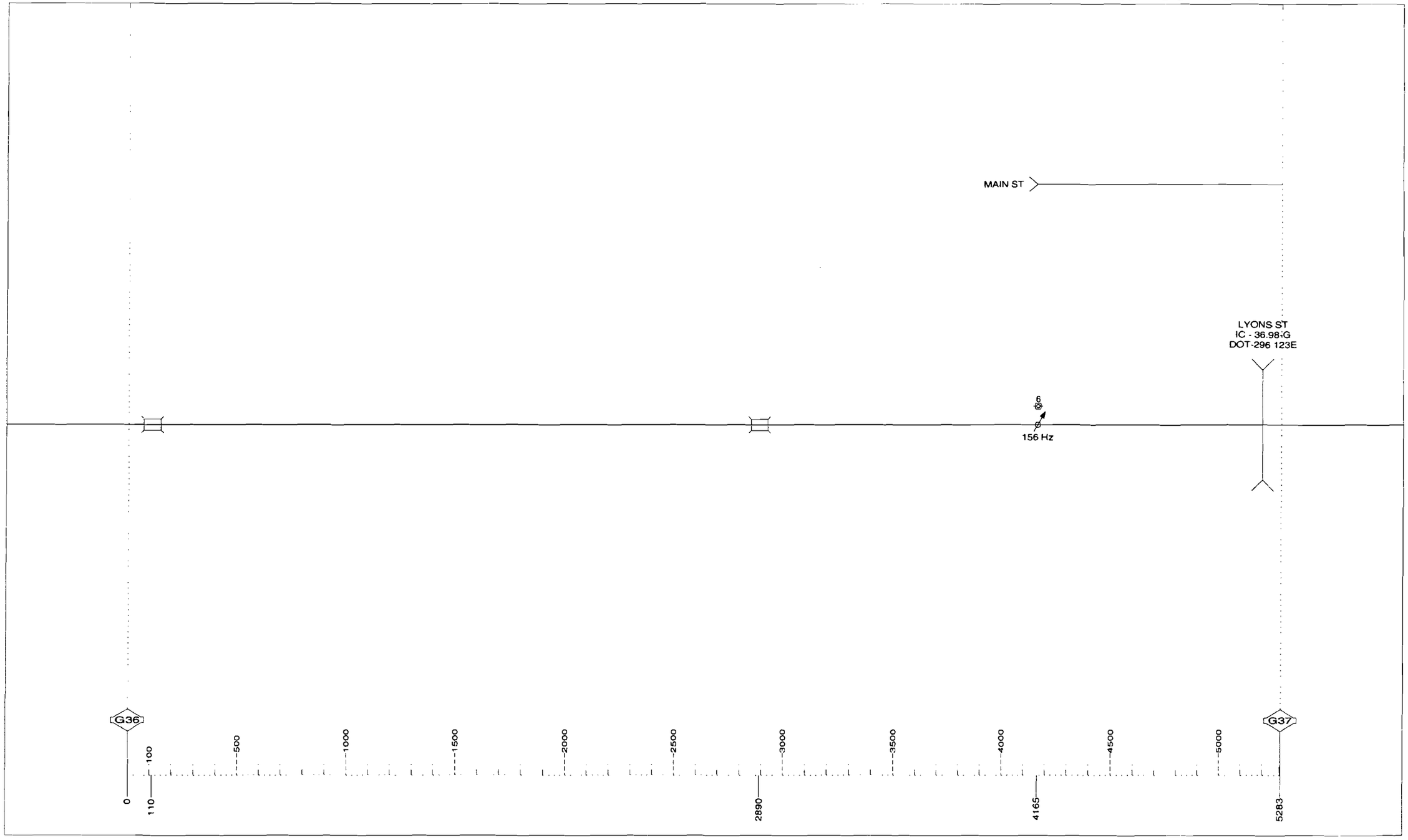

DRAWING SCALE 1" = 500'

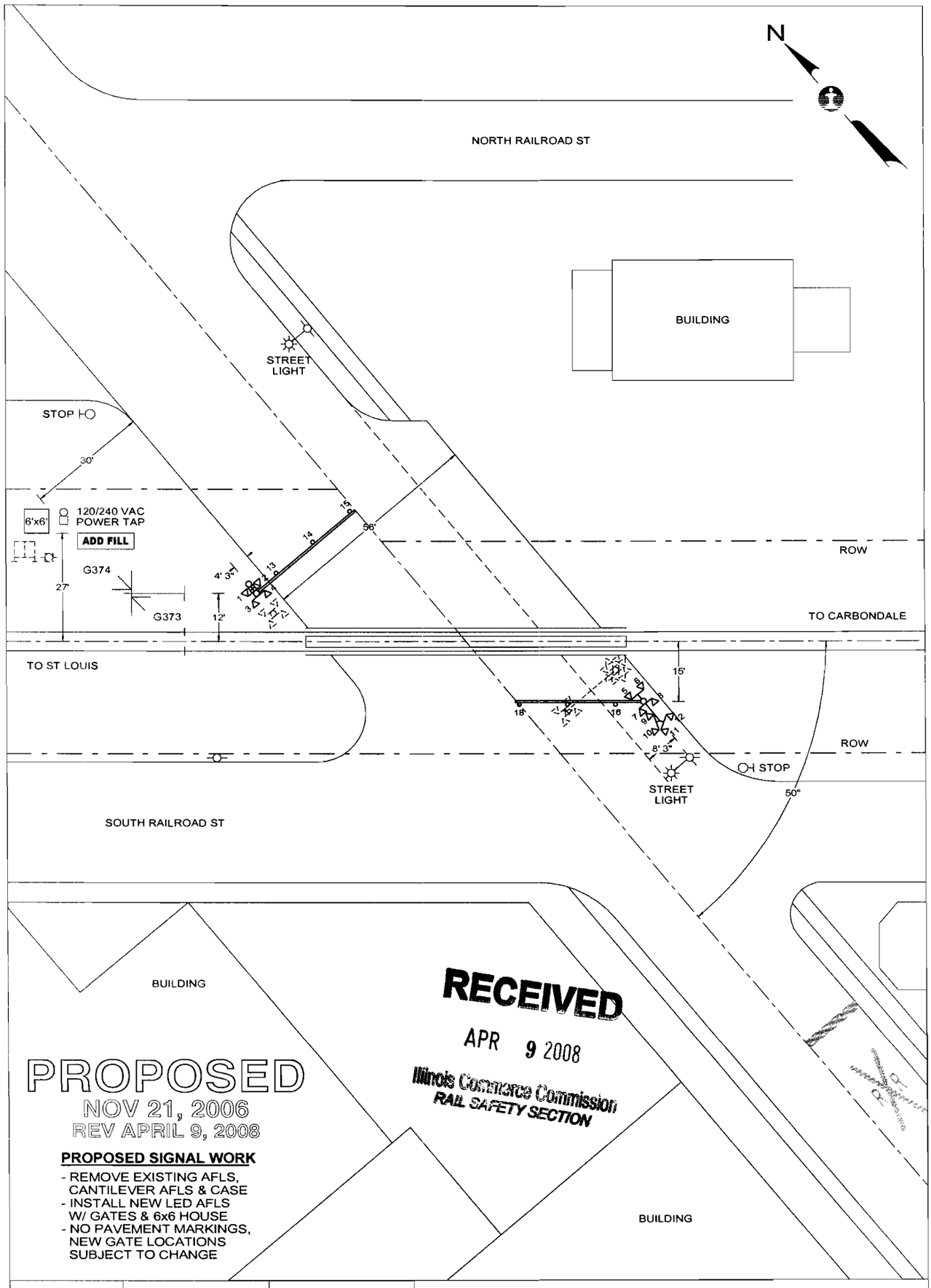

RECEIVED
APR 9 2008
Illinois Commerce Commission
RAIL SAFETY SECTION

PROPOSED
NOV 21, 2006
REV APRIL 9, 2008

PROPOSED SIGNAL WORK

- REMOVE EXISTING AFLS, CANTILEVER AFLS & CASE
- INSTALL NEW LED AFLS W/ GATES & 6x6 HOUSE
- NO PAVEMENT MARKINGS, NEW GATE LOCATIONS SUBJECT TO CHANGE

QUADRANT	NW	SE
STANDARD AFLS	LED	LED
CANTILEVER, FT.	-	-
GATE, FT.	32	32
ADDED LIGHTS	-	110° - 315°
BARRICADE	-	-
MULTI-TK SIGN	-	-
BELL	X	-
REVISIONS		

E:\DWG\STL\03740X CAD

CN — SIGNALS & COMMUNICATIONS, ENGINEERING DEPARTMENT

CITY & STATE	MARISSA, IL	SD	1021 X
CROSSING	MAIN ST	DATE	NOV 21, 2006
IC -	37.40-G	DOT -	296 124L
MIDWEST	DIVISION	ST LOUIS	SUBDIVISION
IN SERVICE	2/6/1951	SCALE	1"=30'
DRAWN BY	AVS		

$WATERMARK

NO.	DATE	BY	REVISIONS DESCRIPTION	APP. BY
1				
2				
3				
4				
5				

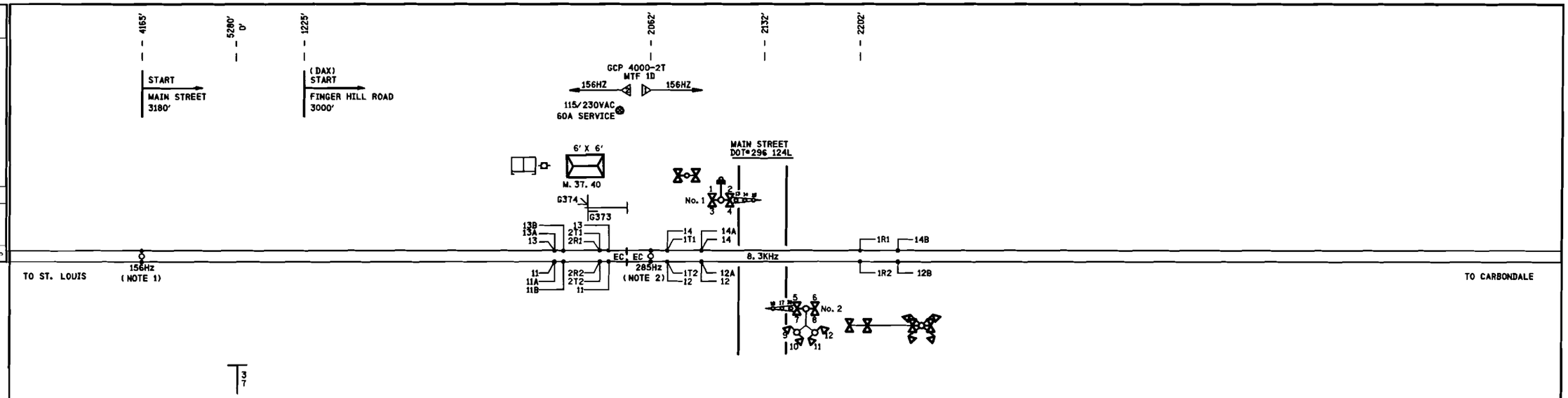

NOTES:

1) DENOTES MULTI-FREQ. NARROW BAND SHUNT 62775-8621.

2) DENOTES MULTI-FREQ. NARROW BAND SHUNT 62775-1543 WITH DUMMY TRACK LOAD 8V617-0800.

PROPOSED
DES. No. _____
RED-IN YELLOW-OUT
AS INSTALLED
DATE _____
BY _____

6' X 6' BUNGALOW

PROPOSED D	M	Y	REVISIONS	D	C	COMPLETED D	M	Y	C

DIVISION MIDWEST
SUB. ST. LOUIS
SD. 1021 C
MP. 36.00 TO 37.60

SIGNALS AND COMMUNICATIONS
EDMONTON, ALBERTA
25 FEBRUARY 2008

DES. PEA
CH. RLC

TRACK LAYOUT
MAIN STREET
MARISSA, IL

M 03600C01

SAFETRAN SYSTEM CORP.
LOUISVILLE DIVISION, LOUISVILLE, KY

$FILENAME
$DATE

SAFETRAN SYSTEMS CORPORATION

DES. : PEA	DATE: 02/25/08	JOB NO. : PICA10146A	
DKD. : RLC	ISSUE DATE: N/A	EST. NO. :	
DRN. : PEA	PLAN NO. :N/A	SHEET N/A OF N/A	
P. TIME:14:34	P. DATE: 19-MAR-2008	CAD ID. :03600C01	

$WATERMARK

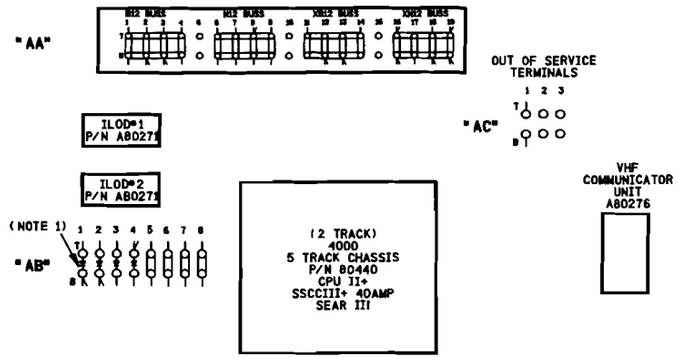

SIDE" A"

NOTE:
1) ⊣⊢ DENOTES RECTIFIER : (SAFETRAN# 8008A299006)

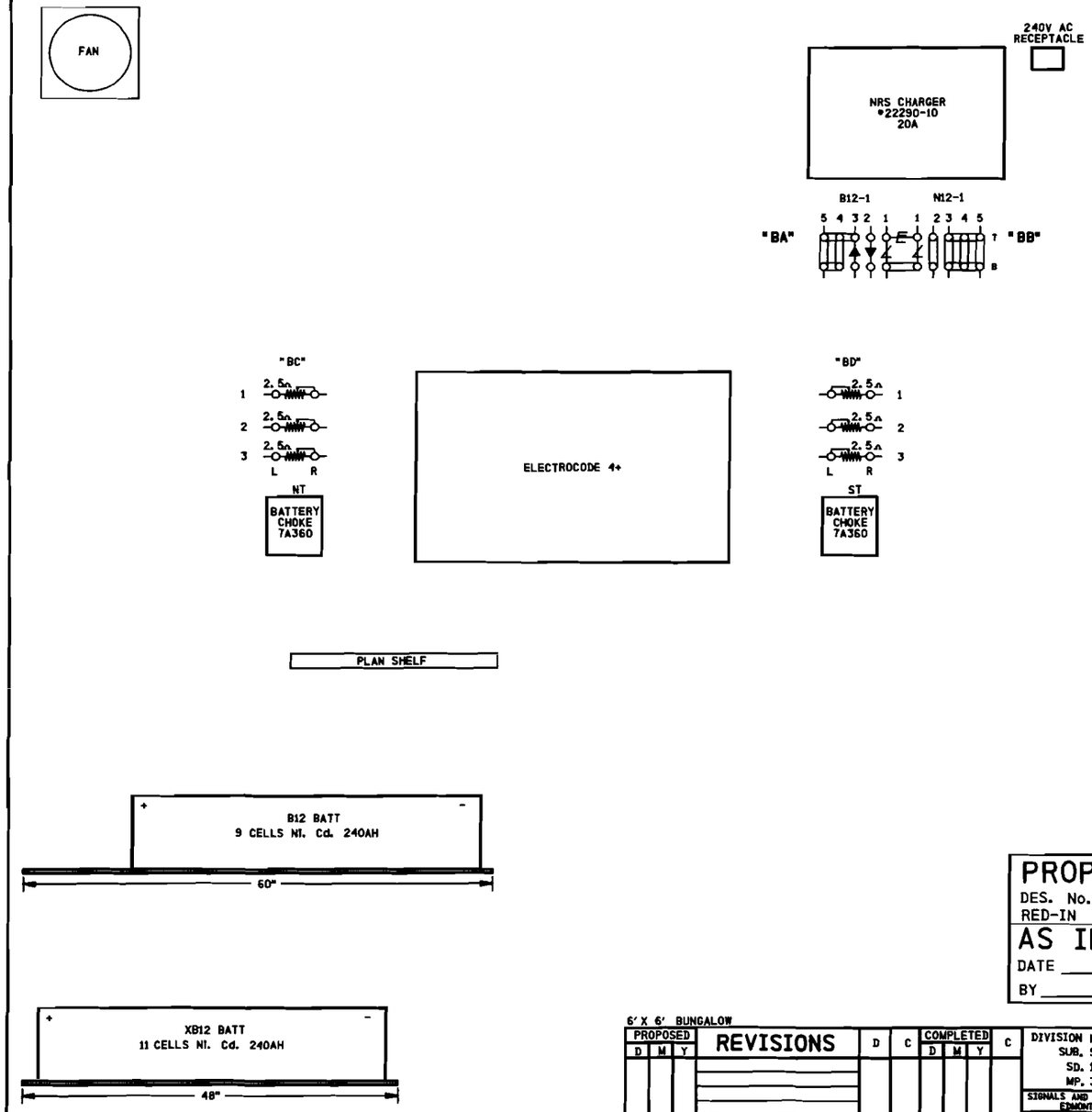

SIDE" B"

PROPOSED
DES. No. _____
RED-IN YELLOW-OUT
AS INSTALLED
DATE _____
BY _____

6' X 6' BUNGALOW

PROPOSED D	M	Y	REVISIONS	D	C	COMPLETED D	M	Y	C

DIVISION MIDWEST
SUB. ST. LOUIS
SD. 1021 C
MP. 36.00 TO 37.60

SIGNALS AND COMMUNICATIONS EDMONTON, ALBERTA
25 FEBRUARY 2008

DES. PEA
CH. RLC

BUNGALOW LAYOUT
SIDE "A" & "B"
MAIN STREET
MARISSA, IL

M 03600C02

SAFETRAN SYSTEM CORP.
LOUISVILLE DIVISION, LOUISVILLE, KY

REVISIONS			
NO.	DATE	BY	DESCRIPTION	APP. BY
1				
2				
3				
4				
5				

SAFETRAN SYSTEMS CORPORATION

DES.: PEA	DATE: 02/25/08	JOB NO.: PICA10146A	
CKD.: RLC	ISSUE DATE: N/A	EST. NO.:	
DRN.: PEA	PLAN NO.: N/A	SHEET N/A OF N/A	
P TIME: 14:34	P DATE: 19-MAR-2008	CAD ID.: 03600C02	

$FILENAME
$DATE

$WATERMARK

NO.	DATE	BY	DESCRIPTION	APP. BY
1				
2				
3				
4				
5				

REVISIONS

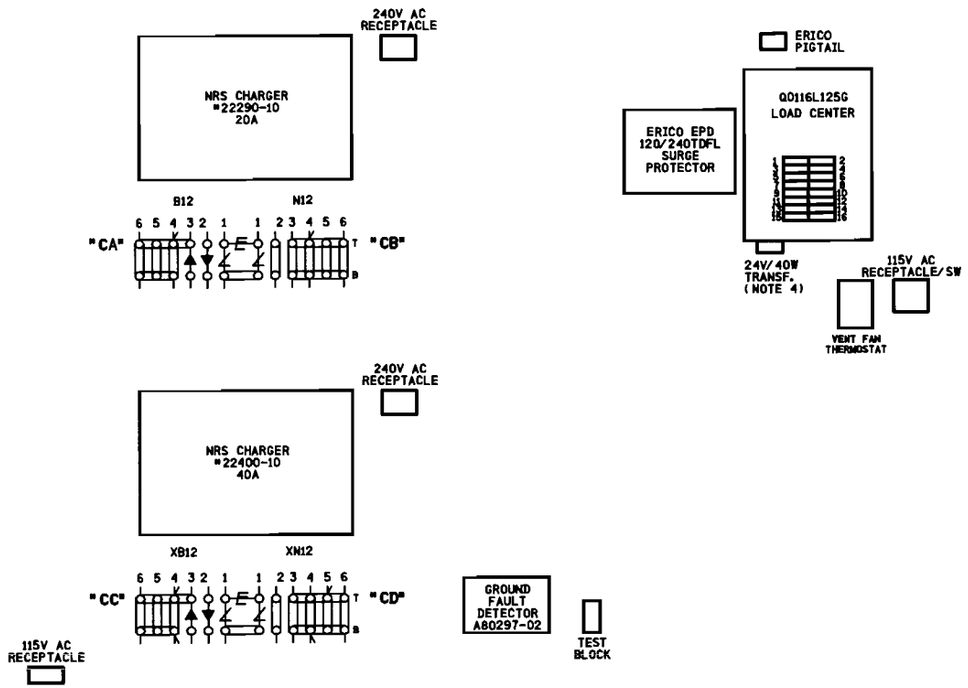

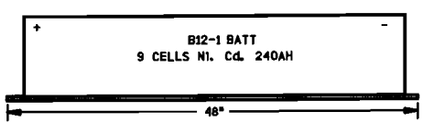

NOTES:

1) # DENOTES EQUALIZER TYPE:(SAFETRAN #022700-1X)
2) DENOTES LIGHTNING ARRESTER TYPE:(SAFETRAN #022585-1X)
3) SURGE PROTECTION SHOULD BE BONDED TO BUNGALOW.
4) 24V-40W TRANSFORMER (CN STOCK #02-45-367)

SIDE "C"

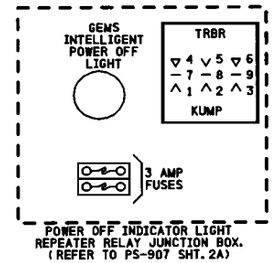

SIDE "D"
ABOVE ENTRY DOOR

$FILENAME
$DATE

PROPOSED
DES. No. _____
RED-IN YELLOW-OUT
AS INSTALLED
DATE _____
BY _____

6' X 6' BUNGALOW

PROPOSED D	M	Y	REVISIONS	D	C	COMPLETED D	M	Y	C

DIVISION MIDWEST
SUB. ST. LOUIS
SD. 1021 C
MP. 36.00 TO 37.60

SIGNALS AND COMMUNICATIONS EDMONTON, ALBERTA | DES. PEA
25 FEBRUARY 2008 | CH. RLC

BUNGALOW LAYOUT
SIDE "C" & OVER DOOR SIDE "D"
MAIN STREET
MARISSA, IL

M 03600C03

SAFETRAN SYSTEM CORP.
LOUISVILLE DIVISION, LOUISVILLE, KY

SAFETRAN SYSTEMS CORPORATION

DES.: PEA	DATE: 02/25/08	JOB NO.: P1CA0146A	
CKD.: RLC	ISSUE DATE: N/A	EST. NO.:	
DRN.: PEA	PLAN NO.: N/A	SHEET N/A OF N/A	
P TIME: 14:34	P DATE: 19-MAR-2008	CAD ID.: 03600C03	

$WATERMARK

NO.	DATE	BY	REVISIONS DESCRIPTION	APP. BY
1				
2				
3				
4				
5				

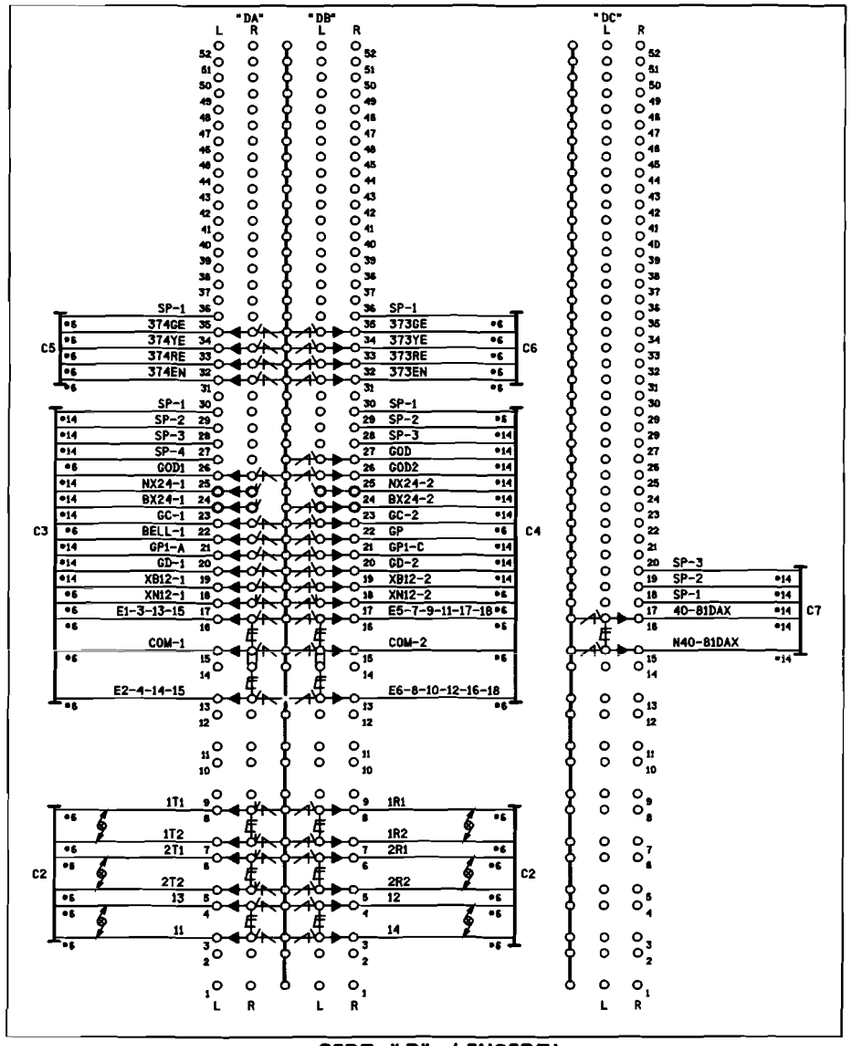

SIDE "D" (INSIDE)

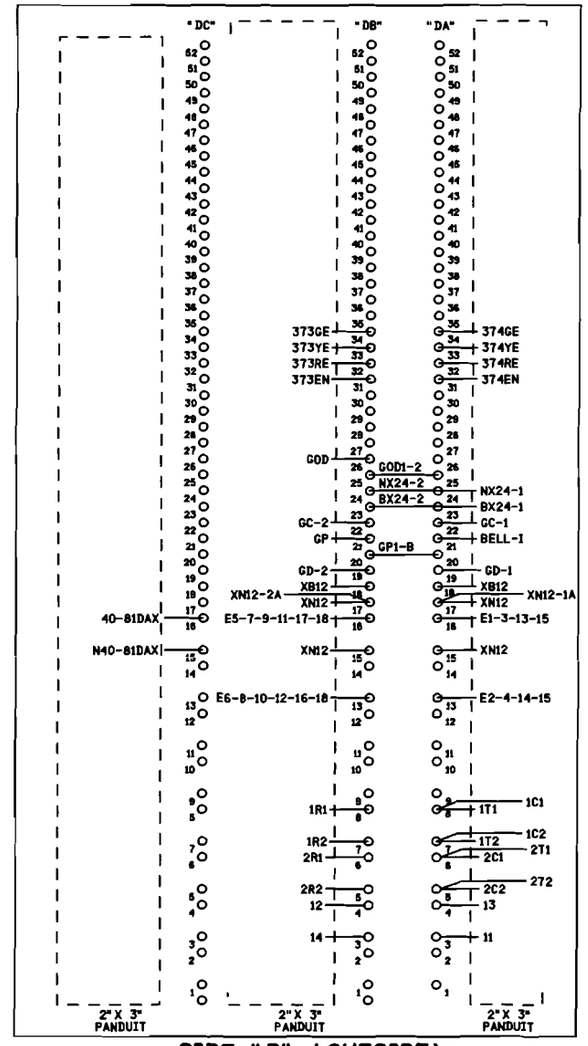

SIDE "D" (OUTSIDE)

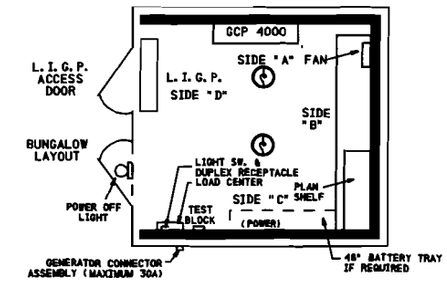

ROOF MOUNTED AC/HEATING UNIT

CABLE CONSIST:

C1-3C#6 TECK 9D U/G TO MAIN SERVICE
C2-(6)-2SC#6 TW. TO TRACK
C3-16C (7#6, 9#14) TO GATE (SIG.#1)
C4-16C (7#6, 9#14) TO GATE (SIG.#2)
C5-5C#6 TO SIGNAL G374
C6-5C#6 TO SIGNAL G373
C7-5C#14 TO SIGNAL M.P. 37.81

NOTES:

1) DENOTES LIGHTNING ARRESTER TYPE: (SAFETRAN #022585-1X)
2) DENOTES EQUALIZER TYPE: (SAFETRAN #022700-1X)
3) DENOTES TWISTED PAIR.
4) ENSURE DOUBLE NUTTING OF ALL TERMINALS.

PROPOSED
DES. No. _____
RED-IN YELLOW-OUT
AS INSTALLED
DATE _____
BY _____

6' X 6' BUNGALOW

PROPOSED D	M	Y	REVISIONS	D	C	COMPLETED D	M	Y	C

DIVISION MIDWEST
SUB. ST. LOUIS
SD. 1021 C
MP. 36.00 TO 37.60

SIGNALS AND COMMUNICATIONS
EDMONTON, ALBERTA
25 FEBRUARY 2008

DES. PEA
CH. RLC

BUNGALOW LAYOUT SIDE "D"
LOW IMPEDANCE GROUND PLANE
MAIN STREET
MARISSA, IL

M 03600C04

SAFETRAN SYSTEM CORP.
LOUISVILLE DIVISION, LOUISVILLE, KY

SAFETRAN SYSTEMS CORPORATION		
DES.: PEA	DATE: 02/25/08	JOB NO.: PIC410146A
CKD.: RLC	ISSUE DATE: N/A	EST. NO.:
DRN.: PEA	PLAN NO. N/A	SHEET N/A OF N/A
P TIME: 14:34	P DATE: 19-MAR-2008	CAD ID.: 03600C04

$FILENAME
$DATE

$WATERMARK

NO.	DATE	BY	REVISIONS DESCRIPTION	APP. BY
1				
2				
3				
4				
5				

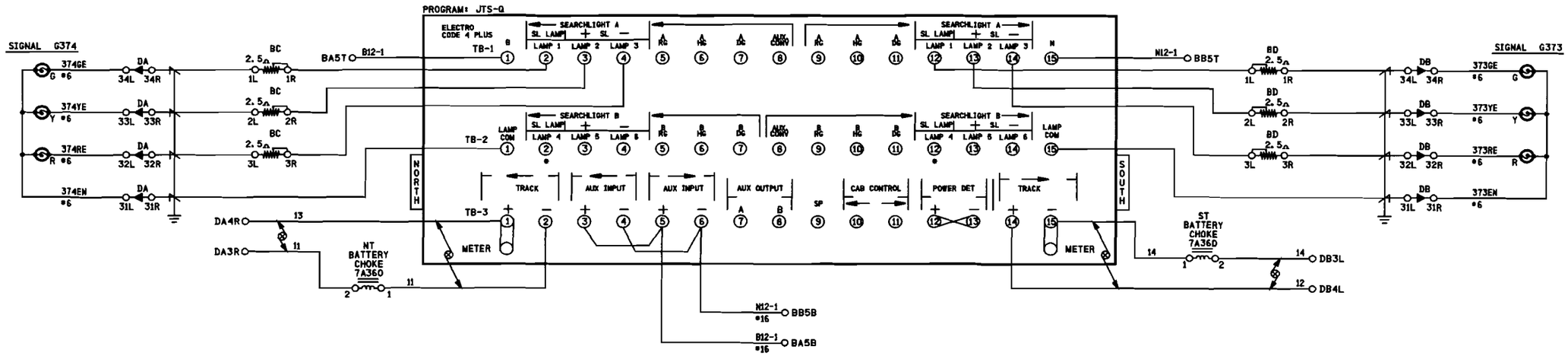

NOTE: TO SET IN FIELD.

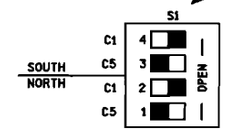

CODE 5 SELECT SWITCHES (215 MODULES)

■ = DEPRESSED

NOTES:

1) ALL WIRING #10 AWG UNLESS OTHERWISE NOTED. WIRE SIZES SHOWN ARE MINIMUM GAUGE.

2) ⚡ DENOTES TWISTED PAIR.

PROPOSED
DES. No. _____
RED-IN YELLOW-OUT
AS INSTALLED
DATE _____
BY _____

6' X 6' BUNGALOW

PROPOSED D	M	Y	REVISIONS	D	C	COMPLETED D	M	Y	C

DIVISION MIDWEST
SUB. ST. LOUIS
SD. 1021 C
MP. 36.00 TO 37.60

SIGNALS AND COMMUNICATIONS EDMONTON, ALBERTA — DES. PEA
25 FEBRUARY 2008 — CH. RLC

ELECTRO CODE 4 PLUS

MAIN STREET
MARISSA, IL

M 03600C05

SAFETRAN SYSTEM CORP.
LOUISVILLE DIVISION, LOUISVILLE, KY

SAFETRAN SYSTEMS CORPORATION

DES.: PEA	DATE: 02/25/08	JOB NO.: PICA10146A	
CKD.: RLC	ISSUE DATE: N/A	EST. NO.:	
DRN.: PEA	PLAN NO. N/A	SHEET N/A OF N/A	
P TIME: 14:35	P DATE: 19-MAR-2008	CAD ID.: 03600C05	

$FILENAME
$DATE

$WATERMARK

NO.	DATE	BY	DESCRIPTION	APP. BY
1				
2				
3				
4				
5				

REVISIONS

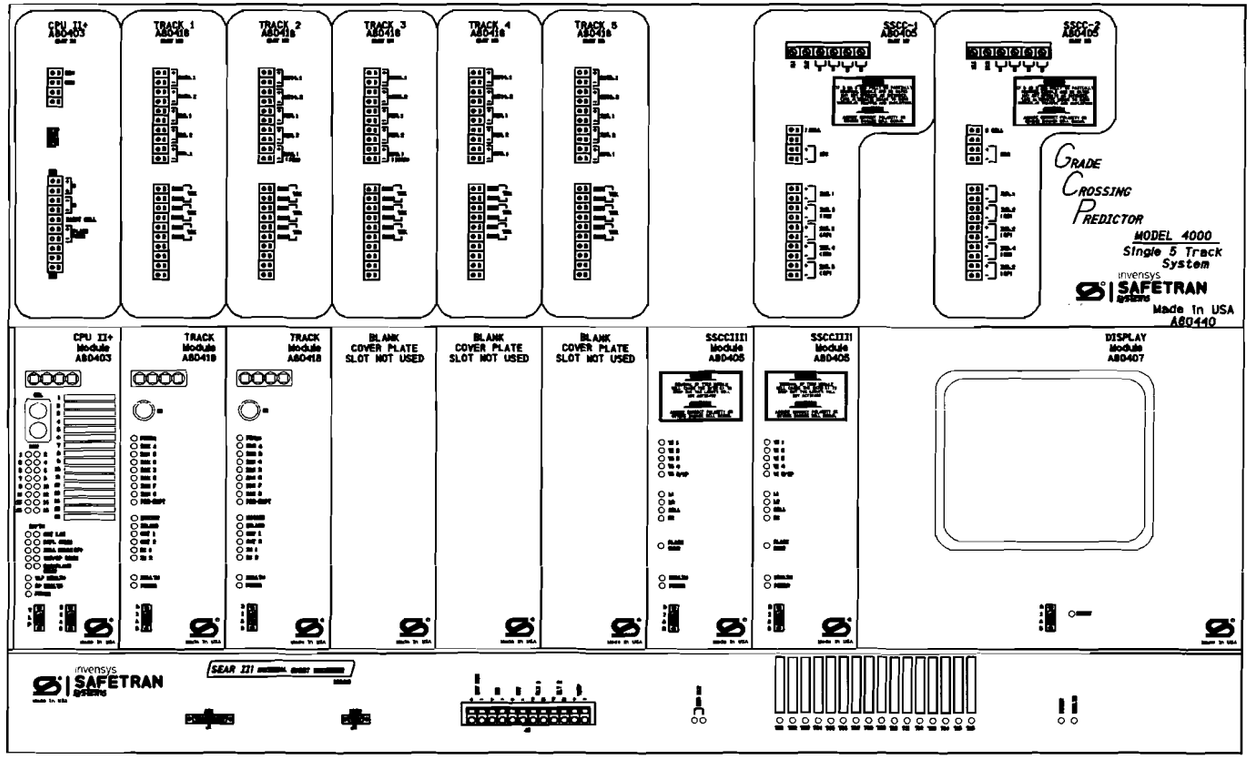

NOTE:

1) DISABLE THE DISPLAY HEATER BY REMOVING JUMPER J-22 (LOCATED AT THE EDGE OF THE DISPLAY MODULE CARD THAT PLUGS INTO THE CHASSIS).

ATTENTION!

ENSURE THE DISPLAY MODULE HEATER IS DISABLED. LEAVING THE DISPLAY HEATER ENABLE WILL REDUCE THE AMOUNT OF BATTERY STANDBY TIME IN THE EVENT OF AN AC POWER FAILURE.

HEATER FUNCTION IS
JUMPER SELECTABLE ON
THE DISPLAY MODULE BOARD.
THREE OPTIONS ARE AVAILABLE.
NORMAL LCD HTR (DEFAULT)
HI CURRENT
NO JUMPER (HEATER DISABLED)

PROPOSED
DES. No. _____
RED-IN YELLOW-OUT
AS INSTALLED
DATE _____
BY _____

6' X 6' BUNGALOW

PROPOSED D	M	Y	REVISIONS	D	C	COMPLETED D	M	Y	C

DIVISION MIDWEST
SUB. ST. LOUIS
SO. 1021 C
MP. 36.00 TO 37.60
CN

SIGNALS AND COMMUNICATIONS EDMONTON, ALBERTA | DES. PEA
25 FEBRUARY 2008 | CH. RLC

GCP 4000
5 TRK CHASSIS & MODULE LAYOUT
MAIN STREET
MARISSA, IL

03600C06

SAFETRAN SYSTEM CORP.
LOUISVILLE DIVISION, LOUISVILLE, KY

SAFETRAN SYSTEMS CORPORATION

DES.: PEA	DATE: 02/25/08	JOB NO.: PICA10146A	
CKD.: RLC	ISSUE DATE: N/A	EST. NO.:	
DRN.: PEA	PLAN NO.: N/A	SHEET N/A OF N/A	
P TIME: 14:35	P DATE: 19-MAR-2008	CAD ID.: 03600C06	

$FILENAME
$DATE

$WATERMARK

NO.	DATE	BY	DESCRIPTION	APP. BY
1				
2				
3				
4				
5				

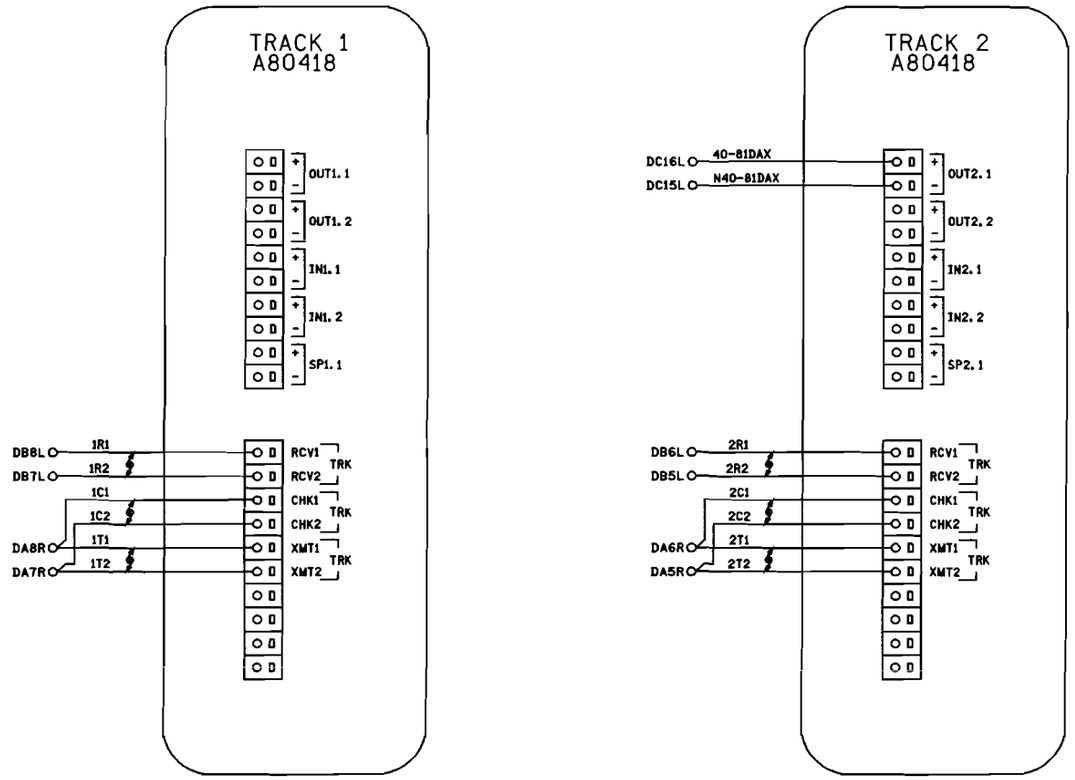

NOTES:

1) ALL WIRING #16 AWG UNLESS OTHERWISE NOTED.

2) DENOTES TWISTED PAIR.

PROPOSED
DES. No. _____
RED-IN YELLOW-OUT

AS INSTALLED
DATE _____
BY _____

6' X 6' BUNGALOW

PROPOSED D	M	Y	REVISIONS	D	C	COMPLETED D	M	Y	C

DIVISION MIDWEST
SUB. ST. LOUIS
SO. 1021 C
MP. 36.00 TO 37.60

SIGNALS AND COMMUNICATIONS
EDMONTON, ALBERTA
25 FEBRUARY 2008

DES. PEA
CH. RLC

GCP 4000
TRACKS 1 & 2 CONNECTIONS
MAIN STREET
MARISSA, IL

M 03600C07

SAFETRAN SYSTEM CORP.
LOUISVILLE DIVISION, LOUISVILLE, KY

$FILENAME
$DATE

SAFETRAN SYSTEMS CORPORATION			
DES.: PEA	DATE: 02/25/08	JOB NO.: PICA10146A	
CKD.: RLC	ISSUE DATE: N/A	EST. NO.:	
DRN.: PEA	PLAN NO.: N/A	SHEET N/A OF N/A	
P TIME: 14:35	P DATE: 19-MAR-2008	CAD ID.: 03600C07	

$WATERMARK

NO.	DATE	BY	REVISIONS DESCRIPTION	APP. BY
1				
2				
3				
4				
5				

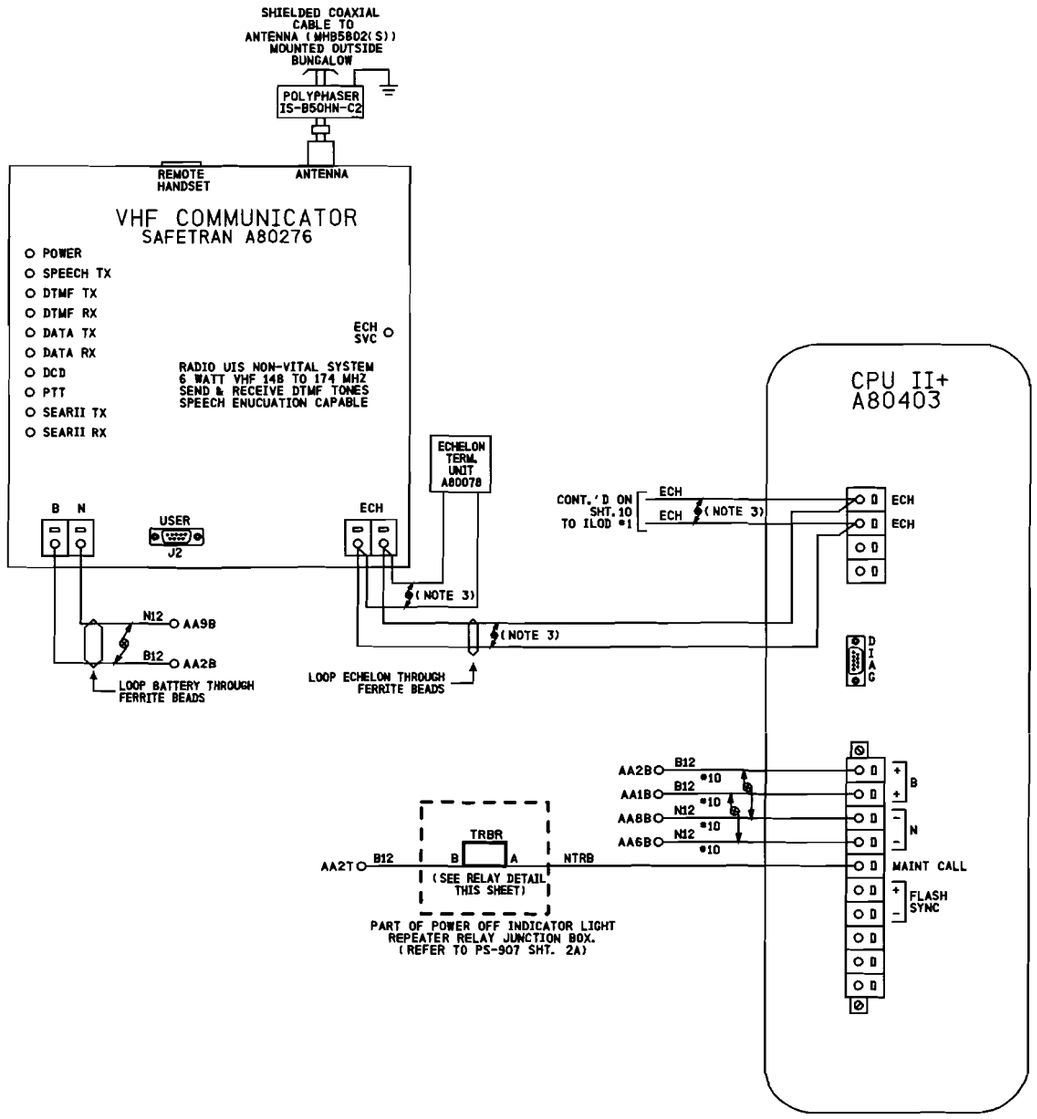

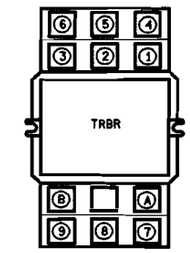

RELAY DETAIL

RELAY - POTTER & BRUMFIELD
MODEL KUMP-14D18-12 SOCKET MOUNTABLE
12 VDC W/ 3 FORM C CONTACTS.

SOCKET - SCREW TERMINAL
MODEL 27E121.

RELAY WIRING DIAGRAM (REAR VIEW)

NOTE:
SOCKET NUMBERING CORRESPONDS DIRECTLY WITH RELAY NUMBERING.
(COIL SHOWN ENERGIZED)

NOTES:
1) ALL WIRING #16 AWG UNLESS OTHERWISE NOTED.
2) DENOTES TWISTED PAIR.
3) USE BELDEN CABLE, PART #8461-U500-60 FOR ALL ECHELON AND LAN WIRING.

PROPOSED
DES. No. _____
RED-IN YELLOW-OUT
AS INSTALLED
DATE _____
BY _____

6' X 6' BUNGALOW

PROPOSED D	M	Y	REVISIONS	D	C	COMPLETED D	M	Y	C

DIVISION MIDWEST
SUB. ST. LOUIS
SD. 1021 C
MP. 36.00 TO 37.60

SIGNALS AND COMMUNICATIONS
EDMONTON, ALBERTA
25 FEBRUARY 2008

DES. PEA
CH. RLC

GCP 4000
CPUII+ & VHF COMMUNICATOR
MAIN STREET
MARISSA, IL

M 03600C08

SAFETRAN SYSTEM CORP.
LOUISVILLE DIVISION, LOUISVILLE, KY

SAFETRAN SYSTEMS CORPORATION

DES. : PEA	DATE: 02/25/08	JOB NO. : PICA10146A	
CKD. : RLC	ISSUE DATE: N/A	EST. NO. :	
DRN. : PEA	PLAN NO. :N/A	SHEET N/A OF N/A	
P TIME:14:35	P DATE: 19-MAR-2008	CAD ID. : 03600C08	

$FILENAME
$DATE

$WATERMARK

REVISIONS				
NO.	DATE	BY	DESCRIPTION	APP. BY
1				
2				
3				
4				
5				

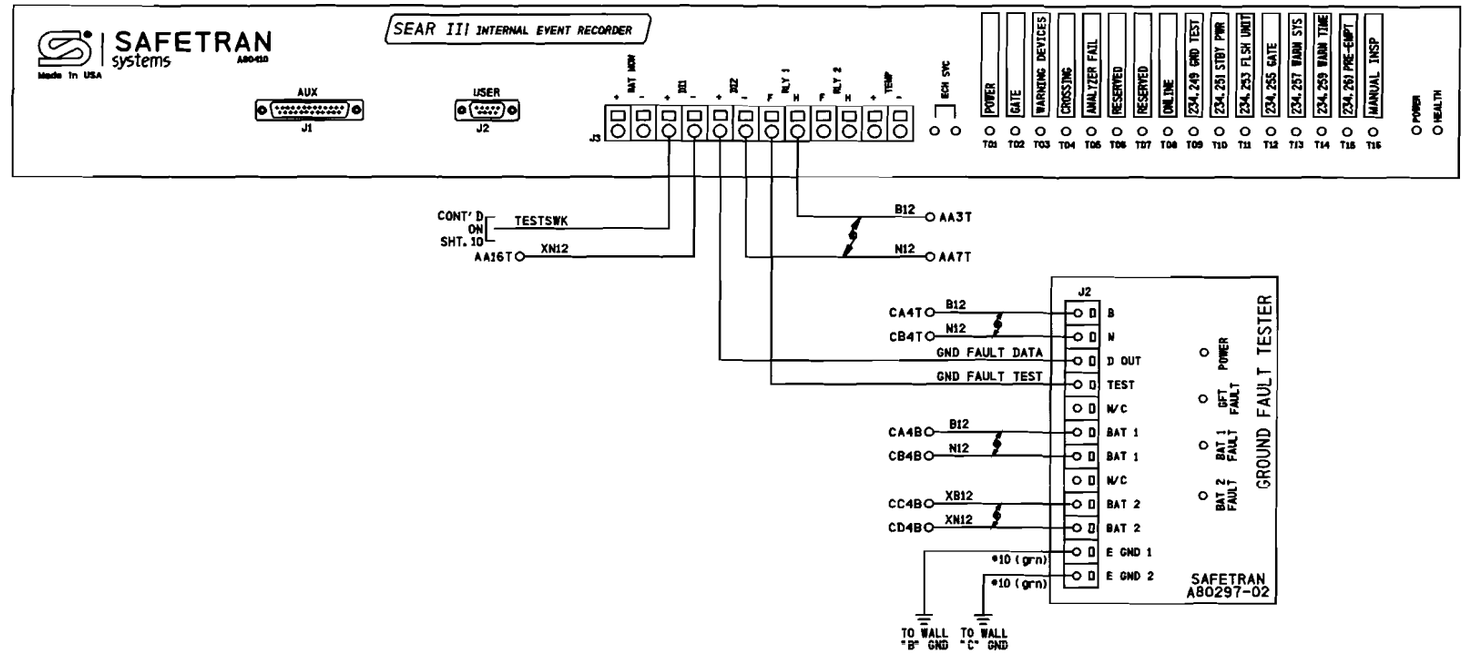

NOTES:
1) ALL WIRING #16 AWG UNLESS OTHERWISE NOTED.
2) DENOTES TWISTED PAIR.

PROPOSED
DES. No.
RED-IN YELLOW-OUT
AS INSTALLED
DATE
BY

6' X 6' BUNGALOW

PROPOSED D	M	Y	REVISIONS	D	C	COMPLETED D	M	Y	C

DIVISION MIDWEST
SUB. ST. LOUIS
SD. 1021 C
MP. 36.00 TO 37.60

SIGNALS AND COMMUNICATIONS EDMONTON, ALBERTA
25 FEBRUARY 2008
DES. PEA
CH. RLC

GCP 4000/SEAR III
INTERNAL EVENT ANALYZER WITH GFT
MAIN STREET
MARISSA, IL

M 03600C09

SAFETRAN SYSTEM CORP.
LOUISVILLE DIVISION, LOUISVILLE, KY

SAFETRAN SYSTEMS CORPORATION

DES.: PEA	DATE: 02/25/08	JOB NO.: PTCA10146A	
CKD.: RLC	ISSUE DATE: N/A	EST. NO.:	
DRN.: PEA	PLAN NO. IN/A	SHEET N/A OF N/A	
P TIME: 14:35	P DATE: 19-MAR-2008	CAD ID.: 03600C09	

$FILENAME
$DATE

$WATERMARK

NO.	DATE	BY	DESCRIPTION	APP. BY
1				
2				
3				
4				
5				

REVISIONS

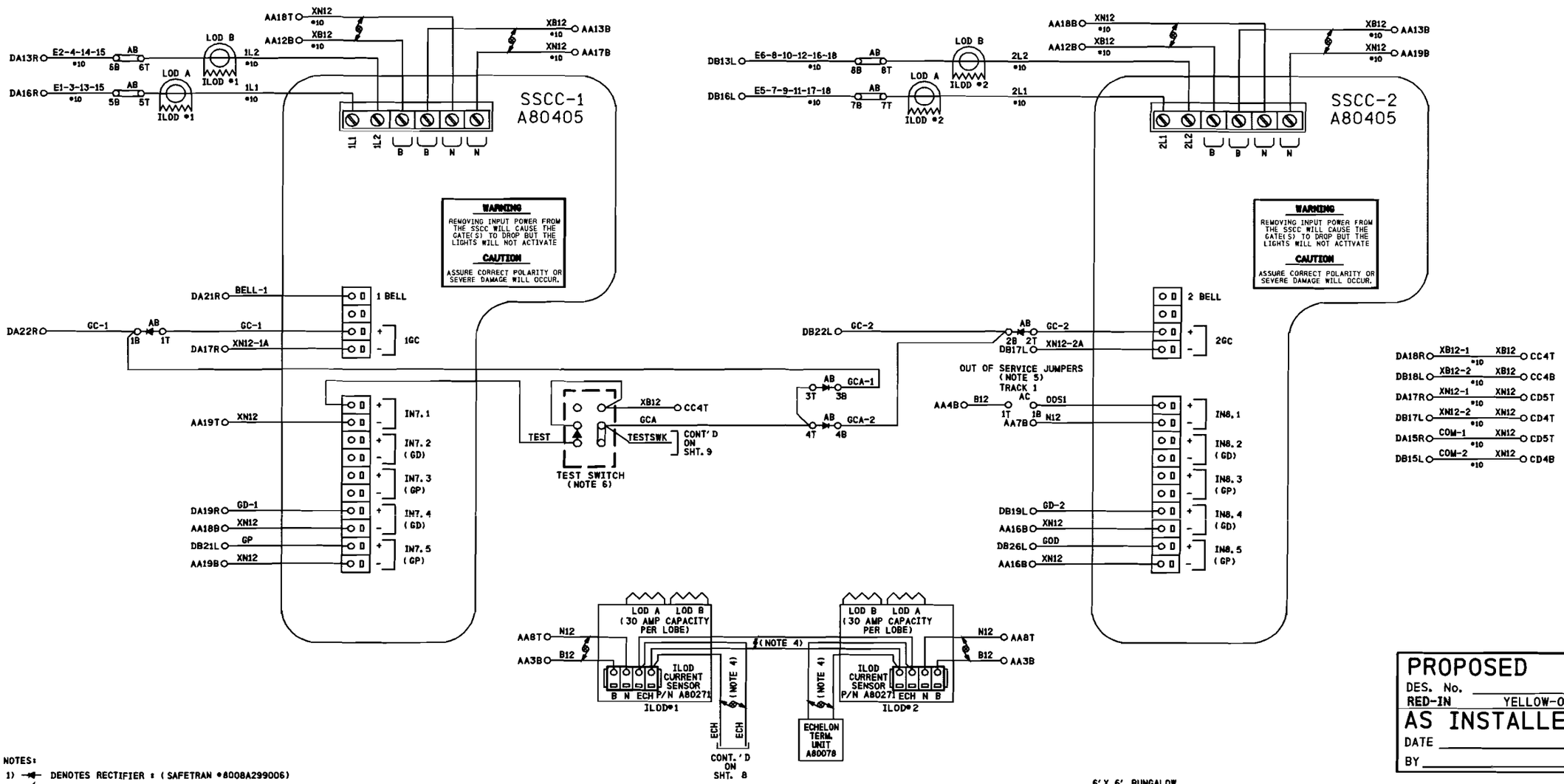

NOTES:

1) DENOTES RECTIFIER : (SAFETRAN #8008A299006)

2) DENOTES TWISTED PAIR.

3) ALL WIRING TO BE #16 AWG MINIMUM UNLESS OTHERWISE NOTED.

4) USE BELDEN CABLE, PART #8461-u500-60 FOR ALL ECHELON AND LAN WIRING.

5) TO TAKE TRACK 1 (T1) OUT OF SERVICE, JUMPER AC1T TO AC1B

6) IF LINK IS CONNECTED BETWEEN XB12 AND TESTSWK TERMINAL GATES WILL REMAIN IN UP POSTION.

PROPOSED
DES. No. _____
RED-IN YELLOW-OUT
AS INSTALLED
DATE _____
BY _____

6' X 6' BUNGALOW

PROPOSED D	M	Y	REVISIONS	D	C	COMPLETED D	M	Y	C

DIVISION MIDWEST
SUB. ST. LOUIS
SD. 1021 C
MP. 36.00 TO 37.60

SIGNALS AND COMMUNICATIONS EDMONTON, ALBERTA — DES. PEA
25 FEBRUARY 2008 — CH. RLC

GCP 4000/SSCCIIII
2-20 AMP CONTROLLERS W/ 2 ILODS
MAIN STREET
MARISSA, IL

M 03600C10

SAFETRAN SYSTEM CORP.
LOUISVILLE DIVISION, LOUISVILLE, KY

SAFETRAN SYSTEMS CORPORATION

DES.: PEA	DATE: 02/25/08	JOB NO.: PICA10146A	
CKD.: RLC	ISSUE DATE: N/A	EST. NO.:	
DRN.: PEA	PLAN NO.: N/A	SHEET N/A OF N/A	
P TIME: 14:35	P DATE: 19-MAR-2008	CAD ID.: 03600C10	

$FILENAME
$DATE

$WATERMARK

NO.	DATE	BY	REVISIONS DESCRIPTION	APP. BY
1				
2				
3				
4				
5				

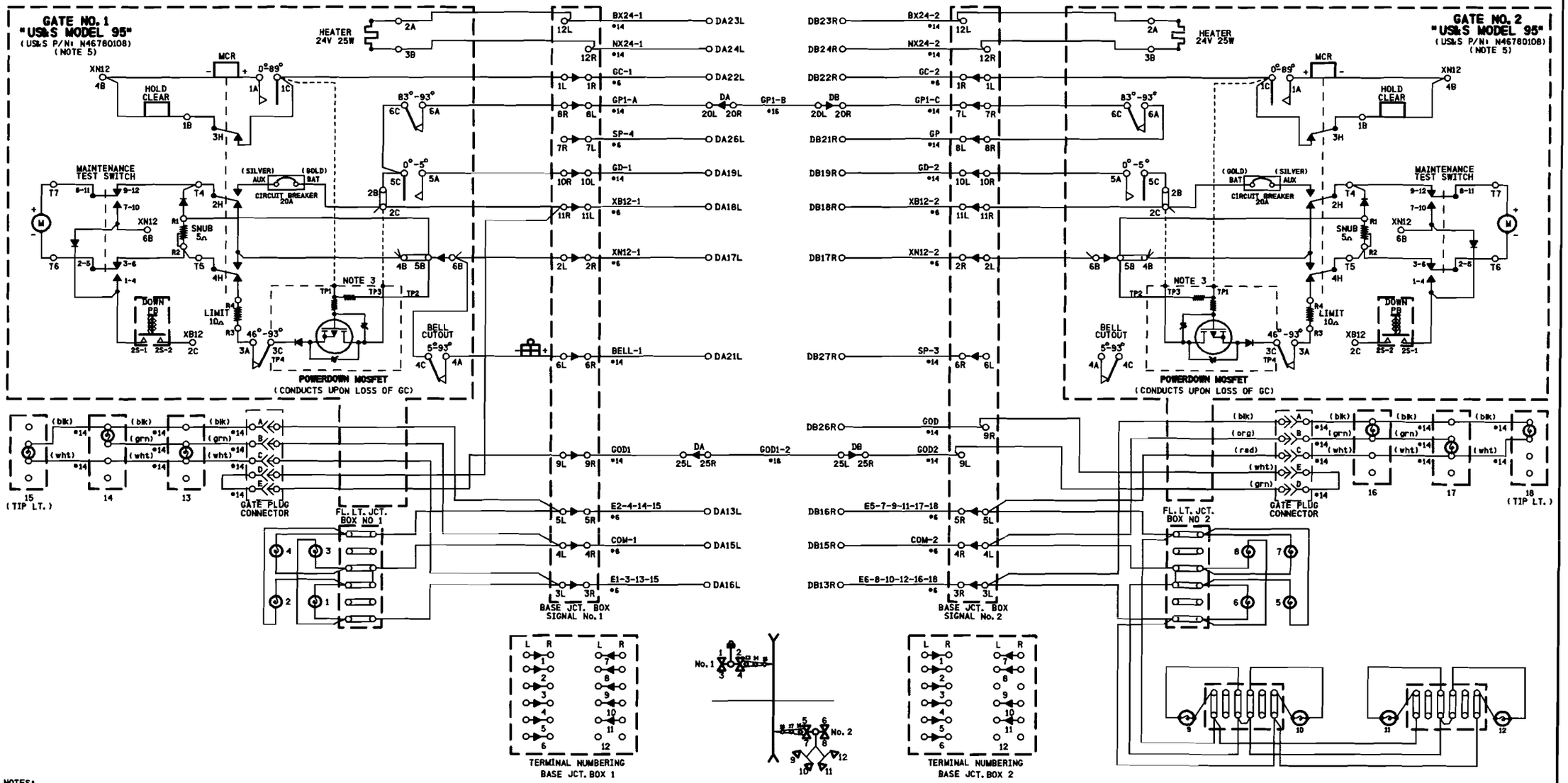

NOTES:

1) ON GATE No. 1 ADD STRAP BETWEEN TERMINAL 2B & 2C, ADD JUMPER BETWEEN TERMINAL 2B & 5C, BETWEEN TERMINAL 5C & 6C

2) ON GATE No. 2 ADD STRAP BETWEEN TERMINAL 2B & 2C ADD JUMPER BETWEEN TERMINAL 2B & 5C AND CONNECT GP AS SHOWN

3) POWERDOWN PCB TERMINALS TP1, TP3 & TP4 FIT OVER TERMINALS 1C, 2C & 3C RESPECTIVELY

4) ALL WIRING #10 AWG MINIMUM UNLESS OTHERWISE NOTED. WIRE SIZES SHOWN ARE MINIMUM GAUGE.

5) GATE DESCENT TIME (RELEASE FROM VERTICAL TO FULLY HORIZONTAL) TO BE WITHIN 11 SECONDS.

6) ENSURE ALL TERMINALS HAVE TWO SHOULDER NUTS.

PROPOSED
DES. No. _____
RED-IN YELLOW-OUT
AS INSTALLED
DATE _____
BY _____

6' X 6' BUNGALOW

PROPOSED D	M	Y	REVISIONS	D	C	COMPLETED D	M	Y	C

DIVISION MIDWEST
SUB. ST. LOUIS
SD. 1021 C
MP. 36.00 TO 37.60

SIGNALS AND COMMUNICATIONS EDMONTON, ALBERTA — DES. PEA
25 FEBRUARY 2008 — CH. RLC

GATE MECHANISM CONTROL CIRCUITS
US&S MODEL 95
MAIN STREET
MARISSA, IL

M 03600C11

SAFETRAN SYSTEM CORP.
LOUISVILLE DIVISION, LOUISVILLE, KY

SAFETRAN SYSTEMS CORPORATION

DES.: PEA	DATE: 02/25/08	JOB NO.: PICAI0146A	
CKD.: RLC	ISSUE DATE: N/A	EST. NO.:	
DRN.: PEA	PLAN NO.: N/A	SHEET N/A OF N/A	
P TIME: 14:35	P DATE: 19-MAR-2008	CAD ID.: 03600C11	

FILENAME
DATE

WATERMARK

NO.	DATE	BY	REVISIONS DESCRIPTION	APP. BY
1				
2				
3				
4				
5				

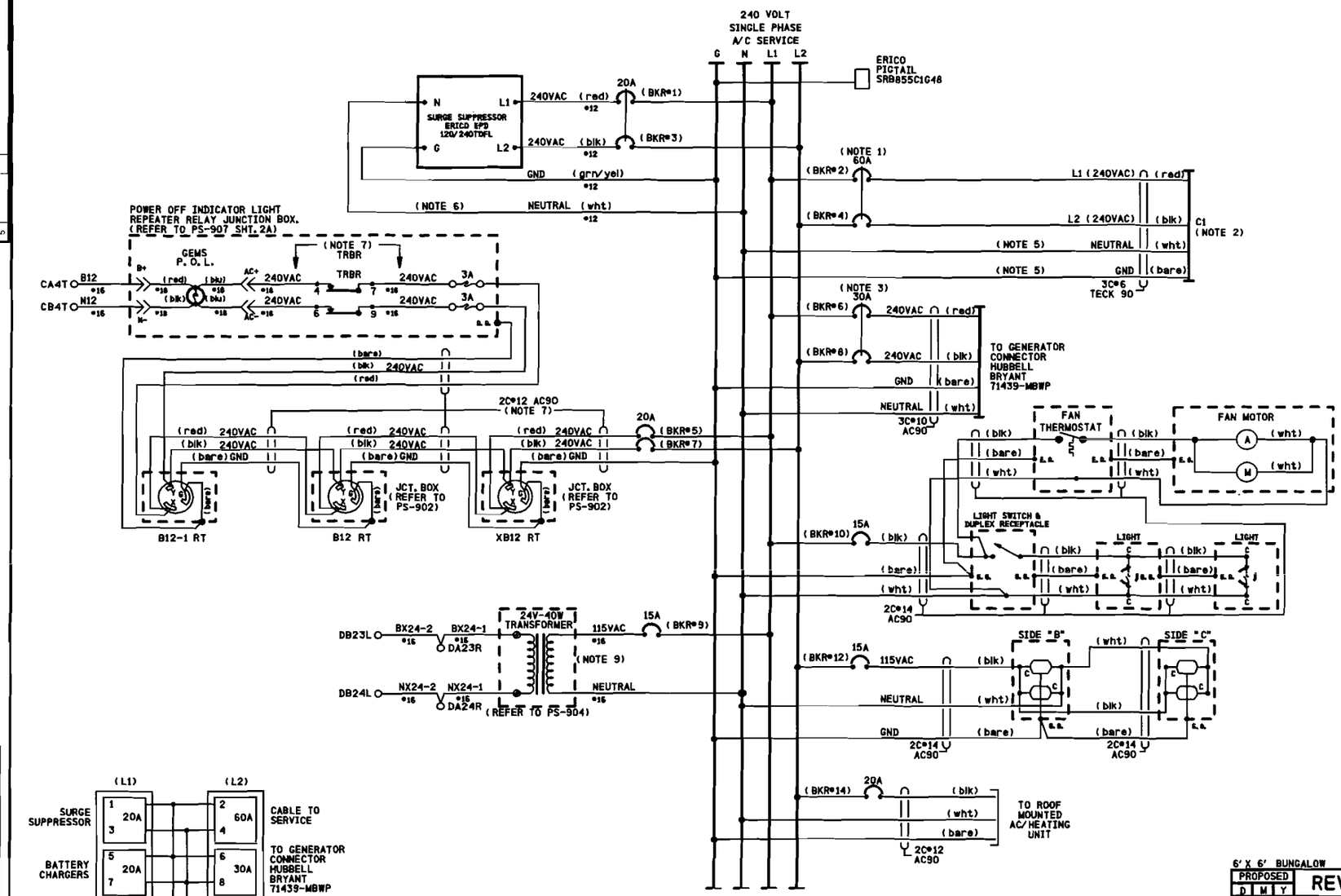

NOTES:

1) CIRCUIT BREAKER NOT TO EXCEED 60 AMPERES. RETAINING KIT PK4MB2LA MUST BE USED WITH 60A BREAKER.
2) FEEDER CIRCUIT BREAKER, AT STUB POLE SERVICE PANEL, NOT TO EXCEED 60 AMPERES.
3) A SWITCH TRANSFER KIT MUST BE INSTALLED BETWEEN THE SERVICE DISCONNECT BREAKER AND THE GENERATOR HOOK UP.
4) WHERE SEPARATE GROUND WIRE EXISTS BETWEEN THE SERVICE AND THE LOAD CENTER, REMOVE THE BRASS COLORED BONDING SCREW. (REFER TO SCHEMATIC ON BOX COVER FOR EXACT LOCATION)
5) S.C.#6 STRANDED, CSA TYPE R9D (X-LINK)
6) KEEP LEADS AS SHORT AS POSSIBLE
7) THE WHITE CONDUCTOR MUST BE MADE PERMANENTLY UNIDENTIFIABLE BY TAPING THIS CONDUCTOR RED. TAPING MUST BE CONTINUOUS WHERE THE SEPARATE CONDUCTORS HAVE BEEN MADE ACCESSIBLE AND VISIBLE.
8) « DENOTES WAGO TERMINAL
9) 24 VOLT - 40 WATT TRANSFORMER (CN STOCK #02-45-367)

FILENAME
DATE

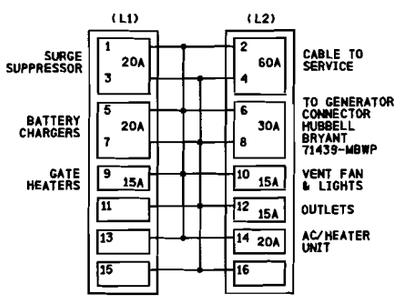

PROPOSED
DES. No.
RED-IN YELLOW-OUT
AS INSTALLED
DATE
BY

6' X 6' BUNGALOW

PROPOSED D	M	Y	REVISIONS	D	C	COMPLETED D	M	Y	C

DIVISION MIDWEST
SUB. ST. LOUIS
SD. 1021 C
MP. 35.00 TO 37.60
CN
SIGNALS AND COMMUNICATIONS
EDMONTON, ALBERTA
DES. PEA
25 FEBRUARY 2008
CH. RLC
POWER DISTRIBUTION
AC AND DC
MAIN STREET
MARISSA, IL
M 03600C12

SAFETRAN SYSTEM CORP.
LOUISVILLE DIVISION, LOUISVILLE, KY

SAFETRAN SYSTEMS CORPORATION

DES.: PEA	DATE: 02/25/08	JOB NO.: PICA10146A	
CKD.: RLC	ISSUE DATE: N/A	EST. NO.:	
DRN.: PEA	PLAN NO.: N/A	SHEET N/A OF N/A	
P TIME: 14:35	P DATE: 19-MAR-2008	CAD ID.: 03600C12	

$WATERMARK

NO.	DATE	BY	REVISIONS DESCRIPTION	APP. BY
1				
2				
3				
4				
5				

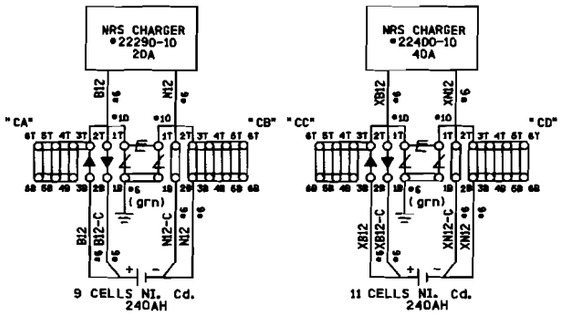

CA6T	B12 #10	AA1T	CC6T	XB12 #10	AA11T
CA6B	B12 #10	AA4T	CC6B	XB12 #10	AA14T
CB6T	N12 #10	AA6T	CD6T	XN12 #10	AA16T
CB6B	N12 #10	AA9T	CD6B	XN12 #10	AA19T

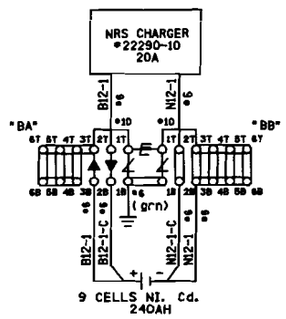

SAFETRAN SYSTEMS CORPORATION		
DES.: PEA	DATE: 02/25/08	JOB NO.: PICA10146A
CKD.: RLC	ISSUE DATE: N/A	EST. NO.:
DRW.: PEA	PLAN NO.: N/A	SHEET N/A OF N/A
P TIME: 14:35	P DATE: 19-MAR-2008	CAD ID.: 03600C13

PROPOSED
DES. No. _____
RED-IN YELLOW-OUT
AS INSTALLED
DATE _____
BY _____

6' X 6' BUNGALOW

PROPOSED D	M	Y	REVISIONS	D	C	COMPLETED D	M	Y	C

DIVISION MIDWEST
SUB. ST. LOUIS
SD. 1021 C
MP. 36.00 TO 37.60

SIGNALS AND COMMUNICATIONS
EDMONTON, ALBERTA
25 FEBRUARY 2008

DES. PEA
CH. RLC

POWER DISTRIBUTION
AC AND DC
MAIN STREET
MARISSA, IL

M 03600C13

SAFETRAN SYSTEM CORP.
LOUISVILLE DIVISION, LOUISVILLE, KY

$FILENAME
$DATE

WATERMARK

REVISIONS				
NO.	DATE	BY	DESCRIPTION	APP. BY
1				
2				
3				
4				
5				

Program Report

Location and SIN

DOT Number: 296124L
Milepost Number: 37.40
Site Name: MAIN STREET

SIN: 762010010016

MCF and Template Selection

MCF Name: GCP-T6X-01-2.mcf
MCF Revision: 012
MCFCRC: 0DFE7ADC

Template = 1D13 Uni psirs

Program

BASIC: module configuration
Track 1 Slot = Track
Track 2/RIO 1 Slot = Track
Track 3 Slot = Not Used
Track 4 Slot = Not Used
Track 5/RIO 2 Slot = Not Used
Track 6/RIO 3 Slot = Not Used
SSCC-1 Slot = SSCC31
SSCC-2 Slot = SSCC31
SEAR Used = Yes

BASIC: MS/GCP operation
Track 1 : MS/GCP Operation = Yes
Track 2 : MS/GCP Operation = Yes

BASIC: Island operation
Track 1 : Island Used = Internal
Track 2 : Island Used = No

BASIC: preemption
Preempt Logic = No

BASIC: radio Dax links
Radio DAX link A Used = No
Radio DAX link B Used = No

BASIC: Vital Comms links
Vital Comms link 1 Used = No
Vital Comms link 2 Used = No

PREDICTORS: track 1
Track 1 : Prime Used = Yes
Track 1 : Dax A Used = No
Track 1 : Dax B Used = No
Track 1 : Dax C Used = No
Track 1 : Dax D Used = No
Track 1 : Dax E Used = No
Track 1 : Dax F Used = No
Track 1 : Dax G Used = No

PREDICTORS: track 2
Track 2 : Prime Used = Yes
Track 2 : Dax A Used = Yes
Track 2 : Dax B Used = No
Track 2 : Dax C Used = No
Track 2 : Dax D Used = No
Track 2 : Dax E Used = No
Track 2 : Dax F Used = No
Track 2 : Dax G Used = No

GCP: track 1
Track 1 : GCP Freq Category = Standard
Track 1 : GCP Frequency = 156 Hz
Track 1 : Approach Distance = 3160 ft
Track 1 : Uni/Bi/Sim-Bidirni = Unidirni
Track 1 : GCP Transmit Level = High
Track 1 : Island Connection = Isl1
Track 1 : Island Distance = 140 ft
Track 1 : Computed Distance = 9999 ft
Track 1 : Linearization Steps = 100

GCP: track 1 prime
Track 1 : Prime Warning Time = 26 sec
Track 1 : Prime Offset Distance = 0 ft
Track 1 : Switch MS EZ Level = 10
Track 1 : Prime MS/GCP Mode = Pred
Track 1 : Prime Pickup Delay = 30 sec
Track 1 : Prime UAX = Not Used

GCP: track 1 low EZ detect
Track 1 : Low EZ Detection Used = No
Track 1 : Positive Start = Off
Track 1 : Enhanced Detectn Used = Yes
Track 1 : Station Stop Timer = 10 sec
Track 1 : False Activate Level = Normal
Track 1 : Poor Shunting Level = 2

GCP: track 1 MS Control
Track 1 : MS/GCP CtrlIP Used = No
Track 1 : MS Sensitivity Level = 0
Track 1 : Compensation Level = 1300
Track 1 : Low EX Adjustment = 39
Track 1 : Bidirn Dax Passthru = No

GCP: track 2
Track 2 : GCP Freq Category = Standard
Track 2 : GCP Frequency = 156 Hz
Track 2 : Approach Distance = 3180 ft
Track 2 : Uni/Bi/Sim-Bidirni = Unidirni
Track 2 : GCP Transmit Level = High
Track 2 : Island Connection = Isl1
Track 2 : Island Distance = 0 ft
Track 2 : Computed Distance = 9999 ft
Track 2 : Linearization Steps = 100

GCP: track 2 prime
Track 2 : Prime Warning Time = 26 sec
Track 2 : Prime Offset Distance = 0 ft
Track 2 : Switch MS EZ Level = 10
Track 2 : Prime MS/GCP Mode = Pred
Track 2 : Prime Pickup Delay = 30 sec
Track 2 : Prime UAX = Not Used

GCP: track 2 Dax A
Track 2 : Dax A Warning Time = 25 sec
Track 2 : Dax A Offset Distance = 2163 ft
Track 2 : Pickup Delay Mode = Auto
Track 2 : Dax A Pickup Delay = 30 sec
Track 2 : Dax A Enable = Not Used

GCP: track 2 low EZ detect
Track 2 : Low EZ Detection Used = No
Track 2 : Positive Start = Off
Track 2 : Enhanced Detectn Used = No
Track 2 : Trailing Switch Logic = Off

GCP: track 2 MS Control
Track 2 : MS/GCP CtrlIP Used = No
Track 2 : MS Sensitivity Level = 0
Track 2 : Compensation Level = 1300
Track 2 : Low EX Adjustment = 39
Track 2 : Bidirn Dax Passthru = No

ISLAND: track 1
Track 1 : IslFrequency = 6.3 kHz
Track 1 : Pickup Delay (2s +) = 0 sec

AND: track Anding
AND 1 XR Used = Yes
AND 2 Used = No
AND 3 Used = No
AND 4 Used = No
AND 5 Used = No
AND 6 Used = No
AND 7 Used = No
AND 8 Used = No

AND: AND 1 XR
AND 1 XR Track 1 = Prime
AND 1 XR Track 2 = Prime
AND 1 Enable Used = Yes
And 1 Enable Pickup = 2 sec
AND 1 Enable Drop = 0 sec
AND 1 Wrap Used = No

ADVANCED: MS restart
MS/GCP Restart Used = No

ADVANCED: out of service
OOS Control = OOS IPs

ADVANCED: out of service 2
T1 OOS Control = OOS Input 1
T2 OOS Control = OOS Input 1
T1 OOS Controls = GCP and Island
T2 OOS Controls = GCP Only

ADVANCED: track wrap circuits
Wrap LOS Timer = 5 sec
Track 1 Wrap Used = No
Track 2 Wrap Used = No

ADVANCED: trk 1 overrides
Track 1 : All Predictors Override Used = No

ADVANCED: trk 2 overrides
Track 2 : All Predictors Override Used = No
Track 2 : Dax A Override Used = No

ADVANCED: OR logic
OR 1 Used = No
OR 2 Used = No
OR 3 Used = No
OR 4 Used = No

ADVANCED: Internal I/O 1
Pass Thrus = No
Int. 1 Sets = Not Used
Int. 1 Set by = Not Used
Int. 2 Sets = Not Used
Int. 2 Set by = Not Used
Int. 3 Sets = Not Used
Int. 3 Set by = Not Used
Int. 4 Sets = Not Used
Int. 4 Set by = Not Used

ADVANCED: Internal I/O 2
Int. 5 Sets = Not Used
Int. 5 Set by = Not Used
Int. 6 Sets = Not Used
Int. 6 Set by = Not Used
Int. 7 Sets = Not Used
Int. 7 Set by = Not Used
Int. 8 Sets = Not Used
Int. 8 Set by = Not Used

ADVANCED: site options
Daylight Savings = On
Units = Standard
Ext Maint Call Input = No
Emergency Activate IP = No
EI/EX Logging = Change
EI/EX Point Change = 3

SSCC
Gates Used = Yes
SSCC1+2 GPs Coupled = Yes
Min Activation = 20 sec
Rmt Activation Cancel = 3 min
Bell On Gate Rising = No
Mute Bell On Gate Down = No
SSCCIV Controller Used = No

SSCC: 1
SSCC-1 Activation = AND 1 XR
SSCC-1 Gate Delay = 3 sec
SSCC-1 Number of GPs = 1
SSCC-1 Number of GDs = 1
SSCC 1 : Flash Rate = 60
SSCC 1 : Low Battery Detection = No
SSCC 1 : Flash Sync = master
SSCC 1 : Invert Gate Output = No
SSCC 1 : Lamp Neutral Test = Off
Aux-1 Xng CtrlUsed = No

SSCC: 2
SSCC-2 Activation = AND 1 XR
SSCC-2 Gate Delay = 3 sec
SSCC-2 Number of GPs = 0
SSCC-2 Number of GDs = 1
SSCC 2 : Flash Rate = 60
SSCC 2 : Low Battery Detection = No
SSCC 2 : Flash Sync = slave
SSCC 2 : Invert Gate Output = No
SSCC 2 : Lamp Neutral Test = Off
Aux-2 Xng CtrlUsed = No

OUTPUT: assignment page 1
OUT 1.1 = Not Used
OUT 1.2 = Not Used
OUT 2.1 = T2 Dax A
OUT 2.2 = Not Used

INPUT: assignment page 1
IN 1.1 = Not Used
IN 1.2 = Not Used
IN 2.1 = Not Used
IN 2.2 = Not Used

IO: assignment SSCC
OUT GC 1 = Gate Output 1
OUT GC 2 = Gate Output 2
IN 7.1 = AND 1 XR Enable
IN 7.2 = Not Used
IN 7.3 = Not Used
IN 7.4 = GD 1.1
IN 7.5 = GP 1.1
IN 8.1 = Out Of Service IP 1
IN 8.2 = Not Used
IN 8.3 = Not Used
IN 8.4 = GD 2.1
IN 8.5 = Not Used

SEAR
SEAR Subnode = 99
DI 1 = General1
DI 2 = Gnd Flt Tester 1
Rly 1 = Ground Fault Test
Rly 2 = Not Used

SEAR: inputs
SP 2.1 = Not Used
SP 3.1 = Not Used
SP 4.1 = Not Used
SP 5.1 = Not Used
SP 6.1 = Not Used

SEAR: slot 1-4 inputs
IN 1.1 = Not Used
IN 1.2 = Not Used
IN 2.1 = Not Used
IN 2.2 = Not Used
IN 3.1 = Not Used
IN 3.2 = Not Used
IN 4.1 = Not Used
IN 4.2 = Not Used

SEAR: inputs slot 5
IN 5.1 = Not Used
IN 5.2 = Not Used

SEAR: inputs slot 6
IN 6.1 = Not Used
IN 6.2 = Not Used

SEAR: slot 7-8 inputs
IN 7.2 = Not Used
IN 7.3 = Not Used
IN 8.2 = Not Used
IN 6.3 = Not Used
IN 8.5 = General2

SITE: programming
Radio Subnode = 1
Password Access = Off
Low Battery Enabled = Off

Configuration Package File

Filename: 296124L.pac

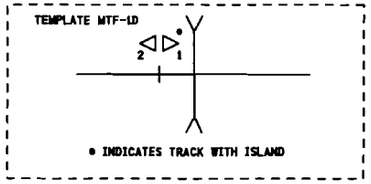

NOTES:

1) DISTANCE(S) TO BE VERIFIED AT INSTALLATION. INDICATE SELECTED PROGRAMMED VALUE IF DIFFERENT THAN SHOWN. REFER TO 4000 GCP INSTRUCTION/INSTALLATION MANUAL FOR PROGRAMMING PARAMETERS.

2) PROGRAM TEXT HIGHLITED IN RED INDICATES 4000 PROGRAM MODIFICATIONS TO DEFAULT PROGRAM VALUES.

3) EACH CONSTANT WARNING DEVICE SYSTEM TO BE PROGRAMMED TO CONVERT TO A MOTION SENSOR 300 FEET FROM EDGE OF ROAD TRAVELLED WAY.
SHUNT TRACK 300 FEET FROM EDGE OF ROAD TRAVELLED WAY AND NOTE "EZ" VALUE.
PROGRAM EACH SYSTEM WITH THE INDICATED "EZ" VALUE +2.

4) VERIFY SET TIMER VALUE TO MATCH ACTUAL TRAIN MOVEMENT WITHIN THE CROSSING APPROACH CIRCUITS.

RECEIVED
APR 11 2008
Illinois Commerce Commission
RAIL SAFETY SECTION

PROPOSED
DES. No. _____
RED-IN YELLOW-OUT
AS INSTALLED
DATE _____
BY _____

6' X 6' BUNGALOW

PROPOSED			REVISIONS	D	C	COMPLETED			C
D	M	Y				D	M	Y	

DIVISION MIDWEST
SUB. ST. LOUIS
SD. 1021 C
MP. 36.00 TO 37.60

SIGNALS AND COMMUNICATIONS
EDMONTON, ALBERTA
25 FEBRUARY 2008

DES. PEA
CH. RLC

GCP 4000
PROGRAM INFORMATION
MAIN STREET
MARISSA, IL

M 03600C14

SAFETRAN SYSTEM CORP.
LOUISVILLE DIVISION, LOUISVILLE, KY

SAFETRAN SYSTEMS CORPORATION

DES. : PEA	DATE: 03/25/08	JOB NO. : PICAG146A	
CKD. : RLC	ISSUE DATE: N/A	EST. NO. : N/A	
DRN. : PEA	PLAN NO. : N/A	SHEET N/A OF N/A	
P TIME: 12:43	P DATE: 10-APR-2008	CAD ID. : 03600C14	

©FILENAME
©DATE

$WATERMARK

NO.	DATE	BY	DESCRIPTION	APP. BY
1				
2				
3				
4				
5				

REVISIONS

TO CONFIGURE SEARII & SEARII! PRESS SITE SETUP KEY. USE ARROW KEYS TO MAKE SELECTION, PRESS ENTER AFTER SELECTION HAS BEEN MADE.

STAGE 1

PROGRAM MENU QUESTIONS	PROGRAM	OPTIONS/RANGE
DATE/TIME?	CURRENT DATE/TIME	CURRENT DATE/TIME
AUTOMATIC DST ADJUSTMENT?	YES	YES, NO
TIME ZONE?	EASTERN	EASTERN, CENTRAL, MOUNTAIN, PACIFIC, ALASKA, HAWAII, ATLANTIC, SASKATCHEWAN, NEW FOUNLAND
SITE NAME?	MAIN STREET	STREET NAME
MILE POST?	37.40	MILEAGE
DOT/CROSSING IS #?	296124L	DOT/CROSSING #
TESTER TYPE?	CROSSING	CROSSING, WAYSIDE
DATE FORMAT?	dd-mm-yyyy	mm-dd-yyyy, dd-mm-yyyy
TEMPERATURE FORMAT?	FAHRENHEIT	FAHRENHEIT, CELSIUS
SITE TYPE?	NO COM	NO COM, BULLHORN, DIALUP, NODE, COLLECTOR
SITE ATCS ADDRESS?	7.620.100.100.99.01	7.RRR.LLL.GGG.99.01
OFFICE ATCS ADDRESS?		2.RRR.NN.DDDD
(FOR NODE USE) PRIMARY HOP ADDR?		7.RRR.LLL.GGG.00.01
(FOR NODE USE) BACKUP HOP ADDR1?		7.RRR.LLL.GGG.00.01
(FOR NODE USE) BACKUP HOP ADDR2?		7.RRR.LLL.GGG.00.01
(FOR COLLECTOR USE) POLL ID?		1-99
(FOR COLLECTOR USE) MODE?		GEN/ATCS, GENISYS
(FOR COLLECTOR USE) WAMS/XID?		ENABLED, DISABLE
(FOR COLLECTOR USE) OFFICE COMM. DEVICE?		DIRECT (RS232) MCM (RS232) MCM (ECHELON) SREAD SPEC (ECHELON) DIAL MODEM (RS232) S200 RADIO (RS422)
(FOR COLLECTOR USE) OFFICE PHONE NUMBER?		PHONE NUMBER OF WAMS
(FOR COLLECTOR USE) INIT STRING?		OPTIONAL HAYES MODEM INITIALIZATION STRING
FIELD COMM. DEVICE?		VHF COMM. (ECHELON) VHF COMM. (RS232) SPREAD SPEC (ECHELON) SPREAD SPEC (RS232)
USER PORT?	57600, 8, N, 1, N	BAUD, DATA BITS, PARITY, STOP BITS, FLOW CONTROL
AUX PORT?	9600, 8, N, 1, N	BAUD, DATA BITS, PARITY, STOP BITS, FLOW CONTROL

YOU WILL NOW SEE A MESSAGE "PLEASE WAIT COMPILING STAGE 1"
CONTINUE TO NEXT PROGRAM MENU QUESTIONS.

STAGE 2

QUESTION	PROGRAM	SELECTION 1 (MINIMUM)	SELECTION 2 (MAXIMUM)	CONDITION FOR MENU DISPLAY
RESET NAMES / MODULES ?	NO	YES	NO	ALWAYS
RAILROAD NUMBER ?	360 (IC)	1	999	ALWAYS
CROSSING CONFIGURATION	NORMAL	NORMAL	SPLIT GATE (NOTE 1)	ALWAYS
ENTRANCE GATES ?	0 (NOTE 2)	0	8	ALWAYS
GATE POSTION FAIL TIME (SECONDS) ?	N/A	10	60	GATES > 0
BATTERY BANKS ?	2	1	3	ALWAYS
BATT MON USED ?	NO	NO	YES	ALWAYS
INTERNAL CROSSING CONTROLLERS ?	2	0	2	ALWAYS
EXTERNAL CROSSING CONTROLLERS ?	0	0	2	CROSSING CONTROLLER = YES
VHF COMMUNICATOR ?	YES	YES	NO	ALWAYS
DTMF ACTIVATION?	NO	NO	YES	RAILROAD = 360 (IC)
ACTIVATION CODE ?	N/A	1	999	VHF COMMUNICATOR = YES
ACTIVATION TIMEOUT ?	N/A	1	600	VHF COMMUNICATOR = YES
ILOD MODULES ?	2	0	4	ALWAYS
ANY LED BULBS USED ?	YES	NO	YES	ILOD MODULES > 0
AUTO INSPECTION ?	NO	YES	NO	ALWAYS
BELL SENSORS ?	0	0	8	ALWAYS
BELL SENSORS TSS1 ?	N/A	NO	YES	BELL SENSORS > 0
BELL SENSORS TSS2 ?	N/A	NO	YES	BELL SENSORS > 0
BELL SENSORS TSS3 ?	N/A	NO	YES	BELL SENSORS > 0
BELL SENSORS TSS4 ?	N/A	NO	YES	BELL SENSORS > 0
BELL SENSORS TSS5 ?	N/A	NO	YES	BELL SENSORS > 0
BELL SENSORS TSS6 ?	N/A	NO	YES	BELL SENSORS > 0
BELL SENSORS TSS7 ?	N/A	NO	YES	BELL SENSORS > 0
BELL SENSORS TSS8 ?	N/A	NO	YES	BELL SENSORS > 0
BELL ON ?	N/A	GATES LOWERING	GATES MOVING	BELL SENSORS > 0
GFT'S ?	YES	YES	NO	ALWAYS
BATTERIES ON GFT1 ?	2	1	2	GFT'S = YES
GATE TIP SENSORS ?	N/A	YES	NO	GATES > 0
RTU ?	NO	NO	YES	ALWAYS
VHF VOICE CHANNEL ?	1	1	8	VHF COMMUNICATOR = YES (VERIFY CHANNEL)
VHF DATA CHANNEL ?	1	1	8	VHF COMMUNICATOR = YES (VERIFY CHANNEL)
USE CELL MODEM NON-CRITICAL FEATURE ?	NO	NO	YES	ALWAYS
FULL APPROACH MOVE ALARMS ?	ACTIVATE	ACTIVATE	DO NOT ACTIVATE	ALWAYS

YOU WILL NOW SEE A MESSAGE "PLEASE WAIT COMPILING STAGE 2"
CONTINUE TO NEXT PROGRAM MENU QUESTIONS.

STAGE 3

PROGRAM MENU QUESTIONS	PROGRAM
EDIT DIGITAL INPUTS	NO
EDIT BATTERIES	NO
EDIT RELAYS	NO
EDIT TEST LEDS	NO
EDIT ILOD SENSORS	NO
EDIT VHF SETTINGS	NO
GCP4K ATCS SUBNODE?	16

SAVE CONFIGURATION

NOTES:

1) ADDITIONAL OPTIONS: DUAL CROSSING, EXTERNAL ENTRANCE GATE CONTROLLERS.
2) SELECT "0" IF NO GATE TIP AND BELL SENSORS ARE USED. THUS GATE AND BELL SENSOR RELATED STEPS WILL NOT BE AVAILABLE, OVERWISE ERRORS IN SEARS RECORDING WILL OCCUR.

PROPOSED
DES. No. _____
RED-IN YELLOW-OUT
AS INSTALLED
DATE _____
BY _____

SEARII EXECUTIVE 9V725 REV. A01U, SEARII APPLICATION 9V864 REV. A01J

PROPOSED D	PROPOSED M	PROPOSED Y	REVISIONS	D	C	COMPLETED D	COMPLETED M	COMPLETED Y	C

DIVISION MIDWEST
SUB. ST. LOUIS
SD. 1021 C
MP. 36.00 TO 37.60

SIGNALS AND COMMUNICATIONS EDMONTON, ALBERTA — DES. PEA
25 FEBRUARY 2008 — CH. RLC

GCP 4000/SEARII!
SETUP AND PROGRAM
MAIN STREET
MARISSA, IL

M 03600C15

SAFETRAN SYSTEM CORP.
LOUISVILLE DIVISION, LOUISVILLE, KY

SAFETRAN SYSTEMS CORPORATION

DES.: PEA	DATE: 02/25/08	JOB NO.: P1CA1D146A	
CKD.: RLC	ISSUE DATE: N/A	EST. NO.: N/A	
DRN.: PEA	PLAN NO.: N/A	SHEET: N/A OF N/A	
P TIME: 14:35	P DATE: 19-MAR-2008	CAD ID.: 03600C15	

$FILENAME
$DATE

$WATERMARK

NO.	DATE	BY	REVISIONS DESCRIPTION	APP. BY
1				
2				
3				
4				
5				

CALIBRATION HISTORY

INITIAL SET UP BY: _____ DATE: _____

DC VOLTAGE READINGS AFTER CALIBRATION				CALIBRATION HISTORY										LINEARIZATION HISTORY (NOTE 1)							
				EZ/EX VALUES (TRACK UNOCCUPIED)				HARD WIRE SHUNT AT TERMINATION SHUNT						HARD WIRE SHUNT AT 50 PERCENT POINT OF SHUNT							
				EZ		EX		EZ		EX		50 PERCENT OF EZ VALUE		NO LINEARIZATION				LINEARIZATION COMPLETE			
														EZ		EX		STEP±		EZ	
				NRML	STBY	NRML	STBY	NRML	STBY	NRML	STBY	NRML	STBY	NRML	STBY	NRML	STBY	NRML	STBY	NRML	STBY
T1	Z1=	NORTH	TRACK 1																		
	Z2=	SOUTH	TRACK 1																		
T2	Z1=	NORTH	TRACK 2																		
	Z2=	SOUTH	TRACK 2																		

CALIBRATION HISTORY

INITIAL SET UP BY: _____ DATE: _____

DC VOLTAGE READINGS AFTER CALIBRATION				CALIBRATION HISTORY										LINEARIZATION HISTORY (NOTE 1)							
				EZ/EX VALUES (TRACK UNOCCUPIED)				HARD WIRE SHUNT AT TERMINATION SHUNT						HARD WIRE SHUNT AT 50 PERCENT POINT OF SHUNT							
				EZ		EX		EZ		EX		50 PERCENT OF EZ VALUE		NO LINEARIZATION				LINEARIZATION COMPLETE			
														EZ		EX		STEP±		EZ	
				NRML	STBY	NRML	STBY	NRML	STBY	NRML	STBY	NRML	STBY	NRML	STBY	NRML	STBY	NRML	STBY	NRML	STBY
T1	Z1=	NORTH	TRACK 1																		
	Z2=	SOUTH	TRACK 1																		
T2	Z1=	NORTH	TRACK 2																		
	Z2=	SOUTH	TRACK 2																		

CALIBRATION HISTORY

INITIAL SET UP BY: _____ DATE: _____

DC VOLTAGE READINGS AFTER CALIBRATION				CALIBRATION HISTORY										LINEARIZATION HISTORY (NOTE 1)							
				EZ/EX VALUES (TRACK UNOCCUPIED)				HARD WIRE SHUNT AT TERMINATION SHUNT						HARD WIRE SHUNT AT 50 PERCENT POINT OF SHUNT							
				EZ		EX		EZ		EX		50 PERCENT OF EZ VALUE		NO LINEARIZATION				LINEARIZATION COMPLETE			
														EZ		EX		STEP±		EZ	
				NRML	STBY	NRML	STBY	NRML	STBY	NRML	STBY	NRML	STBY	NRML	STBY	NRML	STBY	NRML	STBY	NRML	STBY
T1	Z1=	NORTH	TRACK 1																		
	Z2=	SOUTH	TRACK 1																		
T2	Z1=	NORTH	TRACK 2																		
	Z2=	SOUTH	TRACK 2																		

NOTE:

1) **SET UP APPROACH LENGTH AND LINEARIZATION CALIBRATION**
VERIFY THAT "ENHANCED DETECTION" MODE IS PROGRAMMED "OFF" BEFORE ATTEMPTING LINEARIZATION PROCEDURES.

PROPOSED
DES. No. _____
RED-IN YELLOW-OUT
AS INSTALLED
DATE _____
BY _____

6' X 6' BUNGALOW

PROPOSED D	PROPOSED M	PROPOSED Y	REVISIONS	D	C	COMPLETED D	COMPLETED M	COMPLETED Y	C

DIVISION MIDWEST
SUB. ST. LOUIS
SD. 1021 C
MP. 36.00 TO 37.60

SIGNALS AND COMMUNICATIONS EDMONTON, ALBERTA
25 FEBRUARY 2008
DES. PEA
CH. RLC

GCP 4000
CALIBRATION HISTORY
MAIN STREET
MARISSA, IL

M 03600C16

SAFETRAN SYSTEM CORP.
LOUISVILLE DIVISION, LOUISVILLE, KY

$FILENAME
$DATE

SAFETRAN SYSTEMS CORPORATION

DES.: PEA	DATE: 02/25/08	JOB NO.: PICA0146A	
CKD.: RLC	ISSUE DATE: N/A	EST. NO. :N/A	
DRN.: PEA	PLAN NO. :N/A	SHEET N/A OF N/A	
P TIME:14:35	P DATE: 19-MAR-2008	CAD ID.: 03600C16	