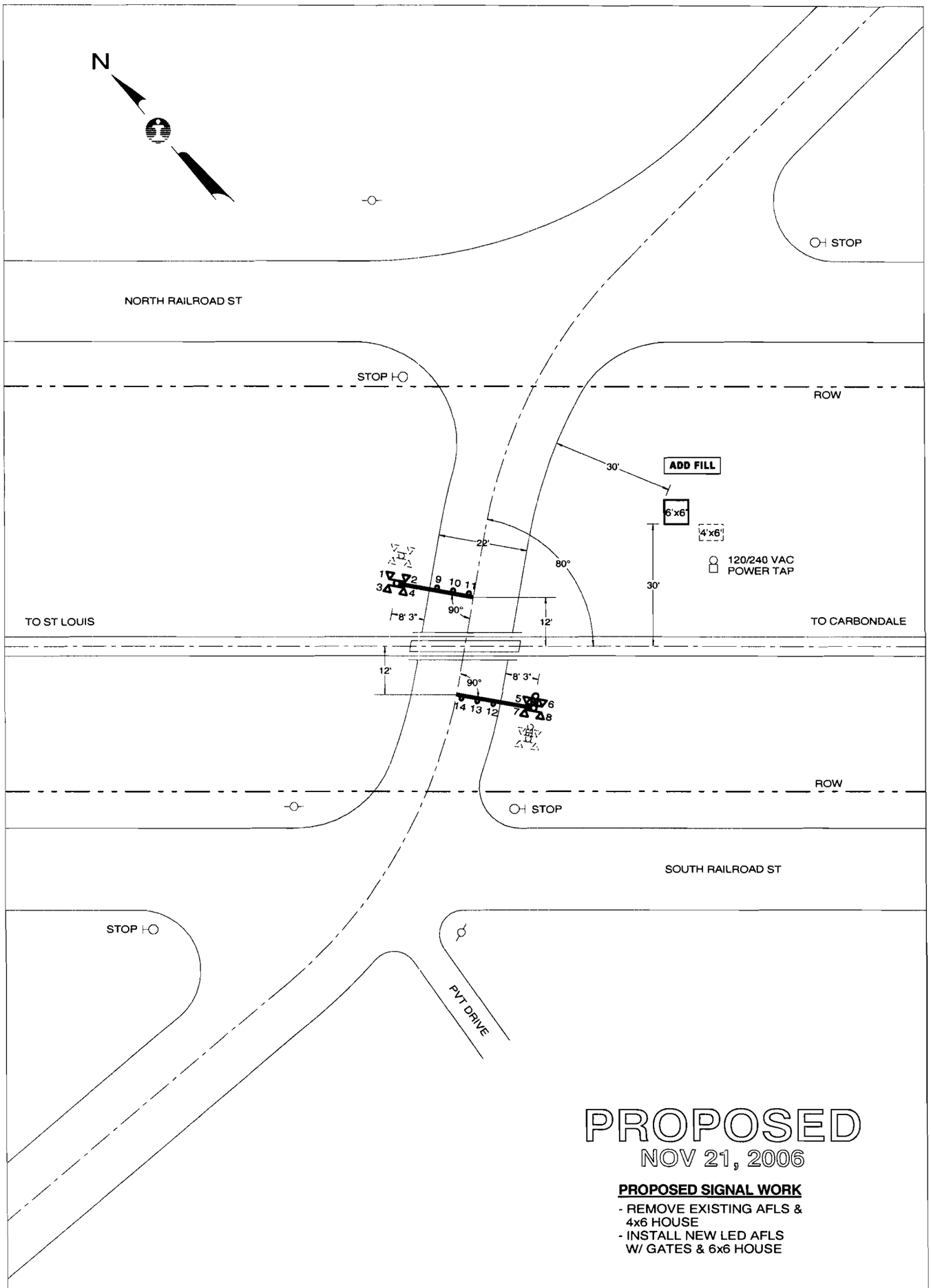


# PROPOSED
NOV 21, 2006

**PROPOSED SIGNAL WORK**

- REMOVE EXISTING AFLS & 4x6 HOUSE
- INSTALL NEW LED AFLS W/ GATES & 6x6 HOUSE

| QUADRANT | NW | SE |
|---|---|---|
| STANDARD AFLS | LED | LED |
| CANTILEVER, FT. | - | - |
| GATE, FT | 19 | 19 |
| ADDED LIGHTS | - | - |
| BARRICADE | - | - |
| MULTI-TK SIGN | - | - |
| BELL | - | X |
| REVISIONS | | |

E:\DWG\STL\03781X.CAD

CN — SIGNALS & COMMUNICATIONS, ENGINEERING DEPARTMENT

| | |
|---|---|
| CITY & STATE: MARISSA, IL | SD 1021 X |
| CROSSING: FINGER HILL RD | DATE: NOV 21, 2006 |
| IC - 37.81-G | DOT - 309 474U |
| MIDWEST DIVISION | ST LOUIS SUBDIVISION |

| IN SERVICE | SCALE | DRAWN BY |
|---|---|---|
| 8/13/1981 | 1"=30' | AVS |

# SD 1021 - MP 36 TO 37

RECEIVED
APR 2 2008
Illinois Commerce Commission
RAIL SAFETY SECTION

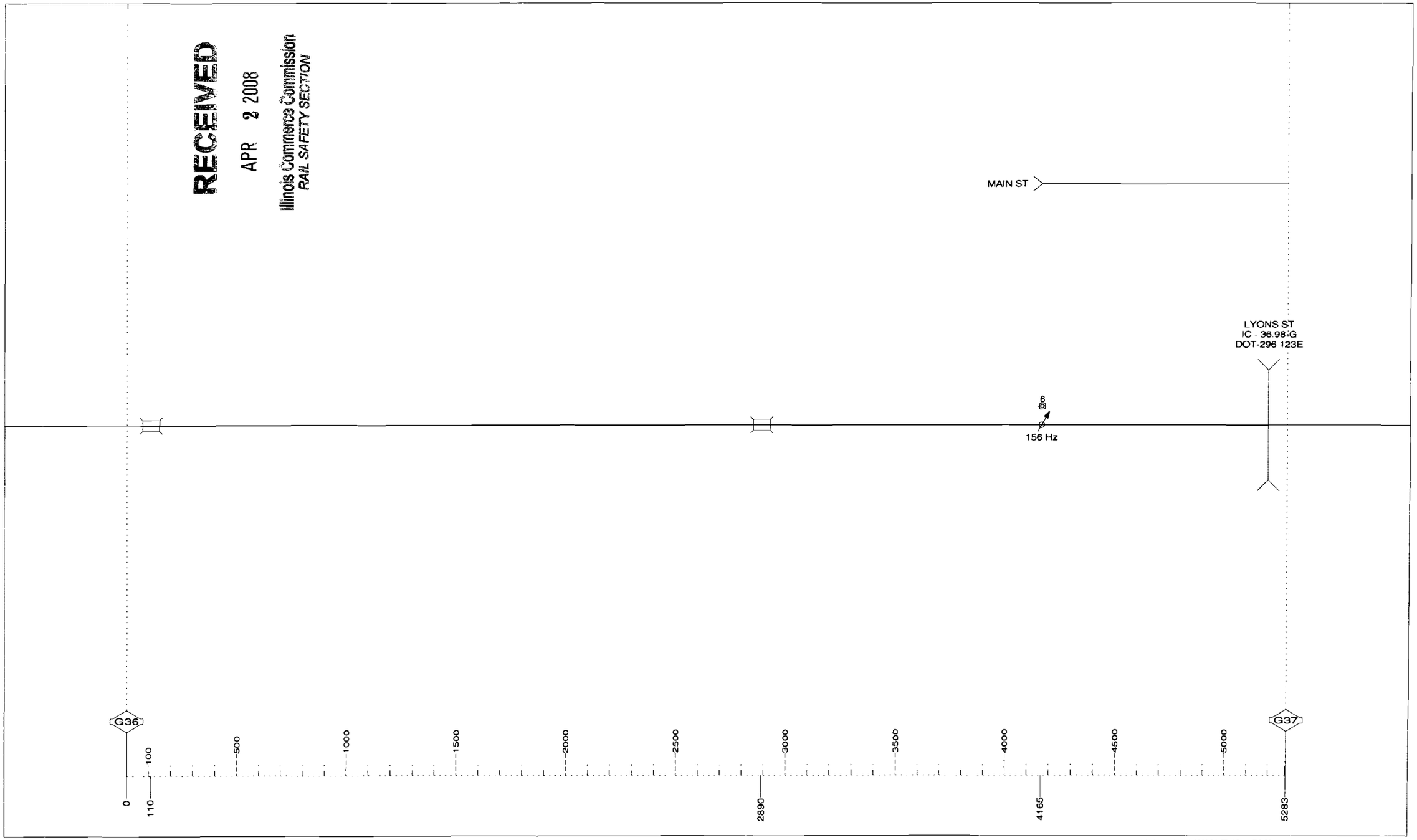

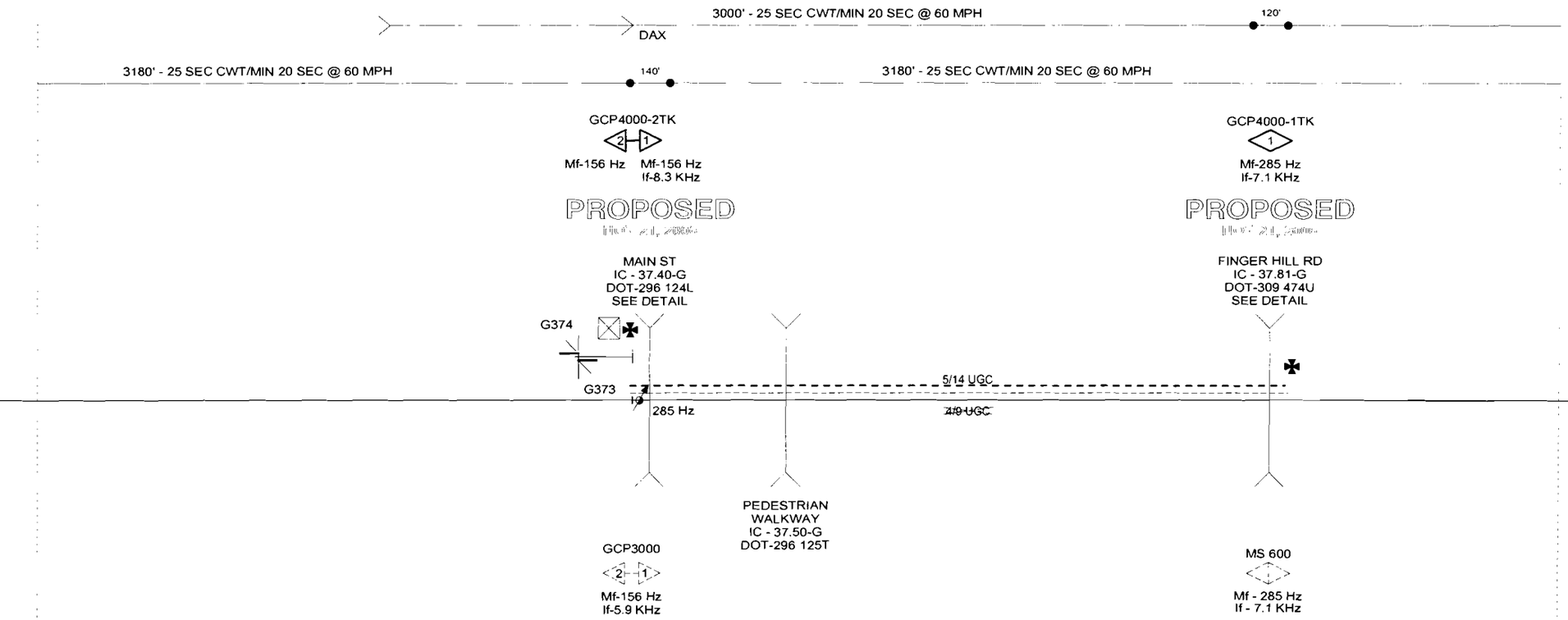


= MARISSA =

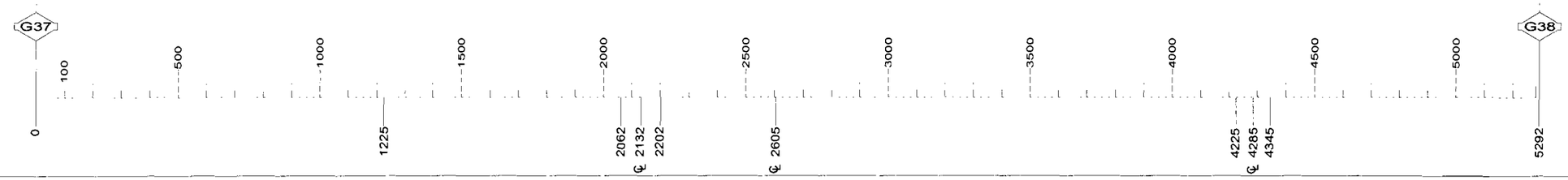


DRAWING SCALE 1" = 500'

# SD 1021 - MP 38 TO 39

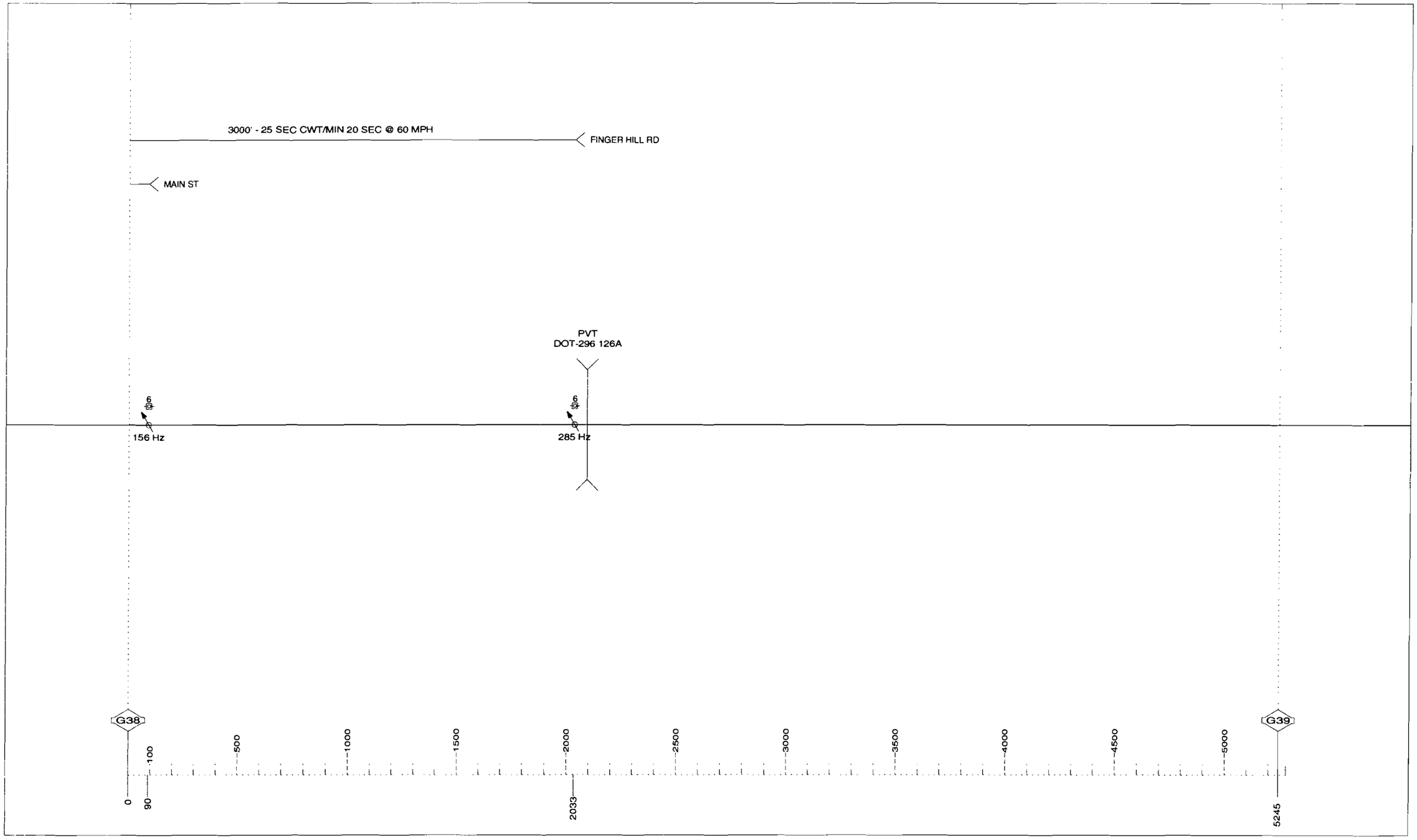


DRAWING SCALE 1" = 500'

WATERMARK

| NO. | DATE | BY | DESCRIPTION | APP. BY |
|---|---|---|---|---|
| 1 | | | | |
| 2 | | | | |
| 3 | | | | |
| 4 | | | | |
| 5 | | | | |

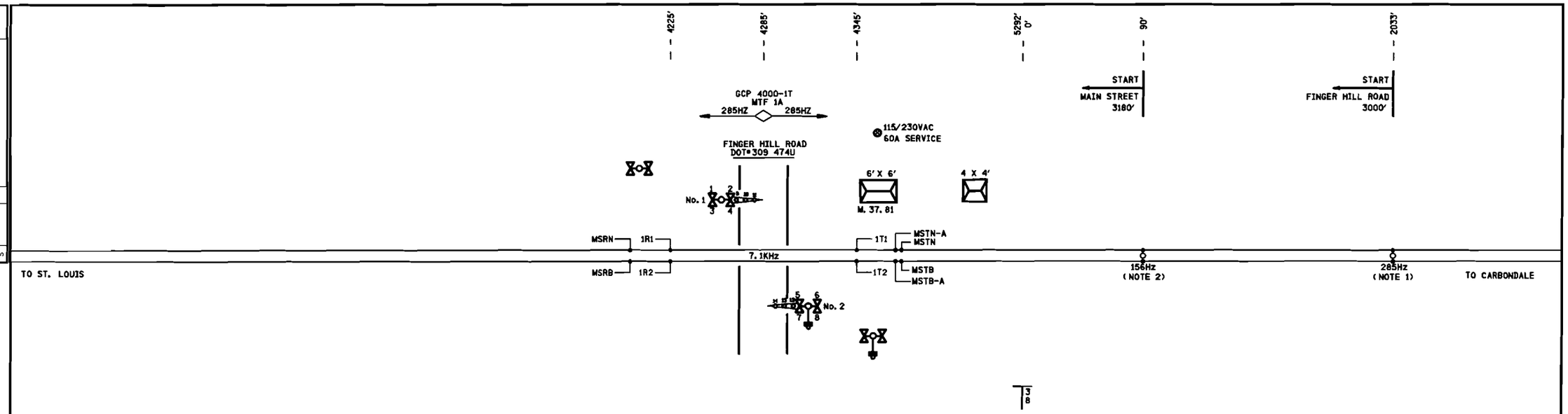


NOTES:

1) DENOTES MULTI-FREQ. NARROW BAND SHUNT 62775-1543.

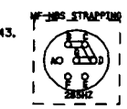


2) DENOTES MULTI-FREQ. NARROW BAND SHUNT 62775-8621.

PROPOSED
DES. No. _____
RED-IN YELLOW-OUT
AS INSTALLED
DATE _____
BY _____

6' X 6' BUNGALOW

| PROPOSED D | M | Y | REVISIONS | D | C | COMPLETED D | M | Y | C |
|---|---|---|---|---|---|---|---|---|---|
| | | | | | | | | | |

DIVISION MIDWEST
SUB. ST. LOUIS
SD. 1021 C
MP. 37.60 TO 38.00

SIGNALS AND COMMUNICATIONS
EDMONTON, ALBERTA
27 FEBRUARY 2008

DES. PEA
CH. RLC

TRACK LAYOUT

FINGER HILL ROAD
MARISSA, IL

M 03760C01

SAFETRAN SYSTEM CORP.
LOUISVILLE DIVISION, LOUISVILLE, KY

| SAFETRAN SYSTEMS CORPORATION | | | |
|---|---|---|---|
| DES. : PEA | DATE: 02/27/08 | JOB NO. : PICA10468 | |
| CKD. : RLC | ISSUE DATE: N/A | EST. NO. : | |
| DRN. : PEA | PLAN NO. : N/A | SHEET N/A OF N/A | |
| P. TIME: 14:18 | P. DATE: 19-MAR-2008 | CAD ID. : 03760C01 | |

FILENAME
DATE

$WATERMARK

| NO. | DATE | BY | DESCRIPTION | APP. BY |
|---|---|---|---|---|
| 1 | | | | |
| 2 | | | | |
| 3 | | | | |
| 4 | | | | |
| 5 | | | | |

REVISIONS

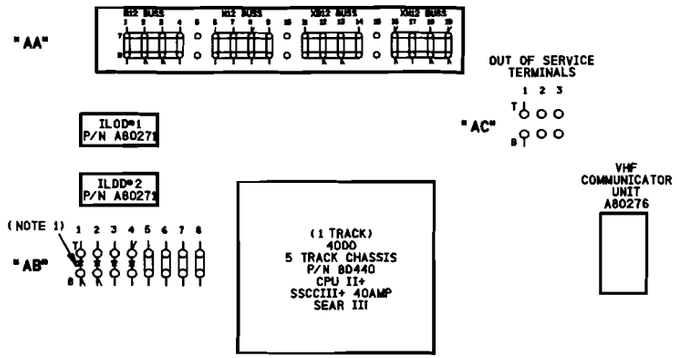


NOTE:

1) ⊣⊢ DENOTES RECTIFIER : (SAFETRAN# 8008A299006)

SIDE" A"

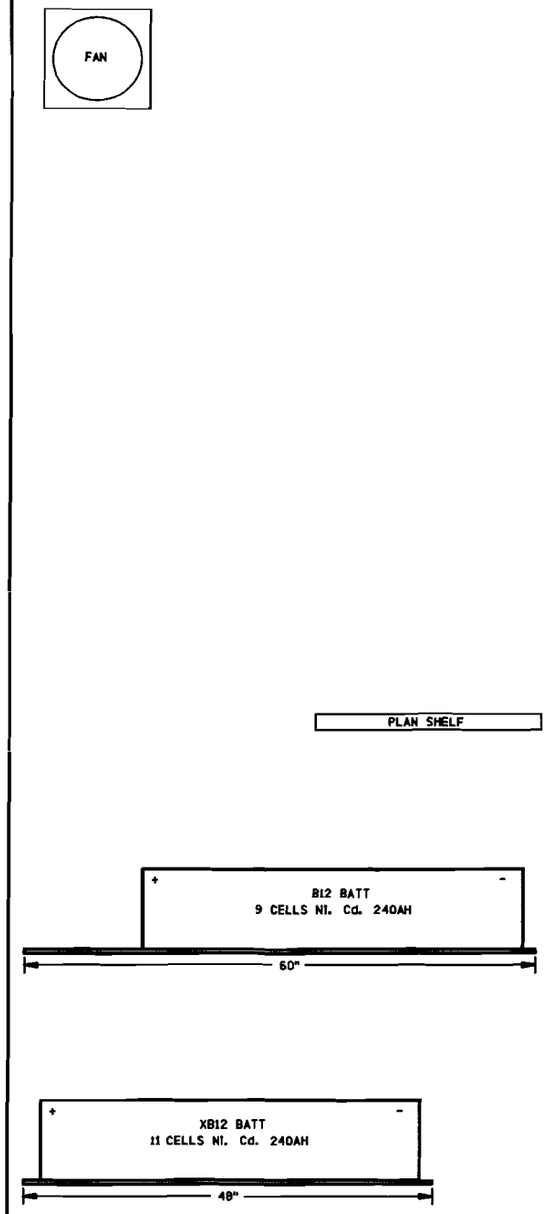


SIDE" B"

PROPOSED
DES. No. _____
RED-IN YELLOW-OUT
AS INSTALLED
DATE _____
BY _____

6' X 6' BUNGALOW

| PROPOSED D | M | Y | REVISIONS | D | C | COMPLETED D | M | Y | C |
|---|---|---|---|---|---|---|---|---|---|
| | | | | | | | | | |

DIVISION MIDWEST
SUB. ST. LOUIS
SD. 1021 C
MP. 37.60 TO 38.00

SIGNALS AND COMMUNICATIONS
EDMONTON, ALBERTA
27 FEBRUARY 2008

DES. PEA
CH. RLC

BUNGALOW LAYOUT
SIDE "A" & "B"
FINGER HILL ROAD
MARISSA, IL

M 03760C02

SAFETRAN SYSTEM CORP.
LOUISVILLE DIVISION, LOUISVILLE, KY

SAFETRAN SYSTEMS CORPORATION

| | | | |
|---|---|---|---|
| DES.: PEA | DATE: 02/27/08 | JOB NO.: PICA101468 | |
| CKD.: RLC | ISSUE DATE: N/A | EST. NO.: | |
| DRN.: PEA | PLAN NO.: N/A | SHEET N/A OF N/A | |
| P TIME: 14:18 | P DATE: 19-MAR-2008 | CAD ID.: 03760C02 | |

$FILENAME
$DATE

$WATERMARK

| NO. | DATE | BY | DESCRIPTION | APP. BY |
|---|---|---|---|---|
| 1 | | | | |
| 2 | | | | |
| 3 | | | | |
| 4 | | | | |
| 5 | | | | |

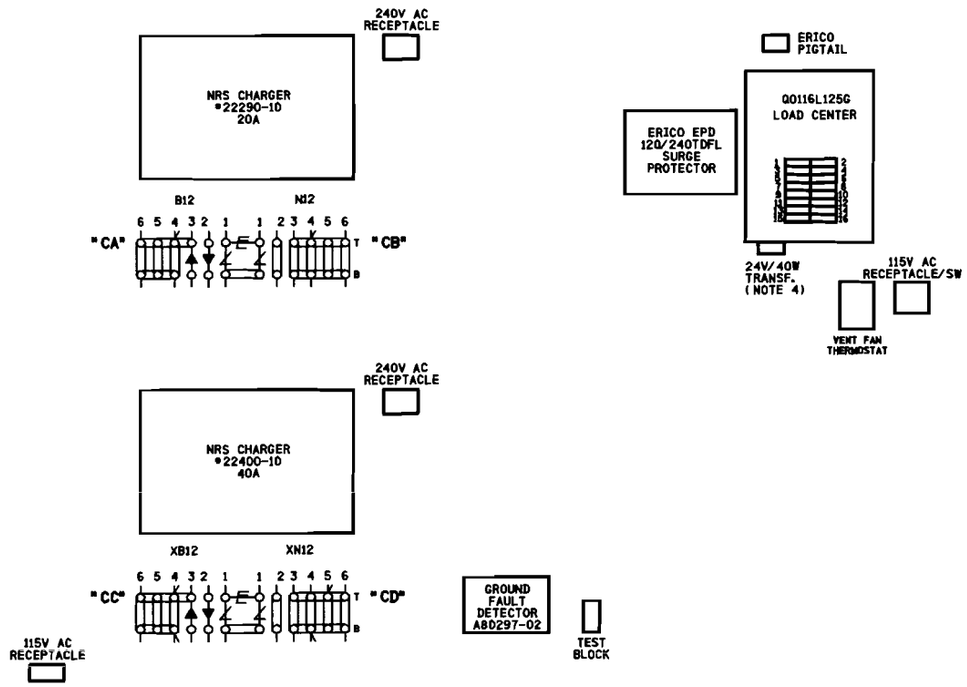


NOTES:

1) ⌿ DENOTES EQUALIZER TYPE: (SAFETRAN #022TDO-1X)
2) ⊣⊢ DENOTES LIGHTNING ARRESTER TYPE: (SAFETRAN #022585-1X)
3) SURGE PROTECTION SHOULD BE BONDED TO BUNGALOW.
4) 24V-40W TRANSFORMER (CN STOCK #02-45-36T)

SIDE "C"

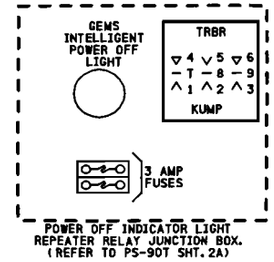


SIDE "D"
ABOVE ENTRY DOOR

PROPOSED
DES. No. _____
RED-IN YELLOW-OUT
AS INSTALLED
DATE _____
BY _____

6' X 6' BUNGALOW

| PROPOSED D | M | Y | REVISIONS | D | C | COMPLETED D | M | Y | C |
|---|---|---|---|---|---|---|---|---|---|
| | | | | | | | | | |

DIVISION MIDWEST
SUB. ST. LOUIS
SO. 1021 C
MP. 37.6D TO 38.00

SIGNALS AND COMMUNICATIONS EDMONTON, ALBERTA — DES. PEA
27 FEBRUARY 2008 — CH. RLC

BUNGALOW LAYOUT
SIDE "C" & OVER DOOR SIDE "D"
FINGER HILL ROAD
MARISSA, IL

M 03760C03

SAFETRAN SYSTEM CORP.
LOUISVILLE DIVISION, LOUISVILLE, KY

SAFETRAN SYSTEMS CORPORATION

| | | | |
|---|---|---|---|
| DES.: PEA | DATE: 02/27/08 | JOB NO.: PICA101468 | |
| CKD.: RLC | ISSUE DATE: N/A | EST. NO.: | |
| DRN.: PEA | PLAN NO.: N/A | SHEET N/A OF N/A | |
| P TIME: 14:18 | P DATE: 19-MAR-2008 | CAD ID.: 03760C03 | |

$FILENAME
$DATE

WATERMARK

| REVISIONS | | | | |
|---|---|---|---|---|
| NO. | DATE | BY | DESCRIPTION | APP. BY |
| 1 | | | | |
| 2 | | | | |
| 3 | | | | |
| 4 | | | | |
| 5 | | | | |

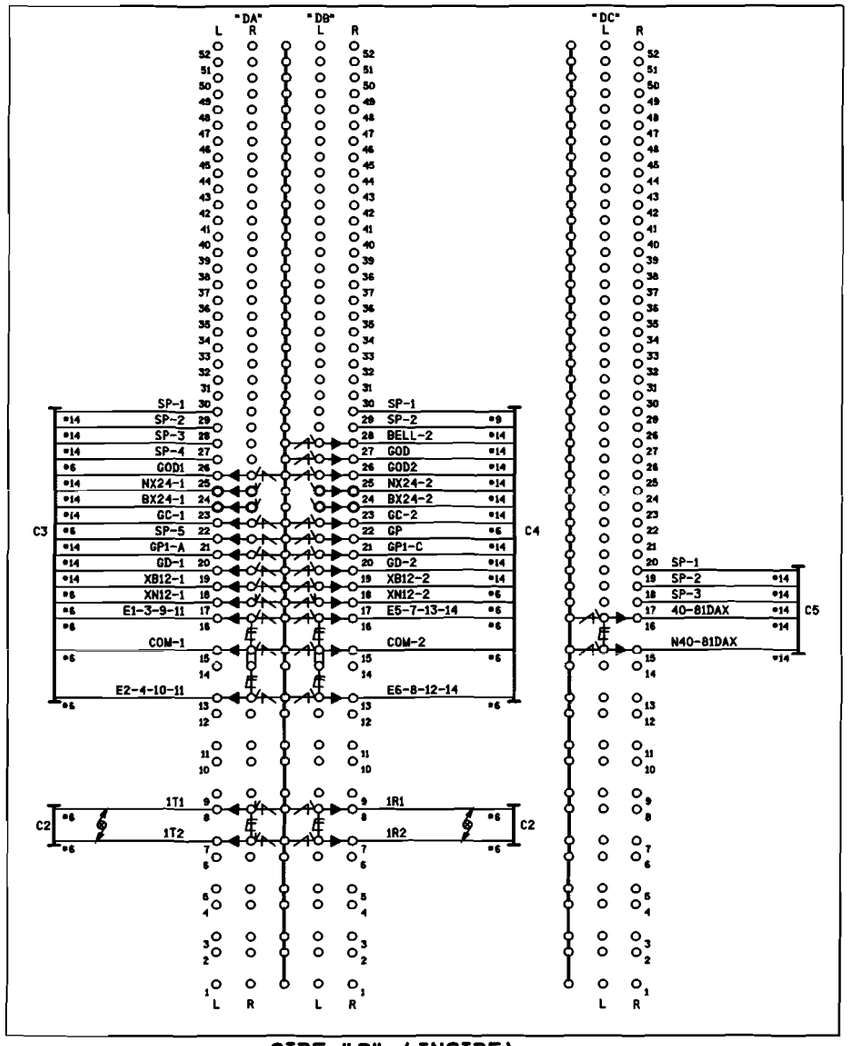


SIDE "D" (INSIDE)

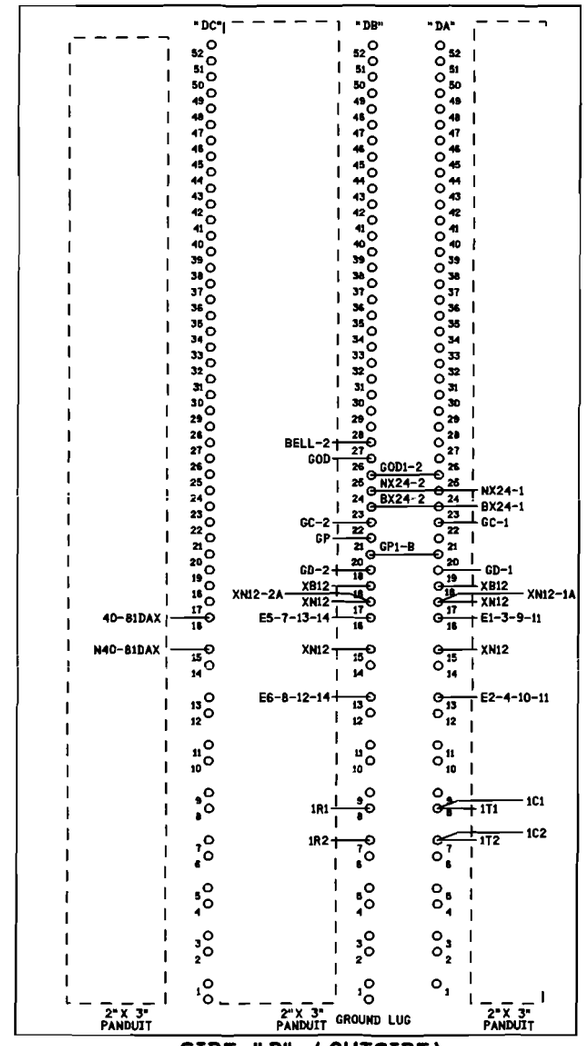


SIDE "D" (OUTSIDE)

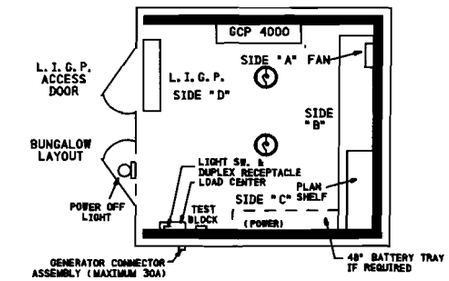


ROOF MOUNTED AC/HEATING UNIT

CABLE CONSIST:

C1-3C#6 TECK 90 U/G TO MAIN SERVICE
C2-(2)-2SC#6 TW. TO TRACK
C3-16C ( 7#6, 9#14) TO GATE (SIG.#1)
C4-16C ( 7#6, 9#14) TO GATE (SIG.#2)
C5-5C#14 TO M.P. 37.40

NOTES:

1) DENOTES LIGHTNING ARRESTER TYPE: (SAFETRAN #022585-1X)
2) DENOTES EQUALIZER TYPE: (SAFETRAN #D22700-1X)
3) DENOTES TWISTED PAIR.
4) ENSURE DOUBLE NUTTING OF ALL TERMINALS.

PROPOSED
DES. No. _____
RED-IN YELLOW-OUT
AS INSTALLED
DATE _____
BY _____

6' X 6' BUNGALOW

| PROPOSED | | | REVISIONS | D | C | COMPLETED | | | C |
|---|---|---|---|---|---|---|---|---|---|
| D | M | Y | | | | D | M | Y | |
| | | | | | | | | | |

DIVISION MIDWEST
SUB. ST. LOUIS
SD. 1021 C
MP. 37.60 TO 38.00

SIGNALS AND COMMUNICATIONS
EDMONTON, ALBERTA
27 FEBRUARY 2008

DES. PEA
CH. RLC

BUNGALOW LAYOUT SIDE "D"
LOW IMPEDANCE GROUND PLANE
FINGER HILL ROAD
MARISSA, IL

M 03760C04

SAFETRAN SYSTEM CORP.
LOUISVILLE DIVISION, LOUISVILLE, KY

SAFETRAN SYSTEMS CORPORATION

| | | | |
|---|---|---|---|
| DES. : PEA | DATE: 02/27/08 | JOB NO.: PICA101468 | |
| CKD. : RLC | ISSUE DATE: N/A | EST. NO.: | |
| DRN. : PEA | PLAN NO.: N/A | SHEET N/A OF N/A | |
| P TIME: 1441B | P DATE: 19-MAR-2008 | CAD ID.: 03760C04 | |

FILENAME
DATE

$WATERMARK

| REVISIONS | | | | |
|---|---|---|---|---|
| NO. | DATE | BY | DESCRIPTION | APP. BY |
| 1 | | | | |
| 2 | | | | |
| 3 | | | | |
| 4 | | | | |
| 5 | | | | |

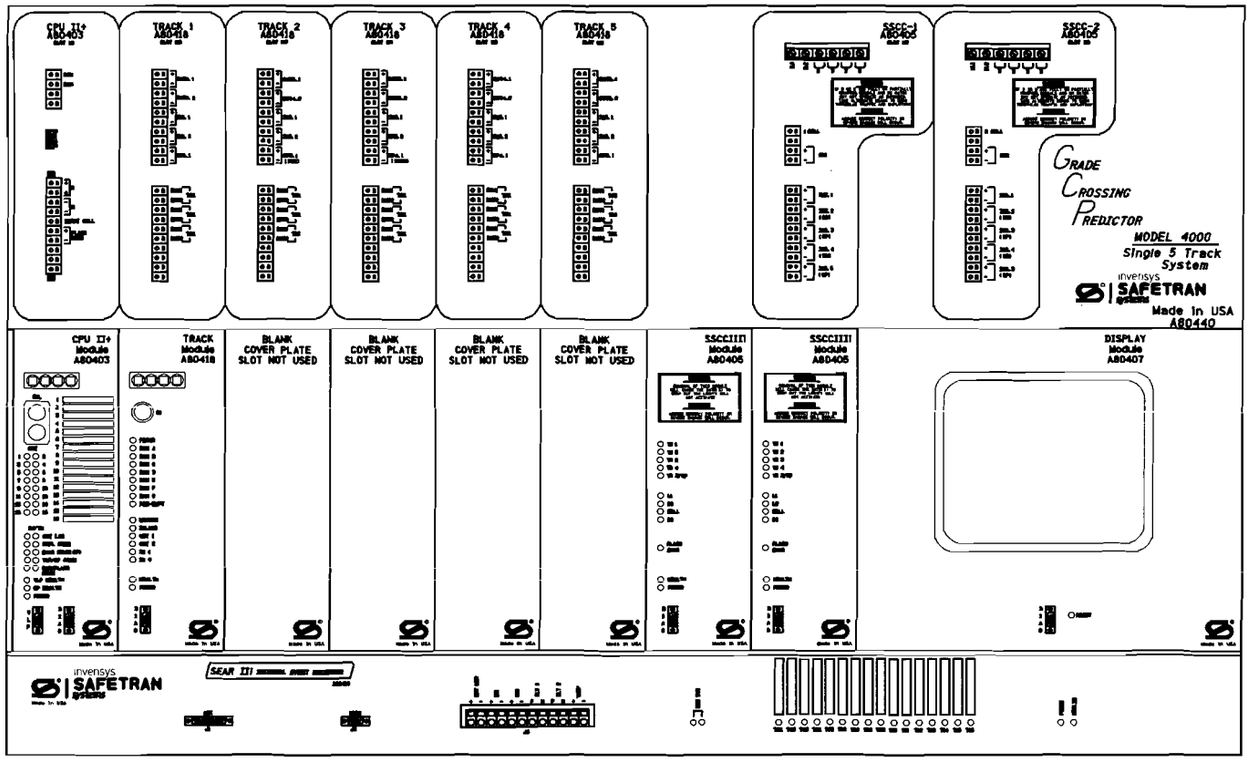


NOTE:

1) DISABLE THE DISPLAY HEATER BY REMOVING JUMPER J-22 (LOCATED AT THE EDGE OF THE DISPLAY MODULE CARD THAT PLUGS INTO THE CHASSIS).

## ATTENTION!

ENSURE THE DISPLAY MODULE HEATER IS DISABLED. LEAVING THE DISPLAY HEATER ENABLE WILL REDUCE THE AMOUNT OF BATTERY STANDBY TIME IN THE EVENT OF AN AC POWER FAILURE.

HEATER FUNCTION IS
JUMPER SELECTABLE ON
THE DISPLAY MODULE BOARD.
THREE OPTIONS ARE AVAILABLE.
NORMAL LCD HTR (DEFAULT)
HI CURRENT
NO JUMPER (HEATER DISABLED)

PROPOSED
DES. No. _____
RED-IN YELLOW-OUT
AS INSTALLED
DATE _____
BY _____

6' X 6' BUNGALOW

| PROPOSED | | | REVISIONS | D | C | COMPLETED | | | C |
|---|---|---|---|---|---|---|---|---|---|
| D | M | Y | | | | D | M | Y | |

DIVISION MIDWEST
SUB. ST. LOUIS
SD. 1021 C
MP. 37.60 TO 38.00

SIGNALS AND COMMUNICATIONS
EDMONTON, ALBERTA

27 FEBRUARY 2008

DES. PEA
CH. RLC

GCP 4000
5 TRK CHASSIS & MODULE LAYOUT
FINGER HILL ROAD
MARISSA, IL

M 03760C05

SAFETRAN SYSTEM CORP.
LOUISVILLE DIVISION, LOUISVILLE, KY

SAFETRAN SYSTEMS CORPORATION

| | | | |
|---|---|---|---|
| DES.: PEA | DATE: 02/27/08 | JOB NO.: PICA101468 | |
| CKD.: RLC | ISSUE DATE: N/A | EST. NO.: | |
| DRN.: PEA | PLAN NO.: N/A | SHEET N/A OF N/A | |
| P. TIME: 14:18 | P. DATE: 19-MAR-2008 | CAD ID.: 03760C05 | |

$FILENAME
$DATE

$WATERMARK

| NO. | DATE | BY | REVISIONS DESCRIPTION | APP. BY |
|---|---|---|---|---|
| 1 | | | | |
| 2 | | | | |
| 3 | | | | |
| 4 | | | | |
| 5 | | | | |

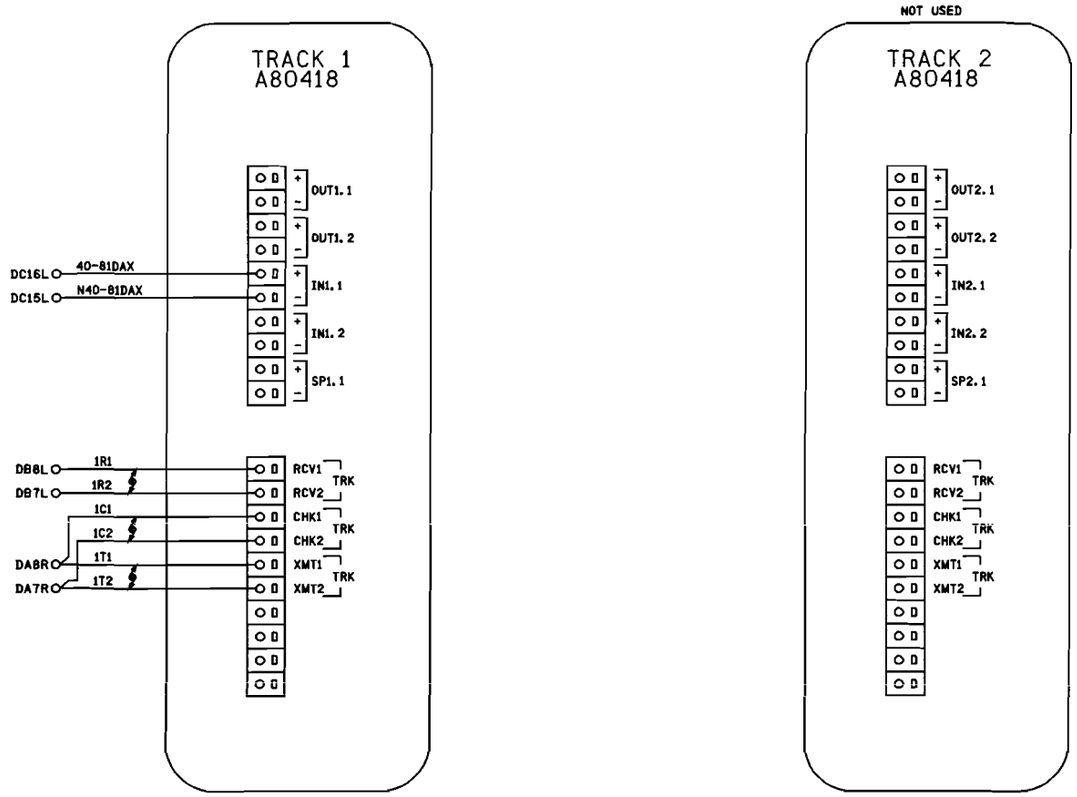


NOTES:

1) ALL WIRING #16 AWG UNLESS OTHERWISE NOTED.

2) DENOTES TWISTED PAIR.

PROPOSED
DES. No. _____
RED-IN YELLOW-OUT

AS INSTALLED
DATE _____
BY _____

6' X 6' BUNGALOW

| PROPOSED D | M | Y | REVISIONS | D | C | COMPLETED D | M | Y | C |
|---|---|---|---|---|---|---|---|---|---|
| | | | | | | | | | |

DIVISION MIDWEST
SUB. ST. LOUIS
SO. 1021 C
MP. 37.60 TO 38.00

SIGNALS AND COMMUNICATIONS
EDMONTON, ALBERTA

27 FEBRUARY 2008

DES. PEA
CH. RLC

GCP 4000
TRACKS 1 & 2 CONNECTIONS
FINGER HILL ROAD
MARISSA, IL

M 03760C06

SAFETRAN SYSTEM CORP.
LOUISVILLE DIVISION, LOUISVILLE, KY

SAFETRAN SYSTEMS CORPORATION

| | | | |
|---|---|---|---|
| DES.: PEA | DATE: 03/27/08 | JOB NO.: PICA101468 | |
| CKD.: RLC | ISSUE DATE: N/A | EST. NO.: | |
| DRN.: PEA | PLAN NO.: N/A | SHEET N/A OF N/A | |
| P TIME: 14:18 | P DATE: 19-MAR-2008 | CAD ID.: 03760C06 | |

#FILENAME
#DATE

WATERMARK

| NO. | DATE | BY | DESCRIPTION | APP. BY |
|---|---|---|---|---|
| 1 | | | | |
| 2 | | | | |
| 3 | | | | |
| 4 | | | | |
| 5 | | | | |

REVISIONS

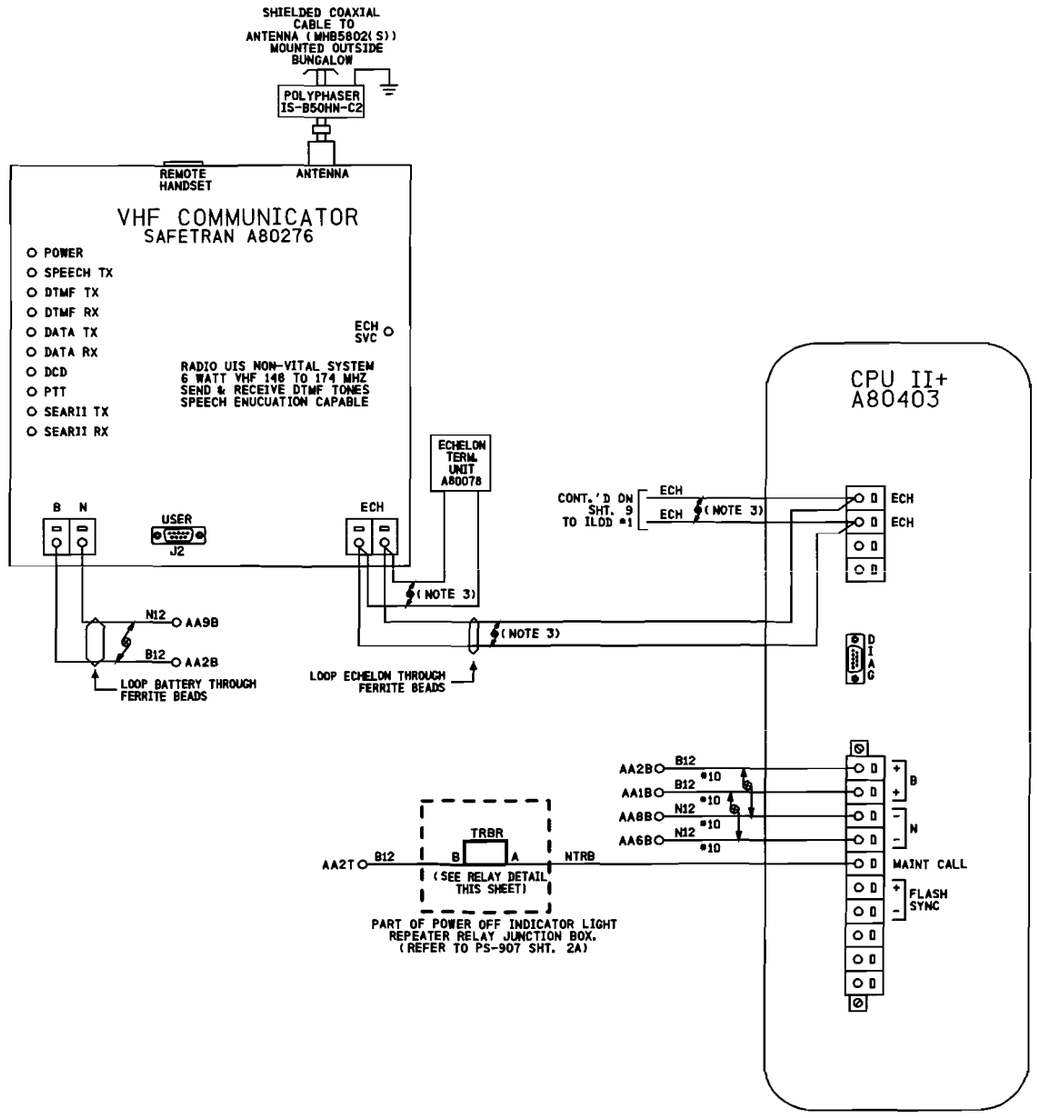


RELAY DETAIL

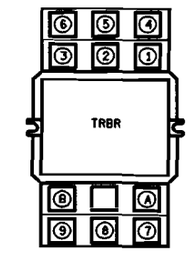


LOCATED OVER ENTRY DOOR

RELAY - POTTER & BRUMFIELD
MODEL KUMP-14D18-12 SOCKET MOUNTABLE
12 VDC W/ 3 FORM C CONTACTS.

SOCKET - SCREW TERMINAL
MODEL 27E121.

RELAY WIRING DIAGRAM (REAR VIEW)

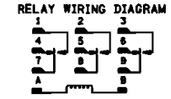


NOTE:
SOCKET NUMBERING CORRESPONDS DIRECTLY WITH RELAY NUMBERING.
(COIL SHOWN ENERGIZED)

NOTES:
1) ALL WIRING #16 AWG UNLESS OTHERWISE NOTED.
2) DENOTES TWISTED PAIR.
3) USE BELDEN CABLE, PART #8461-u500-60 FOR ALL ECHELON AND LAN WIRING.

PROPOSED
DES. No. _____
RED-IN YELLOW-OUT
AS INSTALLED
DATE _____
BY _____

6' X 6' BUNGALOW

| PROPOSED D | M | Y | REVISIONS | D | C | COMPLETED D | M | Y | C |
|---|---|---|---|---|---|---|---|---|---|
| | | | | | | | | | |

DIVISION MIDWEST
SUB. ST. LOUIS
SD. 1021 C
MP. 37.60 TO 38.00

SIGNALS AND COMMUNICATIONS EDMONTON, ALBERTA
DES. PEA
27 FEBRUARY 2008
CH. RLC

GCP 4000
CPUII+ & VHF COMMUNICATOR
FINGER HILL ROAD
MARISSA, IL

M 03760C07

SAFETRAN SYSTEM CORP.
LOUISVILLE DIVISION, LOUISVILLE, KY

SAFETRAN SYSTEMS CORPORATION

| | | | |
|---|---|---|---|
| DES.: PEA | DATE: 02/27/08 | JOB NO.: PICA01468 | |
| CKD.: RLC | ISSUE DATE: N/A | EST. NO.: | |
| DRN.: PEA | PLAN NO.: N/A | SHEET N/A OF N/A | |
| P TIME: 14:18 | P DATE: 19-MAR-2008 | CAD ID.: 03760C07 | |

FILENAME
DATE

$WATERMARK

| NO. | DATE | BY | DESCRIPTION | APP. BY |
|---|---|---|---|---|
| 1 | | | | |
| 2 | | | | |
| 3 | | | | |
| 4 | | | | |
| 5 | | | | |

REVISIONS

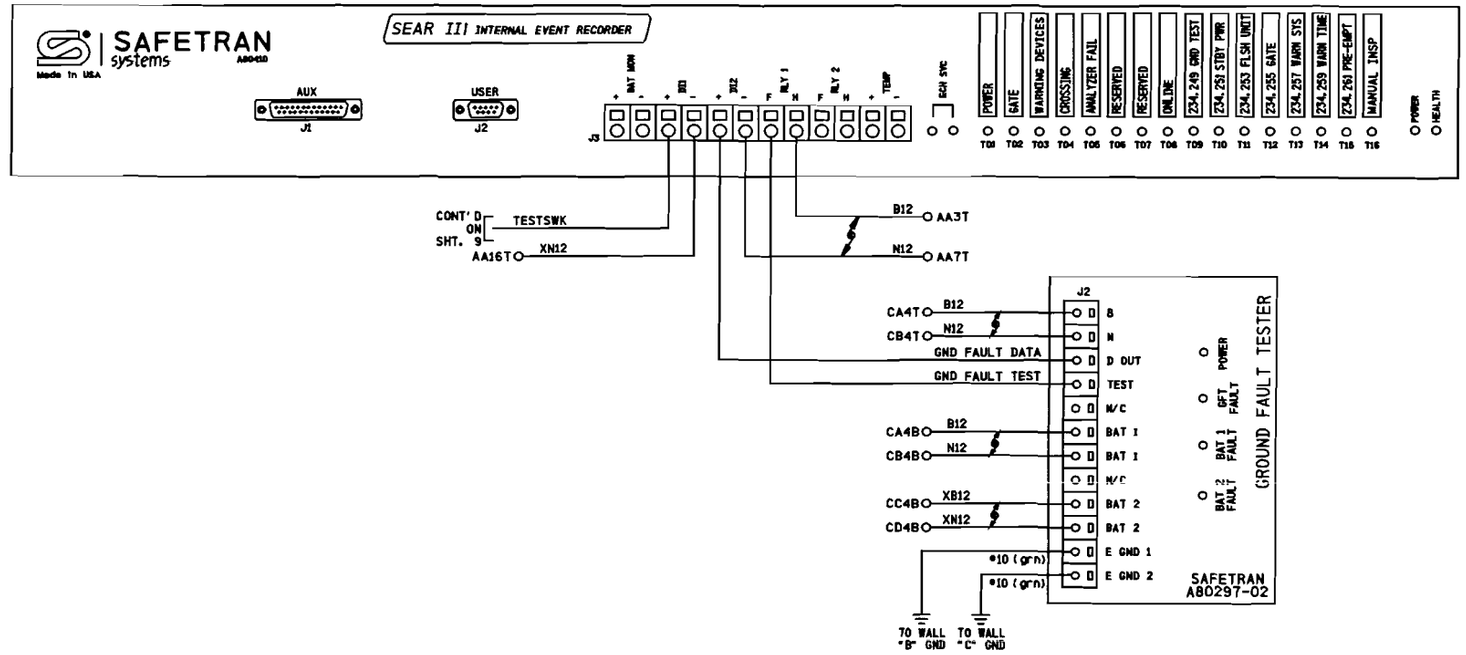


NOTES:

1) ALL WIRING #16 AWG UNLESS OTHERWISE NOTED.

2) ⚡ DENOTES TWISTED PAIR.

PROPOSED
DES. No. _____
RED-IN YELLOW-OUT
AS INSTALLED
DATE _____
BY _____

6' X 6' BUNGALOW

| PROPOSED D | PROPOSED M | PROPOSED Y | REVISIONS | D | C | COMPLETED D | COMPLETED M | COMPLETED Y | C |
|---|---|---|---|---|---|---|---|---|---|
| | | | | | | | | | |

DIVISION MIDWEST
SUB. ST. LOUIS
SD. 1021 C
MP. 37.60 TO 38.00

SIGNALS AND COMMUNICATIONS
EDMONTON, ALBERTA

DES. PEA
CH. RLC

27 FEBRUARY 2008

GCP 4000/SEAR III
INTERNAL EVENT ANALYZER WITH GFT
FINGER HILL ROAD
MARISSA, IL

M 03760C08

SAFETRAN SYSTEM CORP.
LOUISVILLE DIVISION, LOUISVILLE, KY

SAFETRAN SYSTEMS CORPORATION

| | | | |
|---|---|---|---|
| DES.: PEA | DATE: 02/27/08 | JOB NO.: PICA1D146B | |
| CKD.: RLC | ISSUE DATE: N/A | EST. NO.: | |
| DRN.: PEA | PLAN NO.: N/A | SHEET N/A OF N/A | |
| P TIME: 14:18 | P DATE: 19-MAR-2008 | CAD IO.: 03760C08 | |

#FILENAME
#DATE

$WATERMARK

| NO. | DATE | BY | DESCRIPTION | APP. BY |
|---|---|---|---|---|
| 1 | | | | |
| 2 | | | | |
| 3 | | | | |
| 4 | | | | |
| 5 | | | | |

REVISIONS

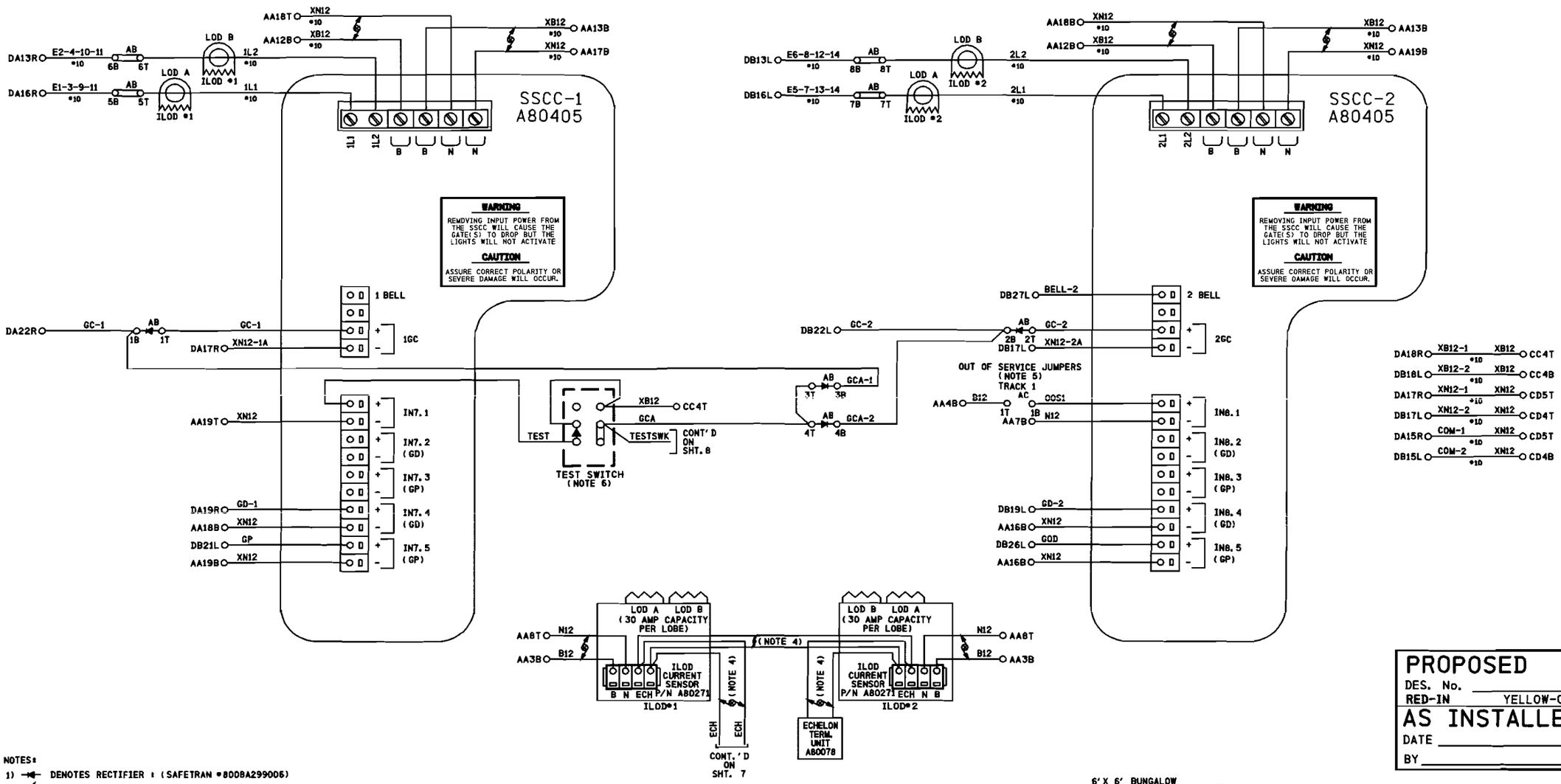


NOTES:

1) DENOTES RECTIFIER : (SAFETRAN #800BA299006)

2) DENOTES TWISTED PAIR.

3) ALL WIRING TO BE #16 AWG MINIMUM UNLESS OTHERWISE NOTED.

4) USE BELDEN CABLE, PART #8461-U500-60 FOR ALL ECHELON AND LAN WIRING.

5) TO TAKE TRACK 1 (T1) OUT OF SERVICE, JUMPER AC1T TO AC1B

6) IF LINK IS CONNECTED BETWEEN XB12 AND TESTSWK TERMINAL GATES WILL REMAIN IN UP POSTION.

PROPOSED
DES. No. _____
RED-IN YELLOW-OUT
AS INSTALLED
DATE _____
BY _____

6' X 6' BUNGALOW

| PROPOSED D | M | Y | REVISIONS | D | C | COMPLETED D | M | Y | C |
|---|---|---|---|---|---|---|---|---|---|
| | | | | | | | | | |

DIVISION MIDWEST
SUB. ST. LOUIS
SD. 1021 C
MP. 37.60 TO 38.00

SIGNALS AND COMMUNICATIONS EDMONTON, ALBERTA
27 FEBRUARY 2008
DES. PEA
CH. RLC

GCP 4000 SSCC3+ MODULE
ISOLATED GATE 40AMP CONTROLLER
FINGER HILL ROAD
MARISSA, IL

M 03760C09

SAFETRAN SYSTEM CORP.
LOUISVILLE DIVISION, LOUISVILLE, KY

SAFETRAN SYSTEMS CORPORATION

| | | | |
|---|---|---|---|
| DES.: PEA | DATE: 02/27/08 | JOB NO.: PTCA10146B | |
| CKD.: RLC | ISSUE DATE: N/A | EST. NO.: | |
| DRN.: PEA | PLAN NO.: N/A | SHEET N/A OF N/A | |
| P TIME: 14:19 | P DATE: 19-MAR-2008 | CAD ID.: 03760C09 | |

$FILENAME
$DATE

$WATERMARK

| NO. | DATE | BY | DESCRIPTION | APP. BY |
|---|---|---|---|---|
| 1 | | | | |
| 2 | | | | |
| 3 | | | | |
| 4 | | | | |
| 5 | | | | |

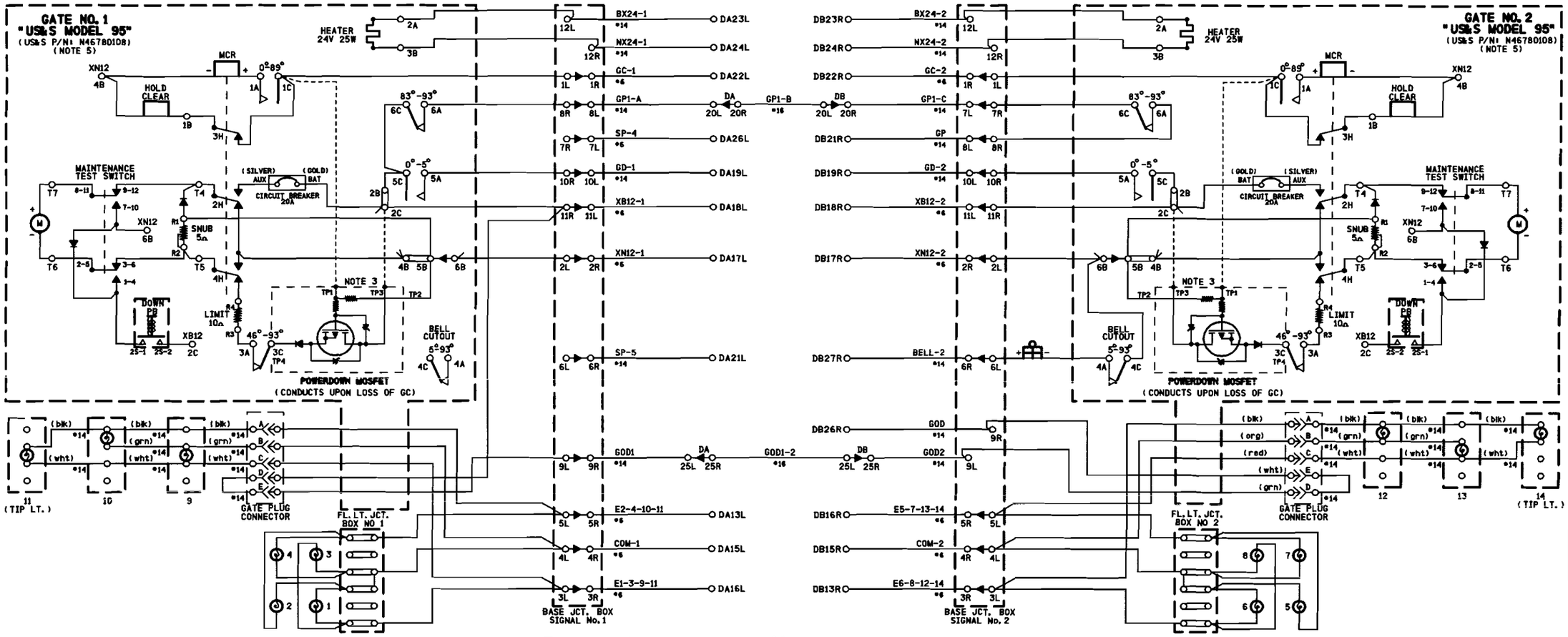


NOTES:

1) ON GATE No. 1 ADD STRAP BETWEEN TERMINAL 2B & 2C, ADD JUMPER BETWEEN TERMINAL 2B & 5C, BETWEEN TERMINAL 5C & 6C
2) ON GATE No. 2 ADD STRAP BETWEEN TERMINAL 2B & 2C ADD JUMPER BETWEEN TERMINAL 2B & 5C AND CONNECT GP AS SHOWN
3) POWERDOWN PCB TERMINALS TP1, TP3 & TP4 FIT OVER TERMINALS 1C, 2C & 3C RESPECTIVELY
4) ALL WIRING #10 AWG MINIMUM UNLESS OTHERWISE NOTED. WIRE SIZES SHOWN ARE MINIMUM GAUGE.
5) GATE DESCENT TIME (RELEASE FROM VERTICAL TO FULLY HORIZONTAL) TO BE WITHIN 11 SECONDS.
6) ENSURE ALL TERMINALS HAVE TWO SHOULDER NUTS.

PROPOSED
DES. No. _____
RED-IN YELLOW-OUT
AS INSTALLED
DATE _____
BY _____

6' X 6' BUNGALOW

| PROPOSED D | M | Y | REVISIONS | D | C | COMPLETED D | M | Y | C |
|---|---|---|---|---|---|---|---|---|---|
| | | | | | | | | | |

DIVISION MIDWEST
SUB. ST. LOUIS
SD. 1021 C
MP. 37.60 TO 38.00

SIGNALS AND COMMUNICATIONS EDMONTON, ALBERTA — DES. PEA
27 FEBRUARY 2008 — CH. RLC

GATE MECHANISM CONTROL CIRCUITS
USS MODEL 95
FINGER HILL ROAD
MARISSA, IL

M 03760C010

SAFETRAN SYSTEM CORP.
LOUISVILLE DIVISION, LOUISVILLE, KY

SAFETRAN SYSTEMS CORPORATION

| | | | |
|---|---|---|---|
| DES. : PEA | DATE: 02/27/08 | JOB NO. : PICA101468 | |
| CKD. : RLC | ISSUE DATE: N/A | EST. NO. : | |
| DRN. : PEA | PLAN NO. : N/A | SHEET N/A OF N/A | |
| P TIME: 14:19 | P DATE: 19-MAR-2008 | CAD ID. : 03760C010 | |

#FILENAME
#DATE

WATERMARK

| NO. | DATE | BY | DESCRIPTION | APP. BY |
|---|---|---|---|---|
| 1 | | | | |
| 2 | | | | |
| 3 | | | | |
| 4 | | | | |
| 5 | | | | |

REVISIONS

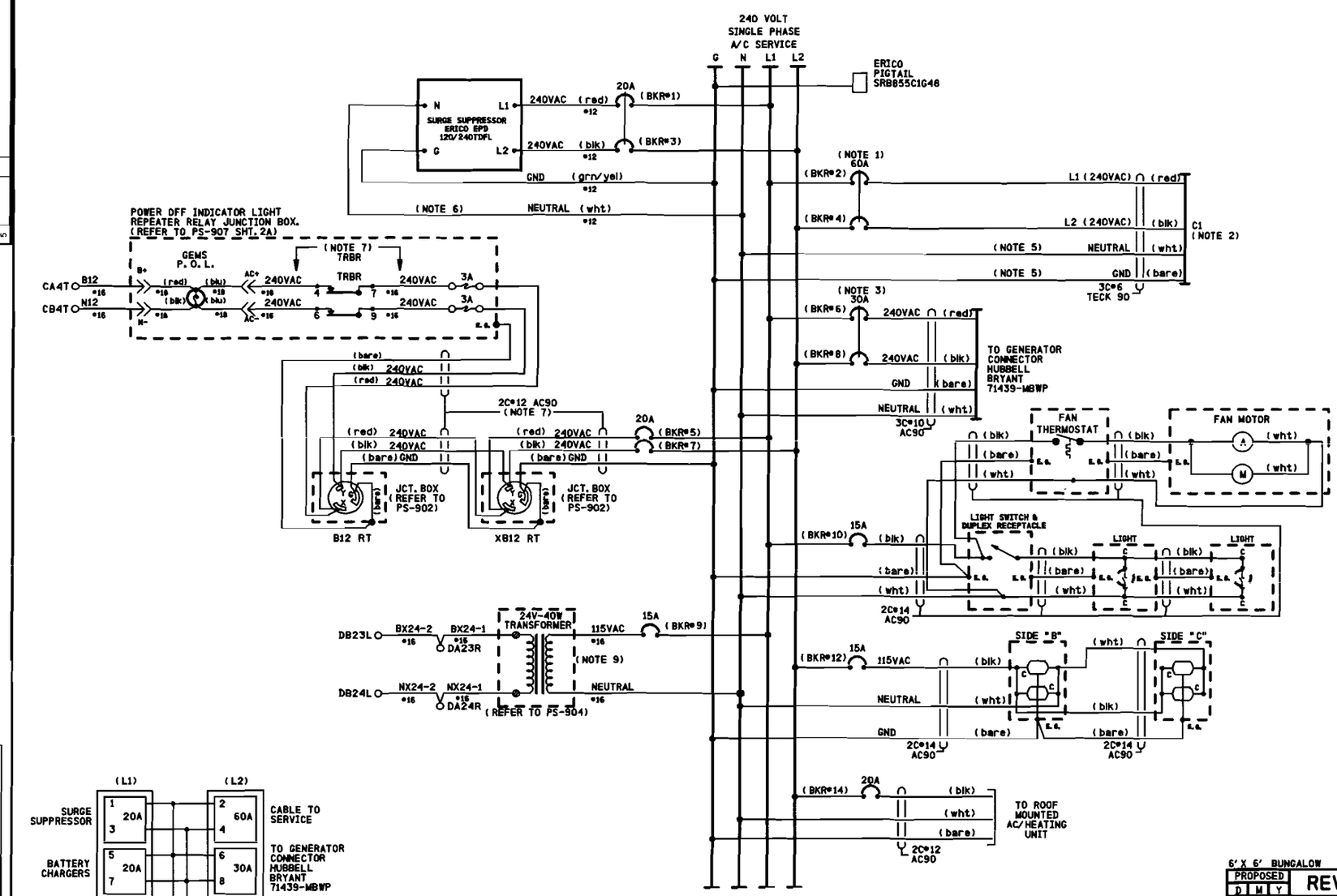


NOTES:

1) CIRCUIT BREAKER NOT TO EXCEED 60 AMPERES. RETAINING KIT PK4WB2LA MUST BE USED WITH 60A BREAKER.
2) FEEDER CIRCUIT BREAKER, AT STUB POLE SERVICE PANEL, NOT TO EXCEED 60 AMPERES.
3) A SWITCH TRANSFER KIT MUST BE INSTALLED BETWEEN THE SERVICE DISCONNECT BREAKER AND THE GENERATOR HOOK UP.
4) WHERE SEPARATE GROUND WIRE EXISTS BETWEEN THE SERVICE AND THE LOAD CENTER, REMOVE THE BRASS COLORED BONDING SCREW. (REFER TO SCHEMATIC ON BOX COVER FOR EXACT LOCATION)
5) S.C. #6 STRANDED, CSA TYPE R90 (X-LINK)
6) KEEP LEADS AS SHORT AS POSSIBLE
7) THE WHITE CONDUCTOR MUST BE MADE PERMANENTLY UNIDENTIFIABLE BY TAPING THIS CONDUCTOR RED. TAPING MUST BE CONTINUOUS WHERE THE SEPARATE CONDUCTORS HAVE BEEN MADE ACCESSIBLE AND VISIBLE.
8) « DENOTES WAGO TERMINAL
9) 24 VOLT - 40 WATT TRANSFORMER (CN STOCK #02-45-367)

FILENAME
DATE

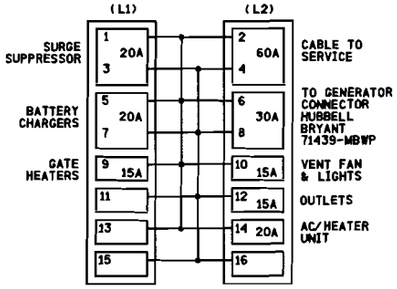


BREAKER POSITIONS

PROPOSED
DES. No.
RED-IN YELLOW-OUT
AS INSTALLED
DATE
BY

6' X 6' BUNGALOW

| PROPOSED D | M | Y | REVISIONS | D | C | COMPLETED D | M | Y | C |
|---|---|---|---|---|---|---|---|---|---|
| | | | | | | | | | |

DIVISION MIDWEST
SUB. ST. LOUIS
SD. 1021 C
MP. 37.60 TO 38.00

SIGNALS AND COMMUNICATIONS
EDMONTON, ALBERTA
27 FEBRUARY 2008

DES. PEA
CH. RLC

POWER DISTRIBUTION
AC
FINGER HILL ROAD
MARISSA, IL

M 03760C011

SAFETRAN SYSTEM CORP.
LOUISVILLE DIVISION, LOUISVILLE, KY

SAFETRAN SYSTEMS CORPORATION

| | | | |
|---|---|---|---|
| DES.: PEA | DATE: 02/27/08 | JOB NO.: PICA10146B | |
| CKD.: RLC | ISSUE DATE: N/A | EST. NO.: 03760C011 | |
| DRN.: PEA | PLAN NO.: N/A | SHEET N/A OF N/A | |
| P TIME: 14:19 | P DATE: 19-MAR-2008 | CAD ID.: 03760C011 | |

$WATERMARK

| NO. | DATE | BY | DESCRIPTION | APP. BY |
|---|---|---|---|---|
| 1 | | | | |
| 2 | | | | |
| 3 | | | | |
| 4 | | | | |
| 5 | | | | |

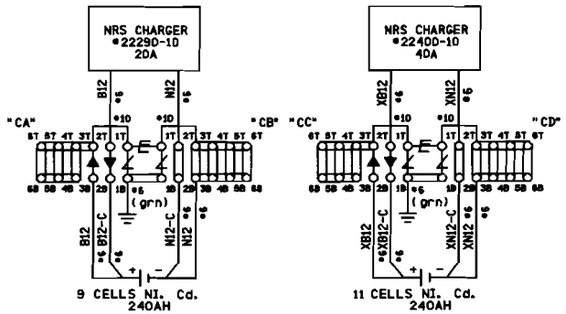





| | | | | | |
|---|---|---|---|---|---|
| CA6T | B12 #10 | AA1T | CC6T | XB12 #10 | AA11T |
| CA6B | B12 #10 | AA4T | CC6B | XB12 #10 | AA14T |
| CB6T | N12 #10 | AA6T | CD6T | XN12 #10 | AA16T |
| CB6B | N12 #10 | AA9T | CD6B | XN12 #10 | AA19T |

$FILENAME
$DATE

PROPOSED
DES. No. _____
RED-IN YELLOW-OUT
AS INSTALLED
DATE _____
BY _____

6' X 6' BUNGALOW

| PROPOSED D | M | Y | REVISIONS | D | C | COMPLETED D | M | Y | C |
|---|---|---|---|---|---|---|---|---|---|
| | | | | | | | | | |

DIVISION MIDWEST
SUB. ST. LOUIS
SD. 1021 C
MP. 37.60 TO 38.00

SIGNALS AND COMMUNICATIONS
EDMONTON, ALBERTA
27 FEBRUARY 2008

DES. PEA
CH. RLC

POWER DISTRIBUTION
DC
FINGER HILL ROAD
MARISSA, IL

M 03760C012

SAFETRAN SYSTEM CORP.
LOUISVILLE DIVISION, LOUISVILLE, KY

SAFETRAN SYSTEMS CORPORATION

| | | | |
|---|---|---|---|
| DES.: PEA | DATE: 02/27/08 | JOB NO.: PIC410146B | |
| CKD.: RLC | ISSUE DATE: N/A | EST. NO.: | |
| DRN.: PEA | PLAN NO.: N/A | SHEET N/A OF N/A | |
| P TIME: 14:19 | P DATE: 19-MAR-2008 | CAD ID.: 03760C012 | |

$WATERMARK

| NO. | DATE | BY | DESCRIPTION | APP. BY |
|---|---|---|---|---|
| 1 | | | | |
| 2 | | | | |
| 3 | | | | |
| 4 | | | | |
| 5 | | | | |

REVISIONS

Program Report
---

Location and SIN
---

DOT Number: 309474U
Milepost Number: 37.81
Site Name: FINGER HILL ROAD

SIN: 762010010016

MCF and Template Selection
---

MCF Name: GCP-T6X-01-2.mcf
MCF Revision: 012
MCFCRC: 0DFE7A0C

Template = 1A:6 Trk BI

Program
---

BASIC: module configuration
Track 1 Slot = Track
Track 2/RIO 1 Slot = Not Used
Track 3 Slot = Not Used
Track 4 Slot = Not Used
Track 5/RIO 2 Slot = Not Used
Track 6/RIO 3 Slot = Not Used
SSCC-1 Slot = SSCC31
SSCC-2 Slot = SSCC31
SEAR Used = Yes

BASIC: MS/GCP operation
Track 1 : MS/GCP Operation = Yes

BASIC: island operation
Track 1 : Island Used = Internal

BASIC: preemption
Preempt Logic = No

BASIC: radio Dax links
Radio DAX link A Used = No
Radio DAX link B Used = No

BASIC: VitalComms links
VitalComms link 1 Used = No
VitalComms link 2 Used = No

PREDICTORS: track 1
Track 1 : Prime Used = Yes
Track 1 : Dax A Used = No
Track 1 : Dax B Used = No
Track 1 : Dax C Used = No
Track 1 : Dax D Used = No
Track 1 : Dax E Used = No
Track 1 : Dax F Used = No
Track 1 : Dax G Used = No

GCP: track 1
Track 1 : GCP Freq Category = Standard
Track 1 : GCP Frequency = 285 Hz
Track 1 : Approach Distance = 3000 ft
Track 1 : Uni/Bi/Sim-Bidirnl = Bidirnl
Track 1 : GCP Transmit Level = High
Track 1 : Island Connection = Isl1
Track 1 : Island Distance = 120 ft
Track 1 : Computed Distance = 9999 ft
Track 1 : Linearization Steps = 100

GCP: track 1 prime
Track 1 : Prime Warning Time = 25 sec
Track 1 : Prime Offset Distance = 0 ft
Track 1 : Switch MS EZ Level = 10
Track 1 : Prime MS/GCP Mode = Pred
Track 1 : Prime Pickup Delay = 30 sec
Track 1 : Prime UAX = IP
Track 1 : Prime UAX Pickup = 30 sec

GCP: track 1 low EZ detect
Track 1 : Low EZ Detection Used = No
Track 1 : Positive Start = Off
Track 1 : Enhanced Detectn Used = Yes
Track 1 : Station Stop Timer = 10 sec
Track 1 : False Activate Level = Normal
Track 1 : Poor Shunting Level = 2

GCP: track 1 MS Control
Track 1 : MS/GCP CtrlIP Used = No
Track 1 : MS Sensitivity Level = 0
Track 1 : Compensation Level = 1300
Track 1 : Low EX Adjustment = 39
Track 1 : Bidirn Dax Passthru = No

ISLAND: track 1
Track 1 : IslFrequency = 7.1 kHz
Track 1 : Pickup Delay (2s +) = 0 sec

AND: track Anding
AND 1 XR Used = Yes
AND 2 Used = No
AND 3 Used = No
AND 4 Used = No
AND 5 Used = No
AND 6 Used = No
AND 7 Used = No
AND 8 Used = No

AND: AND 1 XR
AND 1 XR Track 1 = Prime
AND 1 Enable Used = Yes
And 1 Enable Pickup = 0 sec
AND 1 Enable Drop = 0 sec
AND 1 Wrap Used = No

ADVANCED: MS restart
MS/GCP Restart Used = No

ADVANCED: out of service
OOS Control = OOS IPs

ADVANCED: out of service 2
T1 OOS Control = OOS Input 1
T1 OOS Controls = GCP and Islsnd

ADVANCED: track wrap circuits
Wrap LOS Timer = 5 sec
Track 1 Wrap Used = No

ADVANCED: trk 1 overrides
Track 1 : AllPredictors Override Used = No

ADVANCED: OR logic
OR 1 Used = No
OR 2 Used = No
OR 3 Used = No
OR 4 Used = No

ADVANCED: InternalI/O 1
Pass Thrus = No
Int.1 Sets = Not Used
Int.1 Set by = Not Used
Int.2 Sets = Not Used
Int.2 Set by = Not Used
Int.3 Sets = Not Used
Int.3 Set by = Not Used
Int.4 Sets = Not Used
Int.4 Set by = Not Used

ADVANCED: InternalI/O 2
Int.5 Sets = Not Used
Int.5 Set by = Not Used
Int.6 Sets = Not Used
Int.6 Set by = Not Used
Int.7 Sets = Not Used
Int.7 Set by = Not Used
Int.8 Sets = Not Used
Int.8 Set by = Not Used

ADVANCED: site options
Daylight Savings = On
Units = Standard
Ext Maint CallInput = No
Emergency Activate IP = No
EZ/EX Logging = Change
EZ/EX Point Change = 3

SSCC
Gates Used = Yes
SSCCi+2 GPs Coupled = Yes
Min Activation = 20 sec
Rmt Activation Cancel = 3 min
BellOn Gate Rising = No
Mute BellOn Gate Down = No
SSCCIV Controller Used = No

SSCC: 1
SSCC-1 Activation = AND 1 XR
SSCC-1 Gate Delay = 3 sec
SSCC-1 Number of GPs = 1
SSCC-1 Number of GDs = 1
SSCC 1 : Flash Rate = 60
SSCC 1 : Low Battery Detection = No
SSCC 1 : Flash Sync = master
SSCC 1 : Invert Gate Output = No
SSCC 1 : Lamp NeutralTest = Off
Aux-1 Xng CtrlUsed = No

SSCC: 2
SSCC-2 Activation = AND 1 XR
SSCC-2 Gate Delay = 3 sec
SSCC-2 Number of GPs = 0
SSCC-2 Number of GDs = 1
SSCC 2 : Flash Rate = 60
SSCC 2 : Low Battery Detection = No
SSCC 2 : Flash Sync = slave
SSCC 2 : Invert Gate Output = No
SSCC 2 : Lamp NeutralTest = Off
Aux-2 Xng CtrlUsed = No

OUTPUT: assignment page 1
OUT 1.1 = Not Used
OUT 1.2 = Not Used

INPUT: assignment page 1
IN 1.1 = T1 Prime UAX
IN 1.2 = Not Used

IO: assignment SSCC
OUT GC 1 = Gate Output 1
OUT GC 2 = Gate Output 2
IN 7.1 = AND 1 XR Enable
IN 7.2 = Not Used
IN 7.3 = Not Used
IN 7.4 = GD 1.1
IN 7.5 = GP 1.1
IN 8.1 = Out Of Service IP 1
IN 8.2 = Not Used
IN 8.3 = Not Used
IN 8.4 = GD 2.1
IN 8.5 = Not Used

SEAR
SEAR Subnode = 99
DI 1 = General1
DI 2 = Gnd Flt Tester 1
Rly 1 = Ground Fault Test
Rly 2 = Not Used

SEAR: Inputs
SP 2.1 = Not Used
SP 3.1 = Not Used
SP 4.1 = Not Used
SP 5.1 = Not Used
SP 6.1 = Not Used

SEAR: slot 1-4 inputs
IN 1.2 = Not Used
IN 2.1 = Not Used
IN 2.2 = Not Used
IN 3.1 = Not Used
IN 3.2 = Not Used
IN 4.1 = Not Used
IN 4.2 = Not Used

SEAR: inputs slot 5
IN 5.1 = Not Used
IN 5.2 = Not Used

SEAR: Inputs slot 6
IN 6.1 = Not Used
IN 6.2 = Not Used

SEAR: slot 7-8 inputs
IN 7.2 = Not Used
IN 7.3 = Not Used
IN 8.2 = Not Used
IN 8.3 = Not Used
IN 8.5 = General2

SITE: programming
Radio Subnode = 1
Password Access = Off
Low Battery Enabled = Off

Configuration Package File
---

Filename: 309474U.pac

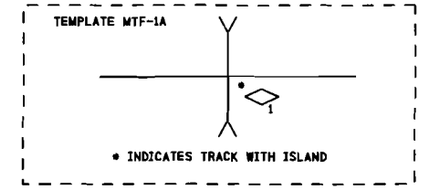


NOTES:

1) DISTANCE(S) TO BE VERIFIED AT INSTALLATION.
INDICATE SELECTED PROGRAMMED VALUE IF DIFFERENT THAN SHOWN.
REFER TO 4000 GCP INSTRUCTION/INSTALLATION MANUAL
FOR PROGRAMMING PARAMETERS.

2) PROGRAM TEXT HIGHLITED IN RED INDICATES 4000 PROGRAM
MODIFICATIONS TO DEFAULT PROGRAM VALUES.

3) EACH CONSTANT WARNING DEVICE SYSTEM TO BE PROGRAMMED TO
CONVERT TO A MOTION SENSOR 300 FEET FROM EDGE OF ROAD
TRAVELLED WAY.
SHUNT TRACK 300 FEET FROM EDGE OF ROAD TRAVELLED WAY
AND NOTE "EZ" VALUE.
PROGRAM EACH SYSTEM WITH THE INDICATED "EZ" VALUE +2.

4) VERIFY SET TIMER VALUE TO MATCH ACTUAL TRAIN MOVEMENT
WITHIN THE CROSSING APPROACH CIRCUITS.

PROPOSED
DES. No. _____
RED-IN YELLOW-OUT
AS INSTALLED
DATE _____
BY _____

6' X 6' BUNGALOW

| PROPOSED D | M | Y | REVISIONS | D | C | COMPLETED D | M | Y | C |
|---|---|---|---|---|---|---|---|---|---|
| | | | | | | | | | |

DIVISION MIDWEST
SUB. ST. LOUIS
SD. 1021 C
MP. 37.60 TO 38.00

SIGNALS AND COMMUNICATIONS EDMONTON, ALBERTA
27 FEBRUARY 2008
DES. PEA
CH. RLC

GCP 4000
PROGRAM INFORMATION
FINGER HILL ROAD
MARISSA, IL

M 03760C013

SAFETRAN SYSTEM CORP.
LOUISVILLE DIVISION, LOUISVILLE, KY

SAFETRAN SYSTEMS CORPORATION

| | | | |
|---|---|---|---|
| DES.: PEA | DATE: 02/27/08 | JOB NO.: PICAI0146B | |
| CKD.: RLC | ISSUE DATE: N/A | EST. NO.: N/A | |
| DRN.: PEA | PLAN NO.: N/A | SHEET N/A OF N/A | |
| P TIME: 14:19 | P DATE: 19-MAR-2008 | CAD ID.: 03760C013 | |

$FILENAME
$DATE

$WATERMARK

| NO. | DATE | BY | DESCRIPTION | APP. BY |
|---|---|---|---|---|
| 1 | | | | |
| 2 | | | | |
| 3 | | | | |
| 4 | | | | |
| 5 | | | | |

REVISIONS

TO CONFIGURE SEARII & SEARIII PRESS SITE SETUP KEY. USE ARROW KEYS TO MAKE SELECTION, PRESS ENTER AFTER SELECTION HAS BEEN MADE.

STAGE 1

| PROGRAM MENU QUESTIONS | PROGRAM | OPTIONS/RANGE |
|---|---|---|
| DATE/TIME? | CURRENT DATE/TIME | CURRENT DATE/TIME |
| AUTOMATIC DST ADJUSTMENT? | YES | YES, NO |
| TIME ZONE? | EASTERN | EASTERN, CENTRAL, MOUNTAIN, PACIFIC, ALASKA, HAWAII, ATLANTIC, SASKATCHEWAN, NEW FOUNLAND |
| SITE NAME? | FINGER HILL ROAD | STREET NAME |
| MILE POST? | 37.81 | MILEAGE |
| DOT/CROSSING IS #? | 309474U | DOT/CROSSING # |
| TESTER TYPE? | CROSSING | CROSSING, WAYSIDE |
| DATE FORMAT? | dd-mm-yyyy | mm-dd-yyyy, dd-mm-yyyy |
| TEMPERATURE FORMAT? | FAHRENHEIT | FAHRENHEIT, CELSIUS |
| SITE TYPE? | NO COM | NO COM, BULLHORN, DIALUP, NODE, COLLECTOR |
| SITE ATCS ADDRESS? | 7.620.100.100.99.01 | 7.RRR.LLL.GGG.99.01 |
| OFFICE ATCS ADDRESS? | | 2.RRR.NN.DDDD |
| PRIMARY HOP ADDR? | | 7.RRR.LLL.GGG.00.01 |
| BACKUP HOP ADDR1? | | 7.RRR.LLL.GGG.00.01 |
| BACKUP HOP ADDR2? | | 7.RRR.LLL.GGG.00.01 |
| POLL ID? | | 1-99 |
| MODE? | | GEN/ATCS, GENISYS |
| WAMS/XID? | | ENABLED, DISABLE |
| OFFICE COMM. DEVICE? | | DIRECT (RS232)<br>MCM (RS232)<br>MCM (ECHELON)<br>SREAD SPEC (ECHELON)<br>DIAL MODEM (RS232)<br>S200 RADIO (RS422) |
| OFFICE PHONE NUMBER? | | PHONE NUMBER OF WAMS |
| INIT STRING? | | OPTIONAL HAYES MODEM INITIALIZATION STRING |
| FIELD COMM. DEVICE? | | VHF COMM. (ECHELON)<br>VHF COMM. (RS232)<br>SPREAD SPEC (ECHELON)<br>SPREAD SPEC (RS232) |
| USER PORT? | 57600, B, N, 1, N | BAUD, DATA BITS, PARITY, STOP BITS, FLOW CONTROL |
| AUX PORT? | 9600, 8, N, 1, N | BAUD, DATA BITS, PARITY, STOP BITS, FLOW CONTROL |

(FOR NODE USE)

(FOR COLLECTOR USE)

YOU WILL NOW SEE A MESSAGE "PLEASE WAIT COMPILING STAGE 1"
CONTINUE TO NEXT PROGRAM MENU QUESTIONS.

STAGE 2

| QUESTION | PROGRAM | SELECTION 1 (MINIMUM) | SELECTION 2 (MAXIMUM) | CONDITION FOR MENU DISPLAY |
|---|---|---|---|---|
| RESET NAMES / MODULES ? | NO | YES | NO | ALWAYS |
| RAILROAD NUMBER ? | 360 (IC) | 1 | 999 | ALWAYS |
| CROSSING CONFIGURATION | NORMAL | NORMAL | SPLIT GATE (NOTE 1) | ALWAYS |
| ENTRANCE GATES ? | 0 (NOTE 2) | 0 | 8 | ALWAYS |
| GATE POSTION FAIL TIME (SECONDS) ? | N/A | 10 | 60 | GATES > 0 |
| BATTERY BANKS ? | 2 | 1 | 3 | ALWAYS |
| BATT MON USED ? | NO | NO | YES | ALWAYS |
| INTERNAL CROSSING CONTROLLERS ? | 2 | 0 | 2 | ALWAYS |
| EXTERNAL CROSSING CONTROLLERS ? | 0 | 0 | 2 | CROSSING CONTROLLER = YES |
| VHF COMMUNICATOR ? | YES | YES | NO | ALWAYS |
| DTMF ACTIVATION? | NO | NO | YES | RAILROAD = 360 (IC) |
| ACTIVATION CODE ? | N/A | 1 | 999 | VHF COMMUNICATOR = YES |
| ACTIVATION TIMEOUT ? | N/A | 1 | 600 | VHF COMMUNICATOR = YES |
| ILOD MODULES ? | 2 | 0 | 4 | ALWAYS |
| ANY LED BULBS USED ? | YES | NO | YES | ILOD MODULES > 0 |
| AUTO INSPECTION ? | NO | YES | NO | ALWAYS |
| BELL SENSORS ? | 0 | 0 | 8 | ALWAYS |
| BELL SENSORS TSS1 ? | N/A | NO | YES | BELL SENSORS > 0 |
| BELL SENSORS TSS2 ? | N/A | NO | YES | BELL SENSORS > 0 |
| BELL SENSORS TSS3 ? | N/A | NO | YES | BELL SENSORS > 0 |
| BELL SENSORS TSS4 ? | N/A | NO | YES | BELL SENSORS > 0 |
| BELL SENSORS TSS5 ? | N/A | NO | YES | BELL SENSORS > 0 |
| BELL SENSORS TSS6 ? | N/A | NO | YES | BELL SENSORS > 0 |
| BELL SENSORS TSS7 ? | N/A | NO | YES | BELL SENSORS > 0 |
| BELL SENSORS TSS8 ? | N/A | NO | YES | BELL SENSORS > 0 |
| BELL ON ? | N/A | GATES LOWERING | GATES MOVING | BELL SENSORS > 0 |
| GFT'S ? | YES | YES | NO | ALWAYS |
| BATTERIES ON GFT1 ? | 2 | 1 | 2 | GFT'S = YES |
| GATE TIP SENSORS ? | N/A | YES | NO | GATES > 0 |
| RTU ? | NO | NO | YES | ALWAYS |
| VHF VOICE CHANNEL ? | 1 | 1 | 8 | VHF COMMUNICATOR = YES (VERIFY CHANNEL) |
| VHF DATA CHANNEL ? | 1 | 1 | 8 | VHF COMMUNICATOR = YES (VERIFY CHANNEL) |
| USE CELL MODEM NON-CRITICAL FEATURE ? | NO | NO | YES | ALWAYS |
| FULL APPROACH MOVE ALARMS ? | ACTIVATE | ACTIVATE | DO NOT ACTIVATE | ALWAYS |

YOU WILL NOW SEE A MESSAGE "PLEASE WAIT COMPILING STAGE 2"
CONTINUE TO NEXT PROGRAM MENU QUESTIONS.

STAGE 3

| PROGRAM MENU QUESTIONS | PROGRAM |
|---|---|
| EDIT DIGITAL INPUTS | NO |
| EDIT BATTERIES | NO |
| EDIT RELAYS | NO |
| EDIT TEST LEDS | NO |
| EDIT ILOD SENSORS | NO |
| EDIT VHF SETTINGS | NO |
| GCP4K ATCS SUBNODE? | 16 |

SAVE CONFIGURATION

NOTES:

1) ADDITIONAL OPTIONS: DUAL CROSSING, EXTERNAL ENTRANCE GATE CONTROLLERS.
2) SELECT "0" IF NO GATE TIP AND BELL SENSORS ARE USED. THUS GATE AND BELL SENSOR RELATED STEPS WILL NOT BE AVAILABLE, OVERWISE ERRORS IN SEARS RECORDING WILL OCCUR.

$FILENAME
$DATE

SAFETRAN SYSTEMS CORPORATION

| | | | |
|---|---|---|---|
| DES.: PEA | DATE: 02/27/08 | JOB NO.: PICA10146B | |
| CKD.: RLC | ISSUE DATE: N/A | EST. NO.: N/A | |
| DRN.: PEA | PLAN NO.: N/A | SHEET N/A OF N/A | |
| P TIME: 14:19 | P DATE: 19-MAR-2008 | CAD ID.: 03760C14 | |

PROPOSED
DES. No. _____
RED-IN YELLOW-OUT
AS INSTALLED
DATE _____
BY _____

SEARIII EXECUTIVE 9V725 REV. A01U, SEARIII APPLICATION 9V864 REV. A01J

| PROPOSED D | PROPOSED M | PROPOSED Y | REVISIONS | D | C | COMPLETED D | COMPLETED M | COMPLETED Y | C |
|---|---|---|---|---|---|---|---|---|---|
| | | | | | | | | | |

DIVISION MIDWEST
SUB. ST. LOUIS
SD. 1021 C
MP. 37.60 TO 38.00

SIGNALS AND COMMUNICATIONS
EDMONTON, ALBERTA

DES. PEA
CH. RLC

27 FEBRUARY 2008

GCP 4000/SEARIII
SETUP AND PROGRAM
FINGER HILL ROAD
MARISSA, IL

M 03760C14

SAFETRAN SYSTEM CORP.
LOUISVILLE DIVISION, LOUISVILLE, KY

$WATERMARK

$FILENAME
$DATE

| REVISIONS | | | | |
|---|---|---|---|---|
| NO. | DATE | BY | DESCRIPTION | APP. BY |
| 1 | | | | |
| 2 | | | | |
| 3 | | | | |
| 4 | | | | |
| 5 | | | | |

## CALIBRATION HISTORY

INITIAL SET UP BY: _____ DATE: _____

| DC VOLTAGE READINGS AFTER CALIBRATION | | | | CALIBRATION HISTORY | | | | | | | | | | LINEARIZATION HISTORY (NOTE 1) | | | | | | | |
|---|---|---|---|---|---|---|---|---|---|---|---|---|---|---|---|---|---|---|---|---|---|
| | | | | EZ/EX VALUES (TRACK UNOCCUPIED) | | | | HARD WIRE SHUNT AT TERMINATION SHUNT | | | | | | HARD WIRE SHUNT AT 50 PERCENT POINT OF SHUNT | | | | | | | |
| | | | | EZ | | EX | | EZ | | EX | | 50 PERCENT OF EZ VALUE | | NO LINEARIZATION | | | | LINEARIZATION COMPLETE | | | |
| | | | | | | | | | | | | | | EZ | | EX | | STEP± | | EZ | |
| | | | | NRML | STBY | NRML | STBY | NRML | STBY | NRML | STBY | NRML | STBY | NRML | STBY | NRML | STBY | NRML | STBY | NRML | STBY |
| T1 | Z1= | NORTH | TRACK 1 | | | | | | | | | | | | | | | | | | |
| | Z2= | SOUTH | TRACK 1 | | | | | | | | | | | | | | | | | | |

## CALIBRATION HISTORY

INITIAL SET UP BY: _____ DATE: _____

| DC VOLTAGE READINGS AFTER CALIBRATION | | | | CALIBRATION HISTORY | | | | | | | | | | LINEARIZATION HISTORY (NOTE 1) | | | | | | | |
|---|---|---|---|---|---|---|---|---|---|---|---|---|---|---|---|---|---|---|---|---|---|
| | | | | EZ/EX VALUES (TRACK UNOCCUPIED) | | | | HARD WIRE SHUNT AT TERMINATION SHUNT | | | | | | HARD WIRE SHUNT AT 50 PERCENT POINT OF SHUNT | | | | | | | |
| | | | | EZ | | EX | | EZ | | EX | | 50 PERCENT OF EZ VALUE | | NO LINEARIZATION | | | | LINEARIZATION COMPLETE | | | |
| | | | | | | | | | | | | | | EZ | | EX | | STEP± | | EZ | |
| | | | | NRML | STBY | NRML | STBY | NRML | STBY | NRML | STBY | NRML | STBY | NRML | STBY | NRML | STBY | NRML | STBY | NRML | STBY |
| T1 | Z1= | NORTH | TRACK 1 | | | | | | | | | | | | | | | | | | |
| | Z2= | SOUTH | TRACK 1 | | | | | | | | | | | | | | | | | | |

## CALIBRATION HISTORY

INITIAL SET UP BY: _____ DATE: _____

| DC VOLTAGE READINGS AFTER CALIBRATION | | | | CALIBRATION HISTORY | | | | | | | | | | LINEARIZATION HISTORY (NOTE 1) | | | | | | | |
|---|---|---|---|---|---|---|---|---|---|---|---|---|---|---|---|---|---|---|---|---|---|
| | | | | EZ/EX VALUES (TRACK UNOCCUPIED) | | | | HARD WIRE SHUNT AT TERMINATION SHUNT | | | | | | HARD WIRE SHUNT AT 50 PERCENT POINT OF SHUNT | | | | | | | |
| | | | | EZ | | EX | | EZ | | EX | | 50 PERCENT OF EZ VALUE | | NO LINEARIZATION | | | | LINEARIZATION COMPLETE | | | |
| | | | | | | | | | | | | | | EZ | | EX | | STEP± | | EZ | |
| | | | | NRML | STBY | NRML | STBY | NRML | STBY | NRML | STBY | NRML | STBY | NRML | STBY | NRML | STBY | NRML | STBY | NRML | STBY |
| T1 | Z1= | NORTH | TRACK 1 | | | | | | | | | | | | | | | | | | |
| | Z2= | SOUTH | TRACK 1 | | | | | | | | | | | | | | | | | | |

NOTE:

1) **SET UP APPROACH LENGTH AND LINEARIZATION CALIBRATION**
VERIFY THAT "ENHANCED DETECTION" MODE IS PROGRAMMED "OFF" BEFORE ATTEMPTING LINEARIZATION PROCEDURES.

PROPOSED
DES. No. _____
RED-IN YELLOW-OUT
AS INSTALLED
DATE _____
BY _____

6' X 6' BUNGALOW

| PROPOSED D | M | Y | REVISIONS | D | C | COMPLETED D | M | Y | C |
|---|---|---|---|---|---|---|---|---|---|
| | | | | | | | | | |

DIVISION MIDWEST
SUB. ST. LOUIS
SD. 1021 C
MP. 37.60 TO 38.00

SIGNALS AND COMMUNICATIONS
EDMONTON, ALBERTA

27 FEBRUARY 2008

DES. PEA
CH. RLC

GCP 4000
CALIBRATION HISTORY
FINGER HILL ROAD
MARISSA, IL

M 03760C015

SAFETRAN SYSTEM CORP.
LOUISVILLE DIVISION, LOUISVILLE, KY

| SAFETRAN SYSTEMS CORPORATION | | | |
|---|---|---|---|
| DES. : PEA | DATE: 02/27/08 | JOB NO. : PICA10146B | |
| CKD. : RLC | ISSUE DATE: N/A | EST. NO. :N/A | |
| DRN. : PEA | PLAN NO. :N/A | SHEET N/A OF N/A | |
| P. TIME:14:19 | P. DATE:19-MAR-2008 | CAD ID. : 03760C015 | |

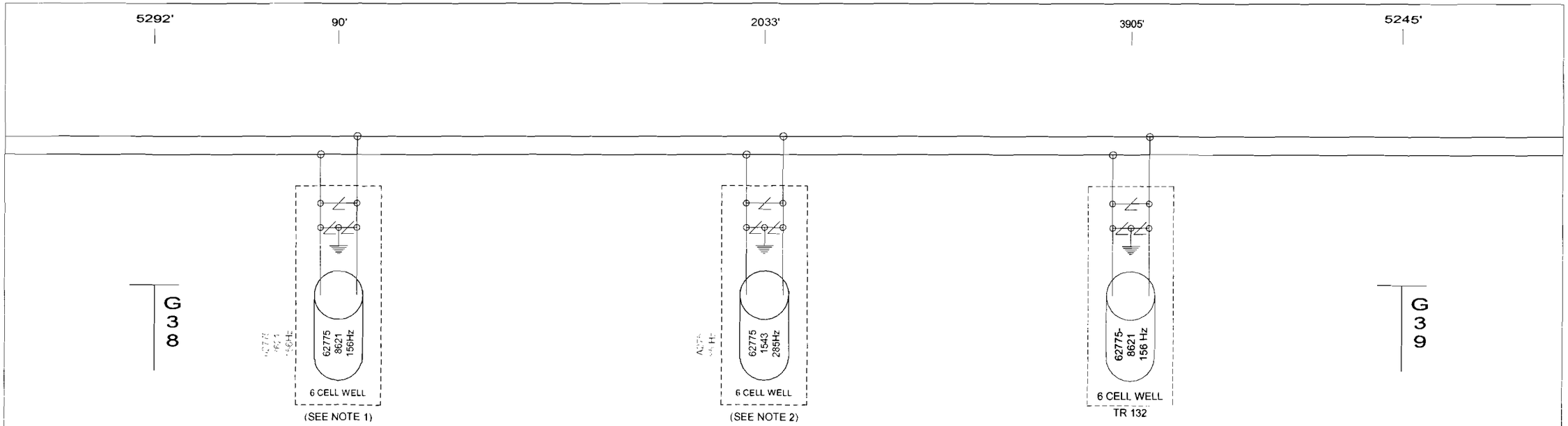


NOTES:

1) MULTI-FREQ. NARROW BAND SHUNT 62775-8621.

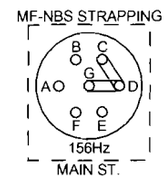


2) MULTI-FREQ. NARROW BAND SHUNT 62775-1543.

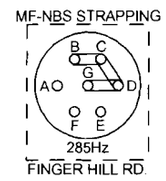


PROPOSED
DES. No. _____
RED-IN BLUE-OUT

AS INSTALLED
DATE _____
BY _____

| | |
|---|---|
| REGION MIDWEST | Illinois Central — COMMUNICATIONS & SIGNALS, ENGINEERING DEPARTMENT |
| DISTRICT ST. LOUIS | SD 1021 C MP 38.0 TO 39.0 |
| FILENAME 03800C01 | MARISSA, IL |
| DESIGNER CBV / DATE 5-22-97 | CROSSING STARTS |
| SHEET NO. 1 OF 1 | |

5 4 3 2 1 REVISIONS