RECEIVED
APR 7 2008
Illinois Commerce Commission
RAIL SAFETY SECTION

# ELGIN, JOLIET & EASTERN RAILWAY COMPANY
# HIGHWAY CROSSING WARNING SYSTEM

## HAWTHORNE LANE
## WEST CHICAGO, ILLINOIS

DOT 260538K
EJ&E MP 30.20 WSD

This drawing was created using CADD. All field and office changes are to be routed through Main Office in East Joliet. DO NOT make changes to this original copy without notifying the Engineer-Signals, Communications & Electrical

| NO | DESCRIPTION | BY | CHK'D | DATE |
|---|---|---|---|---|
| 8 | | | | |
| 7 | | | | |
| 6 | | | | |
| 5 | | | | |
| 4 | | | | |
| 3 | | | | |
| 2 | | | | |
| 1 | | | | |
| | AS IN SERVICE | TWH | TWH | 4/08 |

REVISIONS

**ELGIN, JOLIET & EASTERN RAILWAY COMPANY**

HIGHWAY CROSSING WARNING SYSTEM
HAWTHORNE LANE
WEST CHICAGO, ILLINOIS

ENGINEERING SERVICES
JOLIET, IL 60432
SCALE NONE

CHECKED BY TWH
IN CHARGE OF TWH

DRAWN BY TWH
DATE 3/1/07
CAD ID 260538K-COV.DWG

FILE NO. 260538K | SHEET NO. COVER | CONT'D ON 0

| DESCRIPTION | SHEET NO. | DWG. NO. |
|---|---|---|
| COVER | COVER | 260538K-COV |
| INDEX | 0 | 260538K-000 |
| CROSSING DETAIL & APPROACH CALCULATIONS | 1 | 260538K-001 |
| HXP WIRING- MAIN | 2 | 260538K-002 |
| HXP SETUP SHEET - MAIN | 2A | 260538K-002A |
| XHP WIRING - SIDING | 3 | 260538K-003 |
| HXP SETUP SHEET - SIDING | 3A | 260538K-003A |
| PSO WIRING | 4 | 260538K-004 |
| GATE & LAMP CONTROL WIRING | 5 | 260538K-005 |
| CABLE & ARRESTOR PANEL WIRING | 6 | 260538K-006 |
| CROSSING GATE WIRING | 7 | 260538K-007 |
| BATTERY BUS & RECTIFIER WIRING | 8 | 260538K-008 |
| HCA & LOD WIRING | 9 | 260538K-009 |
| RTU WIRING | 9A | 260538K-009A |
| HOUSE LAYOUT | 10 | 260538K-010 |
| EQUIPMENT RACK LAYOUT | 11 | 260538K-011 |
| TERMINAL BOARD DETAIL | 11A | 260538K-011A |
| AC POWER DISTRIBUTION | 12 | 260538K-012 |
| WALL"C" LAYOUT DETAIL | 13 | 260538K-013 |
| GEO - MAIN | 14 | 260538K-014 |
| GEO - SIDING | 15 | 260538K-015 |
| XO1 CIRCUITS | 16 | 260538K-016 |
| 2279WP CIRCUITS | 17 | 260538K-017 |
| UP INTERCONNECT CIRCUITS | 18 | 260538K-018 |


This drawing was created using CADD. All field and office changes are to be routed through Main Office in East Joliet. DO NOT make changes to this original copy without notifying the Engineer-Signals, Communications & Electrical

| NO | DESCRIPTION | BY | CHK'D | DATE |
|---|---|---|---|---|
| 8 | | | | |
| 7 | | | | |
| 6 | | | | |
| 5 | | | | |
| 4 | | | | |
| 3 | | | | |
| 2 | | | | |
| 1 | | | | |
| | AS IN SERVICE | TWH | TWH | 4/08 |

REVISIONS

**ELGIN, JOLIET & EASTERN RAILWAY COMPANY**

SIGNAL PRINT INDEX
HAWTHORNE LANE
WEST CHICAGO, ILLINOIS

ENGINEERING SERVICES
JOLIET, IL 60432
SCALE NONE

CHECKED BY TWH
IN CHARGE OF TWH

DRAWN BY TWH
DATE 3/1/07
CAD ID 260538K-000.DWG

FILE NO. 260538K | SHEET NO. 0 | CONT'D ON 1

## HOUSE CABLE ASSIGNMENTS

| DEVICE | CABLE(S) |
|---|---|
| GATE A | 2–7C #6 |
| FLASHER A1 | 7C #6 |
| 1T1–1, 1T2–1, 1R1–1, 1R2–1 | 2C #6TW |
| 1T1–2, 1T2–2, 1R1–2, 1R2–2 | 2C #6TW |
| 2T1–1, 2T2–1, 2R1–1. 2R2–1 | 2C #6TW |
| 2T1–2, 2T2–2, 2R1–2, 2R2–2 | 2C #6TW |
| AC POWER | 3C #2 |
| XO 1 | 12C # 14 |
| 2279 WP | 12C # 14 |
| UP INTERCONNECT | 12C # 14 |

## GUIDELINES FOR CROSSING WARNING TIME AND APPROACH DISTANCE CALCULATIONS

| | |
|---|---|
| MAX SPEED IN MPH | 45 |
| CT IN SECONDS | 0 |
| BUFFER TIME IN SECONDS | 5 |
| TOTAL WARNING TIME IN SECONDS | 25 |
| ERT IN SECONDS | 8 |
| APT IN SECONDS | 0 |
| TOTAL APPROACH TIME IN SECONDS | 40 |
| APPROACH DISTANCE IN FEET | 3195 |
| SPEED IN FPS | 66 |
| **CLEARANCE TIME CALCULATION*** | |
| LONGEST DISTANCE IN FEET (35 FEET MINIMUM) | 188 |
| CT IN SECONDS | 15 |

APT – ADVANCED PRE–EMPTION
ERT – EQUIPMENT RESPONSE TIME
CT – CLEARANCE TIME

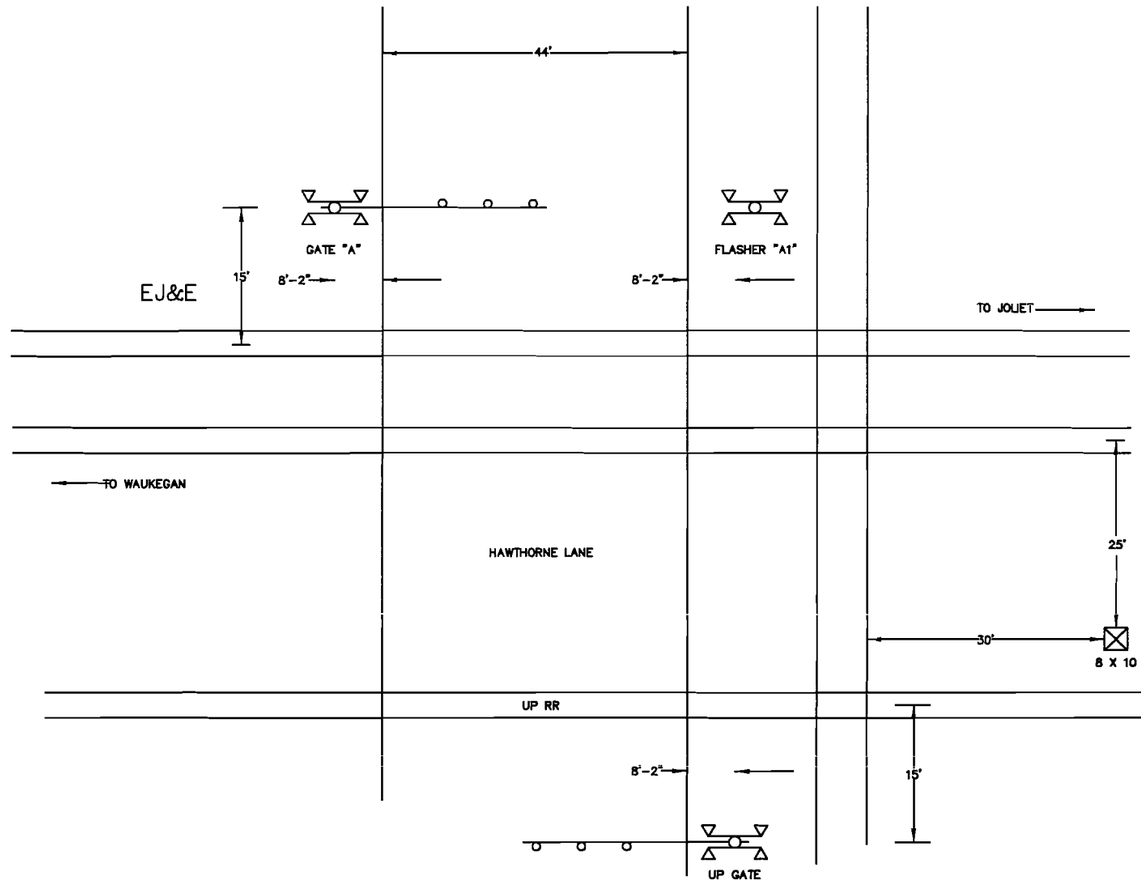


| DOT: 260538K | EJ&E MP 30.20 | |
|---|---|---|
| EQUIPMENT | QUADRANT | |
| | NW | SE |
| FLS | – | X |
| GATE (US&S MODEL 95) | X | – |
| GATE (FT') | 26 | – |
| CANTILEVER (FT') | – | – |
| ADDITIONAL LIGHTS | – | – |
| BELL | X | X |
| X BUCKS | X | X |
| MULTIPLE TRACK SIGNS | X | X |

THE J

This drawing was created using CADD. All field and office changes are to be routed through Main Office in East Joliet. DO NOT make changes to this original copy without notifying the Engineer–Signals, Communications & Electrical.

| NO | DESCRIPTION | BY | CHK'D | DATE |
|---|---|---|---|---|
| 8 | | | | |
| 7 | | | | |
| 6 | | | | |
| 5 | | | | |
| 4 | | | | |
| 3 | | | | |
| 2 | | | | |
| 1 | | | | |
| | AS IN SERVICE | TWH | TWH | 4/08 |

REVISIONS

**ELGIN, JOLIET & EASTERN RAILWAY COMPANY**

CROSSING DETAIL & APPROACH TABLES
HAWTHORNE LANE
WEST CHICAGO, ILLINOIS

ENGINEERING SERVICES
JOLIET, IL 60432
SCALE NONE

CHECKED BY TWH
IN CHARGE OF TWH

DRAWN BY TWH
DATE 3/1/07
CAD ID 260538K–001.DWG

FILE NO. 260538K | SHEET NO. 1 | CONT'D ON 2

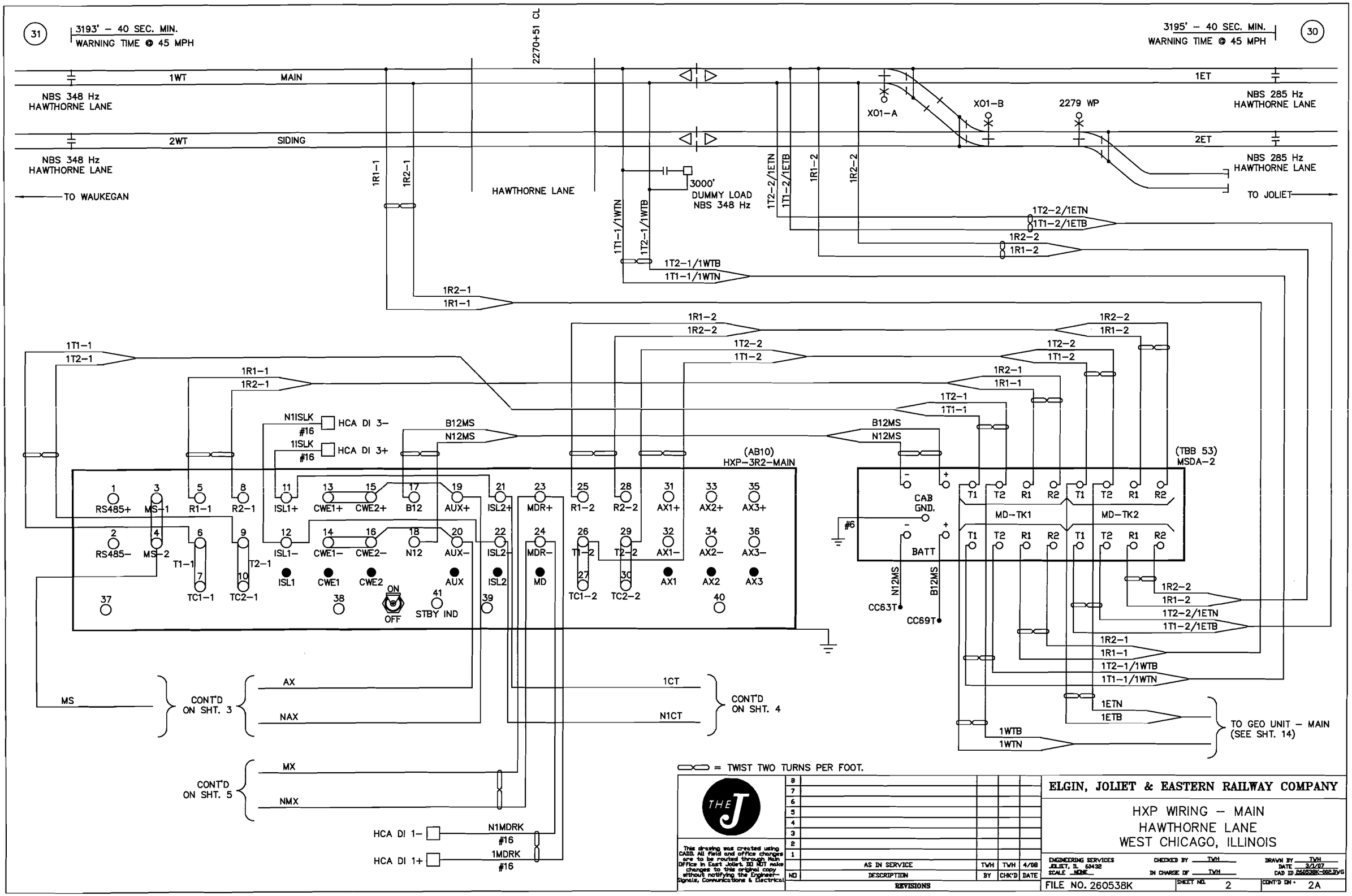


This drawing was created using CADD. All field and office changes are to be routed through Main Office in East Joliet. DO NOT make changes to this original copy without notifying the Engineer–Signals, Communications & Electrical

| NO | DESCRIPTION | BY | CHK'D | DATE |
|---|---|---|---|---|
| 8 | | | | |
| 7 | | | | |
| 6 | | | | |
| 5 | | | | |
| 4 | | | | |
| 3 | | | | |
| 2 | | | | |
| 1 | | | | |
| | AS IN SERVICE | TVH | TVH | 4/08 |

REVISIONS

**ELGIN, JOLIET & EASTERN RAILWAY COMPANY**

HXP WIRING – MAIN
HAWTHORNE LANE
WEST CHICAGO, ILLINOIS

ENGINEERING SERVICES
JOLIET, IL 60432
SCALE NONE

CHECKED BY TVH
IN CHARGE OF TVH

DRAWN BY TVH
DATE 3/1/07
CAD ID 260538K-002.DWG

FILE NO. 260538K
SHEET NO. 2
CONT'D ON: 2A

*Grade Crossing Location Record*

Cabinet Number (Option 90) 7209

Location HAWTHORNE LN - MAIN Milepost 30.20 WSD DOT 260 538K Date 04 / 03 / 08

**Operating Program** HPN _____ Version 35.0

**System Monitor Program** HPN _____ Version 20.2

**Hardware Settings**

Track 1 Master ☒ Slave ☐ 4 kHz ☐ 8 kHz ☒
LOS jumper 0 ☐ 1 ☒ 2 ☐ Fault jumper 0 ☐ 1 ☒
Approach configuration switch position: Normal ☒ Short ☐ Very Short ☐

Track 2 Master ☐ Slave ☒ 4 kHz ☐ 8 kHz ☐
LOS jumper 0 ☐ 1 ☐ 2 ☐ Fault jumper 0 ☐ 1 ☐
Approach configuration switch position: Normal ☒ Short ☐ Very Short ☐

**Adjust Select Adjustments**

| No. | Adjustment | Default | Range | Track 1 | Track 2 |
|---|---|---|---|---|---|
| 1 | Approach Length | 9,999 | 0 - 9,999 | 3195 feet | 3195 feet |
| 2 | Warning Time | 99 | 23 - 99 | 40 seconds | 40 seconds |
| 3 | LIA | 0 | -9 to +9 | 0 steps | 0 steps |
| 4 | TC (1 step = 32) | 0 | 430 - 470 | 138 steps | 430 steps |
| 5 | MD Restart | 99% | 0 - 99% | 45 RX | 45 RX |

**Option Adjustments**

| No. | Adjustment | Default | Range | Track 1 | Track 2 |
|---|---|---|---|---|---|
| 1 | TK-ENA | UP | UP or dn | UP ☒ dn ☐ | UP ☒ dn ☐ |
| 2 | TK FO | 0 | 0 - 9999 | 348 STRAP Hz | 285 STRAP Hz |
| 3 | CW/MD | d | C to d | C ☒ d ☐ | C ☒ d ☐ |
| 4 | UNI-BI | b | U - b | U ☐ b ☒ | U ☐ b ☒ |
| 5 | NBS-C | 0 | 0 - 99 | 99 | 99 RX |
| | | 9,999 | RX dependant | 3227 | 3227 feet |
| 6 | CWEWT | 80 | 0 - 99 | 80 | 80 seconds |
| 7 | LOS | 16 | 4 - 99 | 16 | 16 seconds |
| 8 | IJ-LOS | 5 | 3 - 99 | 5 | 5 seconds |
| 9 | BC | frequency dependant | 50 -250 | 132 | 128 |
| 10 | P-COMP | 0 | 0 - 10 | 0 | 0 degrees |

*HXP-3, HXP-3R, HXP-3R2*

**AX Adjustment Options** NOTE: NO AX DRIVES ARE USED AT THIS LOCATION

| | Default | Range | Option 11 - AX1 | Option 12 - AX2 | Option 13 - AX3 |
|---|---|---|---|---|---|
| TK-ASN | | 1, 2, Both | 1 ☐ 2 ☐ Both ☐ | 1 ☐ 2 ☐ Both ☐ | 1 ☐ 2 ☐ Both ☐ |
| OF-TK1 | 0 | 0 - 9,999 | feet | feet | feet |
| OF-TK2 | 0 | 0 - 9,999 | feet | feet | feet |
| WT | 99 | 23 - 99 | seconds | seconds | seconds |
| MD-RST | 99 | 0 - 99% | RX | RX | RX |
| CW/MD | d | C or d | C ☐ d ☐ | C ☐ d ☐ | C ☐ d ☐ |
| CJ-LOS | 0 | 3 - 99 | seconds | seconds | seconds |
| PJ-DET | 15 | 4 - 15 | seconds | seconds | seconds |
| PJ-RX | 15 | 4 - 15 | RX | RX | RX |
| POS-ST | dn | UP or dn | UP ☐ dn ☐ | UP ☐ dn ☐ | UP ☐ dn ☐ |

| No. | Adjustment | Default | Range | Track 1 | Track 2 |
|---|---|---|---|---|---|
| 17 | MDR-AX | n* | n or A | n ☒ A ☐ | n ☒ A ☐ |
| | OF-TK1 | 0 | 0 - 9,999 | feet | |
| | OF-TK2 | 0 | 0 - 9,999 | | feet |
| | CJ-LOS | 0 | 3 - 99 | seconds | seconds |
| | PJ-DET | 15 | 4 - 15 | seconds | seconds |
| 18 | MD-TMR | 10 | 10-99 (0=disable) | 10 minutes | 10 minutes |
| 19 | MIN-WT | 0 | 23-99 (0=disable) | 0 seconds | 0 seconds |
| 20 | FS-DET | 0 | 10-30 (0=disable) | 10 minutes | 10 minutes |
| 21 | POS-RX | 0 | 0 - 74 (0=disable) | 0 RX | 0 RX |
| | POS-TM | 0 | 0 - 99** | 0 minutes | 0 minutes |
| 47 | ATO-RX | dn | UP or dn | UP ☐ dn ☒ | UP ☐ dn ☒ |
| 48 | PF-ENA | UP | UP or dn | UP ☒ dn ☐ | UP ☒ dn ☐ |

***n = not an AX drive (no options available)** ****0 = disable, 99 = continuous**

**Shunt Record**

| | | No Shunt | | 100% Shunt | | 50% Shunt | | | LIA Added |
|---|---|---|---|---|---|---|---|---|---|
| **West Approach** | | RX | Phase | RX | Phase | | RX | Phase | ±1 to 9 |
| Track 1 | Normal | 100 | 69 | | | | | | 0 |
| | Standby | | | | | | | | |
| Track 2 | Normal | 101 | 73 | | | | | | 0 |
| | Standby | | | | | | | | |
| **East Approach** | | | | | | | | | |
| Track 1 | Normal | | | | | | | | |
| | Standby | | | | | | | | |
| Track 2 | Normal | | | | | | | | |
| | Standby | | | | | | | | |

This drawing was created using CADD. All field and office changes are to be routed through Main Office in East Joliet. DO NOT make changes to this original copy without notifying the Engineer-Signals, Communications & Electrical

| NO | DESCRIPTION | BY | CHK'D | DATE |
|---|---|---|---|---|
| 8 | | | | |
| 7 | | | | |
| 6 | | | | |
| 5 | | | | |
| 4 | | | | |
| 3 | | | | |
| 2 | | | | |
| 1 | | | | |
| | AS IN SERVICE | TVH | TVH | 4/09 |

REVISIONS

**ELGIN, JOLIET & EASTERN RAILWAY COMPANY**

HXP SETUP SHEET – MAIN
HAWTHORNE LANE
WEST CHICAGO, ILLINOIS

ENGINEERING SERVICES
JOLIET, IL 60432
SCALE NONE

CHECKED BY TVH
IN CHARGE OF TVH

DRAWN BY TVH
DATE 3/1/07
CAD ID 260538K-00RAIVG

FILE NO. 260538K SHEET NO. 2A CONT'D ON 3

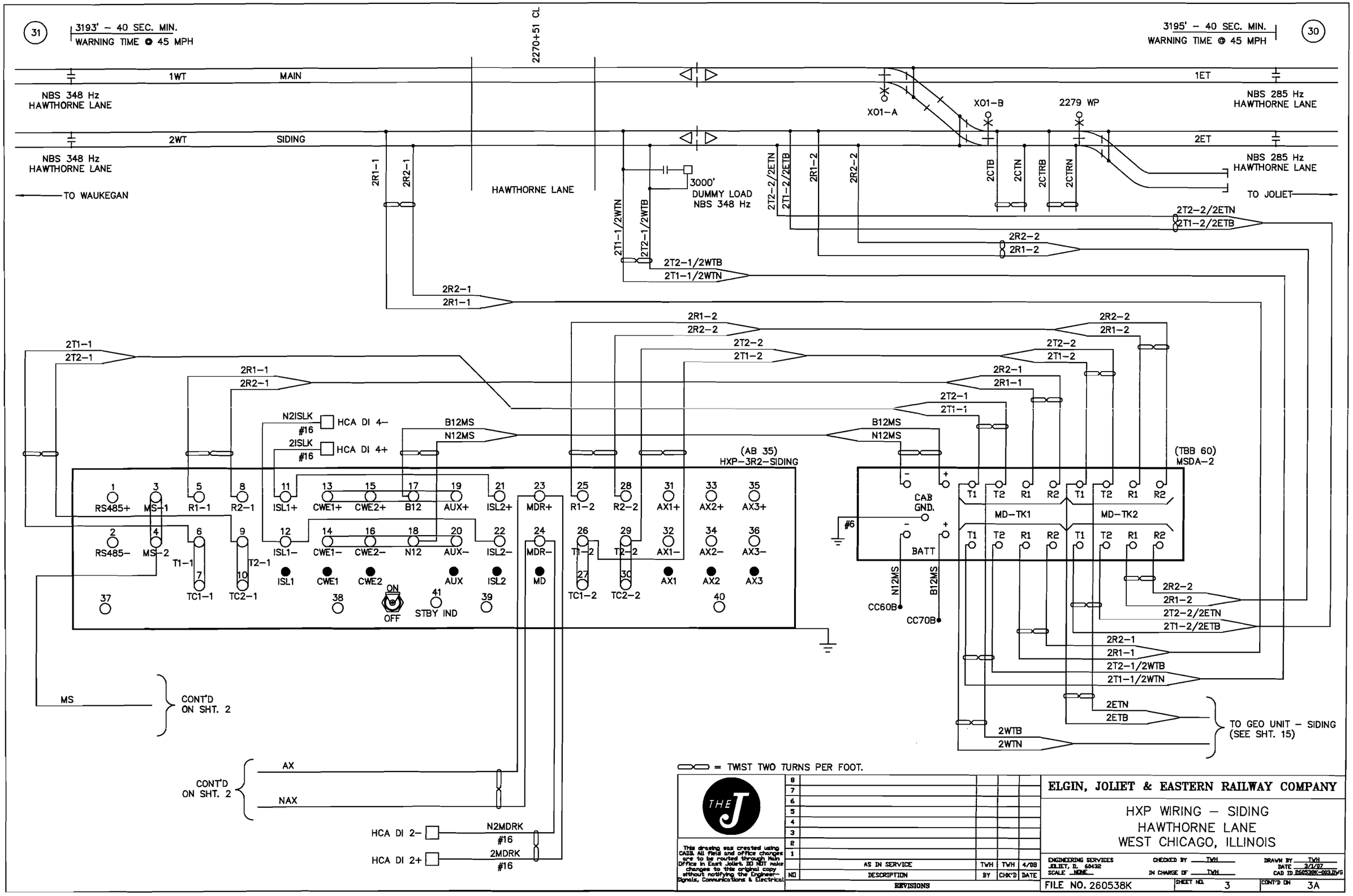


This drawing was created using CADD. All field and office changes are to be routed through Main Office in East Joliet. DO NOT make changes to this original copy without notifying the Engineer–Signals, Communications & Electrical.

| NO | DESCRIPTION | BY | CHK'D | DATE |
|---|---|---|---|---|
| | AS IN SERVICE | TWH | TWH | 4/08 |

REVISIONS

**ELGIN, JOLIET & EASTERN RAILWAY COMPANY**

HXP WIRING – SIDING
HAWTHORNE LANE
WEST CHICAGO, ILLINOIS

ENGINEERING SERVICES
JOLIET, IL 60432
SCALE NONE

CHECKED BY TWH
IN CHARGE OF TWH

DRAWN BY TWH
DATE 3/1/07
CAD ID 260538K-003.DWG

FILE NO. 260538K
SHEET NO. 3
CONT'D ON 3A

*Grade Crossing Location Record*

Cabinet Number (Option 90) 7276

Location HAWTHORNE LN - SIDING Milepost 30.20 WSD DOT 260 538K Date 04 / 03 / 08

**Operating Program** HPN _____ Version 35.0

**System Monitor Program** HPN _____ Version 20.2

**Hardware Settings**

Track 1 Master ☒ Slave ☐ 4 kHz ☐ 8 kHz ☒
LOS jumper 0 ☐ 1 ☒ 2 ☐ Fault jumper 0 ☐ 1 ☒
Approach configuration switch position: Normal ☒ Short ☐ Very Short ☐

Track 2 Master ☐ Slave ☒ 4 kHz ☐ 8 kHz ☐
LOS jumper 0 ☐ 1 ☐ 2 ☐ Fault jumper 0 ☐ 1 ☐
Approach configuration switch position: Normal ☒ Short ☐ Very Short ☐

**Adjust Select Adjustments**

| No. | Adjustment | Default | Range | Track 1 | Track 2 |
|---|---|---|---|---|---|
| 1 | Approach Length | 9,999 | 0 - 9,999 | 3195 feet | 3195 feet |
| 2 | Warning Time | 99 | 23 - 99 | 40 seconds | 40 seconds |
| 3 | LIA | 0 | -9 to +9 | 0 steps | 0 steps |
| 4 | TC (1 step = 32) | 0 | 430 - 470 | 430 steps | 395 steps |
| 5 | MD Restart | 99% | 0 - 99% | 45 RX | 45 RX |

**Option Adjustments**

| No. | Adjustment | Default | Range | Track 1 | Track 2 |
|---|---|---|---|---|---|
| 1 | TK-ENA | UP | UP or dn | UP ☒ dn ☐ | UP ☒ dn ☐ |
| 2 | TK FO | 0 | 0 - 9999 | 348 STRAP Hz | 285 STRAP Hz |
| 3 | CW/MD | d | C to d | C ☒ d ☐ | C ☒ d ☐ |
| 4 | UNI-BI | b | U - b | U ☐ b ☒ | U ☐ b ☒ |
| 5 | NBS-C | 0 | 0 - 99 | 99 | 99 RX |
| | | 9,999 | RX dependant | 3227 | 3227 feet |
| 6 | CWEWT | 80 | 0 - 99 | 80 | 80 seconds |
| 7 | LOS | 16 | 4 - 99 | 16 | 16 seconds |
| 8 | IJ-LOS | 5 | 3 - 99 | 5 | 5 seconds |
| 9 | BC | frequency dependant | 50 -250 | 132 | 128 |
| 10 | P-COMP | 0 | 0 - 10 | 0 | 0 degrees |

*HXP-3, HXP-3R, HXP-3R2*

**AX Adjustment Options** NOTE: NO AX DRIVES ARE USED AT THIS LOCATION

| | Default | Range | Option 11 - AX1 | Option 12 - AX2 | Option 13 - AX3 |
|---|---|---|---|---|---|
| TK-ASN | | 1, 2, Both | 1 ☐ 2 ☐ Both ☐ | 1 ☐ 2 ☐ Both ☐ | 1 ☐ 2 ☐ Both ☐ |
| OF-TK1 | 0 | 0 - 9,999 | feet | feet | feet |
| OF-TK2 | 0 | 0 - 9,999 | feet | feet | feet |
| WT | 99 | 23 - 99 | seconds | seconds | seconds |
| MD-RST | 99 | 0 - 99% | RX | RX | RX |
| CW/MD | d | C or d | C ☐ d ☐ | C ☐ d ☐ | C ☐ d ☐ |
| CJ-LOS | 0 | 3 - 99 | seconds | seconds | seconds |
| PJ-DET | 15 | 4 - 15 | seconds | seconds | seconds |
| PJ-RX | 15 | 4 - 15 | RX | RX | RX |
| POS-ST | dn | UP or dn | UP ☐ dn ☐ | UP ☐ dn ☐ | UP ☐ dn ☐ |

| No. | Adjustment | Default | Range | Track 1 | Track 2 |
|---|---|---|---|---|---|
| 17 | MDR-AX | n* | n or A | n ☒ A ☐ | n ☒ A ☐ |
| | OF-TK1 | 0 | 0 - 9,999 | feet | |
| | OF-TK2 | 0 | 0 - 9,999 | | feet |
| | CJ-LOS | 0 | 3 - 99 | seconds | seconds |
| | PJ-DET | 15 | 4 - 15 | seconds | seconds |
| 18 | MD-TMR | 10 | 10-99 (0=disable) | 10 minutes | 10 minutes |
| 19 | MIN-WT | 0 | 23-99 (0=disable) | 0 seconds | 0 seconds |
| 20 | FS-DET | 0 | 10-30 (0=disable) | 0 minutes | 10 minutes |
| 21 | POS-RX | 0 | 0 - 74 (0=disable) | 0 RX | 0 RX |
| | POS-TM | 0 | 0 - 99** | 0 minutes | 0 minutes |
| 47 | ATO-RX | dn | UP or dn | UP ☐ dn ☒ | UP ☐ dn ☒ |
| 48 | PF-ENA | UP | UP or dn | UP ☒ dn ☐ | UP ☒ dn ☐ |

***n = not an AX drive (no options available)** ****0 = disable, 99 = continuous**

**Shunt Record**

| West Approach | | No Shunt RX | No Shunt Phase | 100% Shunt RX | 100% Shunt Phase | 50% Shunt | 50% Shunt RX | 50% Shunt Phase | LIA Added ±1 to 9 |
|---|---|---|---|---|---|---|---|---|---|
| Track 1 | Normal | 101 | 68 | | | | | | 0 |
| | Standby | | | | | | | | |
| Track 2 | Normal | 101 | 73 | | | | | | 0 |
| | Standby | | | | | | | | |
| **East Approach** | | | | | | | | | |
| Track 1 | Normal | | | | | | | | |
| | Standby | | | | | | | | |
| Track 2 | Normal | | | | | | | | |
| | Standby | | | | | | | | |

This drawing was created using CADD. All field and office changes are to be routed through Main Office in East Joliet. DO NOT make changes to this original copy without notifying the Engineer-Signals, Communications & Electrical

| NO | DESCRIPTION | BY | CHK'D | DATE |
|---|---|---|---|---|
| 8 | | | | |
| 7 | | | | |
| 6 | | | | |
| 5 | | | | |
| 4 | | | | |
| 3 | | | | |
| 2 | | | | |
| 1 | | | | |
| | AS IN SERVICE | TWH | TWH | 4/08 |

REVISIONS

**ELGIN, JOLIET & EASTERN RAILWAY COMPANY**

HXP SETUP SHEET – SIDING
HAWTHORNE LANE
WEST CHICAGO, ILLINOIS

ENGINEERING SERVICES
JOLIET, IL 60432
SCALE NONE

CHECKED BY TWH
IN CHARGE OF TWH

DRAWN BY TWH
DATE 3/1/07
CAD ID 260538K-003A.DWG

FILE NO. 260538K SHEET NO. 3A CONT'D ON 4

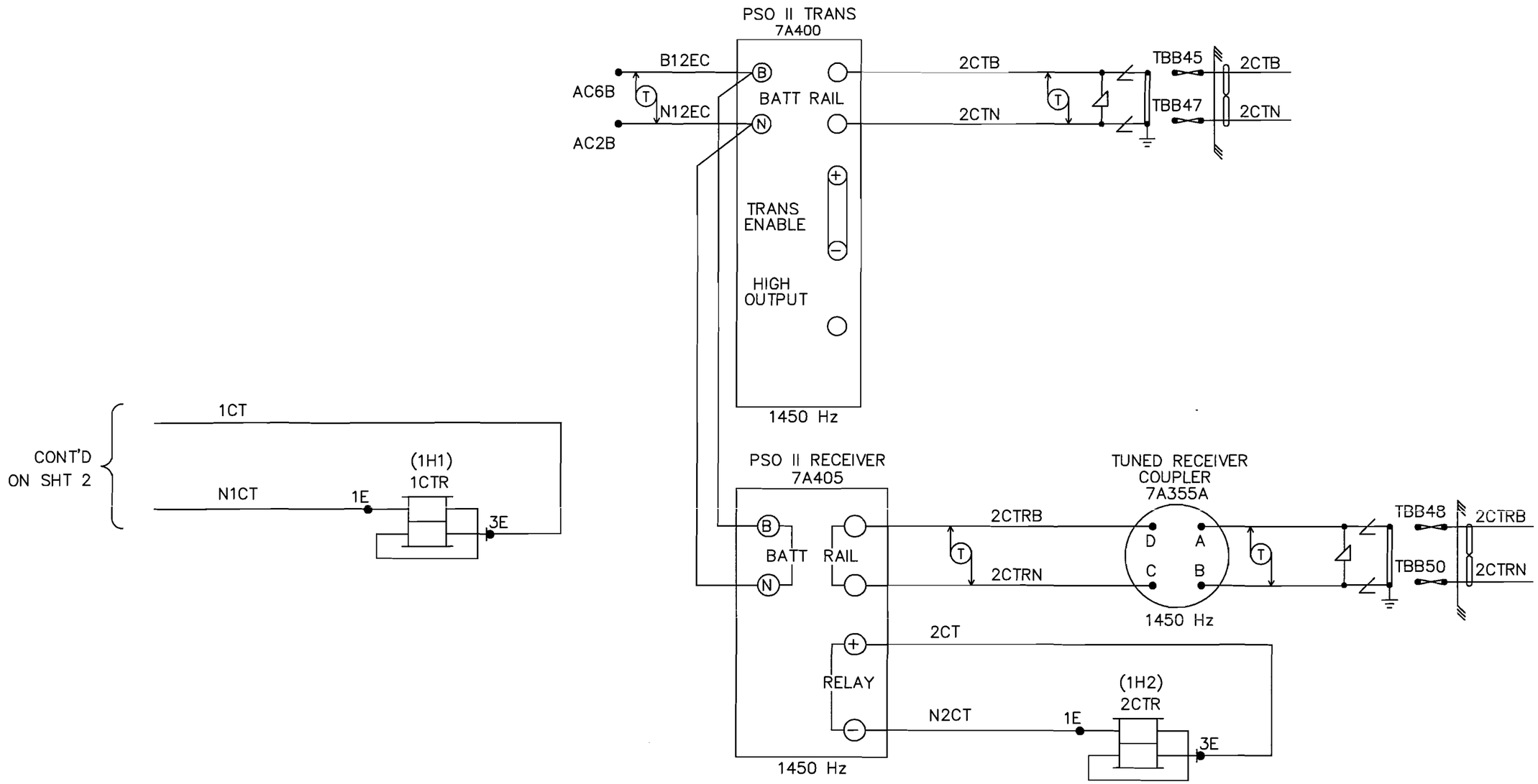


NOTE: ALL WIRING THIS SHEET TO BE #10AWG UNLESS OTHERWISE NOTED.

= TWIST TWO TURNS PER FOOT.

This drawing was created using CADD. All field and office changes are to be routed through Main Office in East Joliet. DO NOT make changes to this original copy without notifying the Engineer-Signals, Communications & Electrical.

| NO | DESCRIPTION | BY | CHK'D | DATE |
|---|---|---|---|---|
| 8 | | | | |
| 7 | | | | |
| 6 | | | | |
| 5 | | | | |
| 4 | | | | |
| 3 | | | | |
| 2 | | | | |
| 1 | | | | |
| | AS IN SERVICE | TWH | TWH | 4/08 |

REVISIONS

**ELGIN, JOLIET & EASTERN RAILWAY COMPANY**

PSO CIRCUITS
HAWTHORNE LANE
WEST CHICAGO, ILLINOIS

ENGINEERING SERVICES
JOLIET, IL 60432
SCALE NONE

CHECKED BY TWH
IN CHARGE OF TWH

DRAWN BY TWH
DATE 3/1/07
CAD ID 260538K-004.DWG

FILE NO. 260538K

SHEET NO. 4

CONT'D ON 5

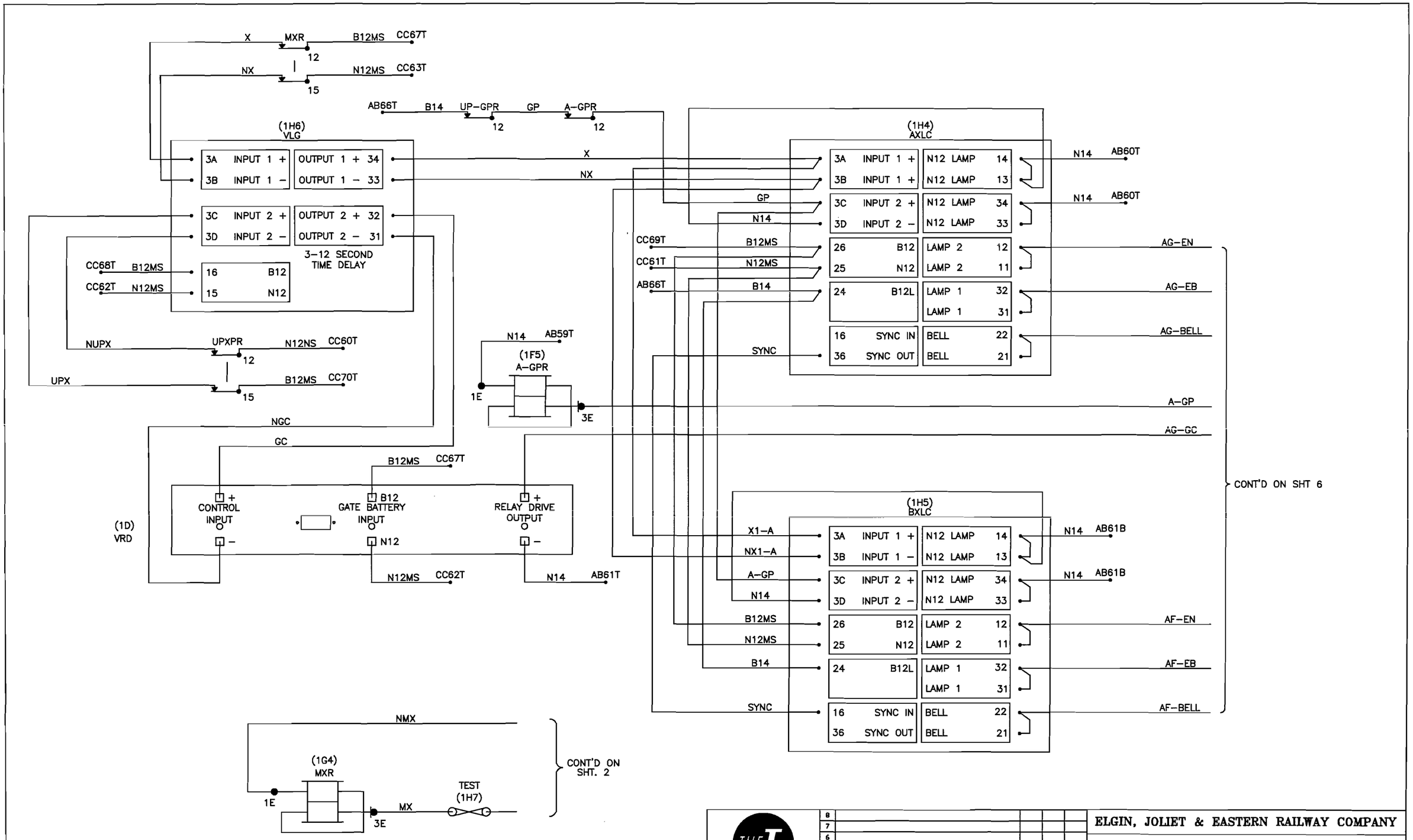


NOTES:
1. ALL WIRING THIS SHEET TO BE #10 UNLESS OTHERWISE SHOWN.
2. BEFORE PLACING IN SERVICE, VERIFY VLG IS SET FOR 3 SECOND DELAY

This drawing was created using CADD. All field and office changes are to be routed through Main Office in East Joliet. DO NOT make changes to this original copy without notifying the Engineer-Signals, Communications & Electrical

| NO | DESCRIPTION | BY | CHK'D | DATE |
|---|---|---|---|---|
| 8 | | | | |
| 7 | | | | |
| 6 | | | | |
| 5 | | | | |
| 4 | | | | |
| 3 | | | | |
| 2 | | | | |
| 1 | | | | |
| | AS IN SERVICE | TVH | TVH | 4/08 |

REVISIONS

**ELGIN, JOLIET & EASTERN RAILWAY COMPANY**

LOGIC GATE & LAMP CONTROL WIRING
HAWTHORNE LANE
WEST CHICAGO, ILLINOIS

ENGINEERING SERVICES
JOLIET, IL 60432
SCALE NONE

CHECKED BY TVH
IN CHARGE OF TVH

DRAWN BY TVH
DATE 3/1/07
CAD ID 260538K-065.DWG

FILE NO. 260538K | SHEET NO. 5 | CONT'D ON 6

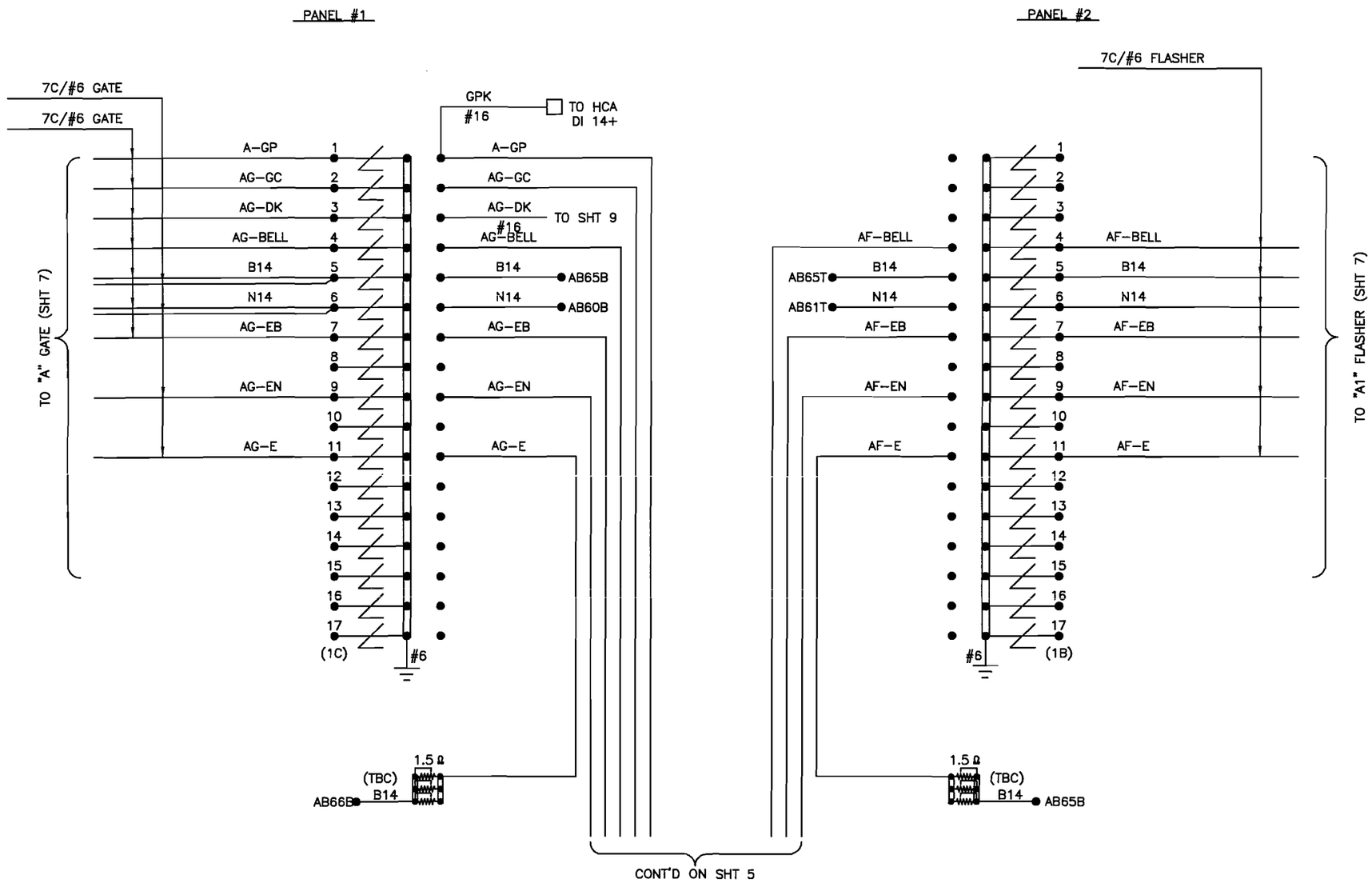


NOTES:

1. ALL WIRING THIS SHEET TO BE #10 UNLESS OTHERWISE SHOWN.
2. ADJUST ALL RESISTORS EVENLY.

This drawing was created using CADD. All field and office changes are to be routed through Main Office in East Joliet. DO NOT make changes to this original copy without notifying the Engineer-Signals, Communications & Electrical.

| NO | DESCRIPTION | BY | CHK'D | DATE |
|---|---|---|---|---|
| 8 | | | | |
| 7 | | | | |
| 6 | | | | |
| 5 | | | | |
| 4 | | | | |
| 3 | | | | |
| 2 | | | | |
| 1 | | | | |
| | AS IN SERVICE | TWH | TWH | 4/08 |

REVISIONS

**ELGIN, JOLIET & EASTERN RAILWAY COMPANY**

CABLE & ARRESTOR PANEL WIRING
HAWTHORNE LANE
WEST CHICAGO, ILLINOIS

ENGINEERING SERVICES
JOLIET, IL 60432
SCALE NONE

CHECKED BY TWH
IN CHARGE OF TWH

DRAWN BY TWH
DATE 3/1/07
CAD ID 260538K-006.DWG

FILE NO. 260538K | SHEET NO. 6 | CONT'D ON 7

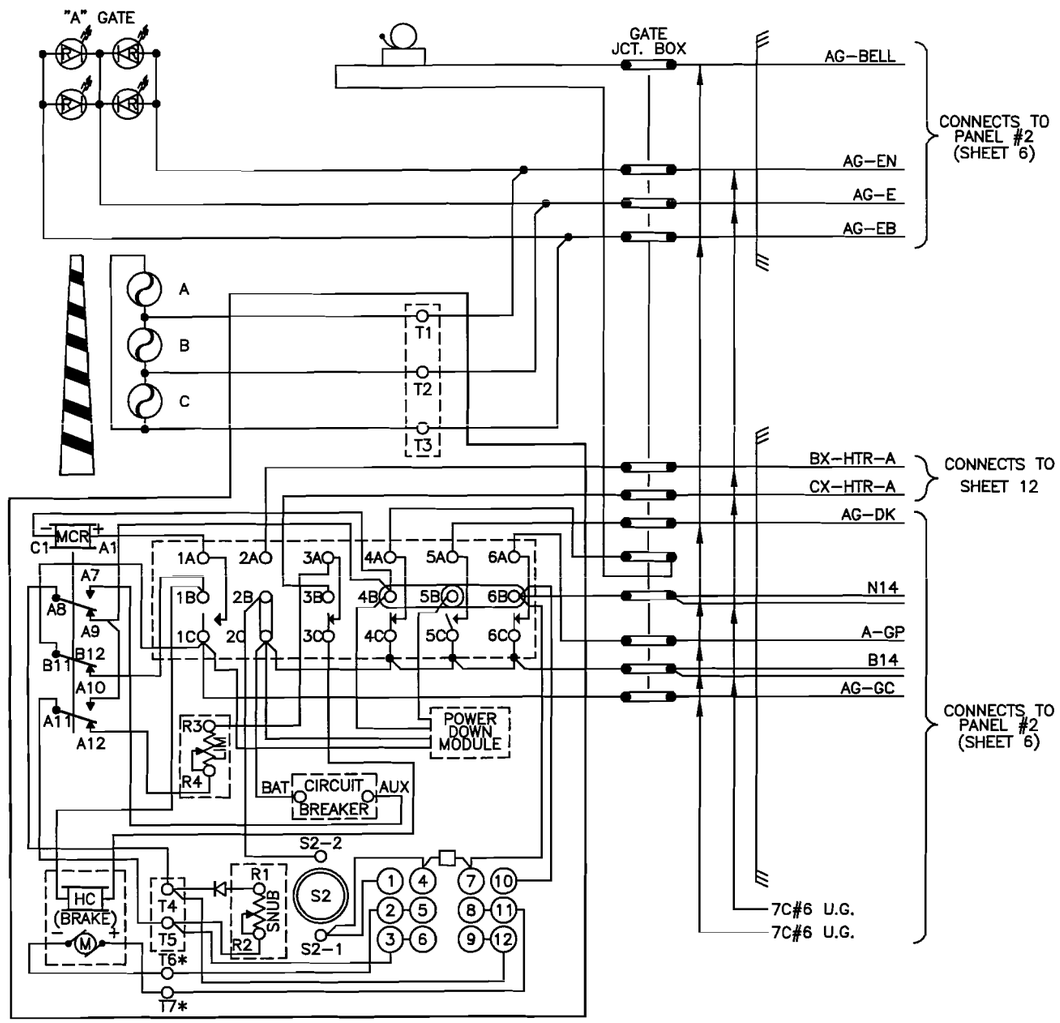


US & S MODEL 95 GATE MECHANISM
(SHOWN WITH MECHANISM IN VERTICAL POS.)

| CONTACT | CLOSED | FUNCTION |
|---|---|---|
| 1 | 0°–89° | MOTOR UP |
| 2 | | VACANT SLOT |
| 3 | 45°–90° | MOTOR DN |
| 4 | 5°–90° | BELL |
| 5 | 0° – 5° | GATE DN IND |
| 6 | 83°–90° | FLASH'G LIGHT |

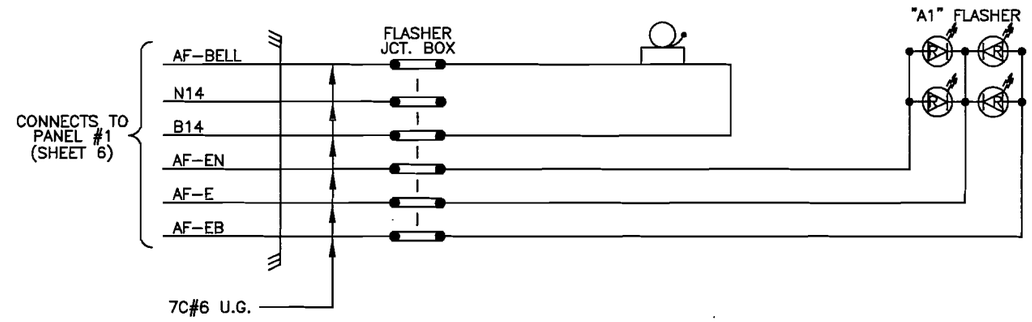


NOTES:

1. JUMPERS MUST BE ADDED TO EACH GATE AS SHOWN.
2. GROUND WIRE OF CABLE SHALL BE GROUNDED AT EACH GATE.
3. ALL LIGHT WIRES THIS PAGE ARE TO BE #10 AWG.
4. * = APPLY ONLY TO RETROFIT KIT
5. GATE 'A' B14 & N14 DOUBLED UP TO PREVENT VOLTAGE DROP

THE J

This drawing was created using CADD. All field and office changes are to be routed through Main Office in East Joliet. DO NOT make changes to this original copy without notifying the Engineer-Signals, Communications & Electrical

| NO | DESCRIPTION | BY | CHK'D | DATE |
|---|---|---|---|---|
| 8 | | | | |
| 7 | | | | |
| 6 | | | | |
| 5 | | | | |
| 4 | | | | |
| 3 | | | | |
| 2 | | | | |
| 1 | | | | |
| | AS IN SERVICE | TVH | TVH | 4/08 |

REVISIONS

**ELGIN, JOLIET & EASTERN RAILWAY COMPANY**

CROSSING GATE WIRING
HAWTHORNE LANE
WEST CHICAGO, ILLINOIS

ENGINEERING SERVICES
JOLIET, IL 60432
SCALE NONE

CHECKED BY TVH
IN CHARGE OF TVH

DRAWN BY TVH
DATE 3/1/07
CAD ID 260538K-007.DWG

FILE NO. 260538K
SHEET NO. 7
CONT'D ON 8

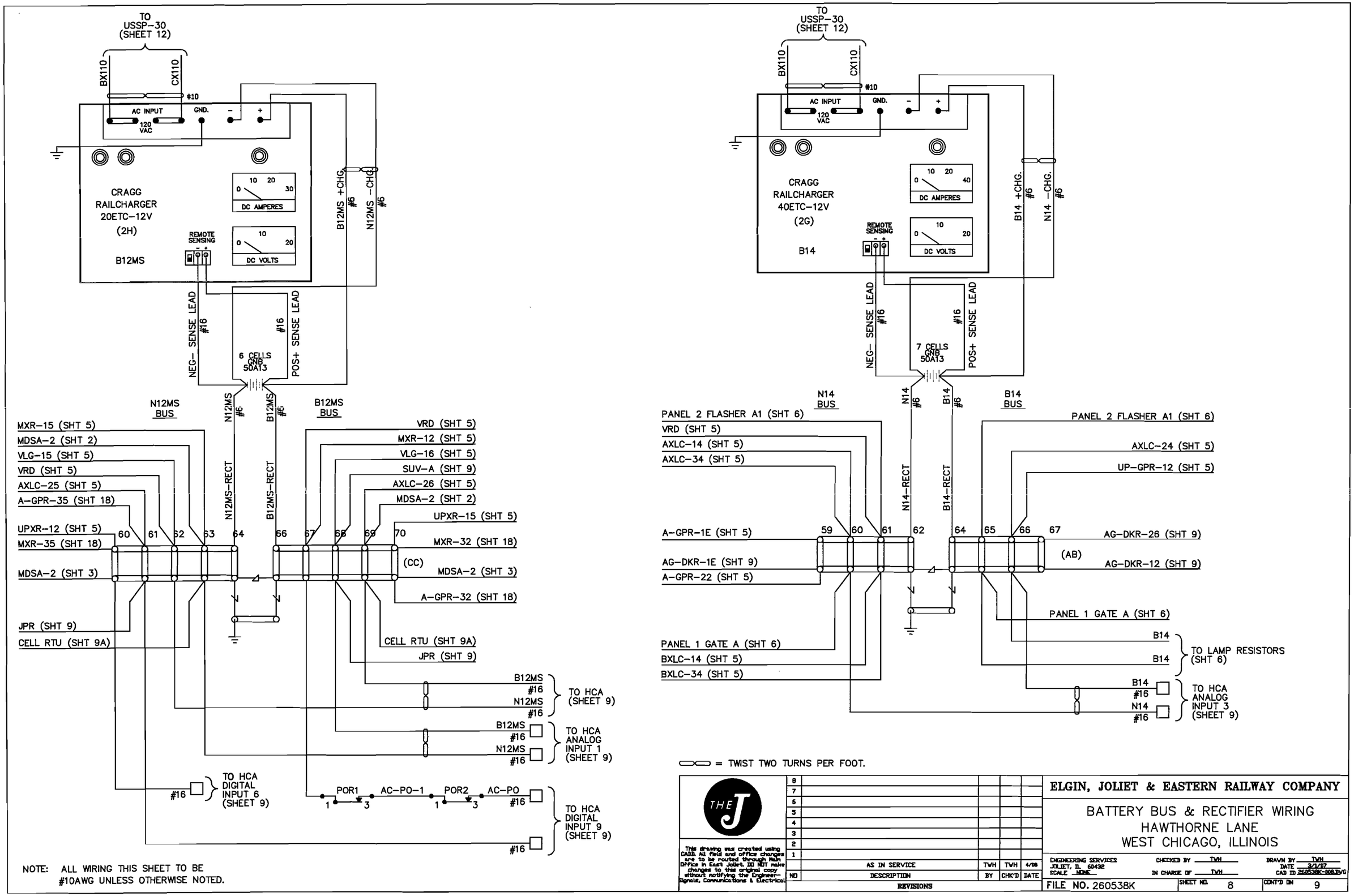
TO USSP-30 (SHEET 12)
BX110
CX110
#10
AC INPUT
120 VAC
GND.
CRAGG RAILCHARGER 20ETC-12V (2H)
B12MS
DC AMPERES
DC VOLTS
REMOTE SENSING
B12MS +CHG #6
N12MS -CHG #6
NEG- SENSE LEAD #16
POS+ SENSE LEAD #16
6 CELLS GNB 50A13
N12MS BUS
B12MS BUS
N12MS #6
B12MS #6
N12MS-RECT
B12MS-RECT
MXR-15 (SHT 5)
MDSA-2 (SHT 2)
VLG-15 (SHT 5)
VRD (SHT 5)
AXLC-25 (SHT 5)
A-GPR-35 (SHT 18)
UPXR-12 (SHT 5)
MXR-35 (SHT 18)
MDSA-2 (SHT 3)
JPR (SHT 9)
CELL RTU (SHT 9A)
VRD (SHT 5)
MXR-12 (SHT 5)
VLG-16 (SHT 5)
SUV-A (SHT 9)
AXLC-26 (SHT 5)
MDSA-2 (SHT 2)
UPXR-15 (SHT 5)
MXR-32 (SHT 18)
(CC)
MDSA-2 (SHT 3)
A-GPR-32 (SHT 18)
CELL RTU (SHT 9A)
JPR (SHT 9)
60 61 62 63 64 66 67 68 69 70
B12MS #16
N12MS #16
TO HCA (SHEET 9)
B12MS #16
N12MS #16
TO HCA ANALOG INPUT 1 (SHEET 9)
#16
TO HCA DIGITAL INPUT 6 (SHEET 9)
POR1
AC-PO-1
POR2
AC-PO
1 3 1 3
#16
TO HCA DIGITAL INPUT 9 (SHEET 9)
#16
NOTE: ALL WIRING THIS SHEET TO BE #10AWG UNLESS OTHERWISE NOTED.
TO USSP-30 (SHEET 12)
BX110
CX110
#10
AC INPUT
120 VAC
GND.
CRAGG RAILCHARGER 40ETC-12V (2G)
B14
DC AMPERES
DC VOLTS
REMOTE SENSING
B14 +CHG. #6
N14 -CHG. #6
NEG- SENSE LEAD #16
POS+ SENSE LEAD #16
7 CELLS GNB 50A13
N14 BUS
B14 BUS
N14 #6
B14 #6
N14-RECT
B14-RECT
PANEL 2 FLASHER A1 (SHT 6)
VRD (SHT 5)
AXLC-14 (SHT 5)
AXLC-34 (SHT 5)
A-GPR-1E (SHT 5)
AG-DKR-1E (SHT 9)
A-GPR-22 (SHT 5)
PANEL 1 GATE A (SHT 6)
BXLC-14 (SHT 5)
BXLC-34 (SHT 5)
PANEL 2 FLASHER A1 (SHT 6)
AXLC-24 (SHT 5)
UP-GPR-12 (SHT 5)
AG-DKR-26 (SHT 9)
(AB)
AG-DKR-12 (SHT 9)
PANEL 1 GATE A (SHT 6)
59 60 61 62 64 65 66 67
B14
B14
TO LAMP RESISTORS (SHT 6)
B14 #16
N14 #16
TO HCA ANALOG INPUT 3 (SHEET 9)
= TWIST TWO TURNS PER FOOT.
THE J
This drawing was created using CADD. All field and office changes are to be routed through Main Office in East Joliet. DO NOT make changes to this original copy without notifying the Engineer-Signals, Communications & Electrical.
8
7
6
5
4
3
2
1
AS IN SERVICE TWH TWH 4/08
NO DESCRIPTION BY CHK'D DATE
REVISIONS
ELGIN, JOLIET & EASTERN RAILWAY COMPANY
BATTERY BUS & RECTIFIER WIRING
HAWTHORNE LANE
WEST CHICAGO, ILLINOIS
ENGINEERING SERVICES
JOLIET, IL 60432
SCALE NONE
CHECKED BY TWH
IN CHARGE OF TWH
DRAWN BY TWH
DATE 3/1/07
CAD ID 260538K-B08.DWG
FILE NO. 260538K
SHEET NO. 8
CONT'D ON 9

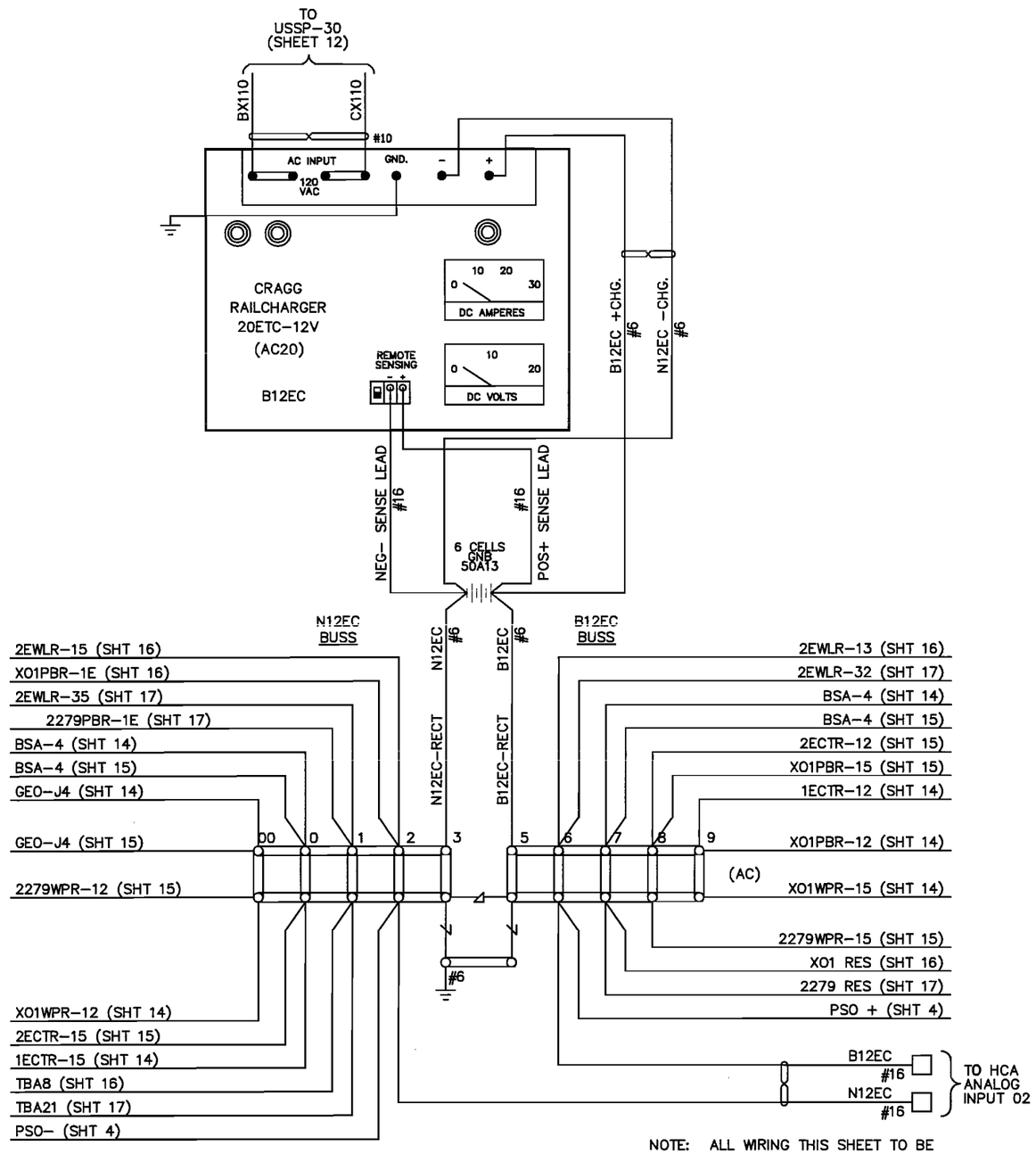


NOTE: ALL WIRING THIS SHEET TO BE #10AWG UNLESS OTHERWISE NOTED.

= TWIST TWO TURNS PER FOOT.

This drawing was created using CADD. All field and office changes are to be routed through Main Office in East Joliet. DO NOT make changes to this original copy without notifying the Engineer-Signals, Communications & Electrical.

| NO | DESCRIPTION | BY | CHK'D | DATE |
|---|---|---|---|---|
| 8 | | | | |
| 7 | | | | |
| 6 | | | | |
| 5 | | | | |
| 4 | | | | |
| 3 | | | | |
| 2 | | | | |
| 1 | | | | |
| | AS IN SERVICE | TWH | TWH | 4/08 |

REVISIONS

**ELGIN, JOLIET & EASTERN RAILWAY COMPANY**

BATTERY & RECTIFIER WIRING – B12EC
HAWTHORNE LANE
WEST CHICAGO, ILLINOIS

ENGINEERING SERVICES
JOLIET, IL 60432
SCALE NONE

CHECKED BY TWH
IN CHARGE OF TWH

DRAWN BY TWH
DATE 3/1/07
CAD ID 260538K-008AJWG

FILE NO. 260538K | SHEET NO. 8A | CONT'D ON 9

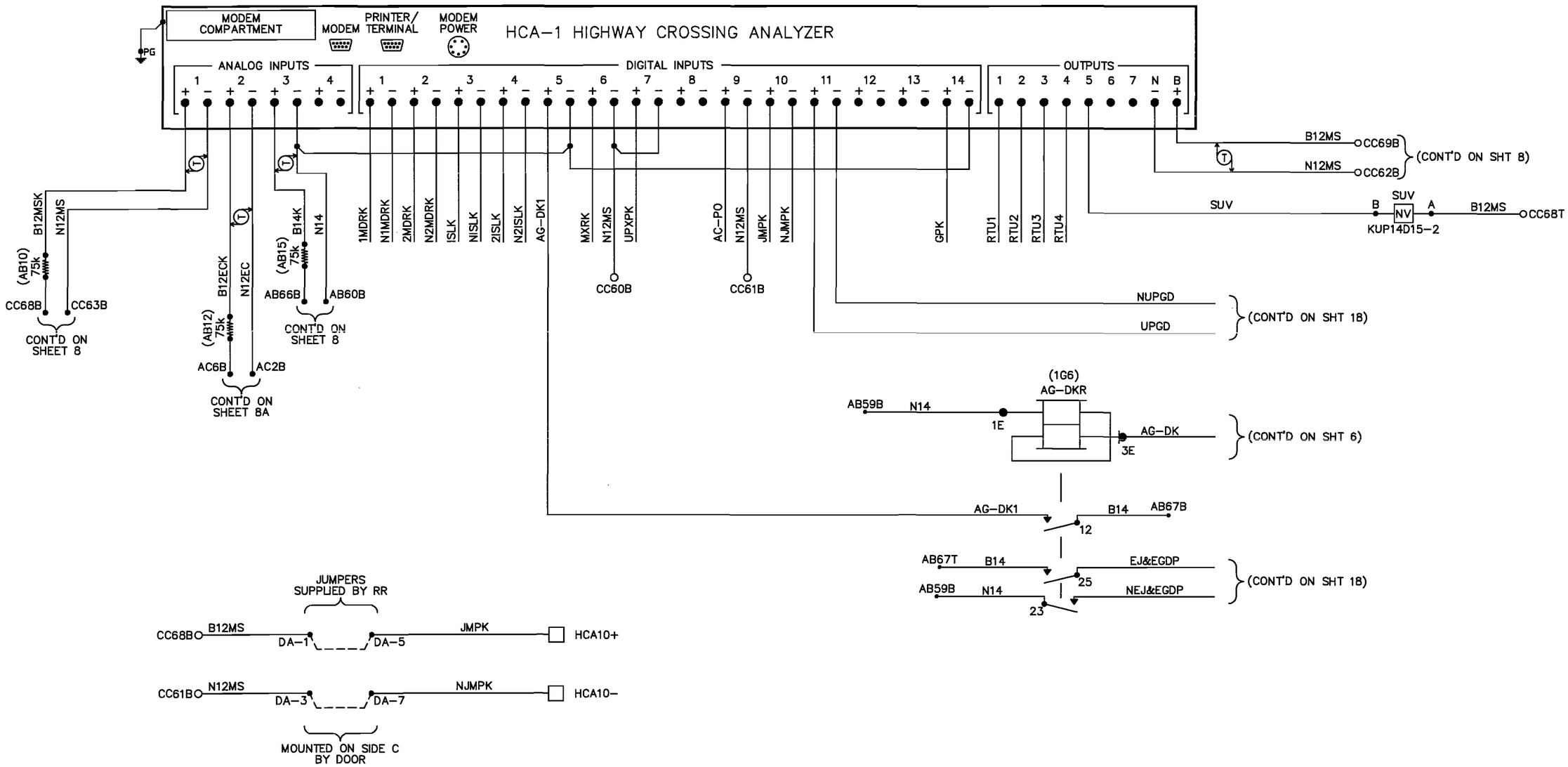


NOTES:

1. ALL WIRING ON THIS SHEET TO BE #16 UNLESS OTHERWISE NOTED.

This drawing was created using CADD. All field and office changes are to be routed through Main Office in East Joliet. DO NOT make changes to this original copy without notifying the Engineer-Signals, Communications & Electrical

| NO | DESCRIPTION | BY | CHK'D | DATE |
|---|---|---|---|---|
| 8 | | | | |
| 7 | | | | |
| 6 | | | | |
| 5 | | | | |
| 4 | | | | |
| 3 | | | | |
| 2 | | | | |
| 1 | | | | |
| | AS IN SERVICE | TWH | TWH | 4/08 |

REVISIONS

**ELGIN, JOLIET & EASTERN RAILWAY COMPANY**

HCA & LOD WIRING
HAWTHORNE LANE
WEST CHICAGO, ILLINOIS

ENGINEERING SERVICES
JOLIET, IL 60432
SCALE NONE

CHECKED BY TWH
IN CHARGE OF TWH

DRAWN BY TWH
DATE 3/1/07
CAD ID 260538KJ-009.DVG

FILE NO. 260538K
SHEET NO. 9
CONT'D ON 9A

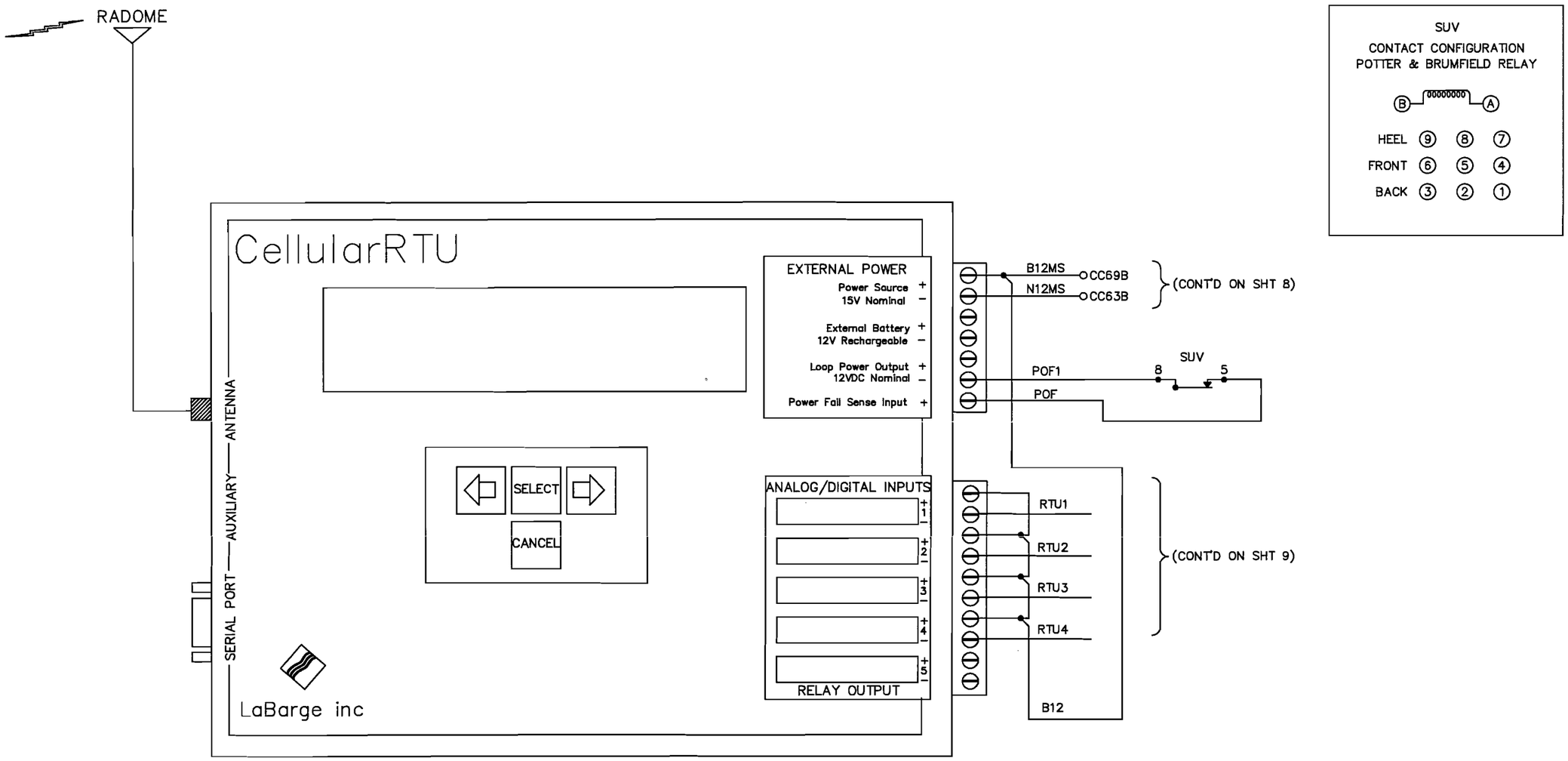


This drawing was created using CADD. All field and office changes are to be routed through Main Office in East Joliet. DO NOT make changes to this original copy without notifying the Engineer-Signals, Communications & Electrical

| NO | DESCRIPTION | BY | CHK'D | DATE |
|---|---|---|---|---|
| 8 | | | | |
| 7 | | | | |
| 6 | | | | |
| 5 | | | | |
| 4 | | | | |
| 3 | | | | |
| 2 | | | | |
| 1 | | | | |
| | AS IN SERVICE | TWH | TWH | 4/08 |

REVISIONS

**ELGIN, JOLIET & EASTERN RAILWAY COMPANY**

RTU WIRING
HAWTHORNE LANE
WEST CHICAGO, ILLINOIS

ENGINEERING SERVICES
JOLIET, IL 60432
SCALE NONE

CHECKED BY TWH
IN CHARGE OF TWH

DRAWN BY TWH
DATE 3/1/07
CAD ID. [redacted]

FILE NO. 260538K
SHEET NO. 9A
CONT'D ON 10

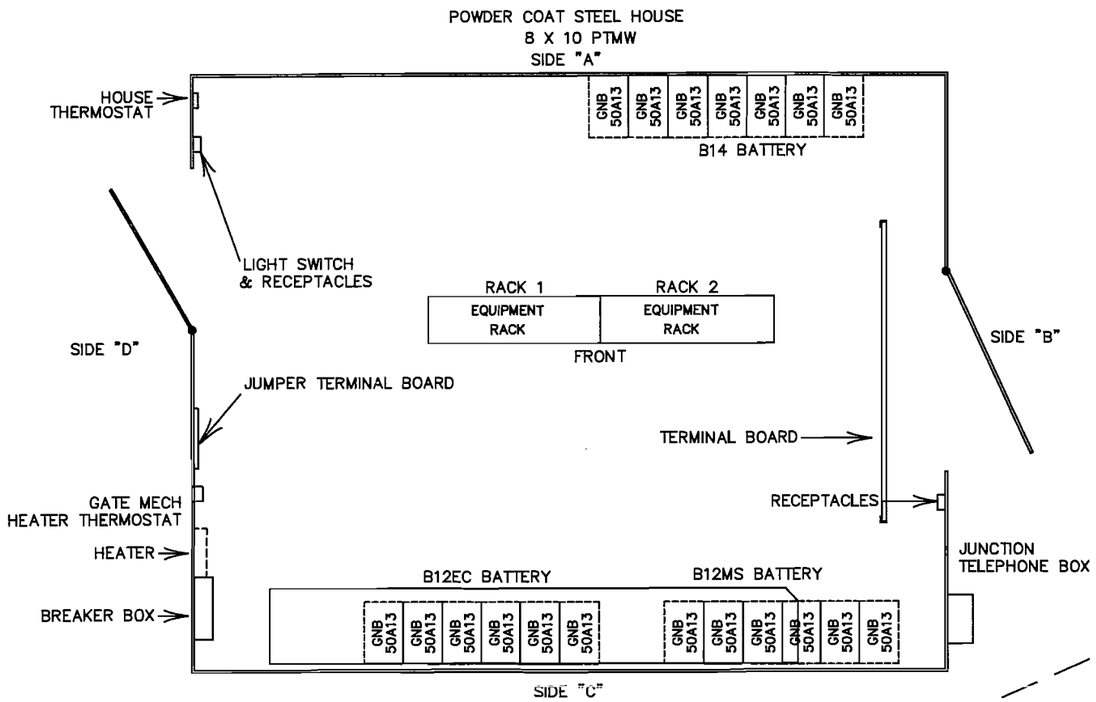


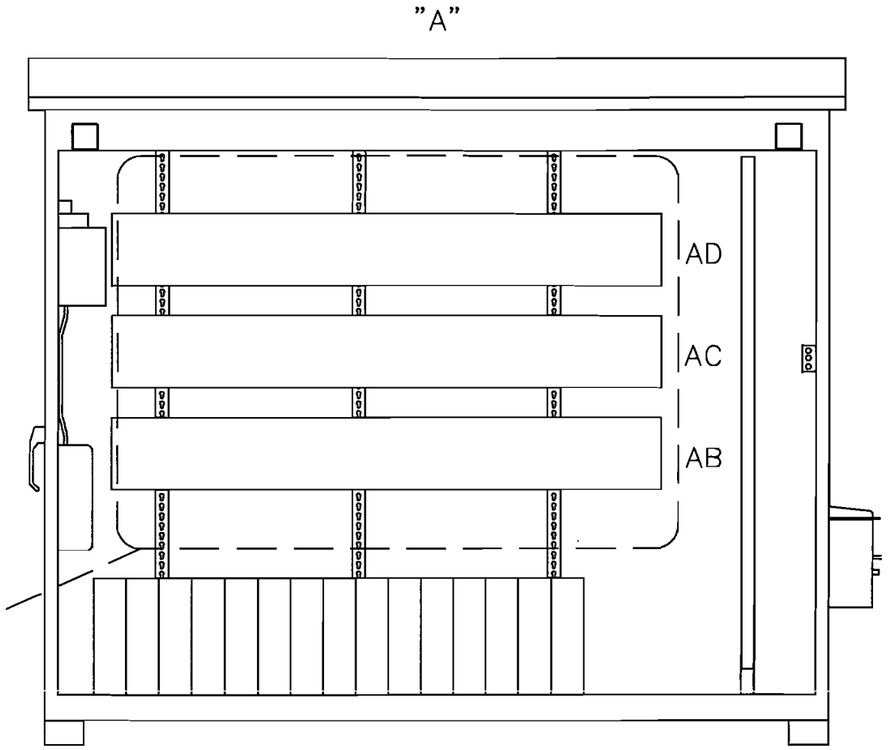


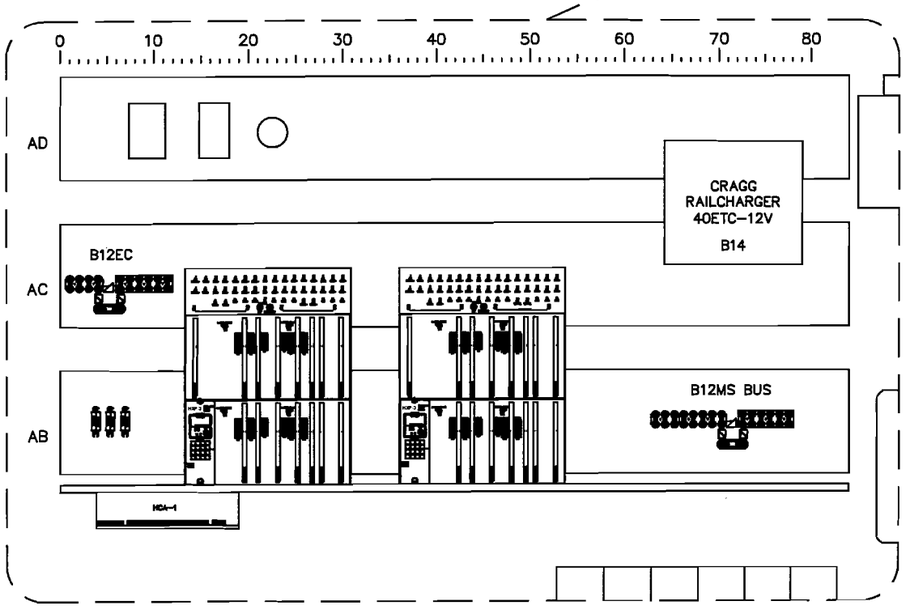


This drawing was created using CADD. All field and office changes are to be routed through Main Office in East Joliet, IL. DO NOT make changes to this original copy without notifying the Engineer-Signals, Communications & Electrical.

| NO | DESCRIPTION | BY | CHK'D | DATE |
|---|---|---|---|---|
| 8 | | | | |
| 7 | | | | |
| 6 | | | | |
| 5 | | | | |
| 4 | | | | |
| 3 | | | | |
| 2 | | | | |
| 1 | | | | |
| | AS IN SERVICE | TVH | TVH | 4/08 |

REVISIONS

**ELGIN, JOLIET & EASTERN RAILWAY COMPANY**

HOUSE LAYOUT
HAWTHORNE LANE
WEST CHICAGO, ILLINOIS

ENGINEERING SERVICES
JOLIET, IL 60432
SCALE NONE

CHECKED BY TVH
IN CHARGE OF TVH

DRAWN BY TVH
DATE 3/1/07
CAD ID 260538K-010.DWG

FILE NO. 260538K

SHEET NO. 10

CONT'D ON 11

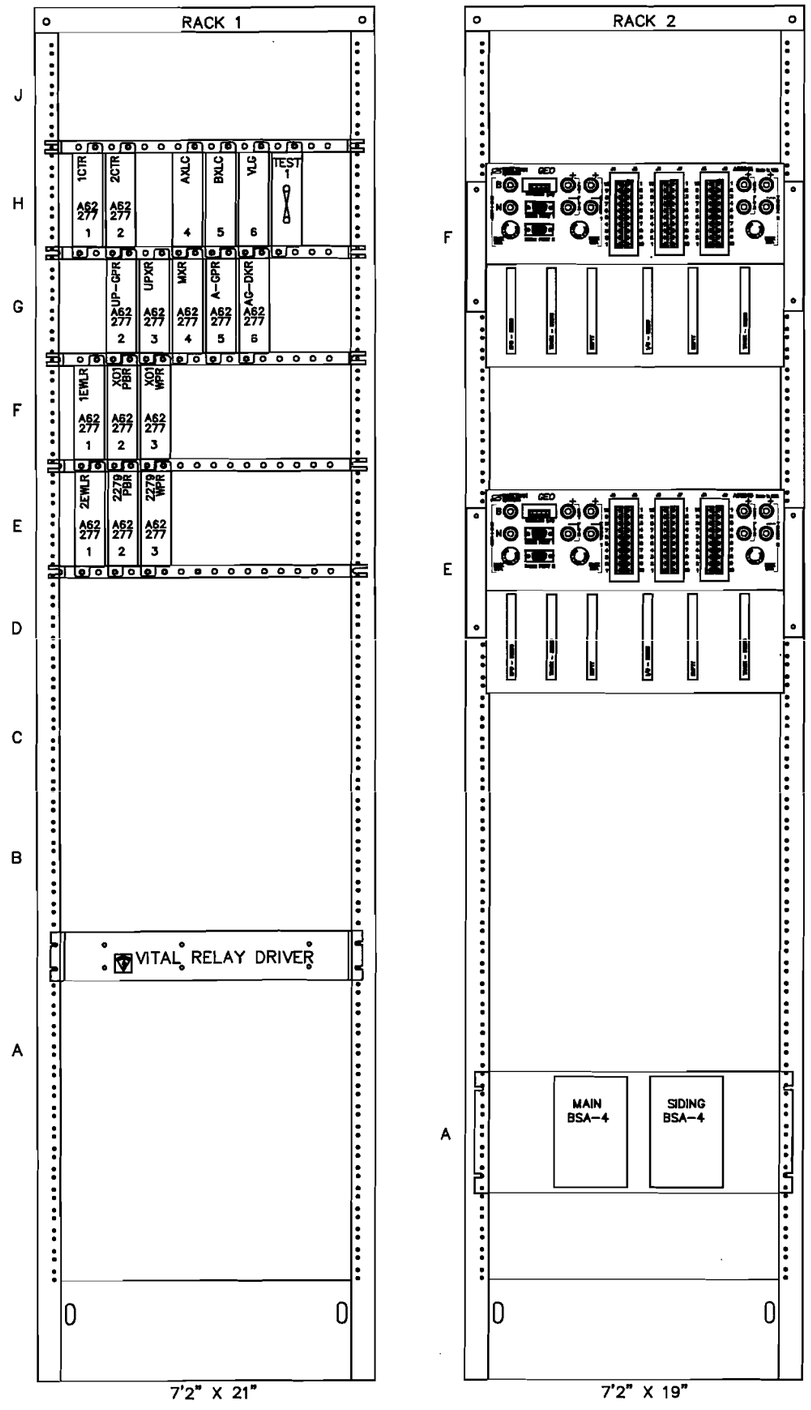





NOTE:

1. ALL WIRING TO BE 16AWG UNLESS DESIGNATED OTHERWISE.

This drawing was created using CADD. All field and office changes are to be routed through Main Office in East Joliet. DO NOT make changes to this original copy without notifying the Engineer-Signals, Communications & Electrical.

| NO | DESCRIPTION | BY | CHK'D | DATE |
|---|---|---|---|---|
| 8 | | | | |
| 7 | | | | |
| 6 | | | | |
| 5 | | | | |
| 4 | | | | |
| 3 | | | | |
| 2 | | | | |
| 1 | | | | |
| | AS IN SERVICE | TWH | TWH | 4/08 |

REVISIONS

**ELGIN, JOLIET & EASTERN RAILWAY COMPANY**

RACK 1 & 2 LAYOUT DETAIL
HAWTHORNE LANE
WEST CHICAGO, ILLINOIS

ENGINEERING SERVICES
JOLIET, IL 60432
SCALE NONE

CHECKED BY TWH
IN CHARGE OF TWH

DRAWN BY TWH
DATE 3/1/07
CAD ID 260538K-011.DWG

FILE NO. 260538K | SHEET NO. 11 | CONT'D ON 11A

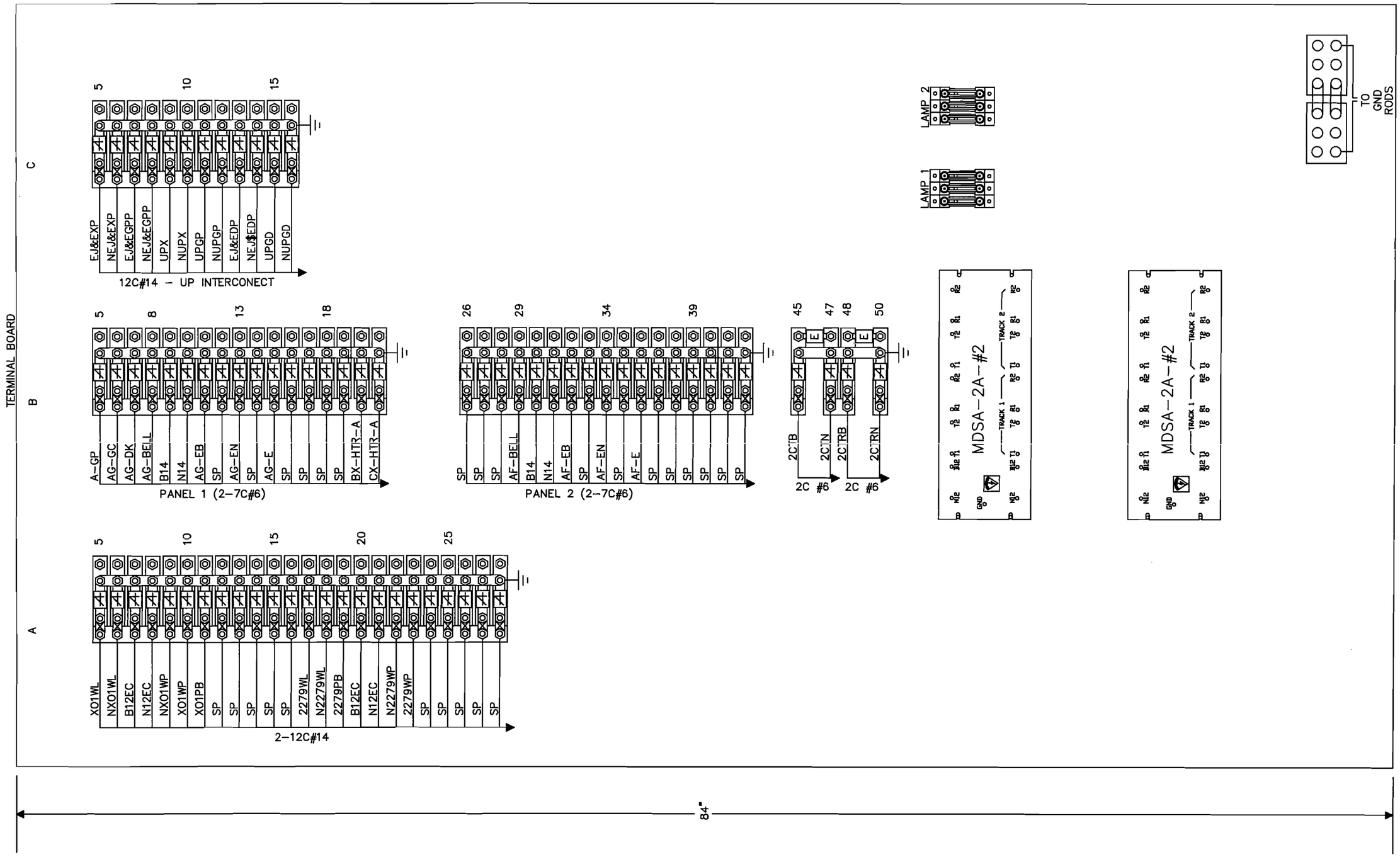


This drawing was created using CADD. All field and office changes are to be routed through Main Office in East Joliet. DO NOT make changes to this original copy without notifying the Engineer–Signals, Communications & Electrical.

| NO | DESCRIPTION | BY | CHK'D | DATE |
|---|---|---|---|---|
| | AS IN SERVICE | TWH | TWH | 4/08 |
| 1 | | | | |
| 2 | | | | |
| 3 | | | | |
| 4 | | | | |
| 5 | | | | |
| 6 | | | | |
| 7 | | | | |
| 8 | | | | |

REVISIONS

**ELGIN, JOLIET & EASTERN RAILWAY COMPANY**

TERMINAL BOARD LAYOUT
HAWTHORNE LANE
WEST CHICAGO, ILLINOIS

ENGINEERING SERVICES
JOLIET, IL 60432
SCALE NONE

CHECKED BY TWH
IN CHARGE OF TWH

DRAWN BY TWH
DATE 3.0.07
CAD ID 260538K–011A.DWG

FILE NO. 260538K | SHEET NO. 11A | CONT'D ON 12

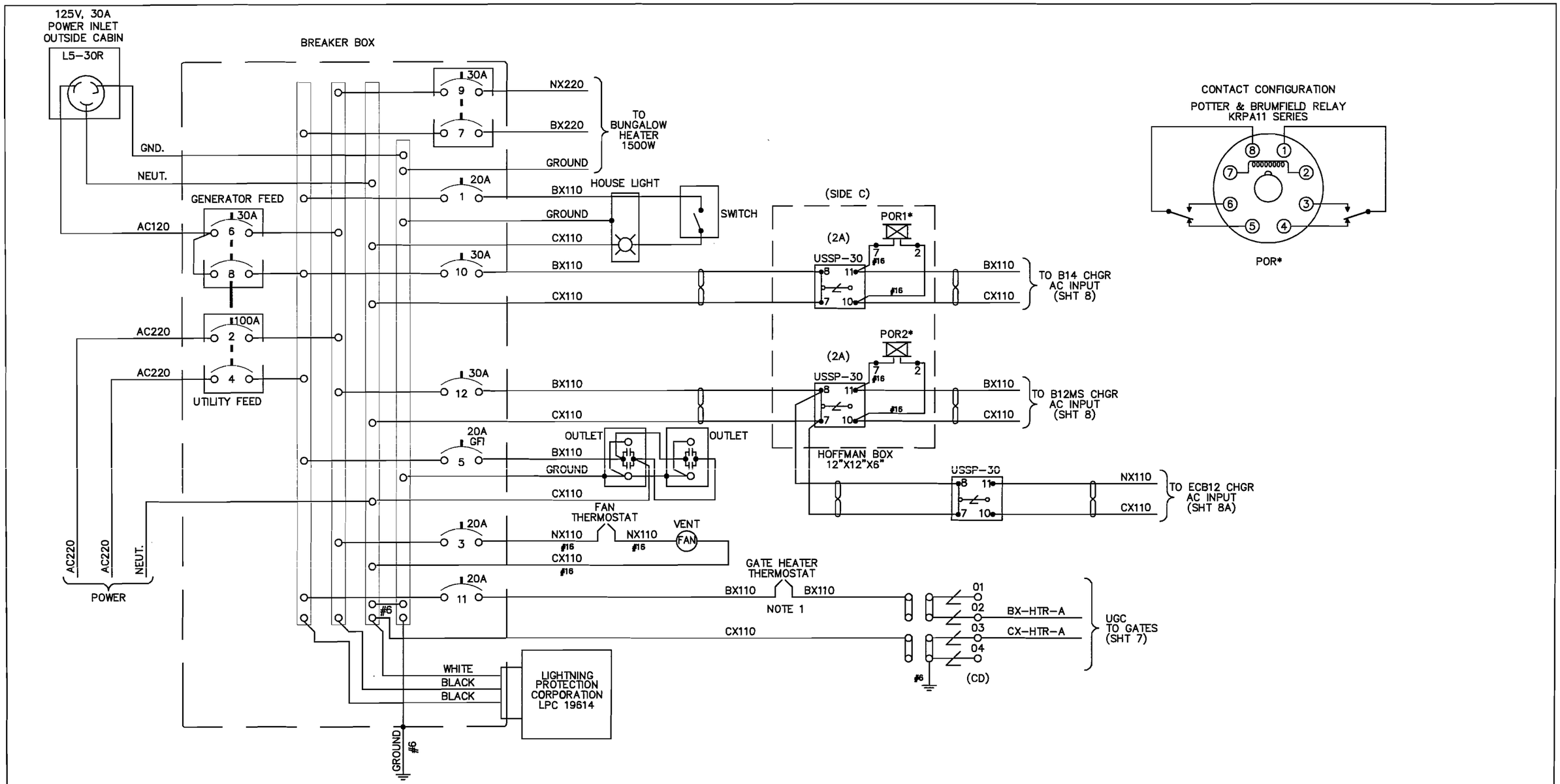


LEGEND:

= TWIST TWO TURNS PER FOOT.

NOTES:

1.) REMOTE TEMPERATURE SENSING BULB TO BE MOUNTED OUTSIDE OF HOUSE.

2.) * = 120VAC NON-VITAL AC RELAY KRPA11-120, 5A.

3.) ALL WIRING THIS SHEET TO BE #10 AWG. UNLESS OTHERWISE NOTED.

This drawing was created using CADD. All field and office changes are to be routed through Main Office in East Joliet. DO NOT make changes to this original copy without notifying the Engineer-Signals, Communications & Electrical

| NO | DESCRIPTION | BY | CHK'D | DATE |
|---|---|---|---|---|
| 8 | | | | |
| 7 | | | | |
| 6 | | | | |
| 5 | | | | |
| 4 | | | | |
| 3 | | | | |
| 2 | | | | |
| 1 | | | | |
| | AS IN SERVICE | TWH | TWH | 4/08 |

REVISIONS

**ELGIN, JOLIET & EASTERN RAILWAY COMPANY**

AC POWER DISTRIBUTION
HAWTHORNE LANE
WEST CHICAGO, ILLINOIS

ENGINEERING SERVICES
JOLIET, IL 60432
SCALE NONE

CHECKED BY TWH
IN CHARGE OF TWH

DRAWN BY TWH
DATE 3/1/07
CAD ID 260538K-012.DWG

FILE NO. 260538K | SHEET NO. 12 | CONT'D ON 13

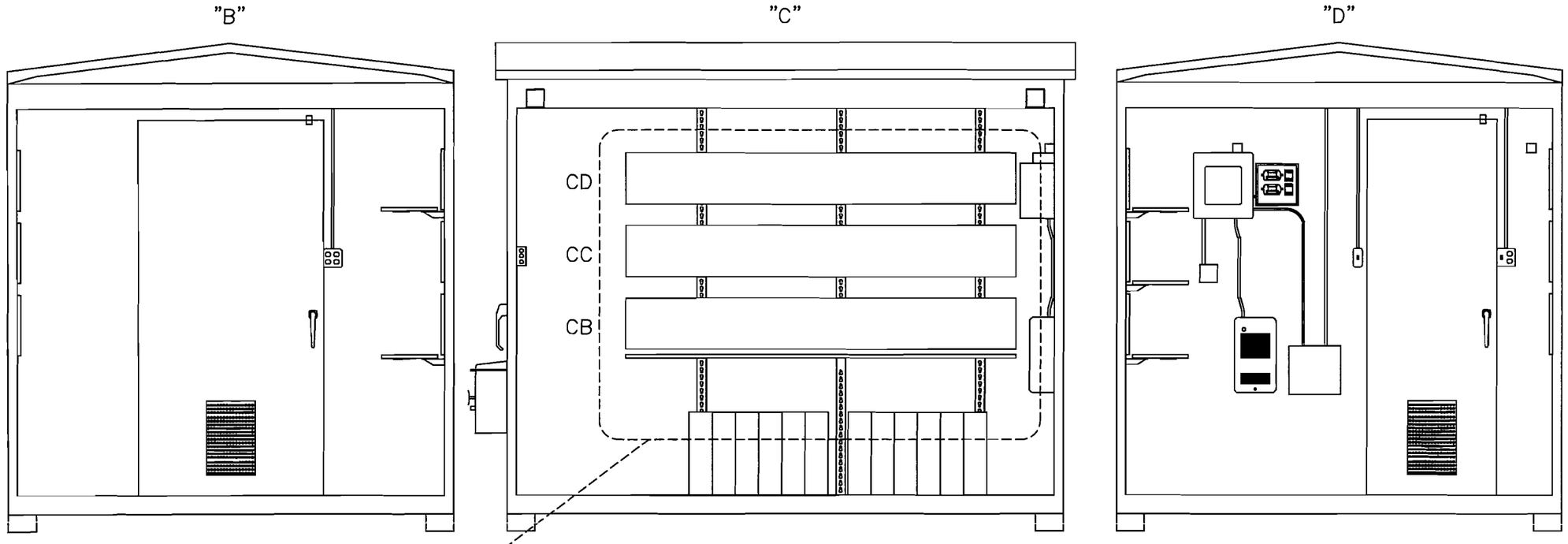


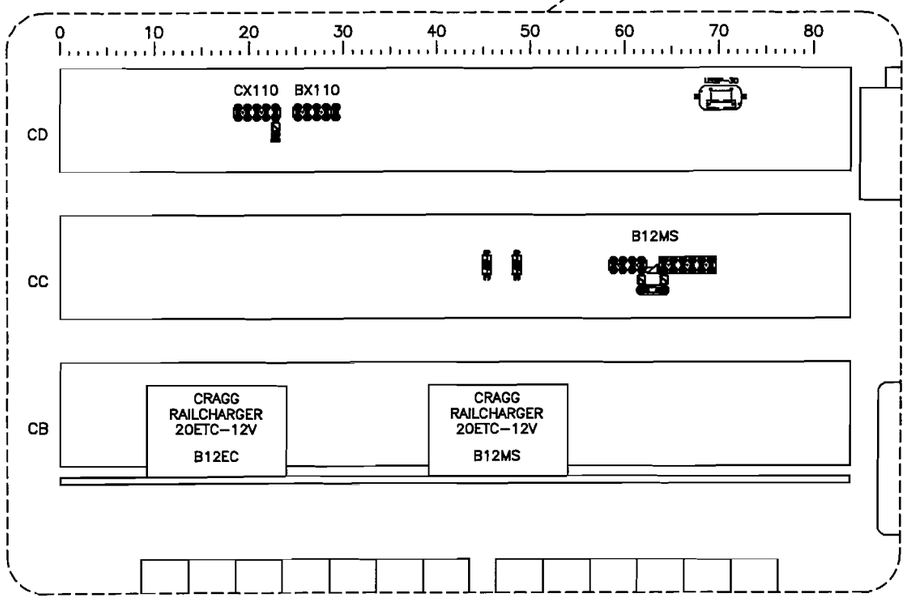


HOFFMAN BOX DETAIL

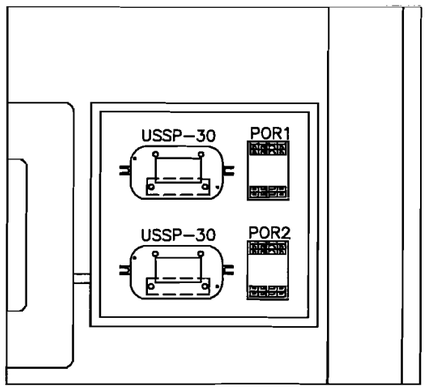


This drawing was created using CADD. All field and office changes are to be routed through Main Office in East Joliet. DO NOT make changes to this original copy without notifying the Engineer-Signals, Communications & Electrical

| NO | DESCRIPTION | BY | CHK'D | DATE |
|---|---|---|---|---|
| 8 | | | | |
| 7 | | | | |
| 6 | | | | |
| 5 | | | | |
| 4 | | | | |
| 3 | | | | |
| 2 | | | | |
| 1 | | | | |
| | AS IN SERVICE | TWH | TWH | 4/08 |

REVISIONS

**ELGIN, JOLIET & EASTERN RAILWAY COMPANY**

WALL "C" LAYOUT DETAIL
HAWTHORNE LANE
WEST CHICAGO, ILLINOIS

ENGINEERING SERVICES
JOLIET, IL 60432
SCALE NONE

CHECKED BY TWH
IN CHARGE OF TWH

DRAWN BY TWH
DATE 3/1/97
CAD ID 260538K-013.DWG

FILE NO. 260538K

SHEET NO. 13

CONT'D ON 14

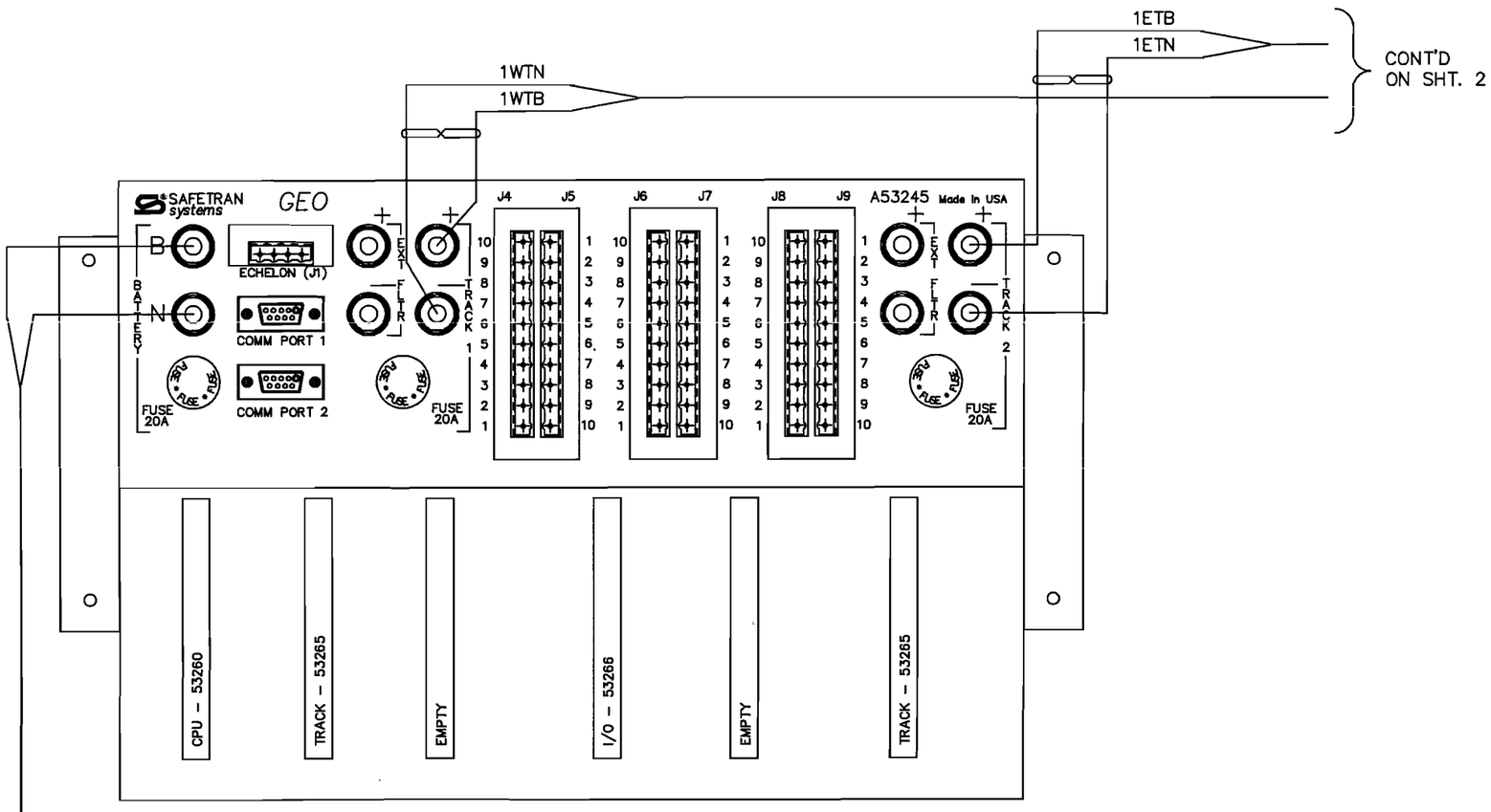


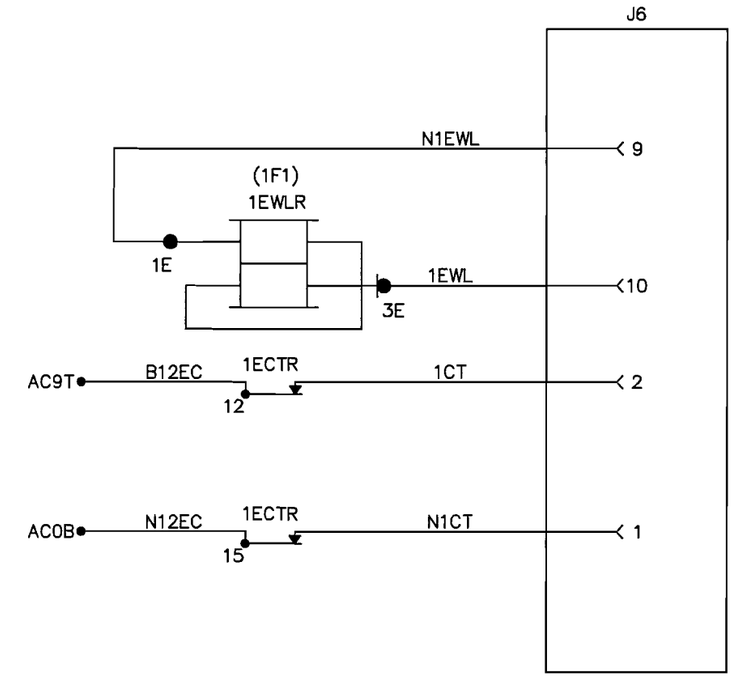


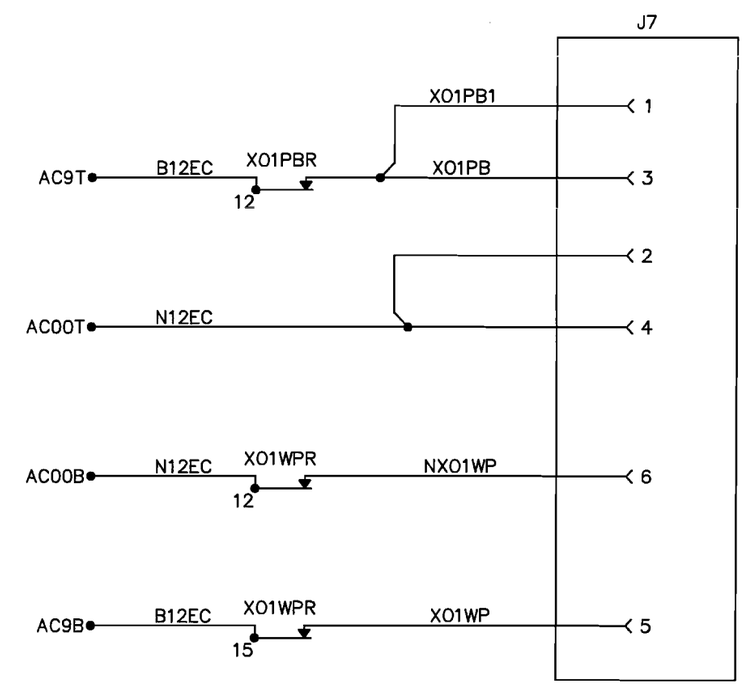


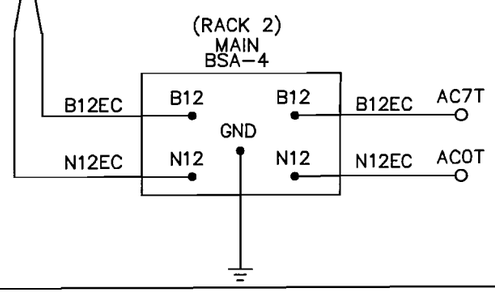


This drawing was created using CADD. All field and office changes are to be routed through Main Office in East Joliet. DO NOT make changes to this original copy without notifying the Engineer– Signals, Communications & Electrical.

| NO | DESCRIPTION | BY | CHK'D | DATE |
|---|---|---|---|---|
| 8 | | | | |
| 7 | | | | |
| 6 | | | | |
| 5 | | | | |
| 4 | | | | |
| 3 | | | | |
| 2 | | | | |
| 1 | | | | |
| | AS IN SERVICE | TWH | TWH | 4/08 |

REVISIONS

**ELGIN, JOLIET & EASTERN RAILWAY COMPANY**

GEO CIRCUITS – MAIN
HAWTHORNE LANE
WEST CHICAGO, ILLINOIS

ENGINEERING SERVICES
JOLIET, IL 60432
SCALE NONE

CHECKED BY TWH
IN CHARGE OF TWH

DRAWN BY TWH
DATE 3/1/07
CAD ID 260538K–014.DWG

FILE NO. 260538K | SHEET NO. 14 | CONT'D ON 15

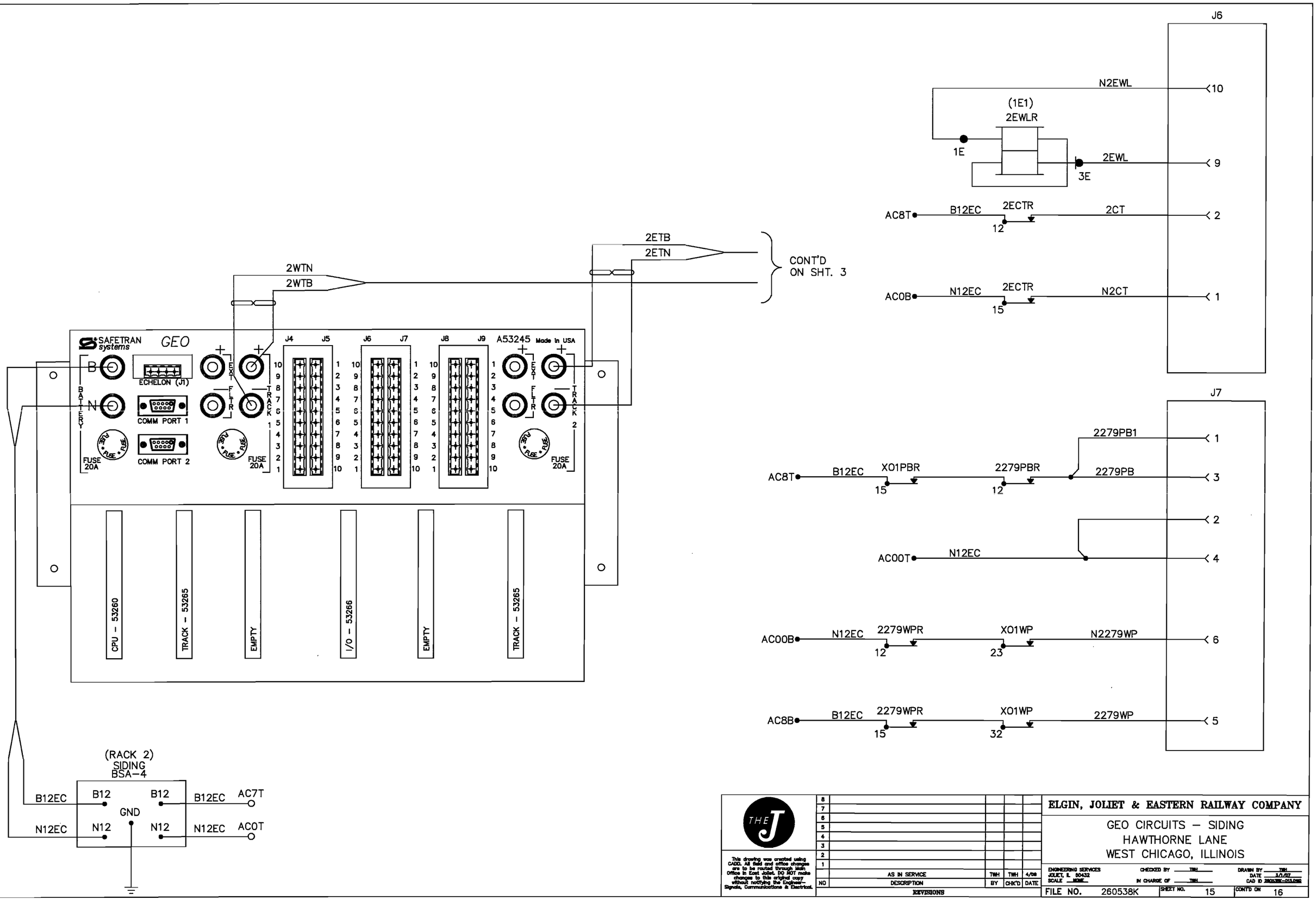


This drawing was created using CADD. All field and office changes are to be routed through Main Office in East Joliet. DO NOT make changes to this original copy without notifying the Engineer-Signals, Communications & Electrical.

| NO | DESCRIPTION | BY | CHK'D | DATE |
|---|---|---|---|---|
| 8 | | | | |
| 7 | | | | |
| 6 | | | | |
| 5 | | | | |
| 4 | | | | |
| 3 | | | | |
| 2 | | | | |
| 1 | | | | |
| | AS IN SERVICE | TWH | TWH | 4/08 |

REVISIONS

**ELGIN, JOLIET & EASTERN RAILWAY COMPANY**

GEO CIRCUITS – SIDING
HAWTHORNE LANE
WEST CHICAGO, ILLINOIS

ENGINEERING SERVICES
JOLIET, IL 60432
SCALE NONE

CHECKED BY TWH
IN CHARGE OF TWH

DRAWN BY TWH
DATE 3/1/07
CAD ID 260538K-015.DWG

FILE NO. 260538K
SHEET NO. 15
CONT'D ON 16

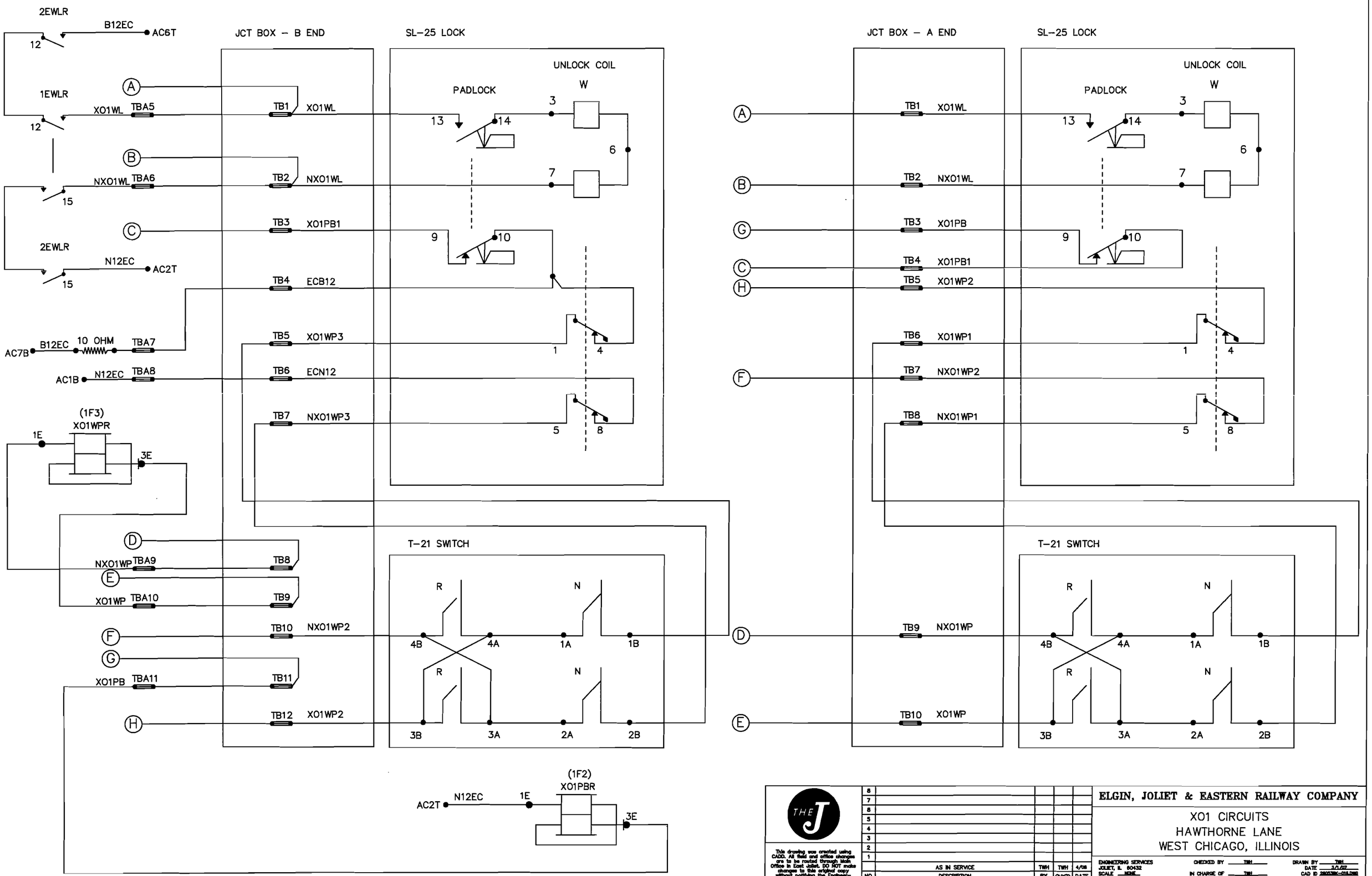


This drawing was created using CADD. All field and office changes are to be routed through Main Office in East Joliet. DO NOT make changes to this original copy without notifying the Engineer– Signals, Communications & Electrical.

| NO | DESCRIPTION | BY | CHK'D | DATE |
|---|---|---|---|---|
| 8 | | | | |
| 7 | | | | |
| 8 | | | | |
| 5 | | | | |
| 4 | | | | |
| 3 | | | | |
| 2 | | | | |
| 1 | | | | |
| | AS IN SERVICE | TWH | TWH | 4/08 |

REVISIONS

**ELGIN, JOLIET & EASTERN RAILWAY COMPANY**

XO1 CIRCUITS
HAWTHORNE LANE
WEST CHICAGO, ILLINOIS

ENGINEERING SERVICES
JOLIET, IL 60432
SCALE NONE

CHECKED BY TWH
IN CHARGE OF TWH

DRAWN BY TWH
DATE 3/1/07
CAD ID 26053BK-016.DWG

FILE NO. 26053BK | SHEET NO. 16 | CON'T ON 17

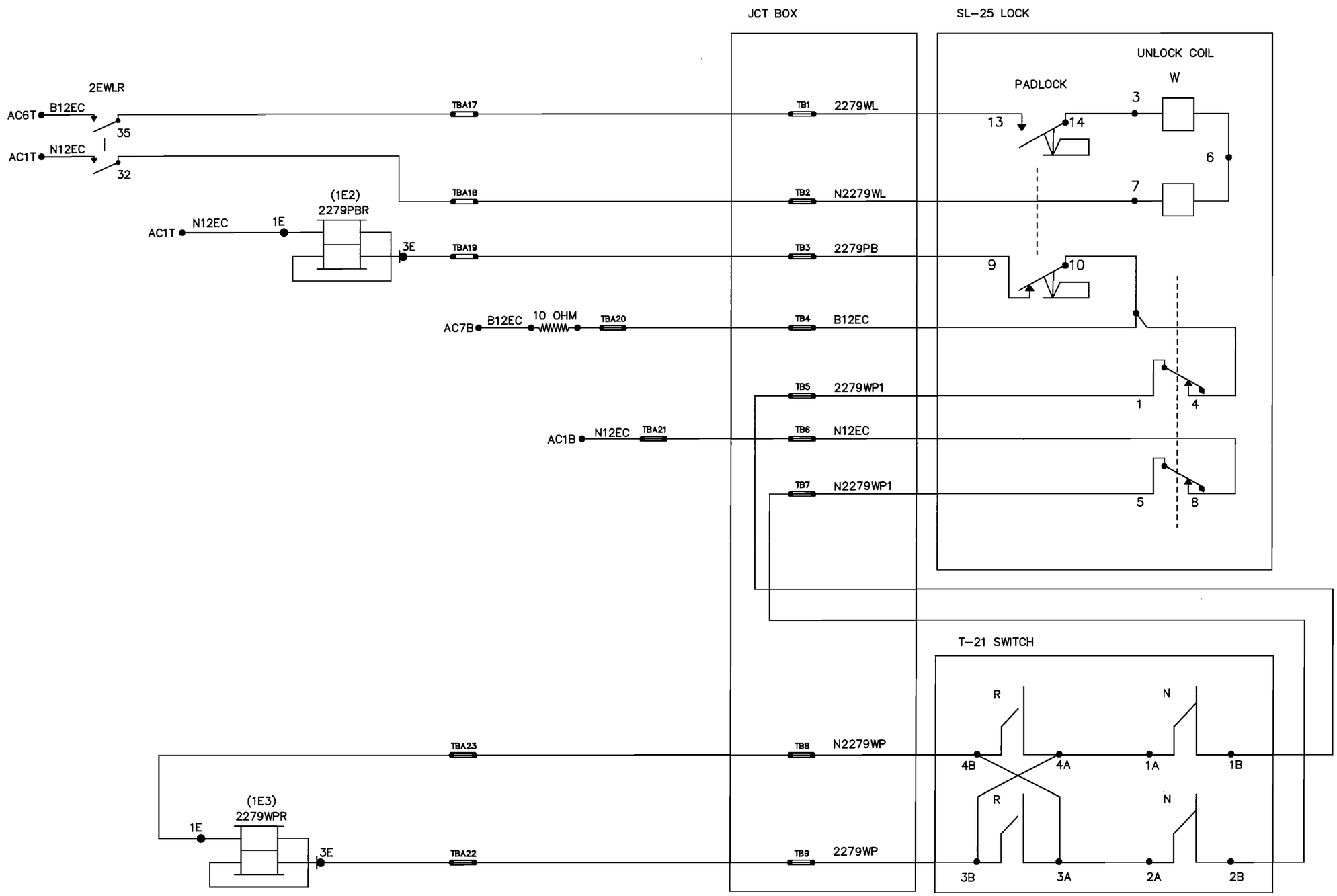


This drawing was created using CADD. All field and office changes are to be routed through Main Office in East Joliet. DO NOT make changes to this original copy without notifying the Engineer-Signals, Communications & Electrical.

| ND | DESCRIPTION | BY | CHK'D | DATE |
|---|---|---|---|---|
| 8 | | | | |
| 7 | | | | |
| 6 | | | | |
| 5 | | | | |
| 4 | | | | |
| 3 | | | | |
| 2 | | | | |
| 1 | | | | |
| | AS IN SERVICE | TWH | TWH | 4/08 |

REVISIONS

**ELGIN, JOLIET & EASTERN RAILWAY COMPANY**

2279WP CIRCUITS
HAWTHORNE LANE
WEST CHICAGO, ILLINOIS

ENGINEERING SERVICES
JOLIET, IL 60432
SCALE NONE

CHECKED BY TWH
IN CHARGE OF TWH

DRAWN BY TWH
DATE 3/1/07
CAD ID 260538K-017.DWG

FILE NO. 260538K | SHEET NO. 17 | CONT'D ON 18

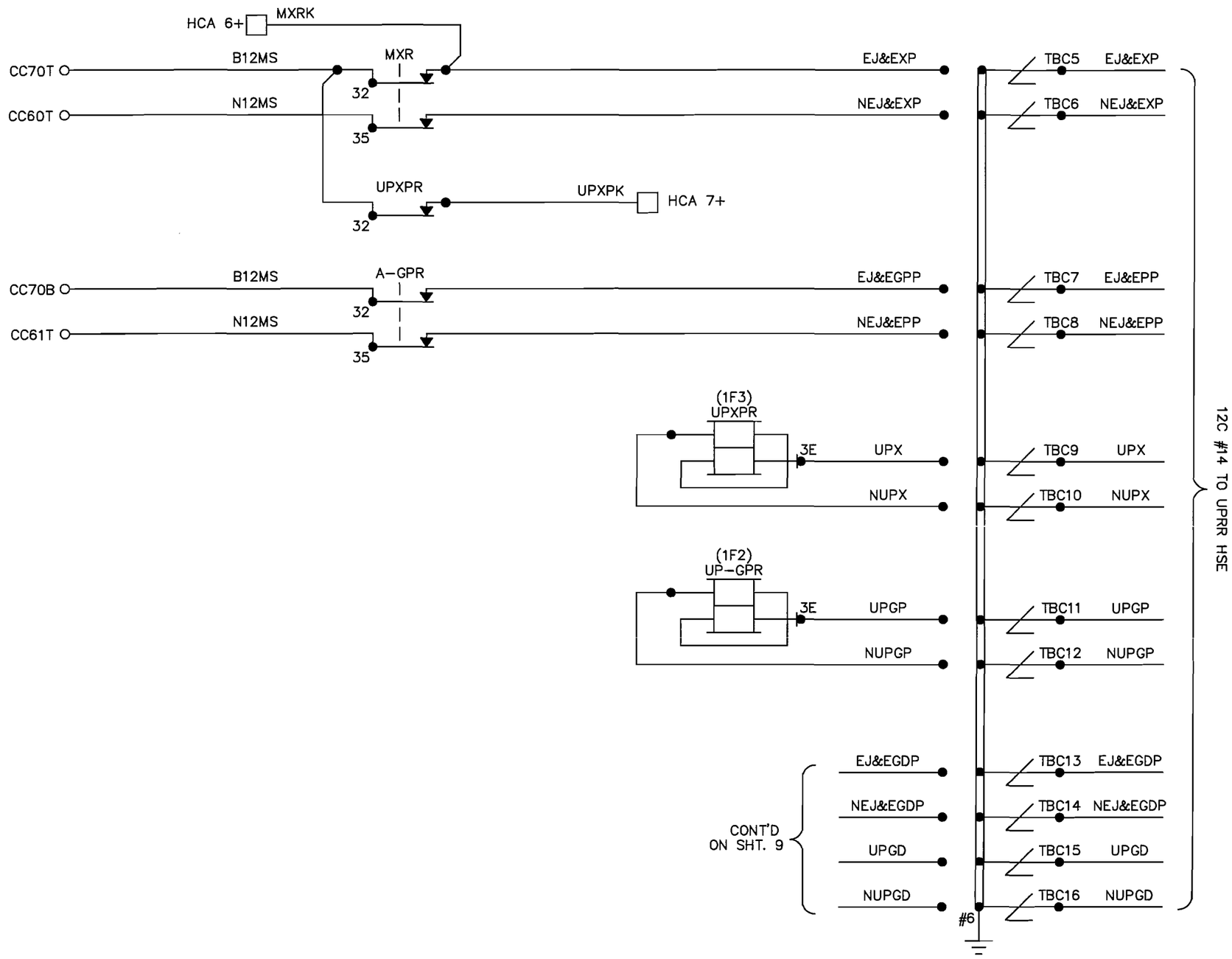


This drawing was created using CADD. All field and office changes are to be routed through Main Office in East Joliet. DO NOT make changes to this original copy without notifying the Engineer-Signals, Communications & Electrical.

| NO | DESCRIPTION | BY | CHK'D | DATE |
|---|---|---|---|---|
| 8 | | | | |
| 7 | | | | |
| 6 | | | | |
| 5 | | | | |
| 4 | | | | |
| 3 | | | | |
| 2 | | | | |
| 1 | | | | |
| | AS IN SERVICE | TWH | TWH | 4/08 |

REVISIONS

**ELGIN, JOLIET & EASTERN RAILWAY COMPANY**

UP INTERCONNECT CIRCUITS
HAWTHORNE LANE
WEST CHICAGO, ILLINOIS

ENGINEERING SERVICES
JOLIET, IL 60432
SCALE NONE

CHECKED BY TWH
IN CHARGE OF TWH

DRAWN BY TWH
DATE 3/1/07
CAD ID 260538K-018.DGN

FILE NO. 260538K | SHEET NO. 18 | CONT'D ON --