ELGIN, JOLIET & EASTERN RAILWAY COMPANY
HIGHWAY CROSSING WARNING SYSTEM

ENGLESBEE ROAD
MINOOKA, ILLINOIS

RECEIVED
MAR 20 2008
Illinois Commerce Commission
RAIL SAFETY SECTION

DOT 261014C
EJ&E MP 19.23

This drawing was created using CADD. All field and office changes are to be routed through Main Office in East Joliet. DO NOT make changes to this original copy without notifying the Engineer-Signals, Communications & Electrical

NO	DESCRIPTION	BY	CHK'D	DATE
8				
7				
6				
5				
4				
3				
2				
1				
	AS IN SERVICE	TWH	TWH	XX/XX

REVISIONS

ELGIN, JOLIET & EASTERN RAILWAY COMPANY

HIGHWAY CROSSING WARNING SYSTEM
ENGLESBEE ROAD
MINOOKA, ILLINOIS

ENGINEERING SERVICES
JOLIET, IL 60432
SCALE NONE

CHECKED BY TWH
IN CHARGE OF TWH

DRAWN BY TWH
DATE 2/16/07
CAD ID 261014C-COV.DWG

FILE NO. 261014C | SHEET NO. COVER | CONT'D ON 0

DESCRIPTION	SHEET NO.	DWG. NO.
COVER	COVER	261014C-COV
INDEX	0	261014C-000
CROSSING DETAIL & APPROACH CALCULATIONS	1	261014C-001
HXP WIRING	2	261014C-002
NOT USED	3	261014C-003
HXP SETUP SHEET	4	261014C-004
GATE & LAMP CONTROL WIRING	5	261014C-005
CABLE & ARRESTOR PANEL WIRING	6	261014C-006
CROSSING GATE WIRING	7	261014C-007
BATTERY BUS & RECTIFIER WIRING	8	261014C-008
HCA & LOD WIRING	9	261014C-009
RTU WIRING	9A	261014C-009A
HOUSE LAYOUT	10	261014C-010
EQUIPMENT RACK LAYOUT	11	261014C-011
AC POWER DISTRIBUTION	12	261014C-012
WALL "C" LAYOUT DETAIL	13	261014C-013

This drawing was created using CADD. All field and office changes are to be routed through Main Office in East Joliet. DO NOT make changes to this original copy without notifying the Engineer-Signals, Communications & Electrical.

NO	DESCRIPTION	BY	CHK'D	DATE
8				
7				
6				
5				
4				
3				
2				
1				
	AS IN SERVICE	TWH	TWH	XX/XX

REVISIONS

ELGIN, JOLIET & EASTERN RAILWAY COMPANY

SIGNAL PRINT INDEX
ENGLESBEE ROAD
MINOOKA, ILLINOIS

ENGINEERING SERVICES
JOLIET, IL 60432
SCALE NONE

CHECKED BY TWH
IN CHARGE OF TWH

DRAWN BY TWH
DATE 2/16/07
CAD ID 261014C-000.DWG

FILE NO. 261014C

SHEET NO. 0

CONT'D ON 1

HOUSE CABLE ASSIGNMENTS	
DEVICE	CABLE(S)
GATE A	2–7C #6
GATE B	2–7C #6
T1–1, T2–1	2C #6 TW
R1–1, R2–1	2C #6 TW
AC POWER	3C #2

GUIDELINES FOR CROSSING WARNING TIME AND APPROACH DISTANCE CALCULATIONS	
MAX SPEED IN MPH	25
CT IN SECONDS	0
BUFFER TIME IN SECONDS	5
TOTAL WARNING TIME IN SECONDS	25
ERT IN SECONDS	8
APT IN SECONDS	0
TOTAL APPROACH TIME IN SECONDS	33
APPROACH DISTANCE IN FEET	1213
SPEED IN FPS	37
CLEARANCE TIME CALCULATION	
LONGEST DISTANCE IN FEET (35 FEET MINIMUM)	--
CT IN SECONDS	--

APT – ADVANCED PRE–EMPTION
ERT – EQUIPMENT RESPONSE TIME
CT – CLEARANCE TIME

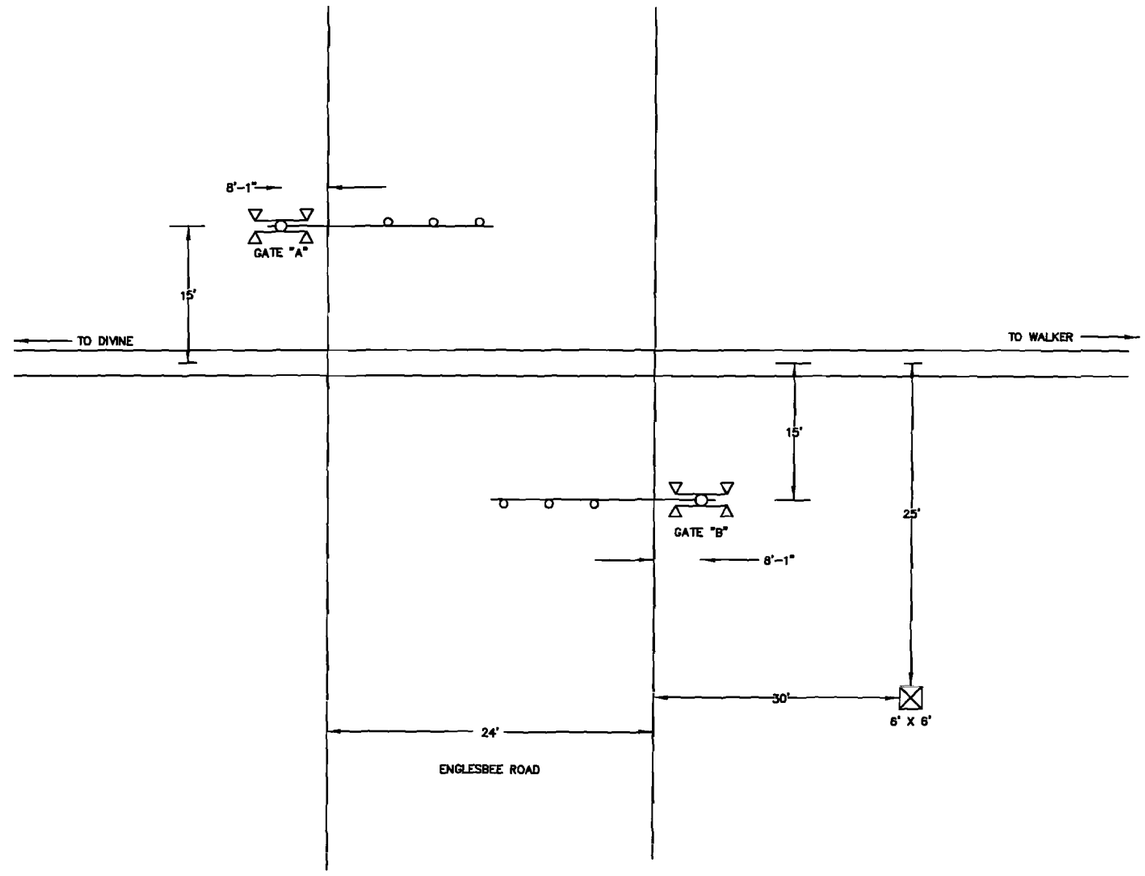

DOT: 261014C	EJ&E MP 19.23	
EQUIPMENT	QUADRANT	
	NW	SE
FLS	–	–
GATE (MODEL)	US&S 95	US&S 95
GATE (FT')	16	16
CANTILEVER (FT')	–	–
ADDITIONAL LIGHTS	–	–
BELL	X	X
X BUCKS	X	X
MULTIPLE TRACK SIGNS	–	–

THE J

This drawing was created using CADD. All field and office changes are to be routed through Main Office in East Joliet. DO NOT make changes to this original copy without notifying the Engineer–Signals, Communications & Electrical

NO	DESCRIPTION	BY	CHK'D	DATE
8				
7				
6				
5				
4				
3				
2				
1				
	AS IN SERVICE	TVH	TVH	XX/XX

REVISIONS

ELGIN, JOLIET & EASTERN RAILWAY COMPANY

CROSSING DETAIL & CALCULATIONS
ENGLESBEE ROAD
MINOOKA, ILLINOIS

ENGINEERING SERVICES
JOLIET, IL 60432
SCALE NONE

CHECKED BY TVH
IN CHARGE OF TVH

DRAWN BY TVH
DATE 2/16/07
CAD ID P61014C-081.DWG

FILE NO. 261014C | SHEET NO. 1 | CONT'D ON 2

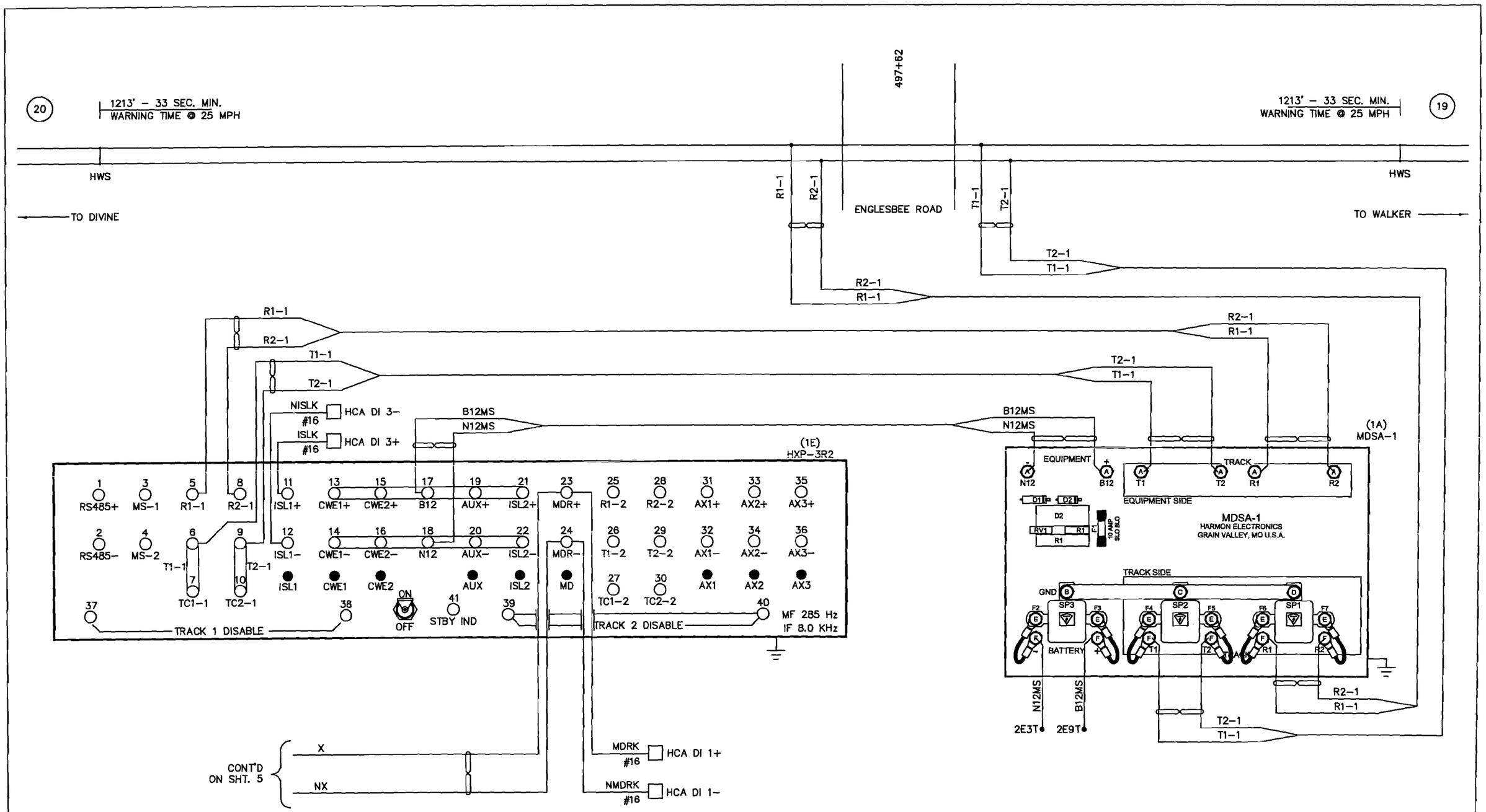

= TWIST TWO TURNS PER FOOT.

NOTES: 1. ALL WIRING THIS PAGE TO BE #10 AWG UNLESS OTHERWISE NOTED.

This drawing was created using CADD. All field and office changes are to be routed through Main Office in East Joliet. DO NOT make changes to this original copy without notifying the Engineer–Signals, Communications & Electrical.

NO	DESCRIPTION	BY	CHK'D	DATE
8				
7				
6				
5				
4				
3				
2				
1				
	AS IN SERVICE	TWH	TVH	XX/03

REVISIONS

ELGIN, JOLIET & EASTERN RAILWAY COMPANY

HXP WIRING
ENGLESBEE ROAD
MINOOKA, ILLINOIS

ENGINEERING SERVICES
JOLIET, IL 60432
SCALE NONE

CHECKED BY TVH
IN CHARGE OF TVH

DRAWN BY TVH
DATE 8/16/07
CAD ID 261014C-002.DWG

FILE NO. 261014C
SHEET NO. 2
CONT'D ON 3

Grade Crossing Location Record

Cabinet Number (Option 90) XXXX

Location ENGLESBEE ROAD Milepost 19.23 DOT 261 014C Date XX / XX / 07

Operating Program HPN _____ Version 35.0

System Monitor Program HPN _____ Version 20.2

Hardware Settings

Track 1 Master ☒ Slave ☐ 4 kHz ☐ 8 kHz ☒

LOS jumper 0 ☐ 1 ☒ 2 ☐ Fault jumper 0 ☒ 1 ☐

Approach configuration switch position: Normal ☒ Short ☐ Very Short ☐

Track 2 Master ☐ Slave ☐ 4 kHz ☐ 8 kHz ☐

LOS jumper 0 ☐ 1 ☐ 2 ☐ Fault jumper 0 ☐ 1 ☐

Approach configuration switch position: Normal ☐ Short ☐ Very Short ☐

Adjust Select Adjustments

No.	Adjustment	Default	Range	Track 1	Track 2
1	Approach Length	9,999	0 - 9,999	1213 feet	feet
2	Warning Time	99	23 - 99	25 seconds	seconds
3	LIA	0	-9 to +9	0 steps	steps
4	TC (1 step = 32)	395	430 - 470	2 steps	steps
5	MD Restart	99%	0 - 99%	0 RX	RX

Option Adjustments

No.	Adjustment	Default	Range	Track 1	Track 2
0	RX	0	1-100		
1	TK-ENA	UP	UP or dn	UP ☒ dn ☐	UP ☐ dn ☒
2	TK FO	0	0 - 9999	430 Hz	Hz
3	CW/MD	d	C to d	C ☒ d ☐	C ☐ d ☐
4	UNI-BI	b	U - b	U ☐ b ☒	U ☐ b ☐
5	NBS-C	0	0 - 99	100	RX
		9,999	RX dependant	1213	feet
6	CWEWT	80	0 - 99	80	seconds
7	LOS	16	4 - 99	16	seconds
8	IJ-LOS	5	3 - 99	5	seconds
9	BC	frequency dependant	50 -250	145	
10	P-COMP	0	0 - 10	0	degrees

HXP-3, HXP-3R, HXP-3R2

AX Adjustment Options

NOTE: NO AX DRIVE IS USED AT THIS LOCATION

	Default	Range	Option 11 - AX1	Option 12 - AX2	Option 13 - AX3
TK-ASN		1, 2, Both	1 ☐ 2 ☐ Both ☐	1 ☐ 2 ☐ Both ☐	1 ☐ 2 ☐ Both ☐
OF-TK1	0	0 - 9,999	feet	feet	feet
OF-TK2	0	0 - 9,999	feet	feet	feet
WT	99	23 - 99	seconds	seconds	seconds
MD-RST	99	0 - 99%	RX	RX	RX
CW/MD	d	C or d	C ☐ d ☐	C ☐ d ☐	C ☐ d ☐
CJ-LOS	0	3 - 99	seconds	seconds	seconds
PJ-DET	15	4 - 15	seconds	seconds	seconds
POS-ST	dn	UP or dn	UP ☐ dn ☐	UP ☐ dn ☐	UP ☐ dn ☐

No.	Adjustment	Default	Range	Track 1	Track 2
17	MDR-AX	n*	n or A	n ☒ A ☐	n ☐ A ☐
	OF-TK1	0	0 - 9,999	feet	
	OF-TK2	0	0 - 9,999		feet
	CJ-LOS	0	3 - 99	seconds	seconds
	PJ-DET	15	4 - 15	seconds	seconds
18	MD-TMR	10	10-99 (0=disable)	10 minutes	minutes
19	MIN-WT	0	23-99 (0=disable)	0 seconds	seconds
20	FS-DET	0	10-30 (0=disable)	0 minutes	minutes
21	POS-RX	0	0 - 74 (0=disable)	0 RX	RX
	POS-TM	0	0 - 99**	0 minutes	minutes
22	AR-TMR	0	0-80 (0=disable)	0 minutes	minutes
47	ATO-RX	dn	UP or dn	UP ☐ dn ☒	UP ☐ dn ☐
48	PF-ENA	UP	UP or dn	UP ☒ dn ☐	UP ☐ dn ☐

***n = not an AX drive (no options available)**

****0 = disable, 99 = continuous**

Shunt Record

West Approach		No Shunt RX	No Shunt Phase	100% Shunt RX	100% Shunt Phase		50% Shunt RX	50% Shunt Phase	LIA Added ±1 to 9
Track 1	Normal								
	Standby								
Track 2	Normal								
	Standby								
East Approach									
Track 1	Normal	XX	XX	XX			XX		XX
	Standby								
Track 2	Normal								
	Standby								

This drawing was created using CADD. All field and office changes are to be routed through Main Office in East Joliet. DO NOT make changes to this original copy without notifying the Engineer-Signals, Communications & Electrical

NO	DESCRIPTION	BY	CHK'D	DATE
8				
7				
6				
5				
4				
3				
2				
1				
	AS IN SERVICE	TVH	TVH	XX/XX

REVISIONS

ELGIN, JOLIET & EASTERN RAILWAY COMPANY

HXP SETUP SHEET
ENGLESBEE ROAD
MINOOKA, ILLINOIS

ENGINEERING SERVICES
JOLIET, IL 60432
SCALE NONE

CHECKED BY TVH
IN CHARGE OF TVH

DRAWN BY TVH
DATE 2/16/07
CAD ID 261014C-004.DWG

FILE NO. 261014C | SHEET NO. 4 | CONT'D ON 5

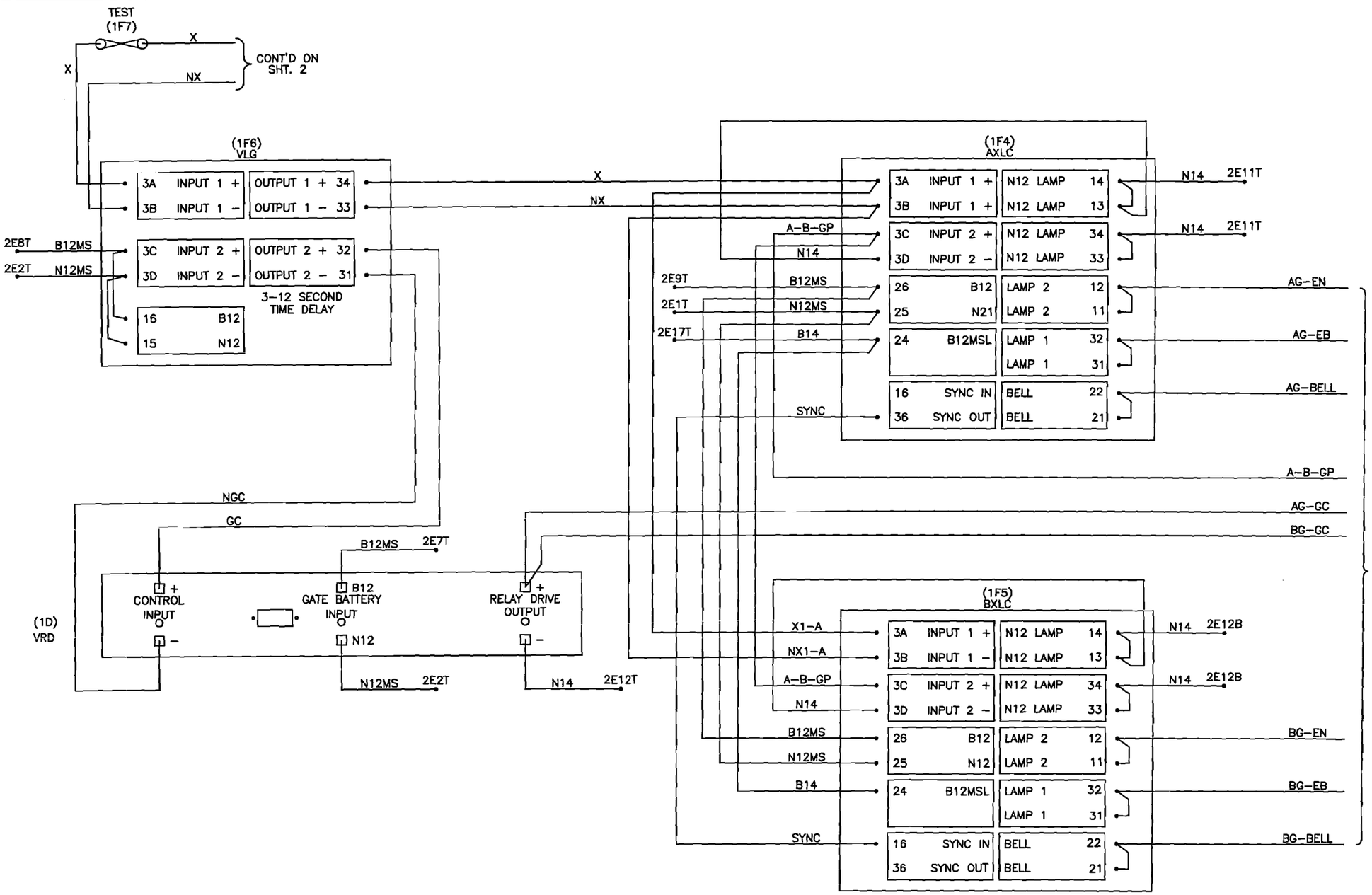

NOTES:
1. ALL WIRING THIS SHEET TO BE #10 UNLESS OTHERWISE SHOWN.
2. BEFORE PLACING IN SERVICE, VERIFY VLG IS SET FOR 3 SECOND DELAY

This drawing was created using CADD. All field and office changes are to be routed through Main Office in East Joliet. DO NOT make changes to this original copy without notifying the Engineer-Signals, Communications & Electrical.

NO	DESCRIPTION	BY	CHK'D	DATE
8				
7				
6				
5				
4				
3				
2				
1				
	AS IN SERVICE	TVH	TVH	XX/XX

REVISIONS

ELGIN, JOLIET & EASTERN RAILWAY COMPANY

LOGIC GATE & LAMP CONTROL WIRING
ENGLESBEE ROAD
MINOOKA, ILLINOIS

ENGINEERING SERVICES
JOLIET, IL 60432
SCALE NONE

CHECKED BY TVH
IN CHARGE OF TVH

DRAWN BY TVH
DATE 8/16/07
CAD ID 261014C-005.DWG

FILE NO. 261014C | SHEET NO. 5 | CONT'D ON 6

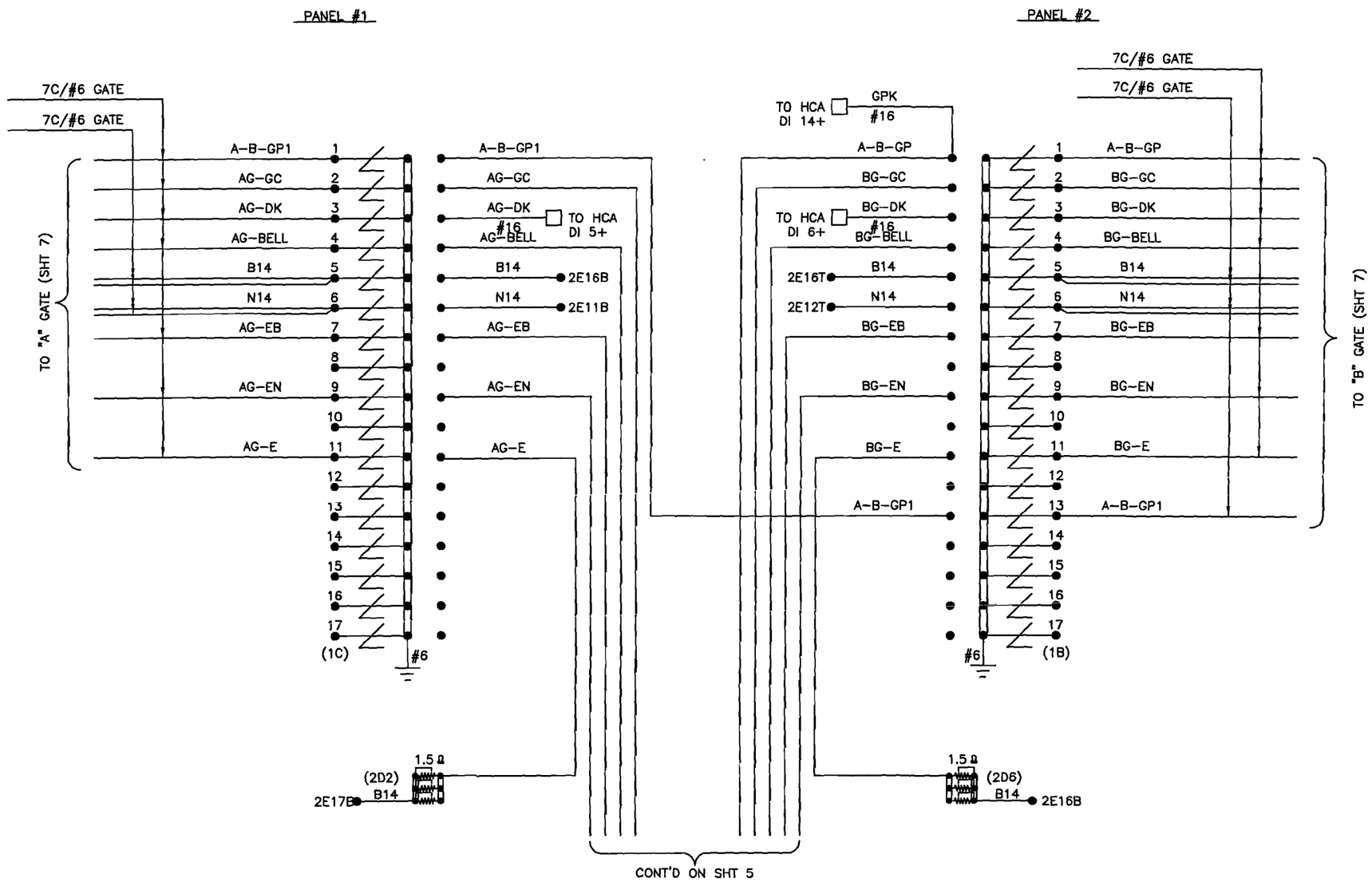

NOTES:

1. ALL WIRING THIS SHEET TO BE #10 UNLESS OTHERWISE SHOWN.
2. ADJUST ALL RESISTORS EVENLY.

This drawing was created using CADD. All field and office changes are to be routed through Main Office in East Joliet. DO NOT make changes to this original copy without notifying the Engineer-Signals, Communications & Electrical

NO	DESCRIPTION	BY	CHK'D	DATE
8				
7				
6				
5				
4				
3				
2				
1				
	AS IN SERVICE	TWH	TWH	XX/XX

REVISIONS

ELGIN, JOLIET & EASTERN RAILWAY COMPANY

CABLE & ARRESTOR PANEL WIRING
ENGLESBEE ROAD
MINOOKA, ILLINOIS

ENGINEERING SERVICES
JOLIET, IL 60432
SCALE NONE

CHECKED BY TWH
IN CHARGE OF TWH

DRAWN BY TWH
DATE 2/16/07
CAD ID 261014C-006.DWG

FILE NO. 261014C

SHEET NO. 6

CONT'D ON 7

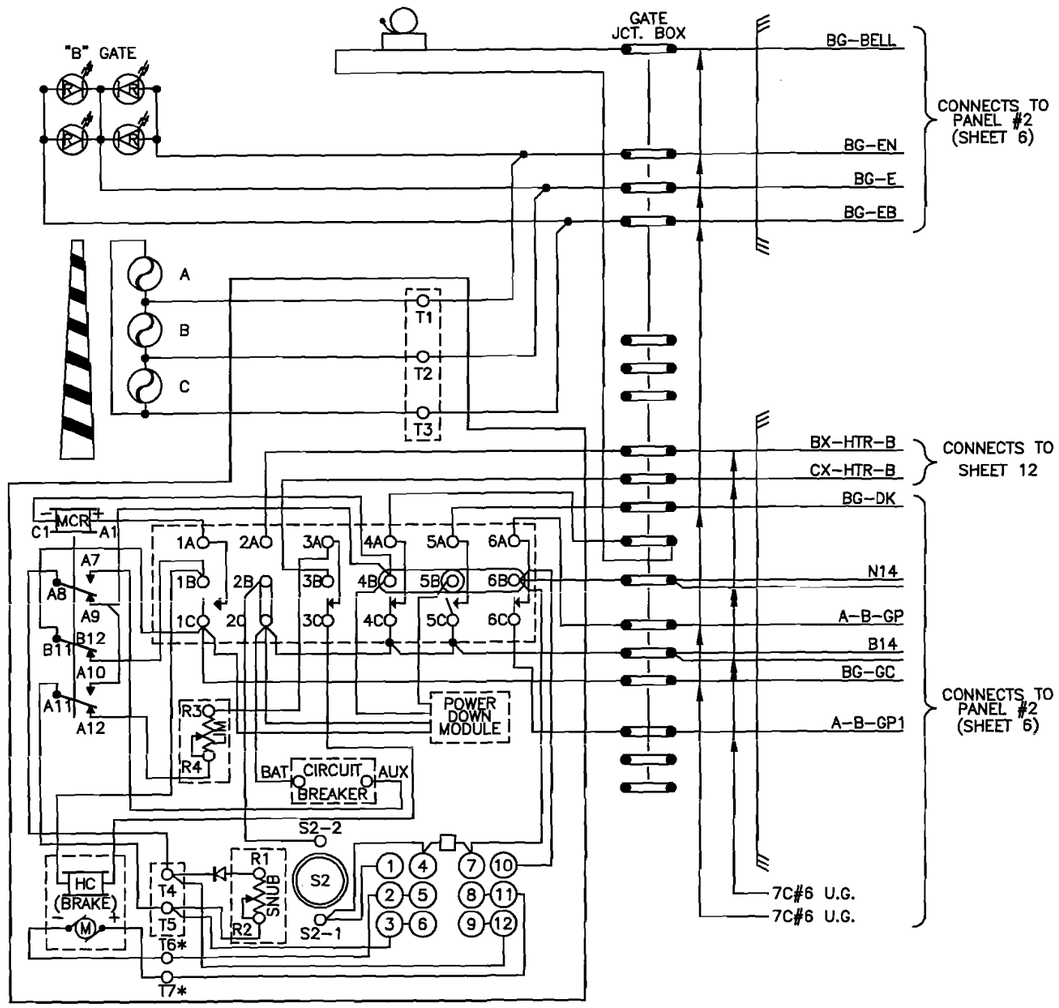

US & S MODEL 95 GATE MECHANISM

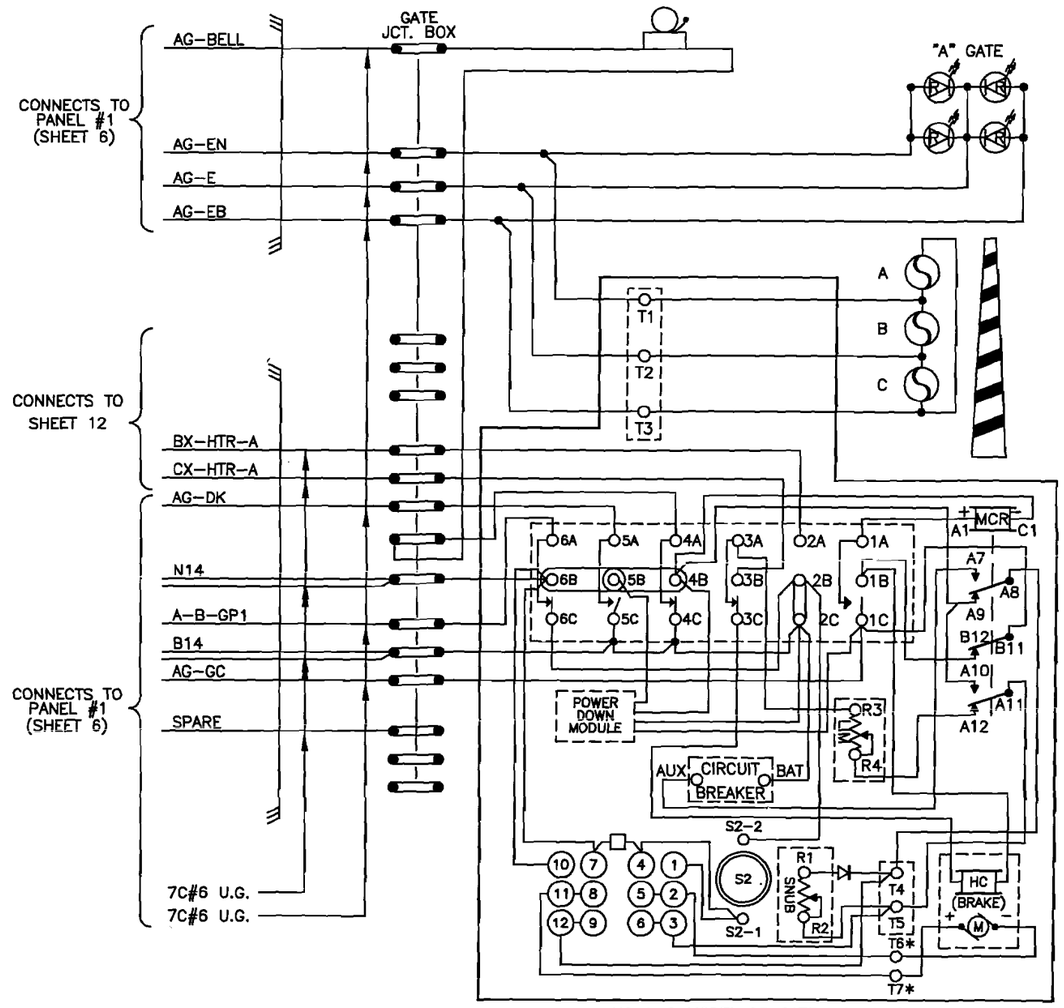

US & S MODEL 95 GATE MECHANISM

(SHOWN WITH MECHANISM IN VERTICAL POS.)

CONTACT	CLOSED	FUNCTION
1	0°–89°	MOTOR UP
2		VACANT SLOT
3	45°–90°	MOTOR DN
4	5°–90°	BELL
5	0° – 5°	GATE DN IND
6	83°–90°	FLASH'G LIGHT

NOTES:

1. JUMPERS MUST BE ADDED TO EACH GATE AS SHOWN.
2. GROUND WIRE OF CABLE SHALL BE GROUNDED AT EACH GATE.
3. ALL LIGHT WIRES THIS PAGE ARE TO BE #10 AWG.
4. GATE 'A' B14 & N14 DOUBLED UP TO PREVENT VOLTAGE DROP

This drawing was created using CADD. All field and office changes are to be routed through Main Office in East Joliet DO NOT make changes to this original copy without notifying the Engineer-Signals, Communications & Electrical.

NO	DESCRIPTION	BY	CHK'D	DATE
8				
7				
6				
5				
4				
3				
2				
1				
	AS IN SERVICE	TWH	TWH	XX/XX

REVISIONS

ELGIN, JOLIET & EASTERN RAILWAY COMPANY

CROSSING GATE WIRING
ENGLESBEE ROAD
MINOOKA, ILLINOIS

ENGINEERING SERVICES
JOLIET, IL 60432
SCALE NONE

CHECKED BY TWH
IN CHARGE OF TWH

DRAWN BY TWH
DATE 2/16/07
CAD ID 261014C-007.DWG

FILE NO. 261014C | SHEET NO. 7 | CONT'D ON 8

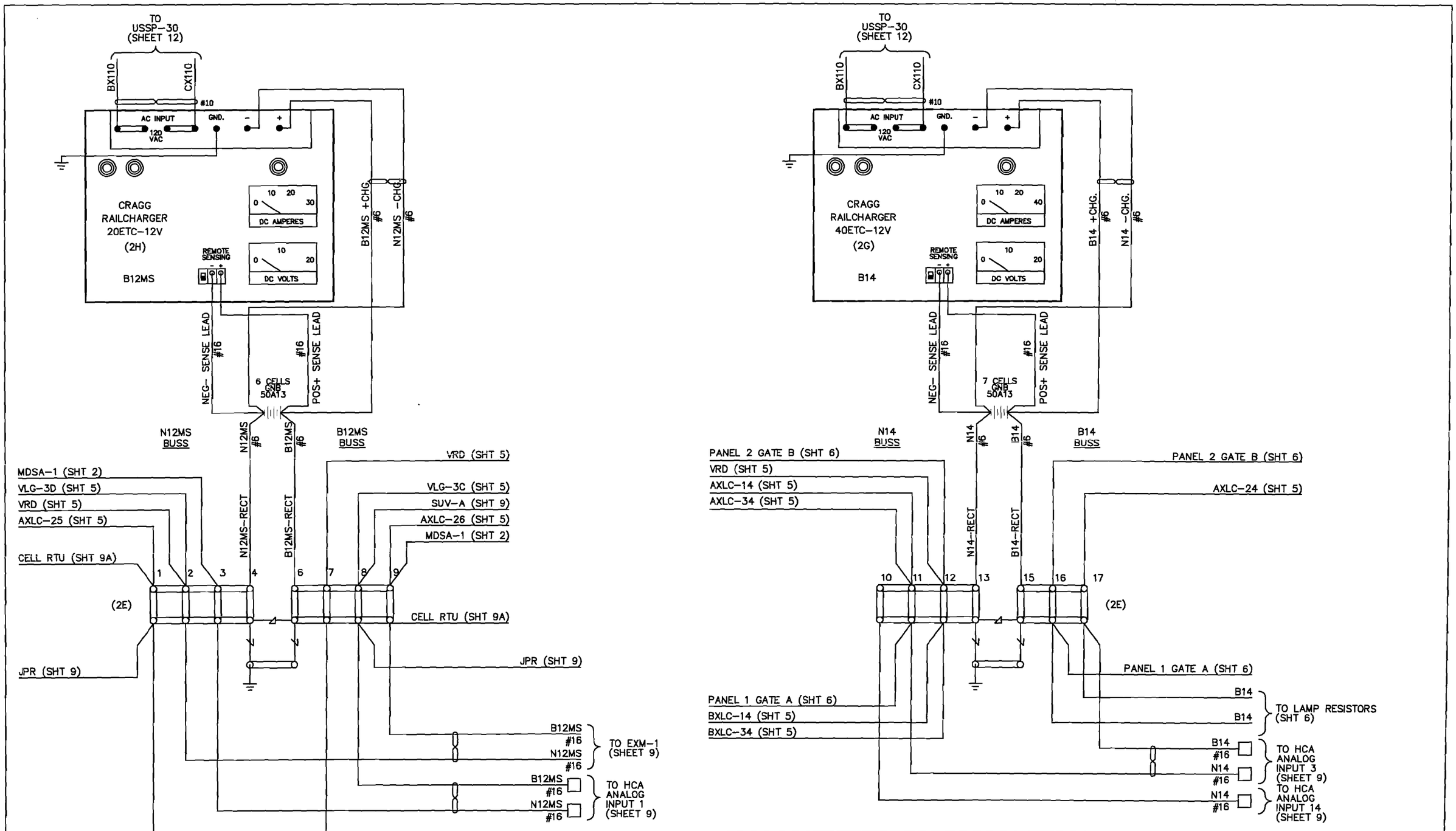

NOTE: ALL WIRING THIS SHEET TO BE #10AWG UNLESS OTHERWISE NOTED.

= TWIST TWO TURNS PER FOOT.

This drawing was created using CADD. All field and office changes are to be routed through Main Office in East Joliet. DO NOT make changes to this original copy without notifying the Engineer-Signals, Communications & Electrical

NO	DESCRIPTION	BY	CHK'D	DATE
8				
7				
6				
5				
4				
3				
2				
1				
	AS IN SERVICE	TWH	TWH	XX/XX/XX

REVISIONS

ELGIN, JOLIET & EASTERN RAILWAY COMPANY

BATTERY BUS & RECTIFIER WIRING
ENGLESBEE ROAD
MINOOKA, ILLINOIS

ENGINEERING SERVICES
JOLIET, IL 60432
SCALE NONE

CHECKED BY TWH
IN CHARGE OF TWH

DRAWN BY TWH
DATE 2/16/07
CAD ID 261014C-008.DWG

FILE NO. 261014C
SHEET NO. 8
CONT'D ON 9

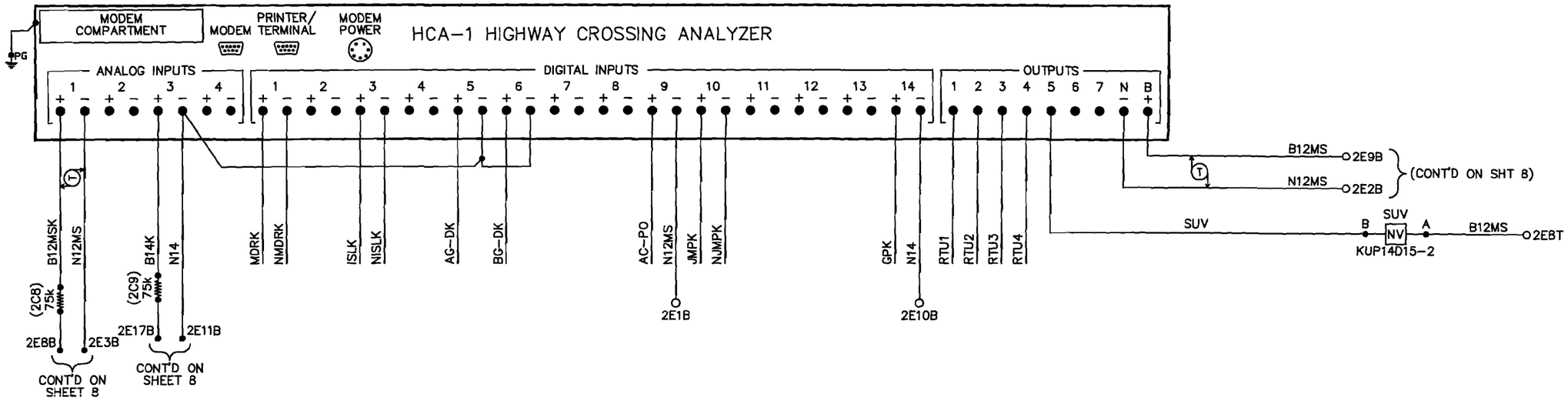

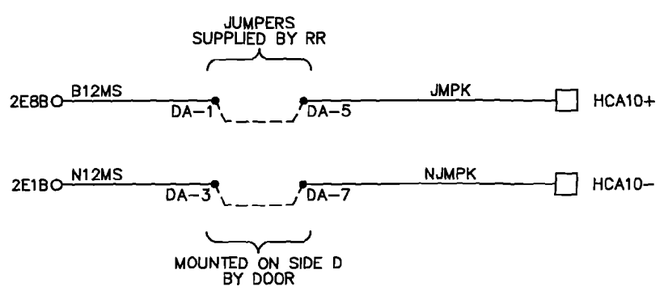

NOTES:

1. ALL WIRING ON THIS SHEET TO BE #16 UNLESS OTHERWISE NOTED.

This drawing was created using CADD. All field and office changes are to be routed through Main Office in East Joliet. DO NOT make changes to this original copy without notifying the Engineer-Signals, Communications & Electrical.

NO	DESCRIPTION	BY	CHK'D	DATE
8				
7				
6				
5				
4				
3				
2				
1				
	AS IN SERVICE	TVH	TVH	XX/XX

REVISIONS

ELGIN, JOLIET & EASTERN RAILWAY COMPANY

HCA WIRING
ENGLESBEE ROAD
MINOOKA, ILLINOIS

ENGINEERING SERVICES
JOLIET, IL 60432
SCALE NONE

CHECKED BY TVH
IN CHARGE OF TVH

DRAWN BY TVH
DATE 2/16/07
CAD ID R261014C-009.DWG

FILE NO. 261014C
SHEET NO. 9
CONT'D ON 10

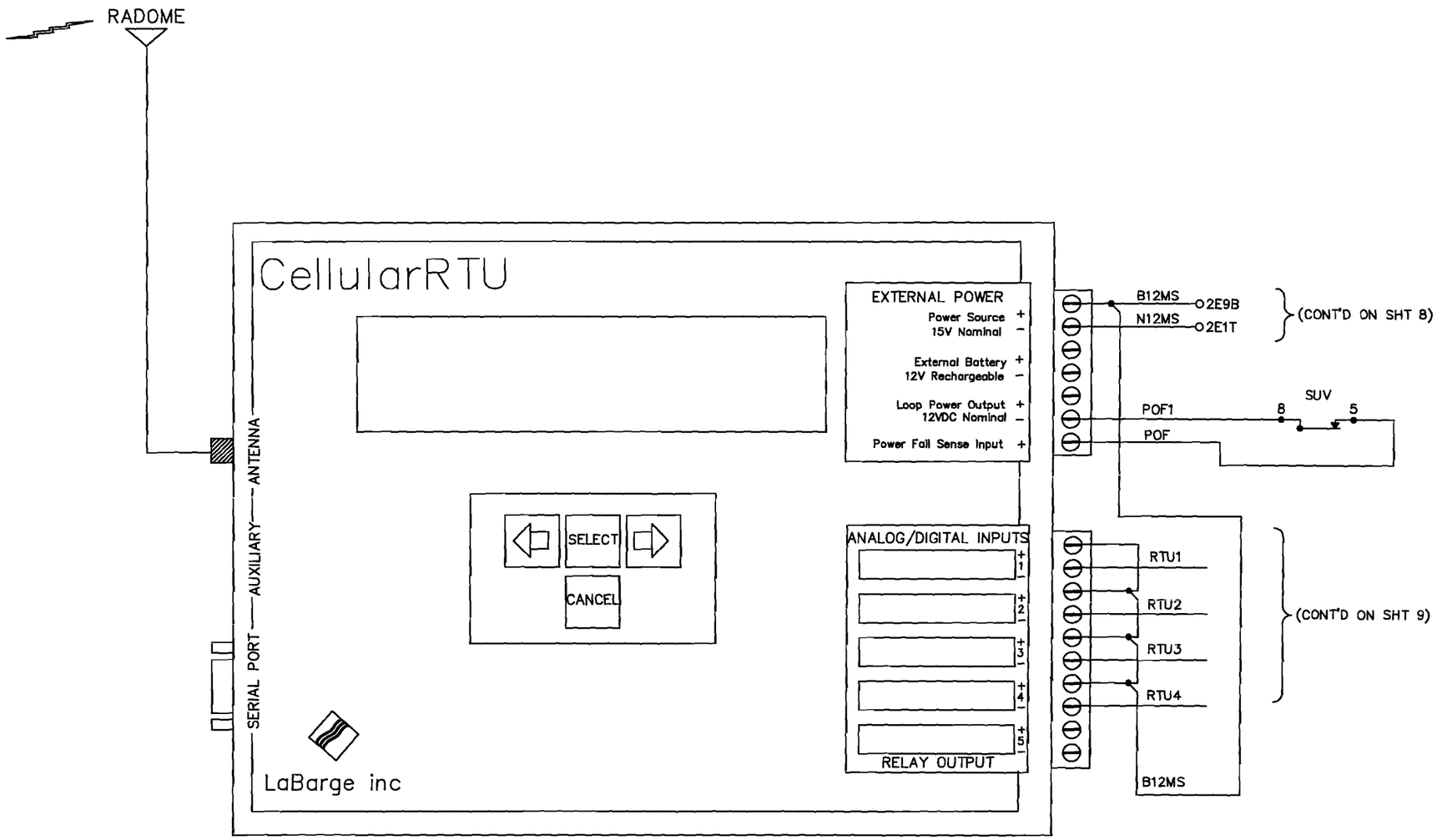

SUV
CONTACT CONFIGURATION
POTTER & BRUMFIELD RELAY

HEEL	9	8	7
FRONT	6	5	4
BACK	3	2	1

THE J

This drawing was created using CADD. All field and office changes are to be routed through Main Office in East Joliet. DO NOT make changes to this original copy without notifying the Engineer-Signals, Communications & Electrical

NO	DESCRIPTION	BY	CHK'D	DATE
8				
7				
6				
5				
4				
3				
2				
1				
	AS IN SERVICE	TWH	TWH	XX/XX

REVISIONS

ELGIN, JOLIET & EASTERN RAILWAY COMPANY

RTU WIRING
ENGLESBEE ROAD
MINOOKA, ILLINOIS

ENGINEERING SERVICES
JOLIET, IL 60432
SCALE NONE

CHECKED BY TWH
IN CHARGE OF TWH

DRAWN BY TWH
DATE 2/16/07
CAD ID [illegible]

FILE NO. 261014C
SHEET NO. 9A
CONT'D ON 10

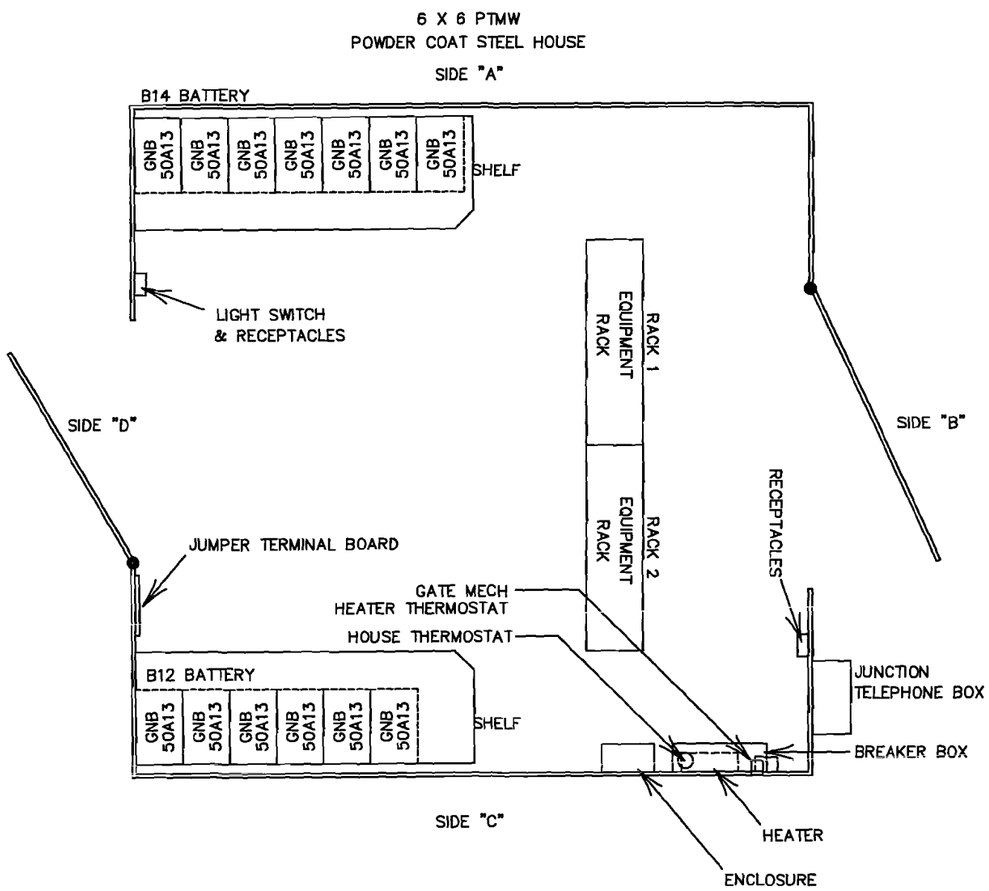

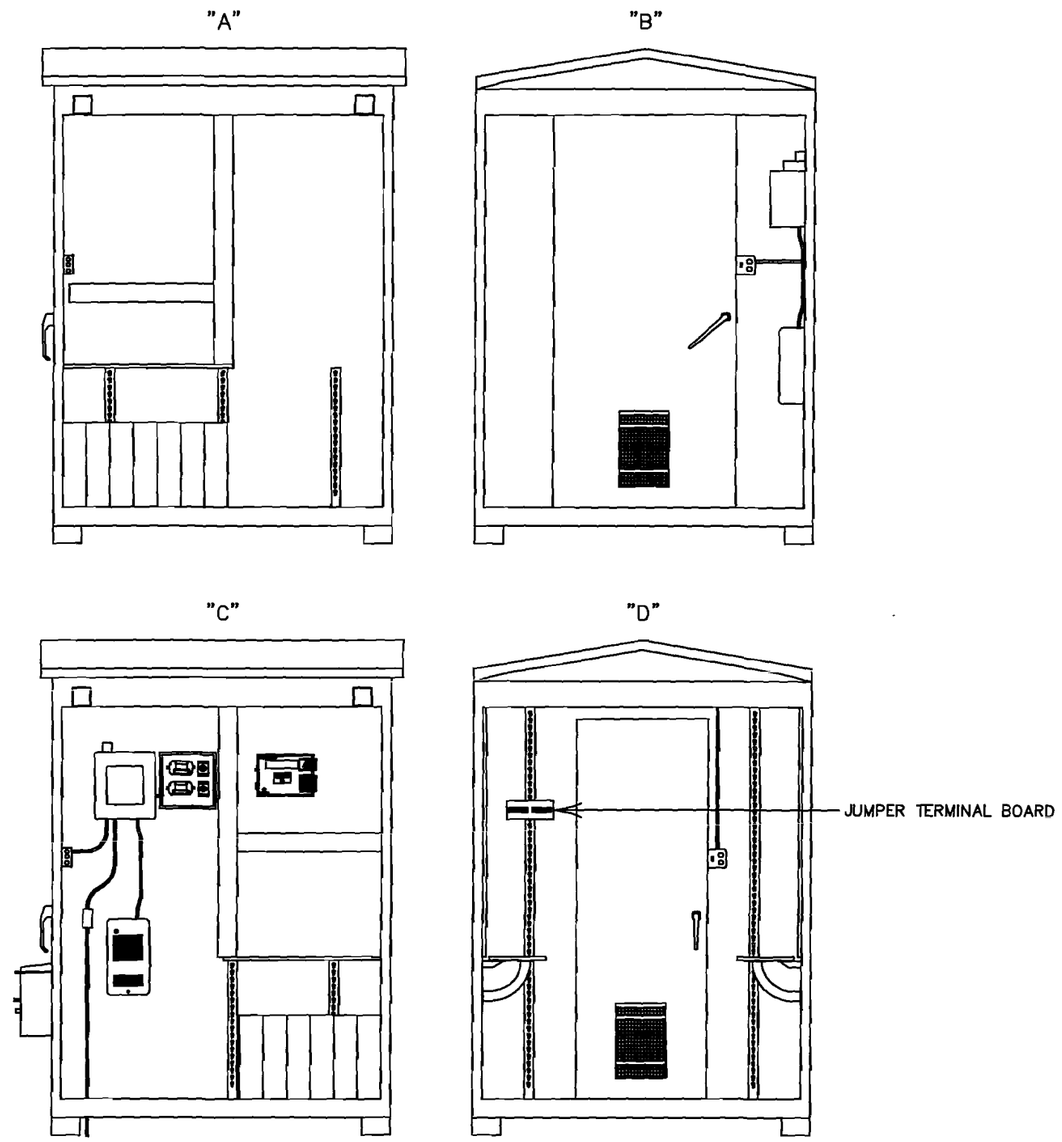

This drawing was created using CADD. All field and office changes are to be routed through Main Office in East Joliet. DO NOT make changes to this original copy without notifying the Engineer-Signals, Communications & Electrical

NO	DESCRIPTION	BY	CHK'D	DATE
8				
7				
6				
5				
4				
3				
2				
1				
	AS IN SERVICE	TWH	TWH	XX/XX

REVISIONS

ELGIN, JOLIET & EASTERN RAILWAY COMPANY

HOUSE LAYOUT
ENGLESBEE ROAD
MINOOKA, ILLINOIS

ENGINEERING SERVICES
JOLIET, IL 60432
SCALE NONE

CHECKED BY TWH
IN CHARGE OF TWH

DRAWN BY TWH
DATE 8/16/07
CAD ID P261014C-010.DWG

FILE NO. 261014C

SHEET NO. 10

CONT'D ON 11

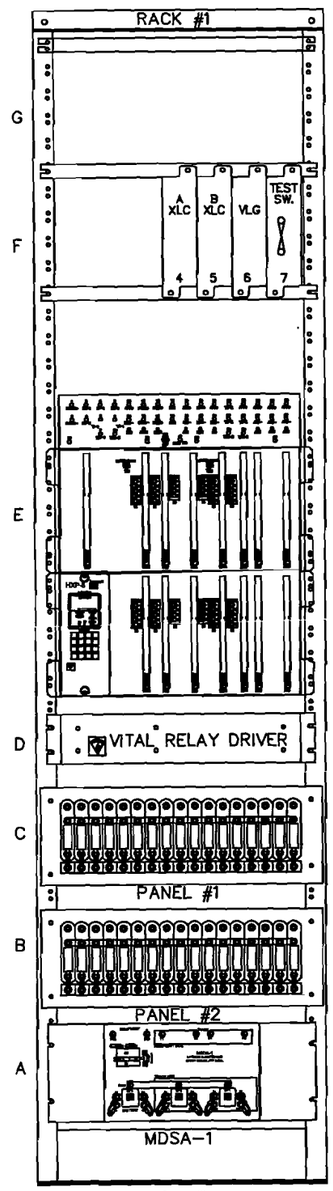

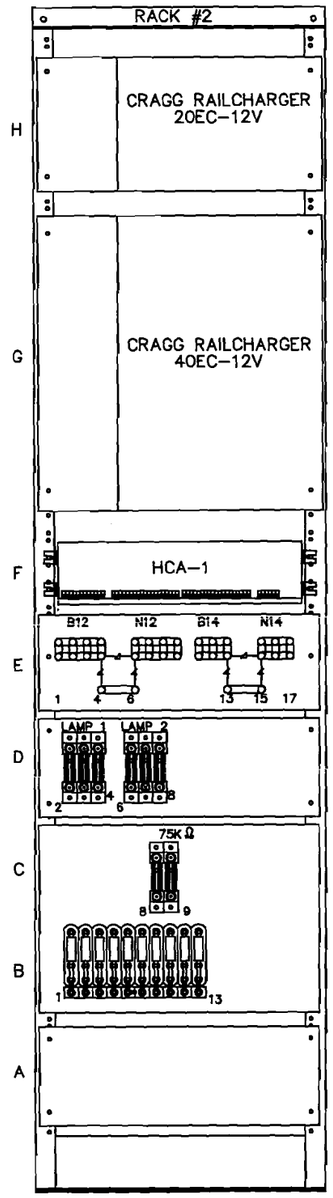

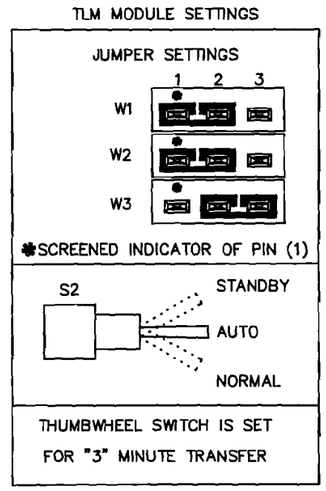

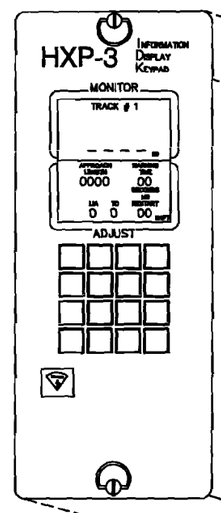

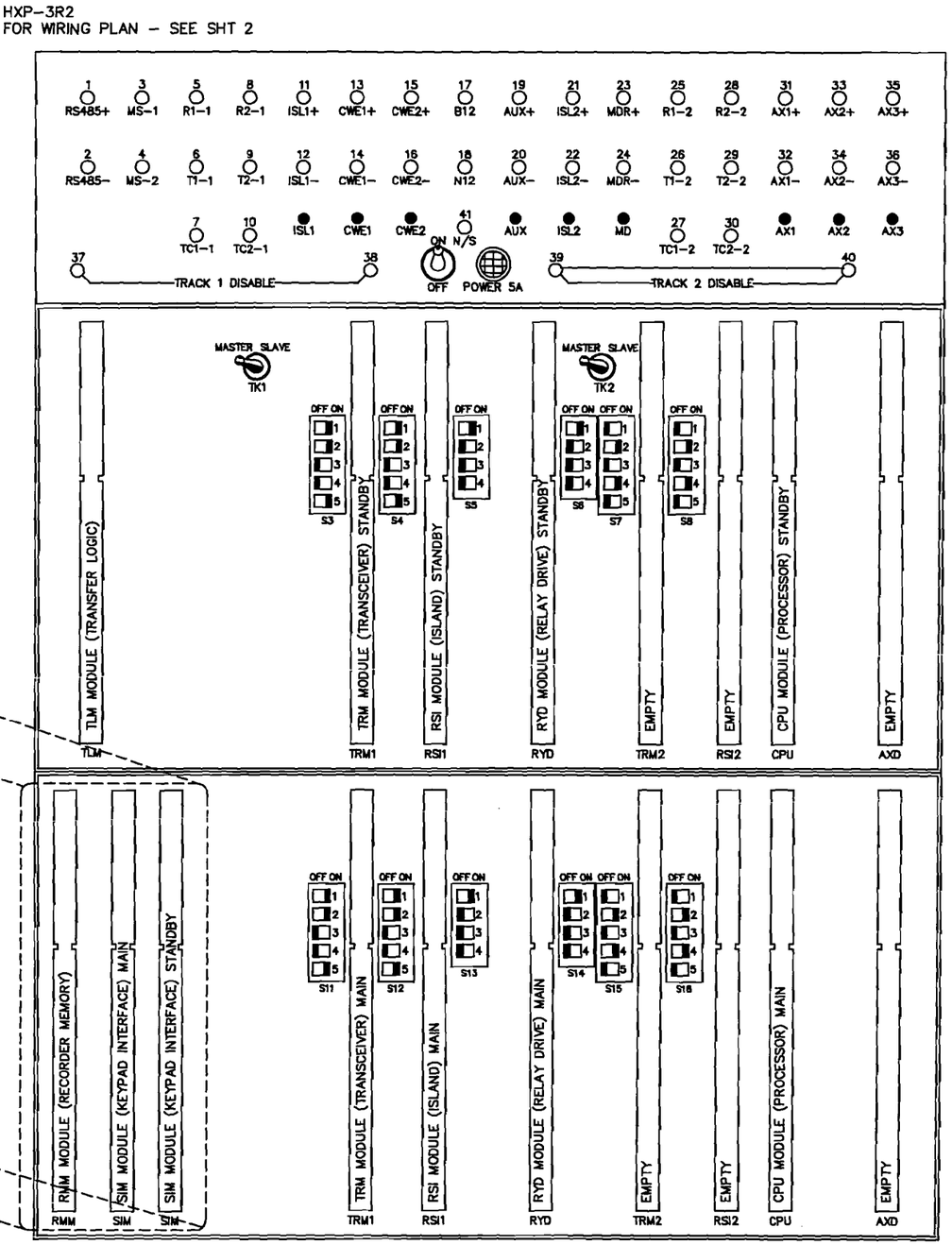

This drawing was created using CADD. All field and office changes are to be routed through Main Office in East Joliet. DO NOT make changes to this original copy without notifying the Engineer-Signals, Communications & Electrical

NO	DESCRIPTION	BY	CHK'D	DATE
8				
7				
6				
5				
4				
3				
2				
1				
	AS IN SERVICE	TWH	TWH	XX/XX

REVISIONS

ELGIN, JOLIET & EASTERN RAILWAY COMPANY

EQUIPMENT RACK LAYOUT
ENGLESBEE ROAD
MINOOKA, ILLINOIS

ENGINEERING SERVICES
JOLIET, IL 60432
SCALE NONE

CHECKED BY TWH
IN CHARGE OF TWH

DRAWN BY TWH
DATE 2/16/07
CAD ID 261014C-01.DWG

FILE NO. 261014C | SHEET NO. 11 | CONT'D ON 12

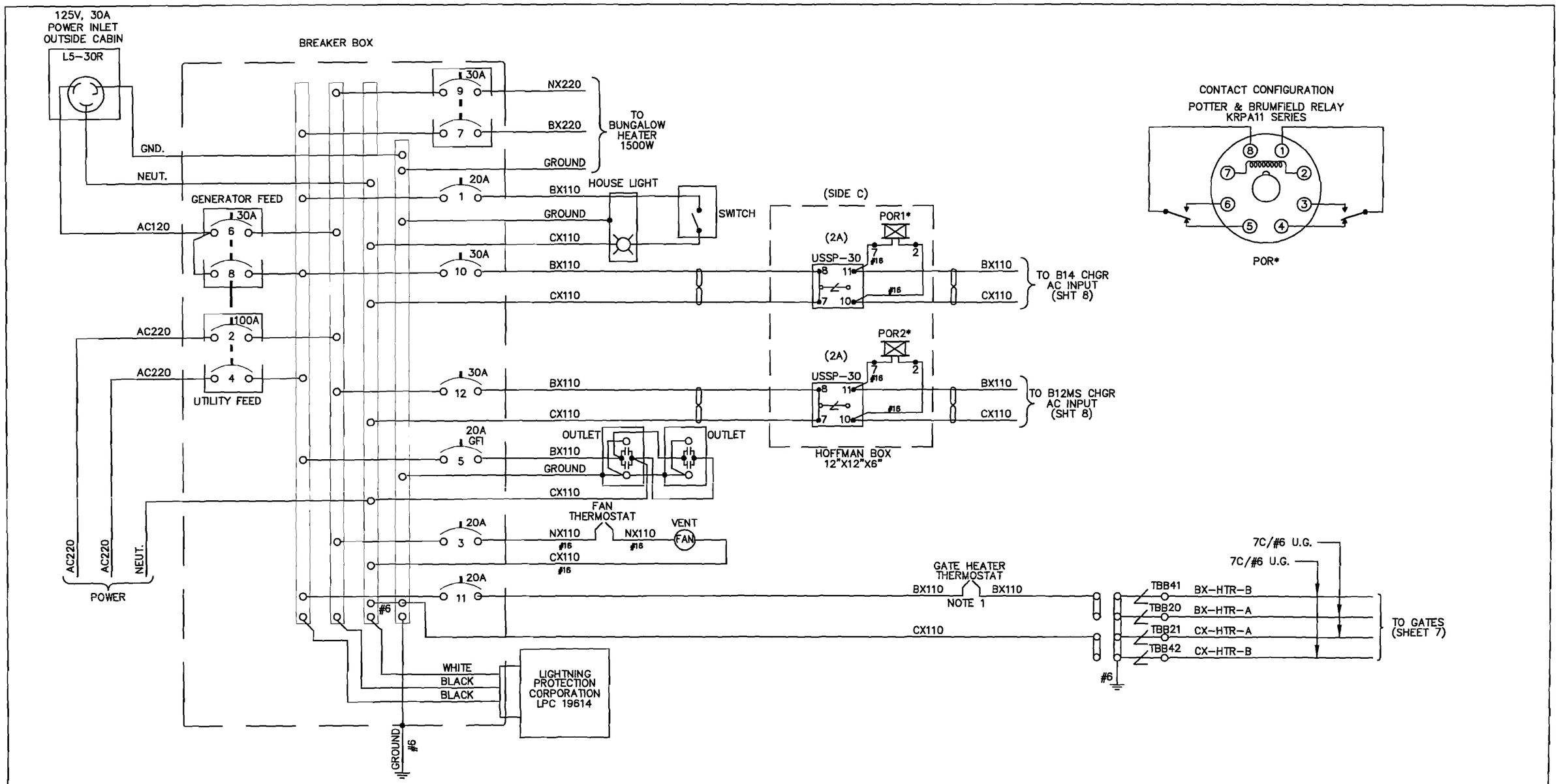

LEGEND:

⊂⊃⊂⊃ = TWIST TWO TURNS PER FOOT.

NOTES:

1.) REMOTE TEMPERATURE SENSING BULB TO BE MOUNTED OUTSIDE OF HOUSE.

2.) * = 120VAC NON-VITAL AC RELAY KUP-14A15-120, 5A.

3.) ALL WIRING THIS SHEET TO BE #10 AWG. UNLESS OTHERWISE NOTED.

THE J

This drawing was created using CADD. All field and office changes are to be routed through Main Office in East Joliet. DO NOT make changes to this original copy without notifying the Engineer-Signals, Communications & Electrical

NO	DESCRIPTION	BY	CHK'D	DATE
8				
7				
6				
5				
4				
3				
2				
1				
	AS IN SERVICE	TWH	TWH	XX/XX

REVISIONS

ELGIN, JOLIET & EASTERN RAILWAY COMPANY

AC POWER DISTRIBUTION
ENGLESBEE ROAD
MINOOKA, ILLINOIS

ENGINEERING SERVICES
JOLIET, IL 60432
SCALE NONE

CHECKED BY TWH
IN CHARGE OF TWH

DRAWN BY TWH
DATE 2/16/07
CAD ID 261014C-012.DWG

FILE NO. 261014C | SHEET NO. 12 | CONT'D ON 13

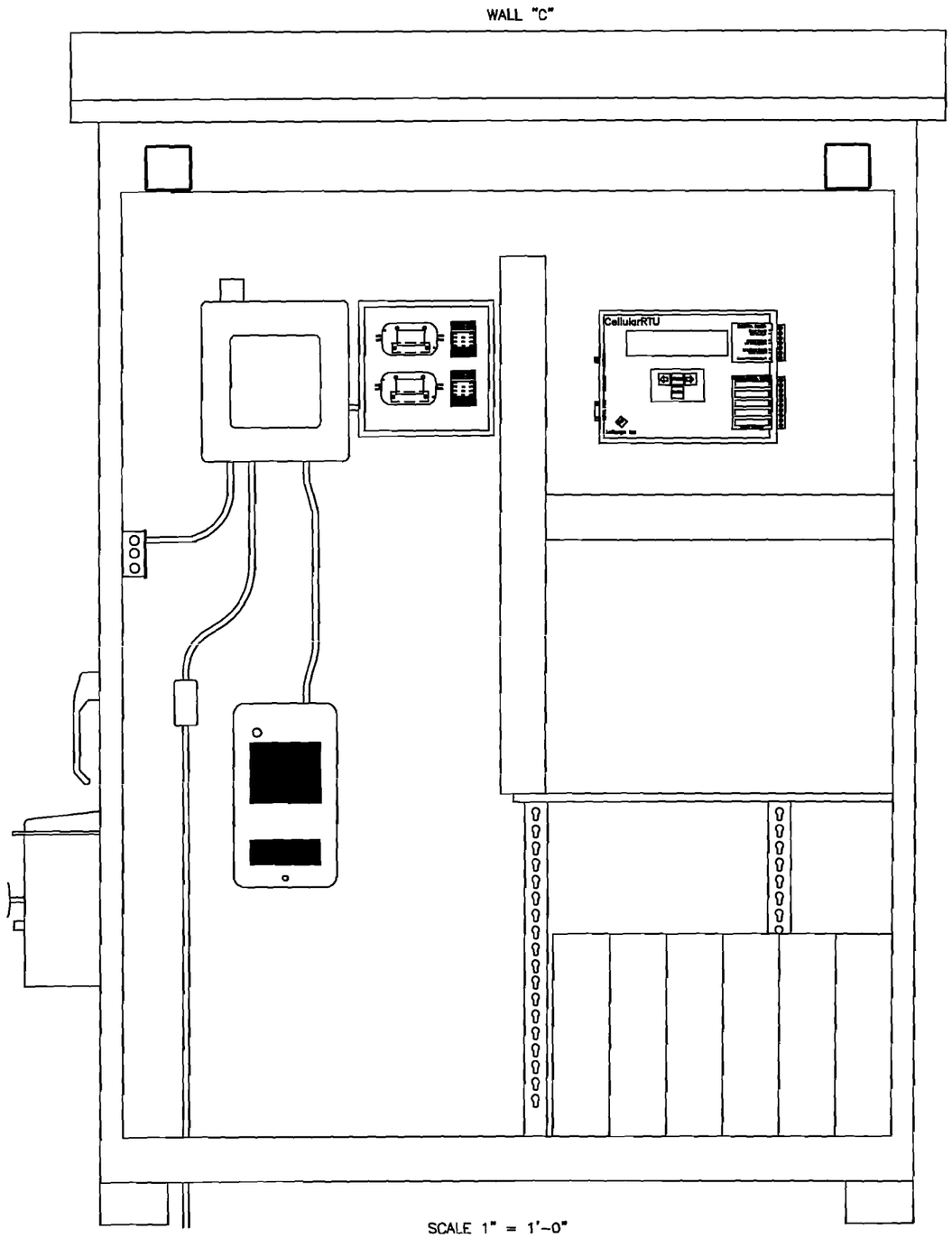

SCALE 1" = 1'-0"

HOFFMAN BOX DETAIL

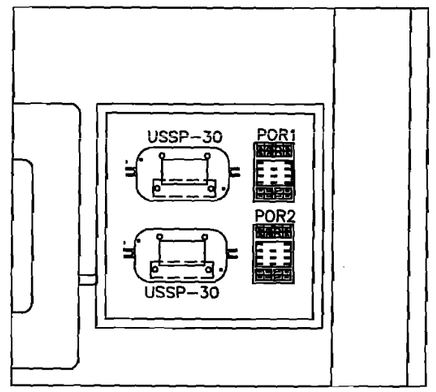

SCALE 3"=1'-0"

This drawing was created using CADD. All field and office changes are to be routed through Main Office in East Joliet. DO NOT make changes to this original copy without notifying the Engineer-Signals, Communications & Electrical.

NO	DESCRIPTION	BY	CHK'D	DATE
8				
7				
6				
5				
4				
3				
2				
1				
	AS IN SERVICE	TVH	TVH	XX/XX

REVISIONS

ELGIN, JOLIET & EASTERN RAILWAY COMPANY

WALL "C" LAYOUT DETAIL
ENGLESBEE ROAD
MINOOKA, ILLINOIS

ENGINEERING SERVICES
JOLIET, IL 60432
SCALE NONE

CHECKED BY TVH
IN CHARGE OF TVH

DRAWN BY TVH
DATE 2/16/07
CAD ID 261014C-013.DWG

FILE NO. 261014C

SHEET NO. 13

CONT'D ON --