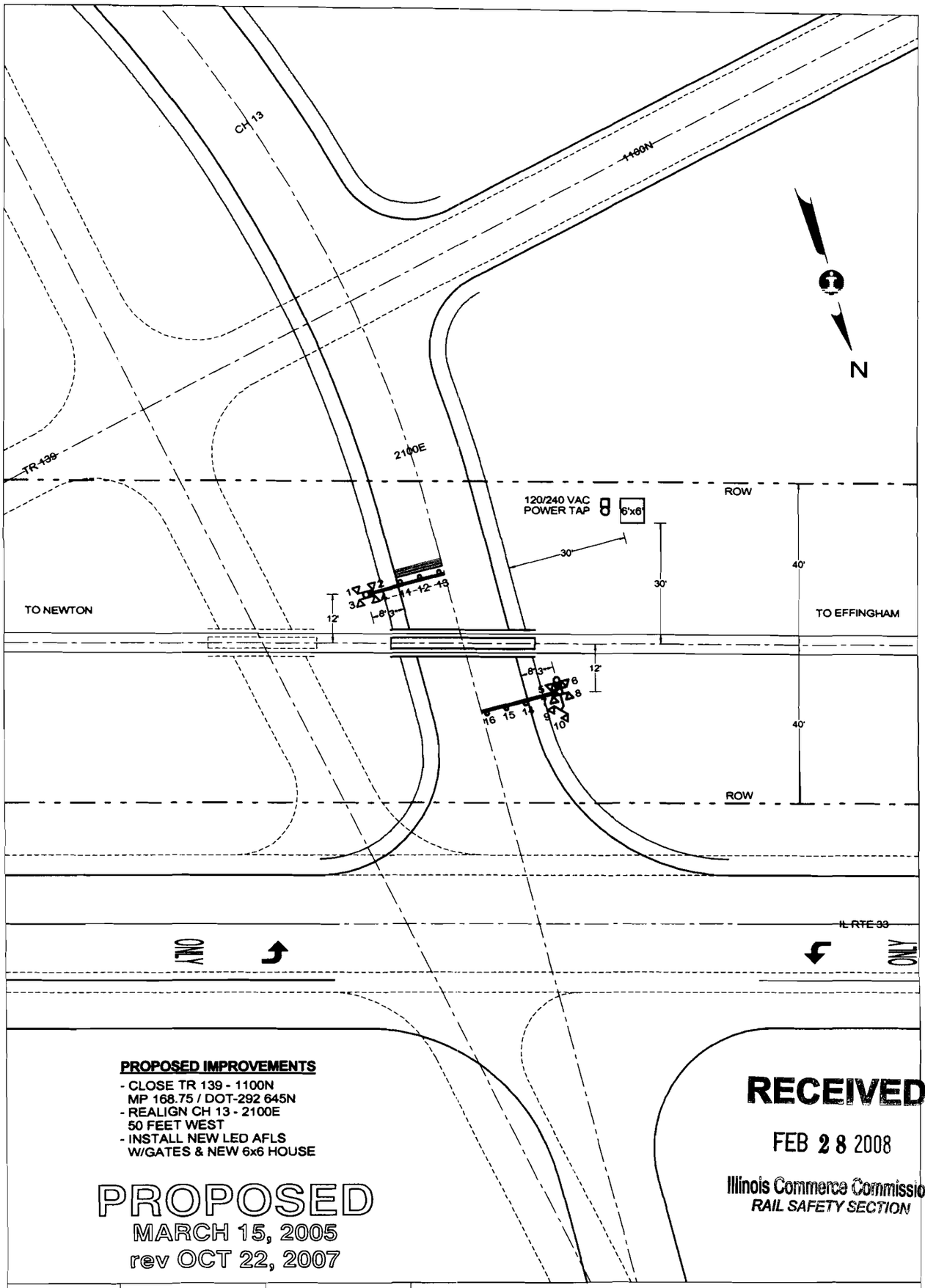

PROPOSED IMPROVEMENTS

- CLOSE TR 139 - 1100N
  MP 168.75 / DOT-292 645N
- REALIGN CH 13 - 2100E
  50 FEET WEST
- INSTALL NEW LED AFLS
  W/GATES & NEW 6x6 HOUSE

PROPOSED
MARCH 15, 2005
rev OCT 22, 2007

RECEIVED
FEB 28 2008
Illinois Commerce Commission
RAIL SAFETY SECTION

QUADRANT	SE	NW
STANDARD AFLS	LED	LED
CANTILEVER, FT.	-	-
GATE, FT.	20	20
ADDED LIGHTS	-	45 °
BARRICADE	-	-
MULTI-TK SIGN	-	-
BELL	-	X
REVISIONS		

E:\DWG\EFF\16880X.CAD

CN

SIGNALS & COMMUNICATIONS, ENGINEERING DEPARTMENT

CITY & STATE	DIETERICH, IL	SD 1051 X	
CROSSING	CH 13 - 2100E	DATE	MARCH 15, 2005
IC - 168.80-X		DOT - 292 646V	
MIDWEST DIVISION		EFFINGHAM SUBDIVISION	
IN SERVICE	SCALE 1"=30'	DRAWN BY	AVS

SD 1051 - MP 168 TO 169

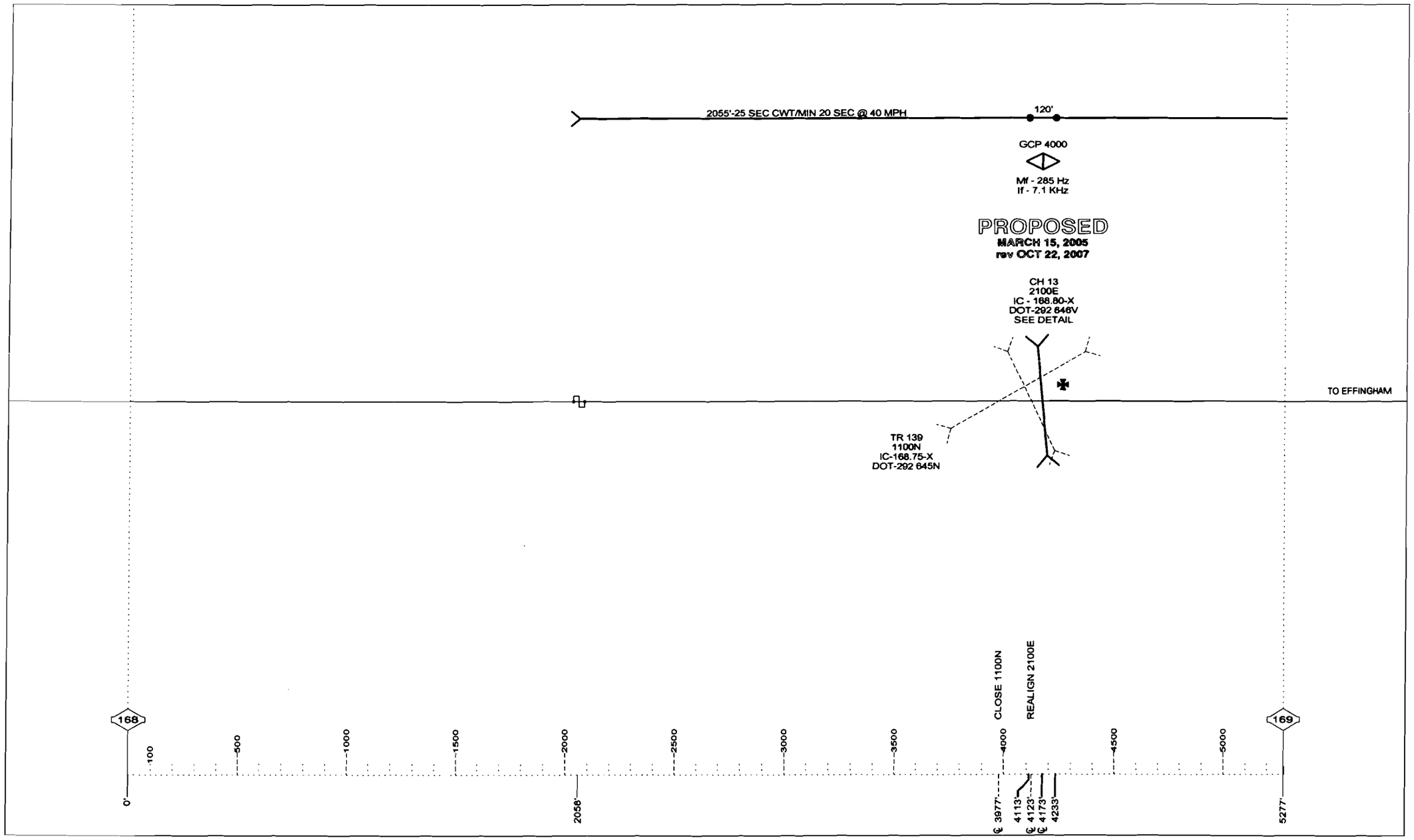

SD 1051 - MP 169 TO 170

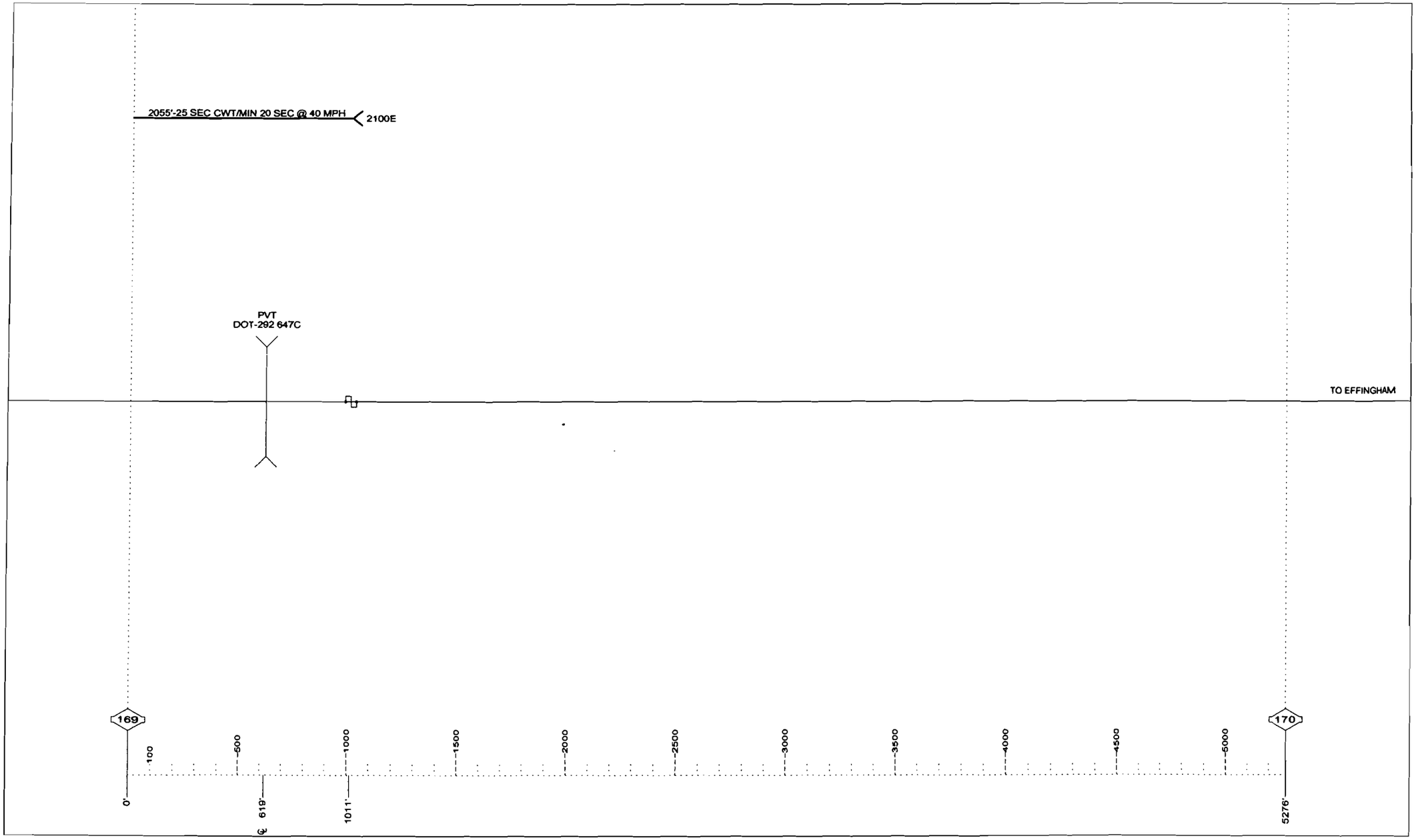

DRAWING SCALE 1" = 500'

REVISIONS				
NO.	DATE	BY	DESCRIPTION	APP. BY
1				
2				
3				
4				
5				

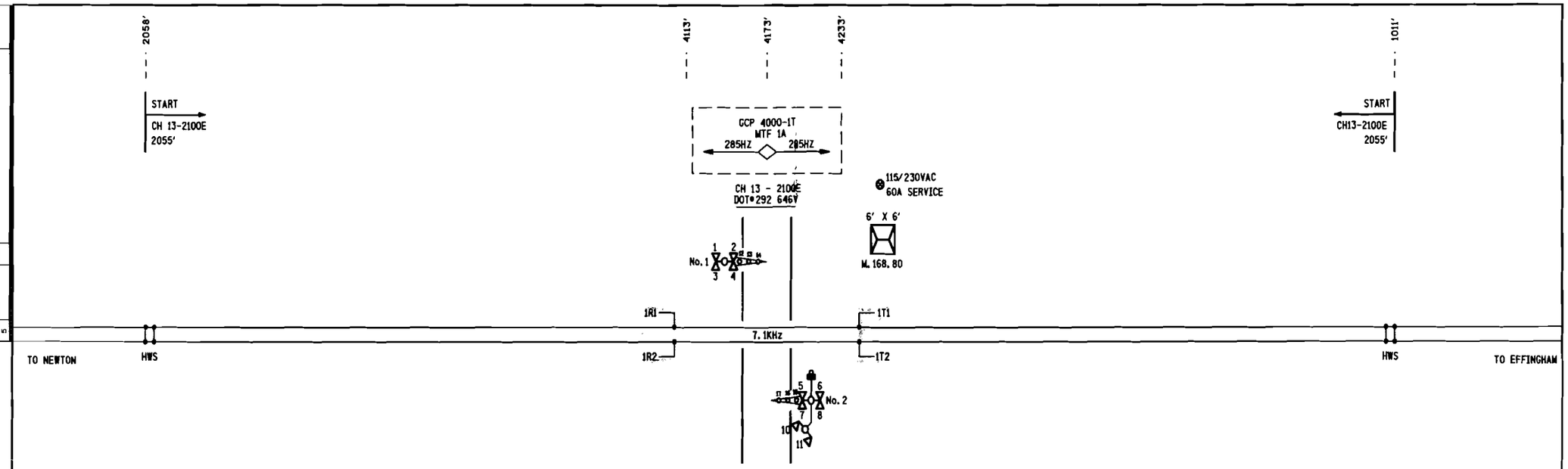

NOTES:

1) DENOTES HARDWIRE SHUNT

PROPOSED

DES. No. _____

RED-IN YELLOW-OUT

AS INSTALLED

DATE _____

BY _____

6' X 6' BUNGALOW

PROPOSED			REVISIONS	D	C	COMPLETED			C
D	M	Y				D	M	Y	

DIVISION MIDWEST
SUB. EFFINGHAM
SD. 1051 C
MP. 168.00 TO 169.25

SIGNALS AND COMMUNICATIONS
EDMONTON, ALBERTA

DES. RLB

15 NOVEMBER 2007

CH. RLC

TRACK LAYOUT

CH 13 - 2100E

DIETERICH, IL

M 16880C01

14

SAFETRAN SYSTEM CORP.
LOUISVILLE DIVISION, LOUISVILLE, KY

SAFETRAN SYSTEMS CORPORATION

DES.: RLB	DATE: 11/15/07	JOB NO.: PICA10142	
CKD.: RLC	ISSUE DATE: N/A	EST. NO. 1N/A	
DRN.: RLB	PLAN NO.: N/A	SHEET N/A OF N/A	
P TIME: 13:53	P DATE: 13-DEC-2007	CAD ID.: 16880C01	

NO.	DATE	BY	REVISIONS DESCRIPTION	APP. BY
1				
2				
3				
4				
5				

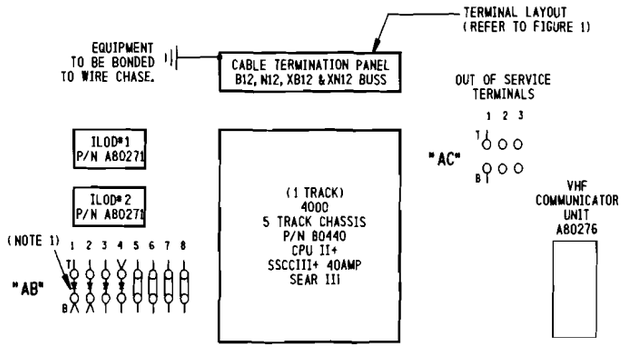

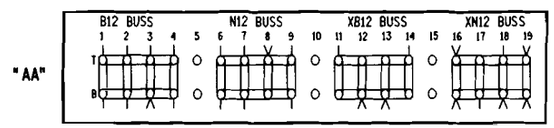

TERMINAL LAYOUT
FIGURE 1

NOTE:
1) ⊣⊢ DENOTES RECTIFIER : (SAFETRAN# 8008A299006)

SIDE" A"

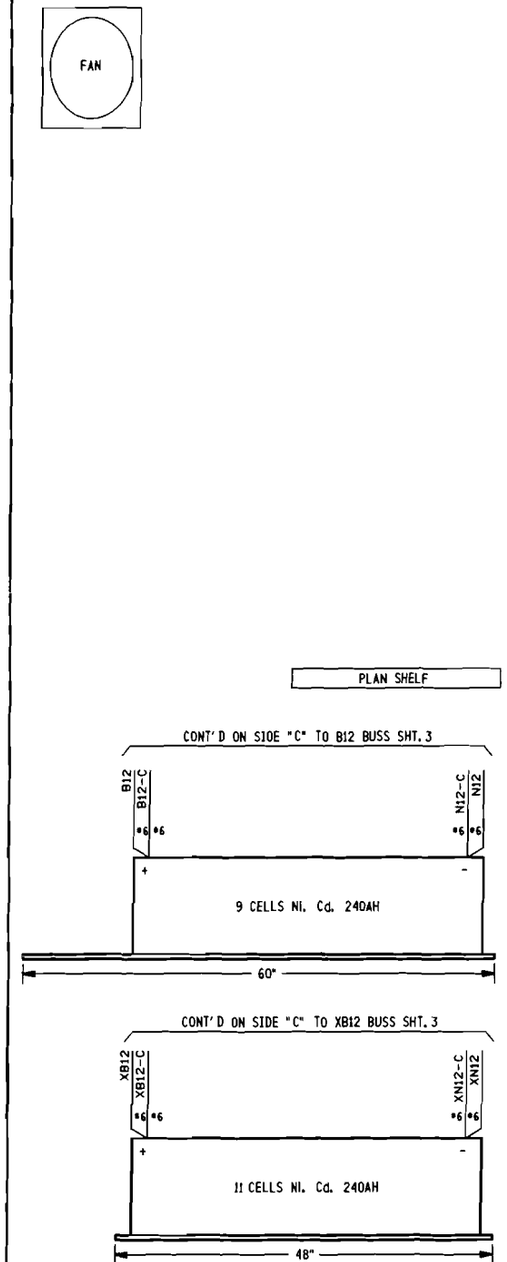

SIDE" B"

PROPOSED
DES. No. _____
RED-IN YELLOW-OUT
AS INSTALLED
DATE _____
BY _____

6' X 6' BUNGALOW

PROPOSED D	PROPOSED M	PROPOSED Y	REVISIONS	D	C	COMPLETED D	COMPLETED M	COMPLETED Y	C

DIVISION MIDWEST
SUB. EFFINGHAM
SD. 1051 C
MP. 168.00 TO 169.25

SIGNALS AND COMMUNICATIONS
EDMONTON, ALBERTA
DES. RLB
15 NOVEMBER 2007
CH. RLC

BUNGALOW LAYOUT
SIDE "A" & "B"
CH 13 - 2100E
DIETERICH, IL

M 16880C02

SAFETRAN SYSTEM CORP.
LOUISVILLE DIVISION, LOUISVILLE, KY

SAFETRAN SYSTEMS CORPORATION

DES. : RLB	DATE: 11/15/07	JOB NO. : PTCA10142	
CKD. : RLC	ISSUE DATE: N/A	EST. NO. : N/A	
DRN. : RLB	PLAN NO. : N/A	SHEET N/A OF N/A	
P TIME: 15:35	P DATE: 19-FEB-2008	CAD ID. : 16880C02	

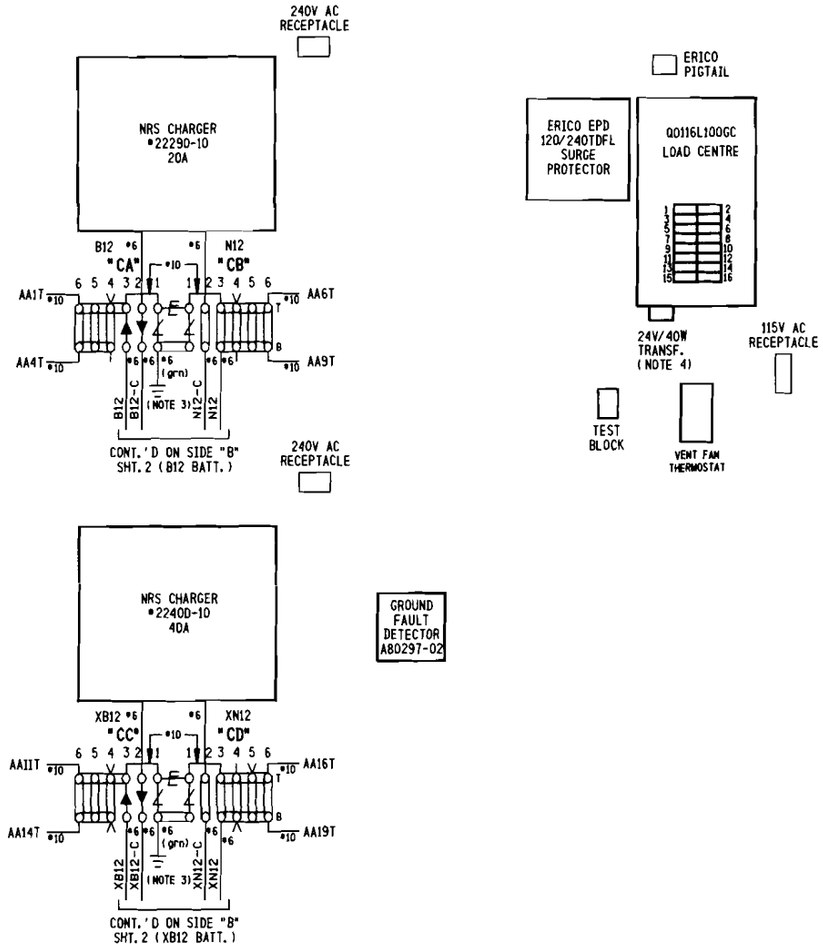

NOTES:

1) ⌿ DENOTES EQUALIZER TYPE: (SAFETRAN #022700-1X)
2) ⊼ DENOTES LIGHTNING ARRESTER TYPE: (SAFETRAN #022585-1X)
3) SURGE PROTECTION SHOULD BE BONDED TO BUNGALOW.
4) 24V-40W TRANSFORMER (CN STOCK #02-45-367)

SIDE "C"

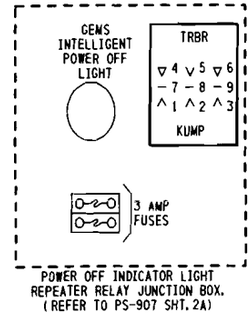

SIDE "D"
ABOVE ENTRY DOOR

PROPOSED
DES. No. _____
RED-IN YELLOW-OUT
AS INSTALLED
DATE _____
BY _____

6' X 6' BUNGALOW

PROPOSED D	M	Y	REVISIONS	D	C	COMPLETED D	M	Y	C

DIVISION MIDWEST
SUB. EFFINGHAM
SD. 1051 C
MP. 168.00 TO 169.25

SIGNALS AND COMMUNICATIONS EDMONTON, ALBERTA — DES. RLB
15 NOVEMBER 2007 — CH. RLC

BUNGALOW LAYOUT
SIDE "C" & OVER DOOR SIDE "D"
CH 13 - 2100E
DIETERICH, IL

M 16880C03

SAFETRAN SYSTEM CORP.
LOUISVILLE DIVISION, LOUISVILLE, KY

REVISIONS

NO.	DATE	BY	DESCRIPTION	APP. BY
1				
2				
3				
4				
5				

SAFETRAN SYSTEMS CORPORATION

DES.: RLB	DATE: 11/15/07	JOB NO.: PICA10142
CKD.: RLC	ISSUE DATE: N/A	EST. NO.: N/A
DRN.: RLB	PLAN NO.: N/A	SHEET N/A OF N/A
P TIME: 15:35	P DATE: 19-FEB-2008	CAD ID.: 16880C03

REVISIONS				
NO.	DATE	BY	DESCRIPTION	APP. BY
1				
2				
3				
4				
5				

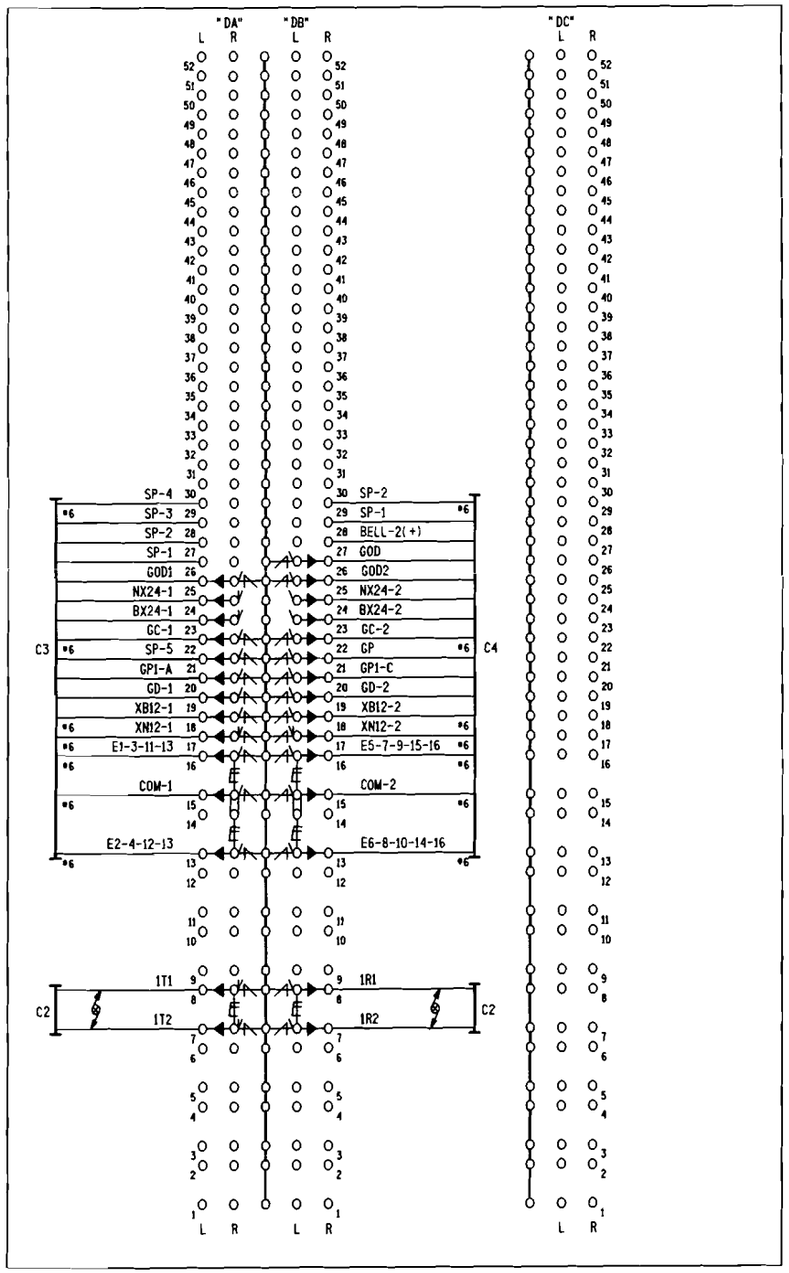

SIDE "D" (INSIDE)

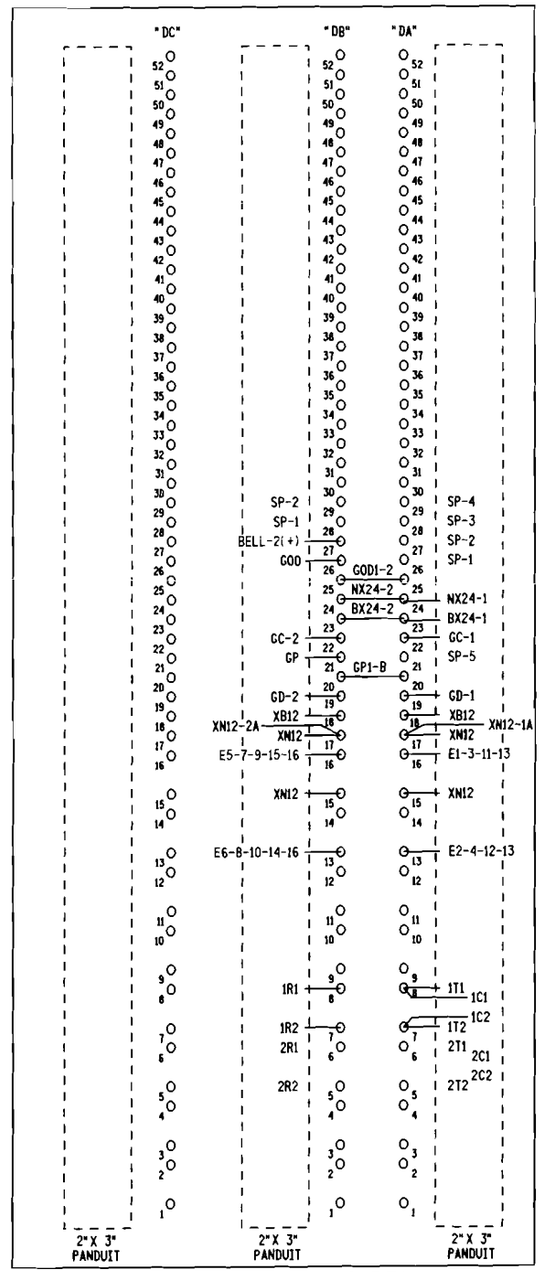

SIDE "D" (OUTSIDE)

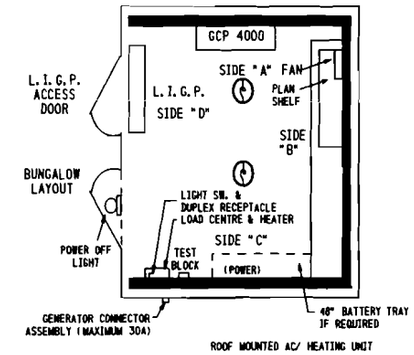

CABLE CONSIST:

C1-3C#6 TECK 90 U/G TO MAIN SERVICE
C2-(2)-2SC#6 TW. TO TRACK
C3-16C (7#6, 9#14) TO GATE (SIG.#1)
C4-16C (7#6, 9#14) TO GATE (SIG.#2)

NOTES:

1) DENOTES LIGHTNING ARRESTER TYPE:(SAFETRAN #022585-1X)
2) DENOTES EQUALIZER TYPE:(SAFETRAN #022700-1X)
3) DENOTES TWISTED PAIR.
4) ENSURE DOUBLE NUTTING OF ALL TERMINALS.

PROPOSED
DES. No. _____
RED-IN YELLOW-OUT
AS INSTALLED
DATE _____
BY _____

6' X 6' BUNGALOW

PROPOSED			REVISIONS	D	C	COMPLETED			C
D	M	Y				D	M	Y	

DIVISION WIDWEST
SUB. EFFINGHAM
SD. 1051 C
MP. 168.00 TO 169.25

SIGNALS AND COMMUNICATIONS EDMONTON, ALBERTA | DES. RLB
15 NOVEMBER 2007 | CH. RLC

BUNGALOW LAYOUT SIDE "D"
LOW IMPEDANCE GROUND PLANE
CH 13 - 2100E
DIETERICH, IL

M 16880C04

SAFETRAN SYSTEM CORP.
LOUISVILLE DIVISION, LOUISVILLE, KY

SAFETRAN SYSTEMS CORPORATION

DES. : RLB	DATE: 11/15/07	JOB NO. : PICA10142	
CKD. : RLC	ISSUE DATE: N/A	EST. NO. :N/A	
DRN. : RLB	PLAN NO. :N/A	SHEET N/A OF N/A	
P TIME:15:35	P DATE: 19-FEB-2008	CAD ID. : 16880C04	

REVISIONS				
NO.	DATE	BY	DESCRIPTION	APP. BY
1				
2				
3				
4				
5				

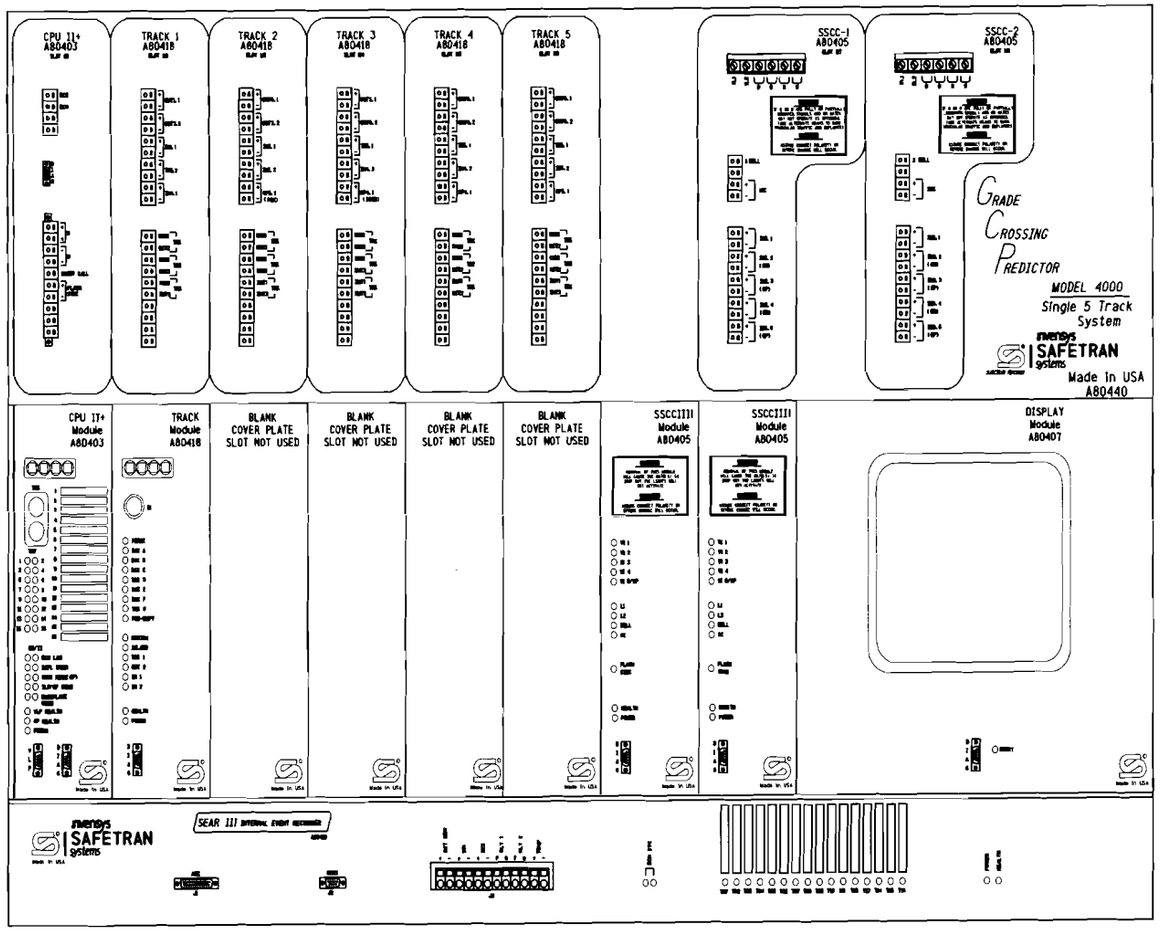

NOTE:

1) DISABLE THE DISPLAY HEATER BY REMOVING JUMPER J-22 (LOCATED AT THE EDGE OF THE DISPLAY MODULE CARD THAT PLUGS INTO THE CHASSIS).

ATTENTION!

ENSURE THE DISPLAY MODULE HEATER IS DISABLED. LEAVING THE DISPLAY HEATER ENABLE WILL REDUCE THE AMOUNT OF BATTERY STANDBY TIME IN THE EVENT OF AN AC POWER FAILURE.

HEATER FUNCTION IS
JUMPER SELECTABLE ON
THE DISPLAY MODULE BOARD.
THREE OPTIONS ARE AVAILABLE.
NORMAL LCD HTR (DEFAULT)
HI CURRENT
NO JUMPER (HEATER DISABLED)

PROPOSED
DES. No. _____
RED-IN YELLOW-OUT
AS INSTALLED
DATE _____
BY _____

6' X 6' BUNGALOW

PROPOSED			REVISIONS	D	C	COMPLETED			C
D	M	Y				D	M	Y	

DIVISION MIDWEST
SUB. EFFINGHAM
SD. 1051 C
MP. 168.00 TO 169.25

SIGNALS AND COMMUNICATIONS
EDMONTON, ALBERTA

DES. RLB
CH. RLC

15 NOVEMBER 2007

GCP 4000 NON REDUNDANT
5 TRK CHASSIS & MOD. LAYOUT
CH 13 - 2100E

DIETERICH, IL

M 16880C05

SAFETRAN SYSTEM CORP.
LOUISVILLE DIVISION, LOUISVILLE, KY

SAFETRAN SYSTEMS CORPORATION

DES.: RLB	DATE: 11/15/07	JOB NO.: PICA1014Z	
CKD.: RLC	ISSUE DATE: N/A	EST. NO.: N/A	
DRN.: RLB	PLAN NO.: N/A	SHEET N/A OF N/A	
P TIME: 15:35	P DATE: 19-FEB-2008	CAD ID.: 16880C05	

NO.	DATE	BY	DESCRIPTION	APP. BY
1				
2				
3				
4				
5				

REVISIONS

(TRACK NOT USED)

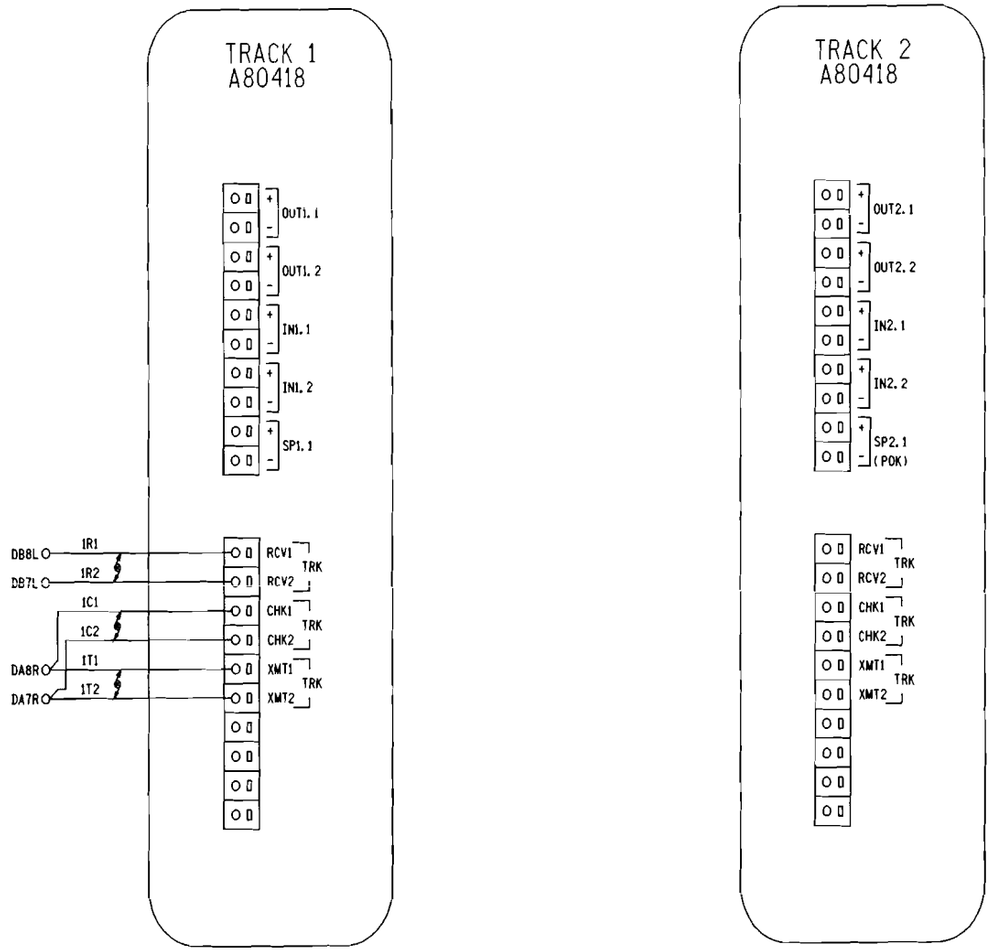

NOTES:

1) ALL WIRING #16 AWG MINIMUM UNLESS OTHERWISE NOTED. WIRE SIZES SHOWN ARE MINIMUM GAUGE.

2) DENOTES TWISTED PAIR.

PROPOSED
DES. No. _____
RED-IN YELLOW-OUT
AS INSTALLED
DATE _____
BY _____

6'X 6' BUNGALOW

PROPOSED D	M	Y	REVISIONS	D	C	COMPLETED D	M	Y	C

DIVISION MIDWEST
SUB. EFFINGHAM
SD. 1051 C
MP. 168.00 TO 169.25

SIGNALS AND COMMUNICATIONS
EDMONTON, ALBERTA
15 NOVEMBER 2007

DES. RLB
CH. RLC

GCP 4000 NON REDUNDANT
TRACK CONNECTIONS
CH 13 - 2100E
DIETERICH, IL

M 16880C06

SAFETRAN SYSTEM CORP.
LOUISVILLE DIVISION, LOUISVILLE, KY

SAFETRAN SYSTEMS CORPORATION

DES. : RLB	DATE: 11/15/07	JOB NO. : P1CA10142	
CKD. : RLC	ISSUE DATE: N/A	EST. NO. :N/A	
DRN. : RLB	PLAN NO. :N/A	SHEET N/A OF N/A	
P TIME:15:35	P DATE: 19-FEB-2008	CAD ID. : 16880C06	

NO.	DATE	BY	DESCRIPTION	APP. BY
1				
2				
3				
4				
5				

REVISIONS

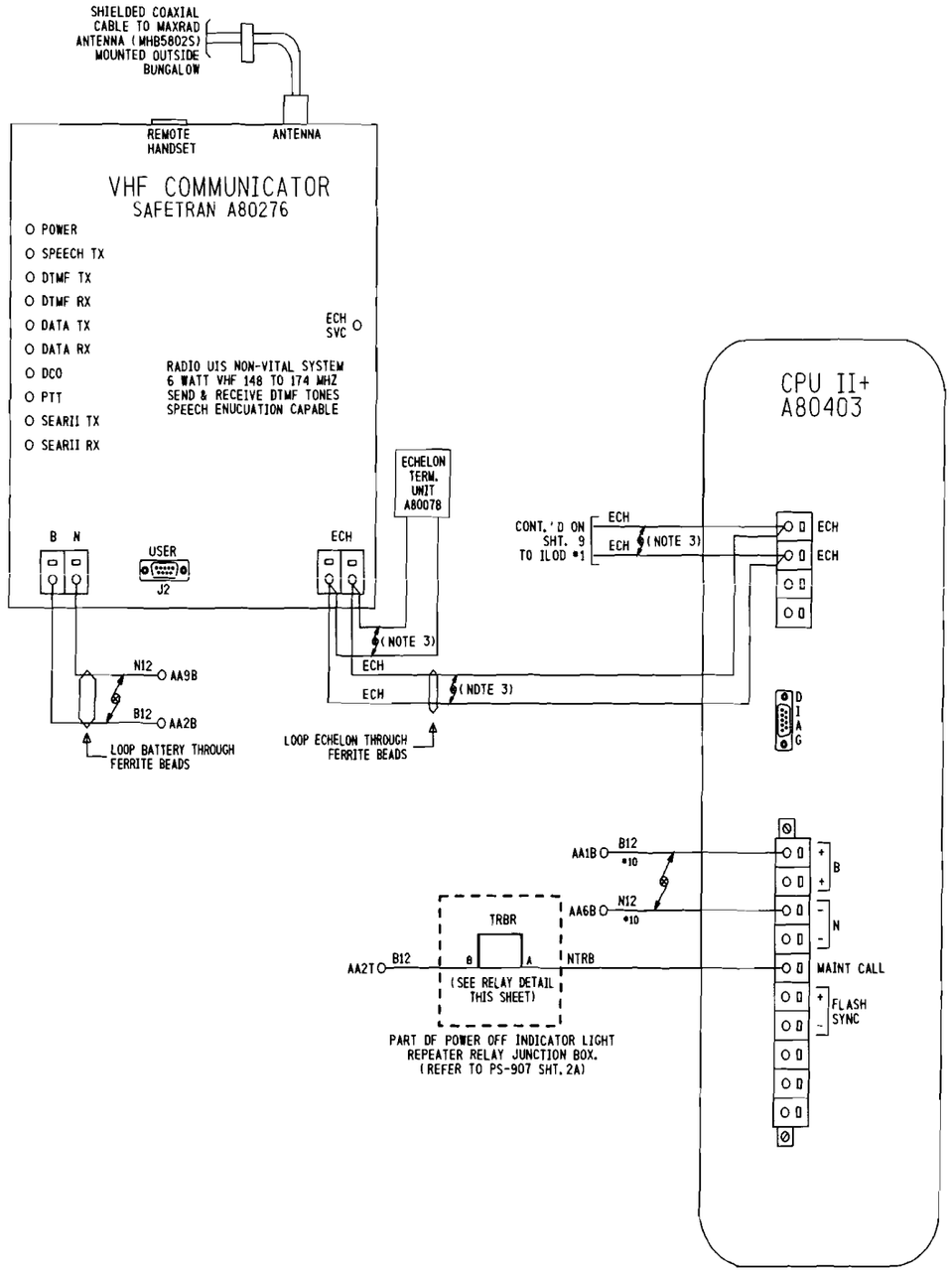

RELAY DETAIL

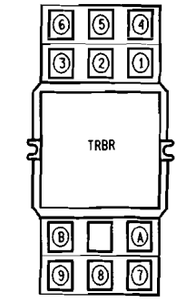

RELAY - POTTER & BRUMFIELD
MODEL KUMP-14D18-12 SOCKET MOUNTABLE
12 VDC W/ 3 FORM C CONTACTS.

SOCKET - SCREW TERMINAL
MODEL 27E121.

RELAY WIRING DIAGRAM (REAR VIEW)

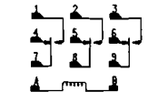

NOTE:
SOCKET NUMBERING CORRESPONDS DIRECTLY WITH RELAY NUMBERING.
(COIL SHOWN ENERGIZED)

NOTES:

1) ALL WIRING #16 AWG UNLESS OTHERWISE NOTED.

2) DENOTES TWISTED PAIR.

3) USE BELDEN CABLE, PART #8461-u500-60 FOR ALL ECHELON AND LAN WIRING.

PROPOSED
DES. No. _____
RED-IN YELLOW-OUT
AS INSTALLED
DATE _____
BY _____

6' X 6' BUNGALOW

PROPOSED D	M	Y	REVISIONS	D	C	COMPLETED D	M	Y	C

DIVISION MIDWEST
SUB. EFFINGHAM
SD. 1051 C
MP. 168.00 TO 169.25

SIGNALS AND COMMUNICATIONS
EDMONTON, ALBERTA

DES. RLB
CH. RLC

15 NOVEMBER 2007

SAFETRAN INTERNAL EVENT ANALYZER
CPUII+ & VHF COMMUNICATOR
CH 13 - 2100E
DIETERICH, IL

M 16880C07

SAFETRAN SYSTEM CORP.
LOUISVILLE DIVISION, LOUISVILLE, KY

SAFETRAN SYSTEMS CORPORATION

DES. : RLB	DATE: 11/15/07	JOB NO.: PTCA10142	
CKD. : RLC	ISSUE DATE: N/A	EST. NO.:	
DRN. : RLB	PLAN NO.: N/A	SHEET N/A OF N/A	
P TIME: 15:35	P DATE: 19-FEB-2008	CAD ID.: 16880C07	

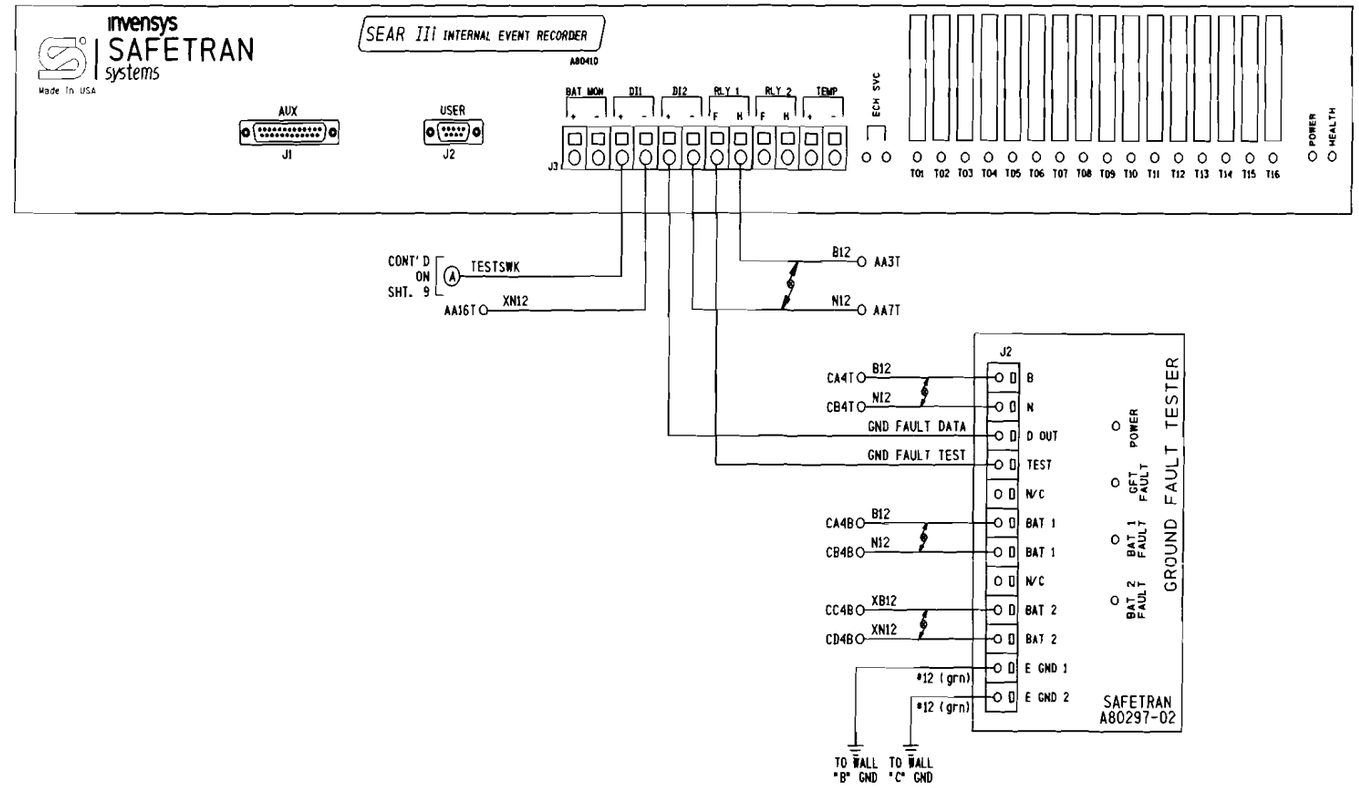

REVISIONS				
NO.	DATE	BY	DESCRIPTION	APP. BY
1				
2				
3				
4				
5				

SAFETRAN SYSTEMS CORPORATION		
DES.: RLB	DATE: 11/15/07	JOB NO.: PICA10142
CKD.: RLC	ISSUE DATE: N/A	EST. NO.: 1
DRN.: RLB	PLAN NO.: N/A	SHEET N/A OF N/A
P TIME: 15:35	P DATE: 19-FEB-2008	CAD ID.: 16880C08

PROPOSED
DES. No. _____
RED-IN YELLOW-OUT
AS INSTALLED
DATE _____
BY _____

6' X 6' BUNGALOW

PROPOSED D	M	Y	REVISIONS	D	C	COMPLETED D	M	Y	C

NOTES:

1) ALL WIRING #16 AWG UNLESS OTHERWISE NOTED.

2) DENOTES TWISTED PAIR.

DIVISION MIDWEST
SUB. EFFINGHAM
SD. 1051 C
MP. 168.00 TO 169.25

SIGNALS AND COMMUNICATIONS
EDMONTON, ALBERTA

DES. RLB
CH. RLC

15 NOVEMBER 2007

SAFETRAN INTERNAL EVENT ANALYZER
SEARII WITH GFT
CH 13 - 2100E

DIETERICH, IL

M 16880C08

SAFETRAN SYSTEM CORP.
LOUISVILLE DIVISION, LOUISVILLE, KY

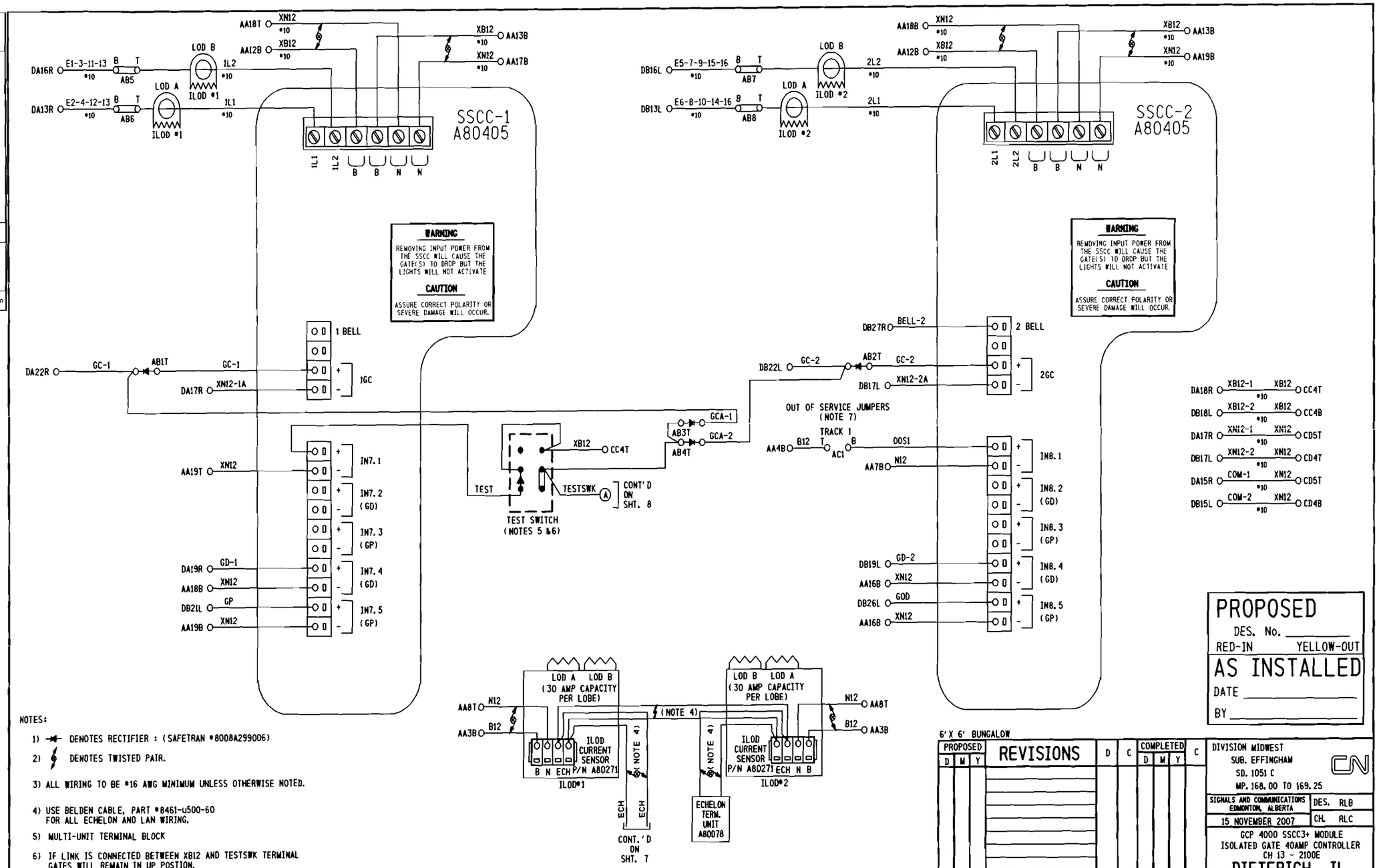

NOTES:

1) DENOTES RECTIFIER : (SAFETRAN #8008A299006)

2) DENOTES TWISTED PAIR.

3) ALL WIRING TO BE #16 AWG MINIMUM UNLESS OTHERWISE NOTED.

4) USE BELDEN CABLE, PART #8461-u500-60 FOR ALL ECHELON AND LAN WIRING.

5) MULTI-UNIT TERMINAL BLOCK

6) IF LINK IS CONNECTED BETWEEN XB12 AND TESTSWK TERMINAL GATES WILL REMAIN IN UP POSTION.

7) TO TAKE TRACK 1 (T1) OUT OF SERVICE, JUMPER AC1T TO AC1B

PROPOSED
DES. No. _____
RED-IN YELLOW-OUT
AS INSTALLED
DATE _____
BY _____

6' X 6' BUNGALOW

PROPOSED D	M	Y	REVISIONS	D	C	COMPLETED D	M	Y	C

DIVISION MIDWEST
SUB. EFFINGHAM
SD. 1051 C
MP. 168.00 TO 169.25

SIGNALS AND COMMUNICATIONS EDMONTON, ALBERTA — DES. RLB
15 NOVEMBER 2007 — CH. RLC

GCP 4000 SSCC3+ MODULE
ISOLATED GATE 40AMP CONTROLLER
CH 13 ~ 2100E

DIETERICH, IL

M 16880C09

SAFETRAN SYSTEM CORP.
LOUISVILLE DIVISION, LOUISVILLE, KY

NO.	DATE	BY	DESCRIPTION	APP. BY
1				
2				
3				
4				
5				

REVISIONS

SAFETRAN SYSTEMS CORPORATION

DES. : RLB	DATE: 11/15/07	JOB NO. : PICA10142
CKD. : RLC	ISSUE DATE: N/A	EST. NO. :N/A
DRN. : RLB	PLAN NO. :N/A	SHEET N/A OF N/A
P. TIME:15.33	P. DATE: 19-FEB-2008	CAD ID. : 16880C09

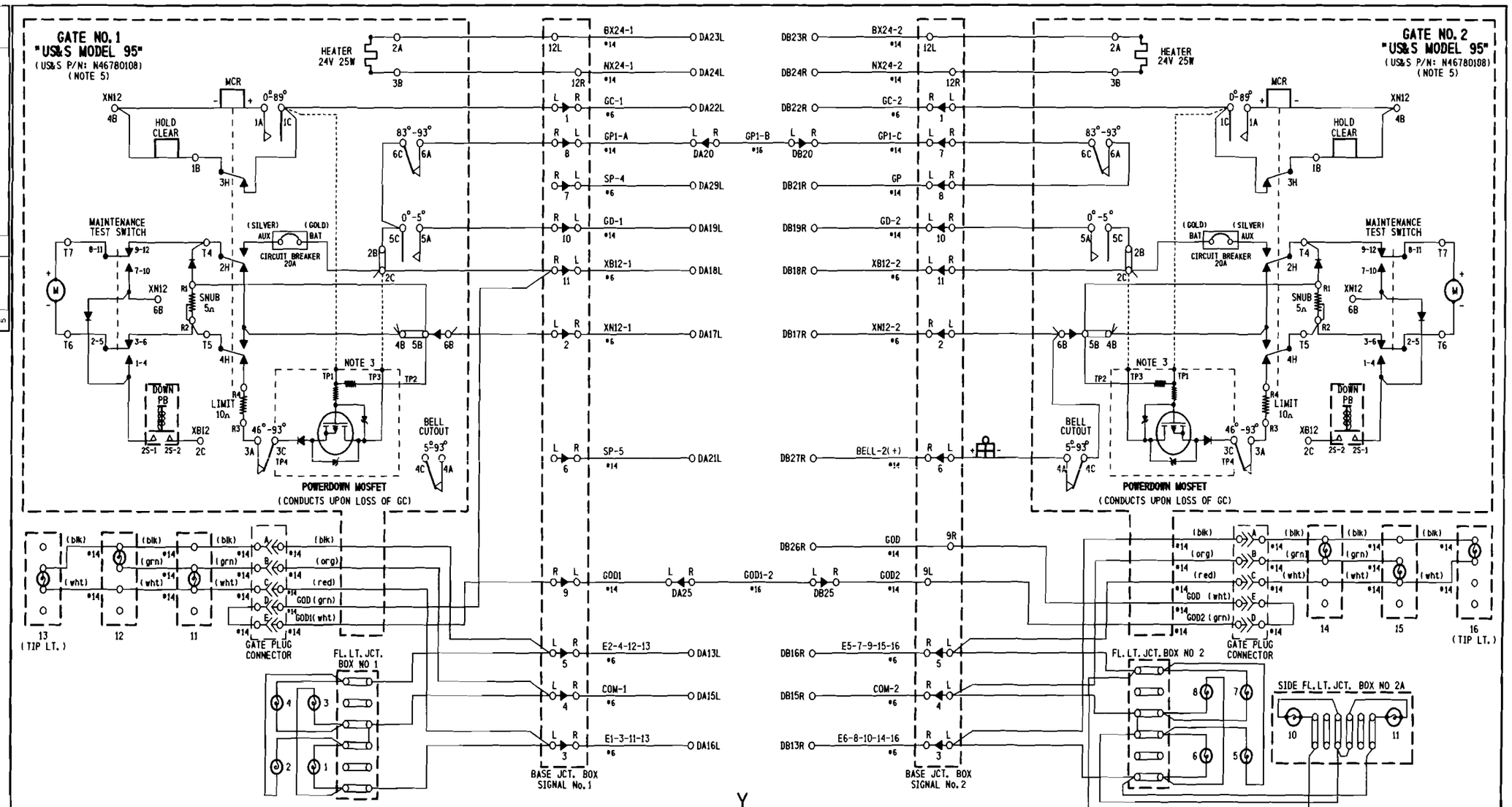

NOTES:

1) ON GATE No. 1 ADD STRAP BETWEEN TERMINAL 2B & 2C ADD JUMPER BETWEEN TERMINAL 2B & 5C AND BETWEEN TERMINAL 5C & 6C.
2) ON GATE No. 2 ADD STRAP BETWEEN TERMINAL 2B & 2C ADD JUMPER BETWEEN TERMINAL 2B & 5C AND CONNECT GP AS SHOWN.
3) POWERDOWN PCB TERMINALS TP1, TP3 & TP4 FIT OVER TERMINALS 1C, 2C & 3C RESPECTIVELY.
4) ALL WIRING #10 AWG MINIMUM UNLESS OTHERWISE NOTED. WIRE SIZES SHOWN ARE MINIMUM GAUGE.
5) GATE DESCENT TIME (RELEASE FROM VERTICAL TO FULLY HORIZONTAL) TO BE WITHIN 11 SECONDS.
6) ENSURE ALL TERMINALS HAVE TWO SHOULDER NUTS.
7) FOR GATE(S) THAT HAS BELL, ADD JUMPER BETWEEN 4C AND 6B.

PROPOSED
DES. No. _____
RED-IN YELLOW-OUT
AS INSTALLED
DATE _____
BY _____

PROPOSED D	M	Y	REVISIONS	D	C	COMPLETED D	M	Y	C

DIVISION MIDWEST
SUB. EFFINGHAM
SD. 1051 C
MP. 168.00 TO 169.25

SIGNALS AND COMMUNICATIONS EDMONTON, ALBERTA — DES. RLB
15 NOVEMBER 2007 — CH. RLC

GATE MECHANISM CONTROL CIRCUITS
CH 13 - 2100E
DIETERICH, IL

M 16880C10

SAFETRAN SYSTEM CORP.
LOUISVILLE DIVISION, LOUISVILLE, KY

SAFETRAN SYSTEMS CORPORATION
DES.: RLB — DATE: 11/15/07 — JOB NO.: PTCA10142
CKD.: RLC — ISSUE DATE: N/A — EST. NO.: N/A
DRN.: RLB — PLAN NO.: N/A — SHEET N/A OF N/A
P TIME: 15:35 — P DATE: 19-FEB-2008 — CAD ID.: 16880C10

NO.	DATE	BY	REVISIONS DESCRIPTION	APP. BY
1				
2				
3				
4				
5				

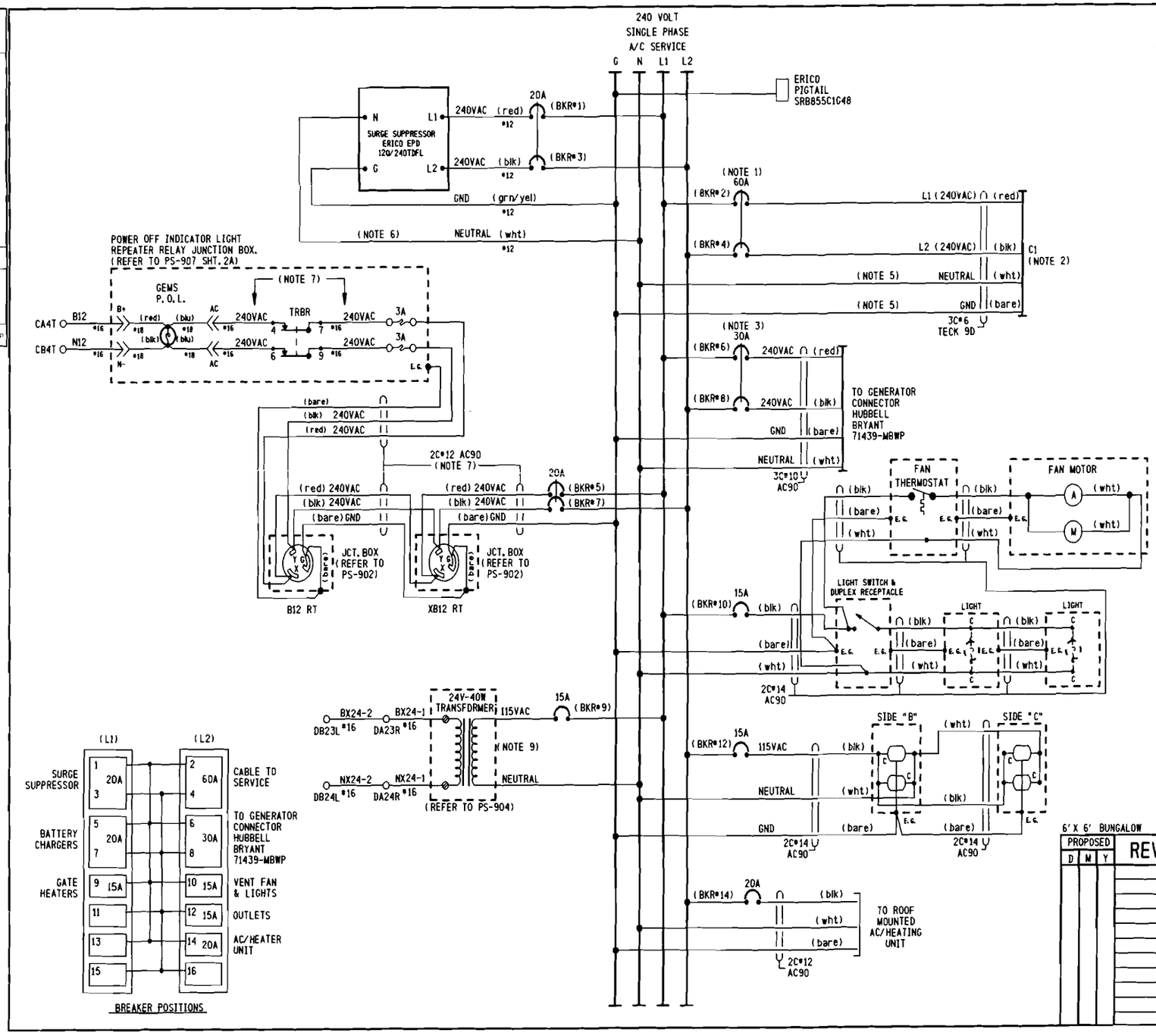

NOTES:

1) CIRCUIT BREAKER NOT TO EXCEED 60 AMPERES. RETAINING KIT PK4MB2LA MUST BE USED WITH 60A BREAKER.
2) FEEDER CIRCUIT BREAKER, AT STUB POLE SERVICE PANEL, NOT TO EXCEED 60 AMPERES.
3) A SWITCH TRANSFER KIT MUST BE INSTALLED BETWEEN THE SERVICE DISCONNECT BREAKER AND THE GENERATOR HOOK UP.
4) WHERE SEPARATE GROUND WIRE EXISTS BETWEEN THE SERVICE AND THE LOAD CENTER, REMOVE THE BRASS COLORED BONDING SCREW. (REFER TO SCHEMATIC ON BOX COVER FOR EXACT LOCATION)
5) S.C.*6 STRANDED, CSA TYPE R90 (X-LINK)
6) KEEP LEADS AS SHORT AS POSSIBLE
7) THE WHITE CONDUCTOR MUST BE MADE PERMANENTLY UNIDENTIFIABLE BY TAPING THIS CONDUCTOR RED. TAPING MUST BE CONTINUOUS WHERE THE SEPARATE CONDUCTORS HAVE BEEN MADE ACCESSIBLE AND VISIBLE.
8) « DENOTES WAGO TERMINAL
9) 24 VOLT - 40 WATT TRANSFORMER (CN STOCK #02-45-367)

PROPOSED
DES. No. _____
RED-IN YELLOW-OUT
AS INSTALLED
DATE _____
BY _____

6' X 6' BUNGALOW

PROPOSED D	M	Y	REVISIONS	D	C	COMPLETED D	M	Y	C

DIVISION MIDWEST
SUB. EFFINGHAM
SD. 1051 C
MP. 168.00 TO 169.25

SIGNALS AND COMMUNICATIONS EDMONTON, ALBERTA
15 NOVEMBER 2007
DES. RLB
CH. RLC

POWER DISTRIBUTION
CH 13 - 2100E
DIETERICH, IL

M 16880C11

SAFETRAN SYSTEM CORP.
LOUISVILLE DIVISION, LOUISVILLE, KY

REVISIONS

NO.	DATE	BY	DESCRIPTION	APP. BY
1				
2				
3				
4				
5				

SAFETRAN SYSTEMS CORPORATION

DES.: RLB	DATE: 11/15/07	JOB NO.: PICA10142	
CKD.: RLC	ISSUE DATE: N/A	EST. NO.: N/A	
DRN.: RLB	PLAN NO.: N/A	SHEET N/A OF N/A	
P TIME: 15:35	P DATE: 19-FEB-2008	CAD ID.: 16880C11	

NO.	DATE	BY	DESCRIPTION	APP. BY
1				
2				
3				
4				
5				

REVISIONS

Program Report

Location and SIN

DOT Number: 292646V
Milepost Number: 168.80
Site Name: CH13 - 2100E

SIN: 762010010016

MCF and Template Selection

MCF Name: GCP-T6X-01-2.mcf
MCF Revision: 012
MCFCRC: 0DFE7A0C

Template = 1A:6 Trk Bi

Program

BASIC: module configuration
Track 1 Slot = Track
Track 2/RIO 1 Slot = Not Used
Track 3 Slot = Not Used
Track 4 Slot = Not Used
Track 5/RIO 2 Slot = Not Used
Track 6/RIO 3 Slot = Not Used
SSCC-1 Slot = SSCC31
SSCC-2 Slot = SSCC31
SEAR Used = Yes

BASIC: MS/GCP operation
Track 1 : MS/GCP Operation = Yes

BASIC: island operation
Track 1 : Island Used = Internal

BASIC: preemption
Preempt Logic = No

BASIC: radio Dax links
Radio DAX link A Used = No
Radio DAX link B Used = No

BASIC: VitalComms links
VitalComms link 1 Used = No
VitalComms link 2 Used = No

PREDICTORS: track 1
Track 1 : Prime Used = Yes
Track 1 : Dax A Used = No
Track 1 : Dax B Used = No
Track 1 : Dax C Used = No
Track 1 : Dax D Used = No
Track 1 : Dax E Used = No
Track 1 : Dax F Used = No
Track 1 : Dax G Used = No

GCP: track 1
Track 1 : GCP Freq Category = Standard
Track 1 : GCP Frequency = 285 Hz
Track 1 : Approach Distance = 2055 ft
Track 1 : Uni/Bi/Sim-Bidirnl = Bidirnl
Track 1 : GCP Transmit Level = High
Track 1 : Island Connection = Isl1
Track 1 : Island Distance = 120 ft
Track 1 : Computed Distance = 9999 ft
Track 1 : Linearization Steps = 100

GCP: track 1 prime
Track 1 : Prime Warning Time = 30 sec
Track 1 : Prime Offset Distance = 0 ft
Track 1 : Switch MS EZ Level = 14
Track 1 : Prime MS/GCP Mode = Pred
Track 1 : Prime Pickup Delay = 30 sec
Track 1 : Prime UAX = Not Used

GCP: track 1 low EZ detect
Track 1 : Low EZ Detection Used = No
Track 1 : Positive Start = Off
Track 1 : Enhanced Detectn Used = Yes
Track 1 : Station Stop Timer = 10 sec
Track 1 : False Activate Level = Normal
Track 1 : Poor Shunting Level = 2

GCP: track 1 MS Control
Track 1 : MS/GCP CtrlIP Used = No
Track 1 : MS Sensitivity Level = 0
Track 1 : Compensation Level = 1300
Track 1 : Low EX Adjustment = 39
Track 1 : Bidirn Dax Passthru = No

ISLAND: track 1
Track 1 : IslFrequency = 7.1 kHz
Track 1 : Pickup Delay (2s +) = 0 sec

AND: track Anding
AND 1 XR Used = Yes
AND 2 Used = No
AND 3 Used = No
AND 4 Used = No
AND 5 Used = No
AND 6 Used = No
AND 7 Used = No
AND 8 Used = No

AND: AND 1 XR
AND 1 XR Track 1 = Prime
AND 1 Enable Used = Yes
And 1 Enable Pickup = 0 sec
AND 1 Enable Drop = 0 sec
AND 1 Wrap Used = No

ADVANCED: MS restart
MS/GCP Restart Used = No

ADVANCED: out of service
OOS Control = OOS IPs

ADVANCED: out of service 2
T1 OOS Control = OOS Input 1
T1 OOS Controls = GCP and Island

ADVANCED: track wrap circuits
Wrap LOS Timer = 5 sec
Track 1 Wrap Used = No

ADVANCED: trk 1 overrides
Track 1 : AllPredictors Override Used = No

ADVANCED: OR logic
OR 1 Used = No
OR 2 Used = No
OR 3 Used = No
OR 4 Used = No

ADVANCED: internal I/O 1
Pass Thrus = No
Int.1 Sets = Not Used
Int.1 Set by = Not Used
Int.2 Sets = Not Used
Int.2 Set by = Not Used
Int.3 Sets = Not Used
Int.3 Set by = Not Used
Int.4 Sets = Not Used
Int.4 Set by = Not Used

ADVANCED: internal I/O 2
Int.5 Sets = Not Used
Int.5 Set by = Not Used
Int.6 Sets = Not Used
Int.6 Set by = Not Used
Int.7 Sets = Not Used
Int.7 Set by = Not Used
Int.8 Sets = Not Used
Int.8 Set by = Not Used

ADVANCED: site options
Daylight Savings = On
Units = Standard
Ext Maint CallInput = No
Emergency Activate IP = No
EZ/EX Logging = Change
EZ/EX Point Change = 3

SSCC
Gates Used = Yes
SSCCI+2 GPs Coupled = Yes
Min Activation = 20 sec
Rmt Activation Cancel = 3 min
BellOn Gate Rising = No
Mute BellOn Gate Down = No
SSCCIV Controller Used = No

SSCC: 1
SSCC-1 Activation = AND 1 XR
SSCC-1 Gate Delay = 3 sec
SSCC-1 Number of GPs = 1
SSCC-1 Number of GDs = 1
SSCC 1 : Flash Rate = 60
SSCC 1 : Low Battery Detection = No
SSCC 1 : Flash Sync = master
SSCC 1 : Invert Gate Output = No
SSCC 1 : Lamp NeutralTest = Off
Aux-1 Xng CtrlUsed = No

SSCC: 2
SSCC-2 Activation = AND 1 XR
SSCC-2 Gate Delay = 3 sec
SSCC-2 Number of GPs = 0
SSCC-2 Number of GDs = 1
SSCC 2 : Flash Rate = 60
SSCC 2 : Low Battery Detection = No
SSCC 2 : Flash Sync = slave
SSCC 2 : Invert Gate Output = No
SSCC 2 : Lamp NeutralTest = Off
Aux-2 Xng CtrlUsed = No

OUTPUT: assignment page 1
OUT 1.1 = Not Used
OUT 1.2 = Not Used

INPUT: assignment page 1
IN 1.1 = Not Used
IN 1.2 = Not Used

IO: assignment SSCC
OUT GC 1 = Gate Output 1
OUT GC 2 = Gate Output 2
IN 7.1 = AND 1 XR Enable
IN 7.2 = Not Used
IN 7.3 = Not Used
IN 7.4 = GD 1.1
IN 7.5 = GP 1.1
IN 8.1 = Out Of Service IP 1
IN 8.2 = Not Used
IN 8.3 = Not Used
IN 8.4 = GD 2.1
IN 8.5 = Not Used

SEAR
SEAR Subnode = 99
DI 1 = General1
DI 2 = Gnd Flt Tester 1
Rly 1 = Ground Fault Test
Rly 2 = Not Used

SEAR: inputs
SP 2.1 = Not Used
SP 3.1 = Not Used
SP 4.1 = Not Used
SP 5.1 = Not Used
SP 6.1 = Not Used

SEAR: slot 1-4 inputs
IN 1.1 = Not Used
IN 1.2 = Not Used
IN 2.1 = Not Used
IN 2.2 = Not Used
IN 3.1 = Not Used
IN 3.2 = Not Used
IN 4.1 = Not Used
IN 4.2 = Not Used

SEAR: inputs slot 5
IN 5.1 = Not Used
IN 5.2 = Not Used

SEAR: inputs slot 6
IN 6.1 = Not Used
IN 6.2 = Not Used

SEAR: slot 7-8 inputs
IN 7.2 = Not Used
IN 7.3 = Not Used
IN 8.2 = Not Used
IN 8.3 = Not Used
IN 8.5 = General2

SITE: programming
Radio Subnode = 1
Password Access = Off
Low Battery Enabled = Off

Configuration Package File

Filename: 292646V.pac

TEMPLATE MTF_1A

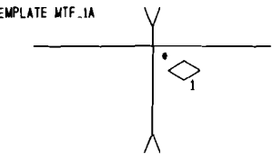

* INDICATES TRACK WITH ISLAND

NOTES:

1) DISTANCE(S) TO BE VERIFIED AT INSTALLATION.
INDICATE SELECTED PROGRAMMED VALUE IF DIFFERENT THAN SHOWN.
REFER TO 4000 GCP INSTRUCTION/INSTALLATION MANUAL
FOR PROGRAMMING PARAMETERS.

2) PROGRAM TEXT HIGHLITED IN RED INDICATES 4000 PROGRAM
MODIFICATIONS TO DEFAULT PROGRAM VALUES.

3) EACH CONSTANT WARNING DEVICE SYSTEM TO BE PROGRAMMED TO
CONVERT TO A MOTION SENSOR 300 FEET FROM EDGE OF ROAD
TRAVELLED WAY.
SHUNT TRACK 300 FEET FROM EDGE OF ROAD TRAVELLED WAY
AND NOTE "EZ" VALUE.
PROGRAM EACH SYSTEM WITH THE INDICATED "EZ" VALUE +2.

4) VERIFY SET TIMER VALUE TO MATCH ACTUAL TRAIN MOVEMENT
WITHIN THE CROSSING APPROACH CIRCUITS.

PROPOSED
DES. No. _____
RED-IN YELLOW-OUT
AS INSTALLED
DATE _____
BY _____

PROPOSED D	M	Y	REVISIONS	D	C	COMPLETED D	M	Y	C

DIVISION MIDWEST
SUB. EFFINGHAM
SD. 1051 C
MP. 168.00 TO 169.25

SIGNALS AND COMMUNICATIONS
EDMONTON, ALBERTA
DES. RLB
15 NOVEMBER 2007
CH. RLC

GCP 4000 NON REDUNDANT
PROGRAM INFORMATION
CH 13 - 2100E
DIETERICH, IL

M 16880C12

SAFETRAN SYSTEM CORP.
LOUISVILLE DIVISION, LOUISVILLE, KY

SAFETRAN SYSTEMS CORPORATION

DES. : RLB	DATE: 11/15/07	JOB NO.: PICA10142	
CKD. : RLC	ISSUE DATE: N/A	EST. NO.: N/A	
DRN. : RLB	PLAN NO.: N/A	SHEET N/A OF N/A	
P TIME: 15:35	P DATE: 19-FEB-2008	CAD ID.: 16880C12	

REVISIONS				
NO.	DATE	BY	DESCRIPTION	APP. BY
1				
2				
3				
4				
5				

TO CONFIGURE SEARII & SEARIII PRESS SITE SETUP KEY. USE ARROW KEYS TO MAKE SELECTION, PRESS ENTER AFTER SELECTION HAS BEEN MADE.

STAGE 1

PROGRAM MENU QUESTIONS	PROGRAM	OPTIONS/RANGE
DATE/TIME?	CURRENT DATE/TIME	CURRENT DATE/TIME
AUTOMATIC DST ADJUSTMENT?	YES	YES, NO
TIME ZONE?	CENTRAL	EASTERN, CENTRAL, MOUNTAIN, PACIFIC, ALASKA, HAWAII, ATLANTIC, SASKATCHEWAN, NEW FOUNLAND
SITE NAME?	CH 13 - 2100E	STREET NAME
MILE POST?	168.80	MILEAGE
DOT/CROSSING IS #?	292 646V	
TESTER TYPE?	CROSSING	CROSSING, WAYSIDE
DATE FORMAT?	dd-mm-yyyy	mm-dd-yyyy, dd-mm-yyyy
TEMPERATURE FORMAT?	FAHRENHEIT	FAHRENHEIT, CELSIUS
SITE TYPE?	NO COM	NO COM, BULLHORN, DIALUP, NODE, COLLECTOR
SITE ATCS ADDRESS?	7.620.100.100.99.01	7.RRR.LLL.GGG.99.01
OFFICE ATCS ADDRESS?		2.RRR.NN.DDDD
(FOR NODE USE) PRIMARY HOP ADDR?		7.RRR.LLL.GGG.00.01
(FOR NODE USE) BACKUP HOP ADDR1?		7.RRR.LLL.GGG.00.01
(FOR NODE USE) BACKUP HOP ADDR2?		7.RRR.LLL.GGG.00.01
(FOR COLLECTOR USE) POLL ID?		1-99
(FOR COLLECTOR USE) MODE?		GEN/ATCS, GENISYS
(FOR COLLECTOR USE) WAMS/XID?		ENABLED, DISABLE
(FOR COLLECTOR USE) OFFICE COMM. DEVICE?		DIRECT (RS232) MCM (RS232) MCM (ECHELON) SREAD SPEC (ECHELON) DIAL MODEM (RS232) S200 RADIO (RS422)
(FOR COLLECTOR USE) OFFICE PHONE NUMBER?		PHONE NUMBER OF WAMS
(FOR COLLECTOR USE) INIT STRING?		OPTIONAL HAYES MODEM INITIALIZATION STRING
FIELD COMM. DEVICE?		VHF COMM. (ECHELON) VHF COMM. (RS232) SPREAD SPEC (ECHELON) SPREAD SPEC (RS232)
USER PORT?	57600, 8, N, 1, N	BAUD, DATA BITS, PARITY, STOP BITS, FLOW CONTROL
AUX PORT?	9600, 8, N, 1, N	BAUD, DATA BITS, PARITY, STOP BITS, FLOW CONTROL

YOU WILL NOW SEE A MESSAGE "PLEASE WAIT COMPILING STAGE 1"
CONTINUE TO NEXT PROGRAM MENU QUESTIONS.

STAGE 2

QUESTION	PROGRAM	SELECTION 1 (MINIMUM)	SELECTION 2 (MAXIMUM)	CONDITION FOR MENU DISPLAY
RESET NAMES / MODULES ?	NO	YES	NO	ALWAYS
RAILROAD NUMBER ?	360 (IC)	1	999	ALWAYS
CROSSING CONFIGURATION	NORMAL	NORMAL	SPLIT GATE (NOTE 2)	ALWAYS
ENTRANCE GATES ?	0 (NOTE 3)	0	8	ALWAYS
GATE POSTION FAIL TIME (SECONDS) ?	N/A	10	60	GATES > 0
BATTERY BANKS ?	2	1	3	ALWAYS
BATT MON USED ?	NO	NO	YES	ALWAYS
INTERNAL CROSSING CONTROLLERS ?	2	0	2	ALWAYS
EXTERNAL CROSSING CONTROLLERS ?	0	0	2	CROSSING CONTROLLER = YES
VHF COMMUNICATOR ?	YES	YES	NO	ALWAYS
DTMF ACTIVATION?	NO	NO	YES	RAILROAD = 360 (IC)
ACTIVATION CODE ?	N/A	1	999	VHF COMMUNICATOR = YES
ACTIVATION TIMEOUT ?	N/A	1	600	VHF COMMUNICATOR = YES
ILOD MODULES ?	2	0	4	ALWAYS
ANY LED BULBS USED ?	YES	NO	YES	ILOD MODULES > 0
AUTO INSPECTION ?	NO	YES	NO	ALWAYS
BELL SENSORS ?	0	0	8	ALWAYS
BELL SENSORS TSS1 ?	N/A	NO	YES	BELL SENSORS > 0
BELL SENSORS TSS2 ?	N/A	NO	YES	BELL SENSORS > 0
BELL SENSORS TSS3 ?	N/A	NO	YES	BELL SENSORS > 0
BELL SENSORS TSS4 ?	N/A	NO	YES	BELL SENSORS > 0
BELL SENSORS TSS5 ?	N/A	NO	YES	BELL SENSORS > 0
BELL SENSORS TSS6 ?	N/A	NO	YES	BELL SENSORS > 0
BELL SENSORS TSS7 ?	N/A	NO	YES	BELL SENSORS > 0
BELL SENSORS TSS8 ?	N/A	NO	YES	BELL SENSORS > 0
BELL ON ?	N/A	GATES LOWERING	GATES MOVING	BELL SENSORS > 0
GFT'S ?	YES	YES	NO	ALWAYS
BATTERIES ON GFT1 ?	2	1	2	GFT'S = YES
GATE TIP SENSORS ?	N/A	YES	NO	GATES > 0
RTU ?	NO	NO	YES	ALWAYS
VHF VOICE CHANNEL ?	1 (NOTE 1)	1	8	VHF COMMUNICATOR = YES
VHF DATA CHANNEL ?	1 (NOTE 1)	1	8	VHF COMMUNICATOR = YES
USE CELL MODEM NON-CRITICAL FEATURE ?	NO	NO	YES	ALWAYS
FULL APPROACH MOVE ALARMS ?	ACTIVATE	ACTIVATE	DO NOT ACTIVATE	ALWAYS

YOU WILL NOW SEE A MESSAGE "PLEASE WAIT COMPILING STAGE 2"
CONTINUE TO NEXT PROGRAM MENU QUESTIONS.

STAGE 3

PROGRAM MENU QUESTIONS	PROGRAM
EDIT DIGITAL INPUTS	NO
EDIT BATTERIES	NO
EDIT RELAYS	NO
EDIT TEST LEDS	NO
EDIT ILOD SENSORS	NO
EDIT VHF SETTINGS	NO
GCP4K ATCS SUBNODE?	16

SAVE CONFIGURATION

NOTES:

1) INDICATE SELECTION IN SPACE PROVIDED.
2) ADDITIONAL OPTIONS: DUAL CROSSING, EXTERNAL ENTRANCE GATE CONTROLLERS.
3) SELECT "0" IF NO GATE TIP AND BELL SENSORS ARE USED.
THUS GATE AND BELL SENSOR RELATED STEPS WILL NOT BE AVAILABLE,
OVERWISE ERRORS IN SEARS RECORDING WILL OCCUR.

PROPOSED
DES. No. _____
RED-IN YELLOW-OUT
AS INSTALLED
DATE _____
BY _____

SEARIII EXECUTIVE SOFTWARE: 9V725-A01U SEARIII APPLICATION SOFTWARE: 9V864-A01L

PROPOSED D	M	Y	REVISIONS	D	C	COMPLETED D	M	Y	C

DIVISION MIDWEST
SUB. EFFINGHAM
SD. 1051 C
MP. 168.00 TO 169.25

SIGNALS AND COMMUNICATIONS EDMONTON, ALBERTA — DES. RLB
15 NOVEMBER 2007 — CH. RLC

SEARIII
SETUP AND PROGRAM
CH 13 - 2100E
DIETERICH, IL

M 16880C13

SAFETRAN SYSTEM CORP.
LOUISVILLE DIVISION, LOUISVILLE, KY

SAFETRAN SYSTEMS CORPORATION

DES.: RLB	DATE: 11/15/07	JOB NO.: PICA10142	
CKD.: RLC	ISSUE DATE: N/A	EST. NO.: N/A	
DRN.: RLB	PLAN NO.: N/A	SHEET N/A OF N/A	
P TIME: 15:35	P DATE: 19-FEB-2008	CAD ID.: 16880C13	

NO.	DATE	BY	DESCRIPTION	APP. BY
1				
2				
3				
4				
5				

REVISIONS

CALIBRATION HISTORY

INITIAL SET UP BY: _____ DATE: _____

DC VOLTAGE READINGS AFTER CALIBRATION				CALIBRATION HISTORY										LINEARIZATION HISTORY (NOTE 1)							
				EZ/EX VALUES (TRACK UNOCCUPIED)				HARD WIRE SHUNT AT TERMINATION SHUNT						HARD WIRE SHUNT AT 50 PERCENT POINT OF SHUNT							
				EZ		EX		EZ		EX		50 PERCENT OF EZ VALUE		NO LINEARIZATION				LINEARIZATION COMPLETE			
														EZ		EX		STEP±		EZ	
				NRML	STBY	NRML	STBY	NRML	STBY	NRML	STBY	NRML	STBY	NRML	STBY	NRML	STBY	NRML	STBY	NRML	STBY
T1	Z1=	WEST	TRACK 1																		
	Z2=	EAST	TRACK 1																		

CALIBRATION HISTORY

INITIAL SET UP BY: _____ DATE: _____

DC VOLTAGE READINGS AFTER CALIBRATION				CALIBRATION HISTORY										LINEARIZATION HISTORY (NOTE 1)							
				EZ/EX VALUES (TRACK UNOCCUPIED)				HARD WIRE SHUNT AT TERMINATION SHUNT						HARD WIRE SHUNT AT 50 PERCENT POINT OF SHUNT							
				EZ		EX		EZ		EX		50 PERCENT OF EZ VALUE		NO LINEARIZATION				LINEARIZATION COMPLETE			
														EZ		EX		STEP±		EZ	
				NRML	STBY	NRML	STBY	NRML	STBY	NRML	STBY	NRML	STBY	NRML	STBY	NRML	STBY	NRML	STBY	NRML	STBY
T1	Z1=	WEST	TRACK 1																		
	Z2=	EAST	TRACK 1																		

CALIBRATION HISTORY

INITIAL SET UP BY: _____ DATE: _____

DC VOLTAGE READINGS AFTER CALIBRATION				CALIBRATION HISTORY										LINEARIZATION HISTORY (NOTE 1)							
				EZ/EX VALUES (TRACK UNOCCUPIED)				HARD WIRE SHUNT AT TERMINATION SHUNT						HARD WIRE SHUNT AT 50 PERCENT POINT OF SHUNT							
				EZ		EX		EZ		EX		50 PERCENT OF EZ VALUE		NO LINEARIZATION				LINEARIZATION COMPLETE			
														EZ		EX		STEP±		EZ	
				NRML	STBY	NRML	STBY	NRML	STBY	NRML	STBY	NRML	STBY	NRML	STBY	NRML	STBY	NRML	STBY	NRML	STBY
T1	Z1=	WEST	TRACK 1																		
	Z2=	EAST	TRACK 1																		

NOTE:

1) **SET UP APPROACH LENGTH AND LINEARIZATION CALIBRATION**
VERIFY THAT "ENHANCED DETECTION" MODE IS PROGRAMMED "OFF" BEFORE ATTEMPTING LINEARIZATION PROCEDURES.

PROPOSED
DES. No. _____
RED-IN YELLOW-OUT
AS INSTALLED
DATE _____
BY _____

6' X 6' BUNGALOW

PROPOSED D	M	Y	REVISIONS	D	C	COMPLETED D	M	Y	C

DIVISION MIDWEST
SUB. EFFINGHAM
SD. 1051 C
WP. 168.00 TO 169.25

SIGNALS AND COMMUNICATIONS EDMONTON, ALBERTA
15 NOVEMBER 2007
DES. RLB
CH. RLC

GCP 4000
CALIBRATION HISTORY
CH 13 - 2100E
DIETERICH, IL

M 16880C14

SAFETRAN SYSTEM CORP.
LOUISVILLE DIVISION, LOUISVILLE, KY

SAFETRAN SYSTEMS CORPORATION

DES.: RLB	DATE: PTCA1014	JOB NO.: PTCA1014-2	
CKD.: RLC	ISSUE DATE: N/A	EST. NO.: N/A	
DRN.: RLB	PLAN NO.: N/A	SHEET N/A OF N/A	
P. TIME: 15:35	P. DATE: 19-FEB-2008	CAD ID.: 16880C14	