1

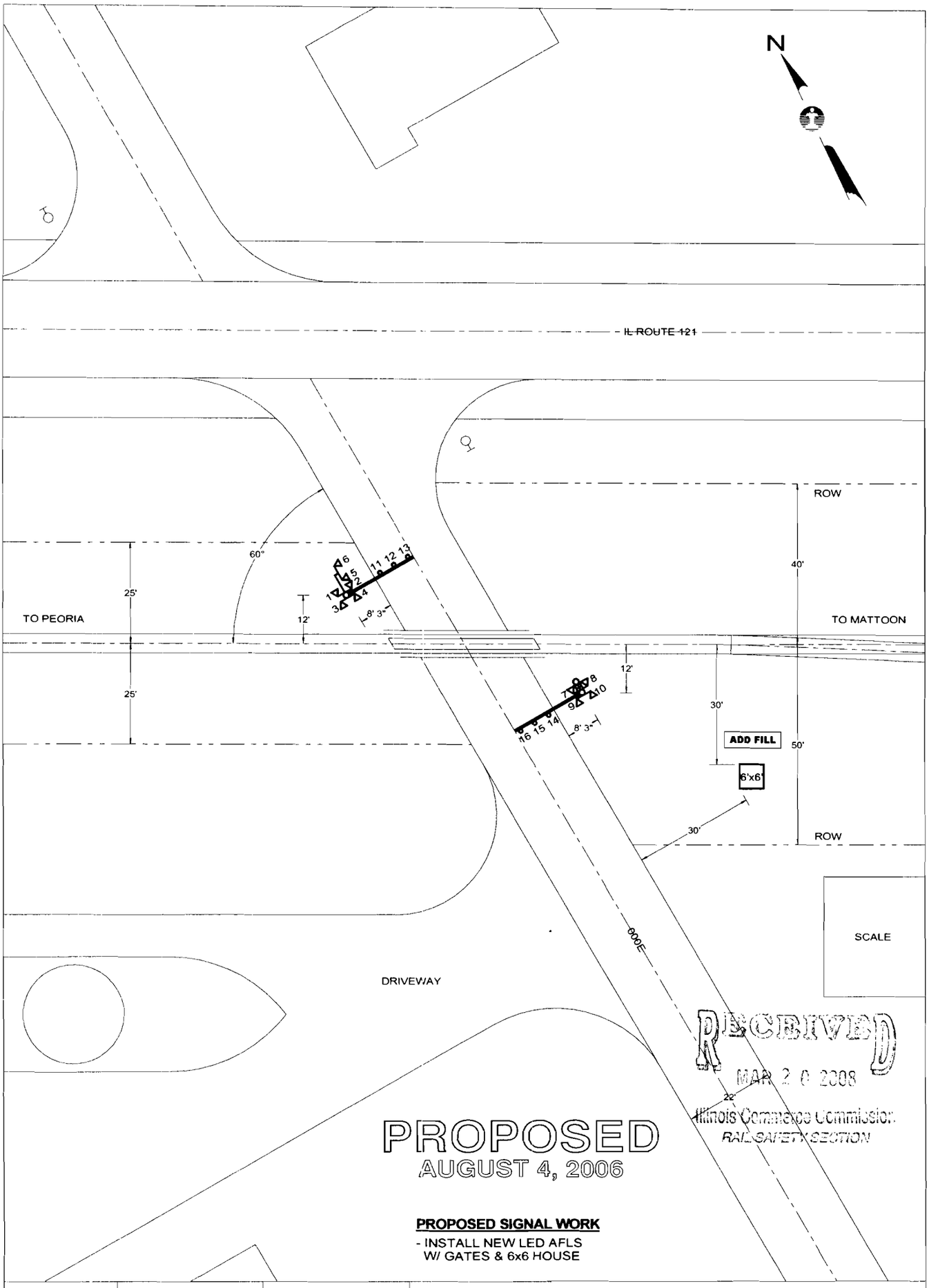

RECEIVED
MAR 2 0 2008
Illinois Commerce Commission
RAIL SAFETY SECTION

QUADRANT	NW	SE
STANDARD AFLS	LED	LED
CANTILEVER, FT.	-	-
GATE, FT.	20	20
ADDED LIGHTS	90 °	-
BARRICADE	-	-
MULTI-TK SIGN	-	-
BELL	-	X
REVISIONS		

E:\DWG\PEO\11340X.CAD

CN

SIGNALS & COMMUNICATIONS, ENGINEERING DEPARTMENT

CITY & STATE	COLES, IL	SD	1047 X
CROSSING	TR 4 / 000E	DATE	AUGUST 4, 2006
IC -	113.40-B	DOT -	292 941A
MIDWEST	DIVISION	PEORIA	SUBDIVISION
IN SERVICE		SCALE 1"=30'	DRAWN BY AVS

SD 1047 - MP 113 TO 114

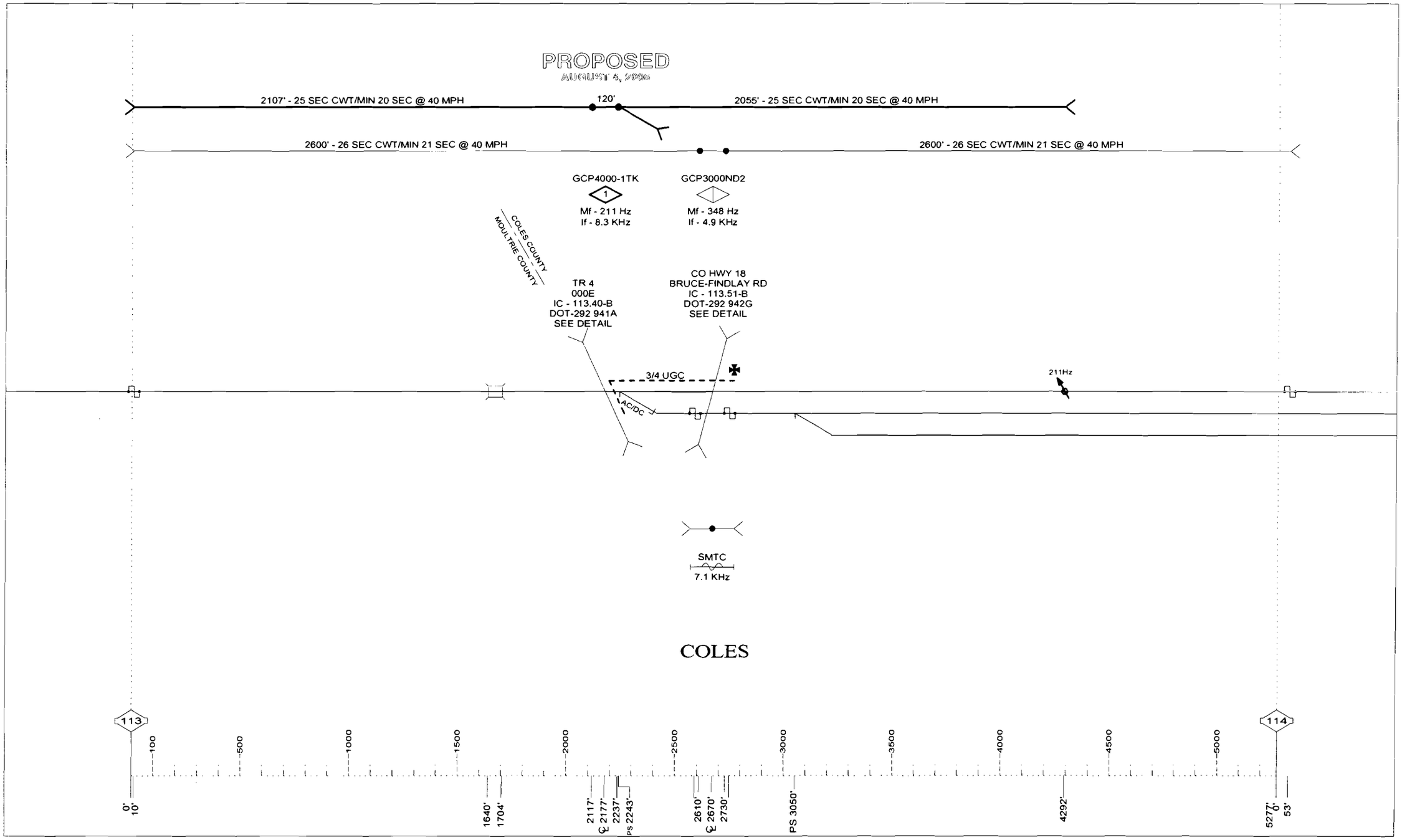

DRAWING SCALE 1" = 500'

6-18-98

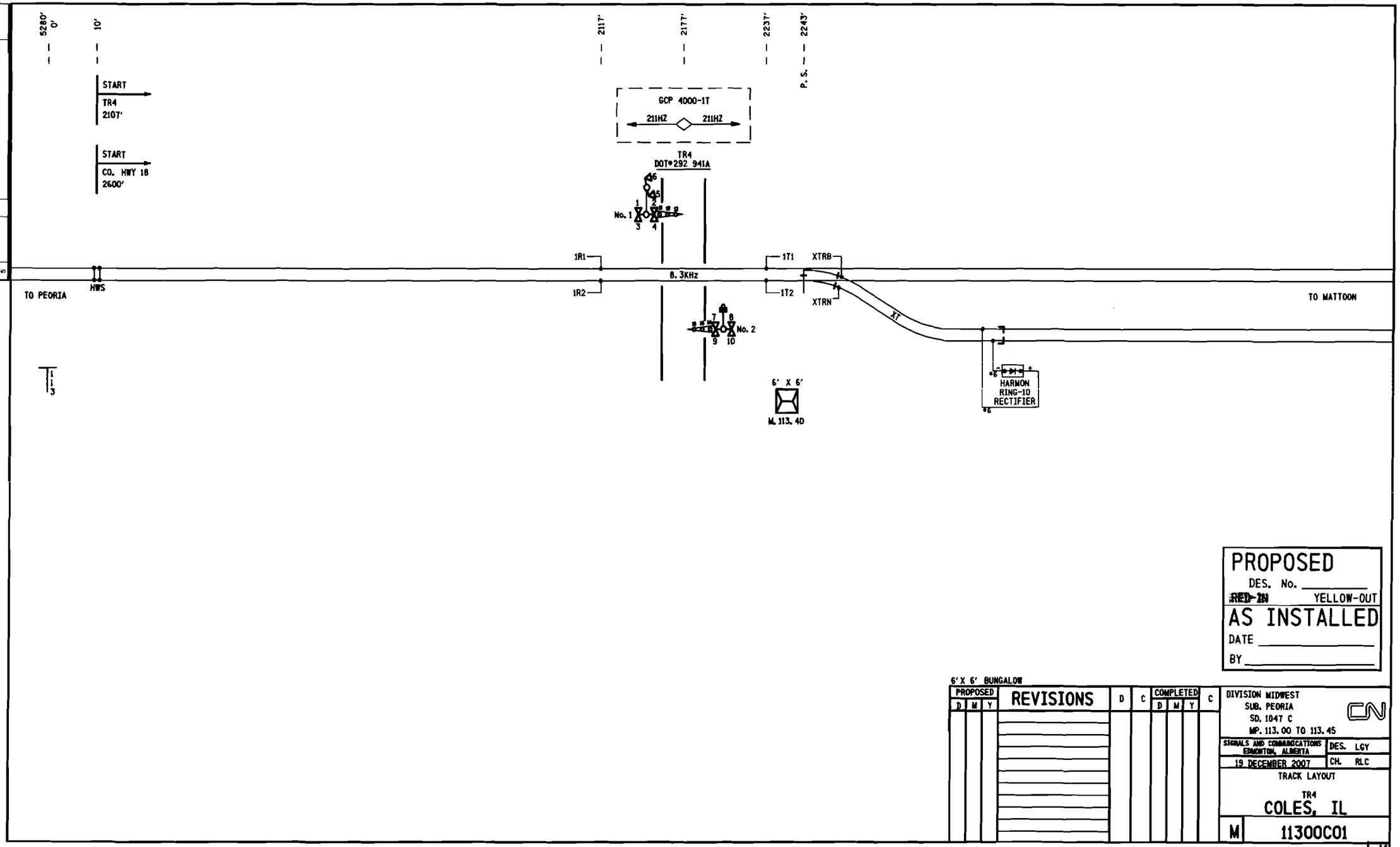

NO.	DATE	BY	REVISIONS DESCRIPTION	APP. BY
1				
2				
3				
4				
5				

SAFETRAN SYSTEMS CORPORATION

DES. : LGY	DATE: 12/19/07	JOB NO. : PICA10134
CKD. : RLC	ISSUE DATE: N/A	EST. NO. : N/A
DRN. : LGY	PLAN NO. : N/A	SHEET N/A OF N/A
P. TIME: 07:52	P. DATE: 04-MAR-2008	CAD ID. : 11300C01

PROPOSED
DES. No. _____
~~RED-IN~~ YELLOW-OUT

AS INSTALLED
DATE _____
BY _____

PROPOSED D	M	Y	REVISIONS	D	C	COMPLETED D	M	Y	C

DIVISION MIDWEST
SUB. PEORIA
SD. 1047 C
MP. 113.00 TO 113.45

SIGNALS AND COMMUNICATIONS
EDMONTON, ALBERTA

DES. LGY
CH. RLC

19 DECEMBER 2007

TRACK LAYOUT

TR4
COLES, IL

M 11300C01

SAFETRAN SYSTEM CORP.
LOUISVILLE DIVISION, LOUISVILLE, KY

14

NO.	DATE	BY	DESCRIPTION	APP. BY
1				
2				
3				
4				
5				

REVISIONS

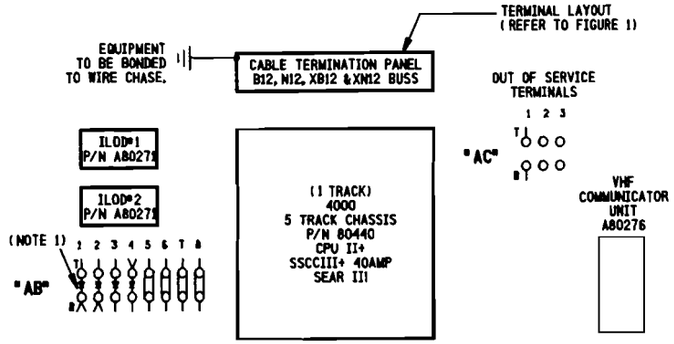

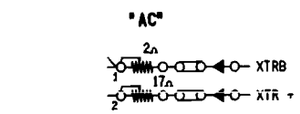

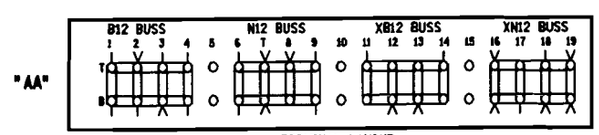

TERMINAL LAYOUT
FIGURE 1

NOTE:
1) ⊸ DENOTES RECTIFIER : (SAFETRAN# 8008A299006)

SIDE "A"

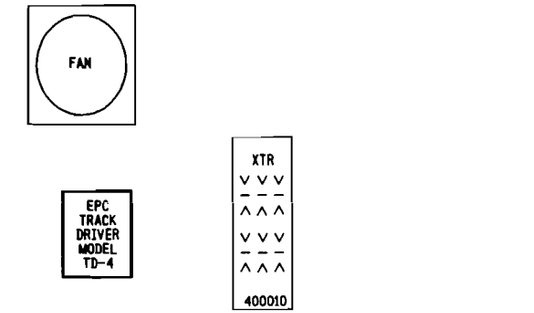

115V AC
RECEPTACLE

PLAN SHELF

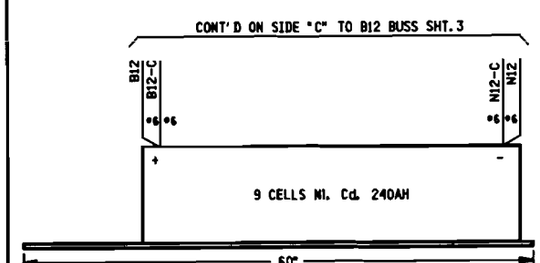

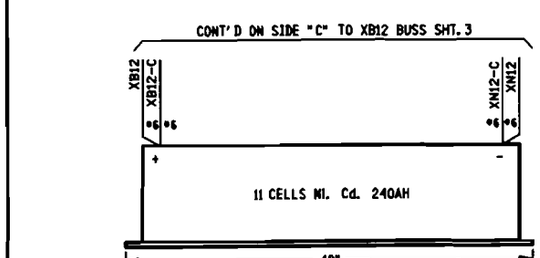

SIDE "B"

PROPOSED
DES. No. _____
RED-IN YELLOW-OUT
AS INSTALLED
DATE _____
BY _____

6' X 6' BUNGALOW

PROPOSED D	M	Y	REVISIONS	D	C	COMPLETED D	M	Y	C

DIVISION MIDWEST
SUB. PEORIA
SD. 1047 C
MP. 113.00 TO 113.45

CN

SIGNALS AND COMMUNICATIONS
EDMONTON, ALBERTA
DES. LGY
19 DECEMBER 2007
CH. RLC

BUNGALOW LAYOUT
SIDE "A" & "B"
TR4
COLES, IL

M 11300C02

SAFETRAN SYSTEM CORP.
LOUISVILLE DIVISION, LOUISVILLE, KY

SAFETRAN SYSTEMS CORPORATION

DES.: LGY	DATE: 12/19/07	JOB NO.: PICA10134	
CKD.: RLC	ISSUE DATE: N/A	EST. NO.: N/A	
DRN.: LGY	PLAN NO.: N/A	SHEET N/A OF N/A	
P TIME: 07:52	P DATE: 04-MAR-2008	CAD ID.: 11300C02	

NO.	DATE	BY	DESCRIPTION	APP. BY
1				
2				
3				
4				
5				

REVISIONS

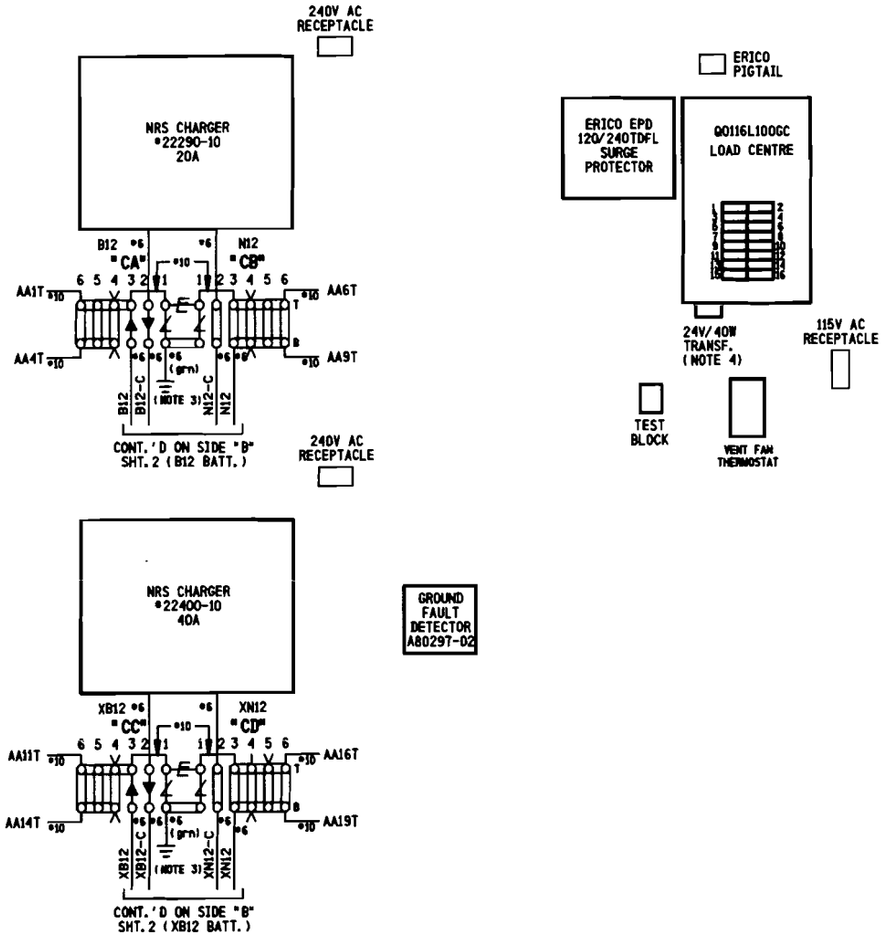

NOTES:

1) ⏚ DENOTES EQUALIZER TYPE:(SAFETRAN #022700-1X)
2) ⊥ DENOTES LIGHTNING ARRESTER TYPE:(SAFETRAN #022585-1X)
3) SURGE PROTECTION SHOULD BE BONDED TO BUNGALOW.
4) 24V-40W TRANSFORMER (CN STOCK #02-45-367)

SIDE "C"

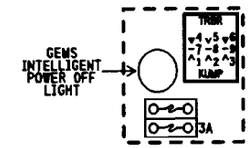

POWER OFF INDICATOR LIGHT REPEATER RELAY JUNCTION BOX. (REFER TO PS-907 SHT. 2A)

PROPOSED
DES. No. _____
RED-IN YELLOW-OUT
AS INSTALLED
DATE _____
BY _____

SIDE "D"
ABOVE ENTRY DOOR

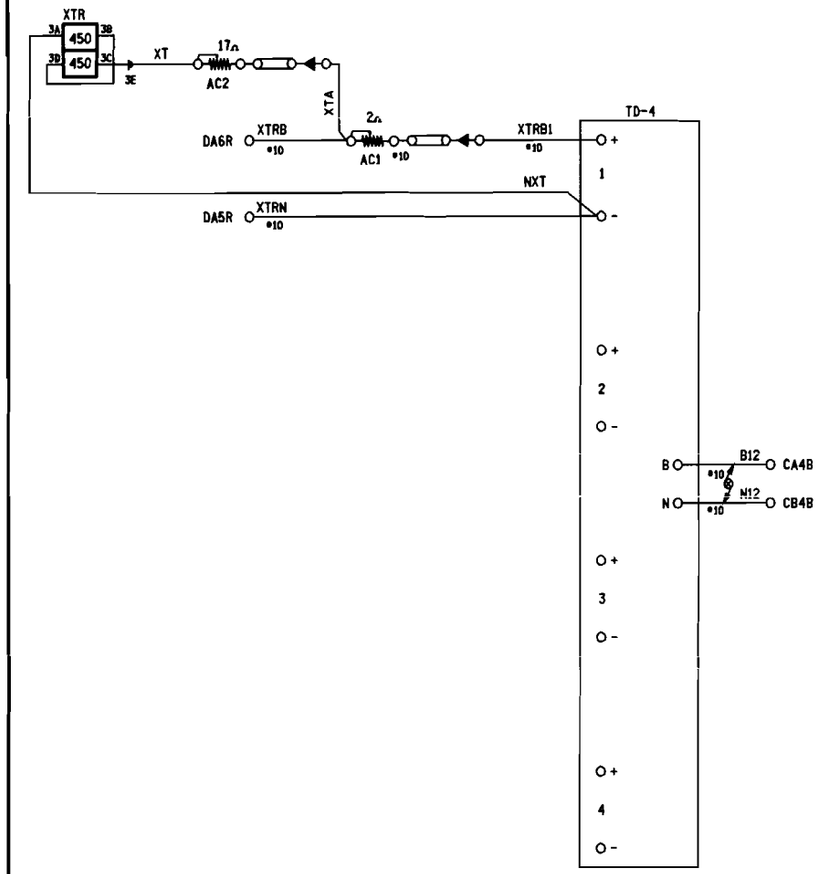

NOTE:
ALL WIRING #16 AWG UNLESS OTHERWISE NOTED

6' X 6' BUNGALOW

PROPOSED D	M	Y	REVISIONS	D	C	COMPLETED D	M	Y	C

DIVISION MIDWEST
SUB. PEORIA
SD. 1047 C
MP. 113.00 TO 113.45

SIGNALS AND COMMUNICATIONS EDMONTON, ALBERTA — DES. LGY
19 DECEMBER 2007 — CH. RLC

BUNGALOW LAYOUT
SIDE "C" & OVER DOOR SIDE "D"
TR4
COLES, IL

M 11300C03

SAFETRAN SYSTEM CORP.
LOUISVILLE DIVISION, LOUISVILLE, KY

SAFETRAN SYSTEMS CORPORATION

DES. : LGY	DATE: 12/19/07	JOB NO. : PICA10134	
CKD. : RLC	ISSUE DATE: N/A	EST. NO. :N/A	
DRN. : LGY	PLAN NO. :N/A	SHEET N/A OF N/A	
P TIME: 07:52	P. DATE: 04-MAR-2008	CAD ID. : 11300C03	

NO.	DATE	BY	DESCRIPTION	APP. BY
1				
2				
3				
4				
5				

REVISIONS

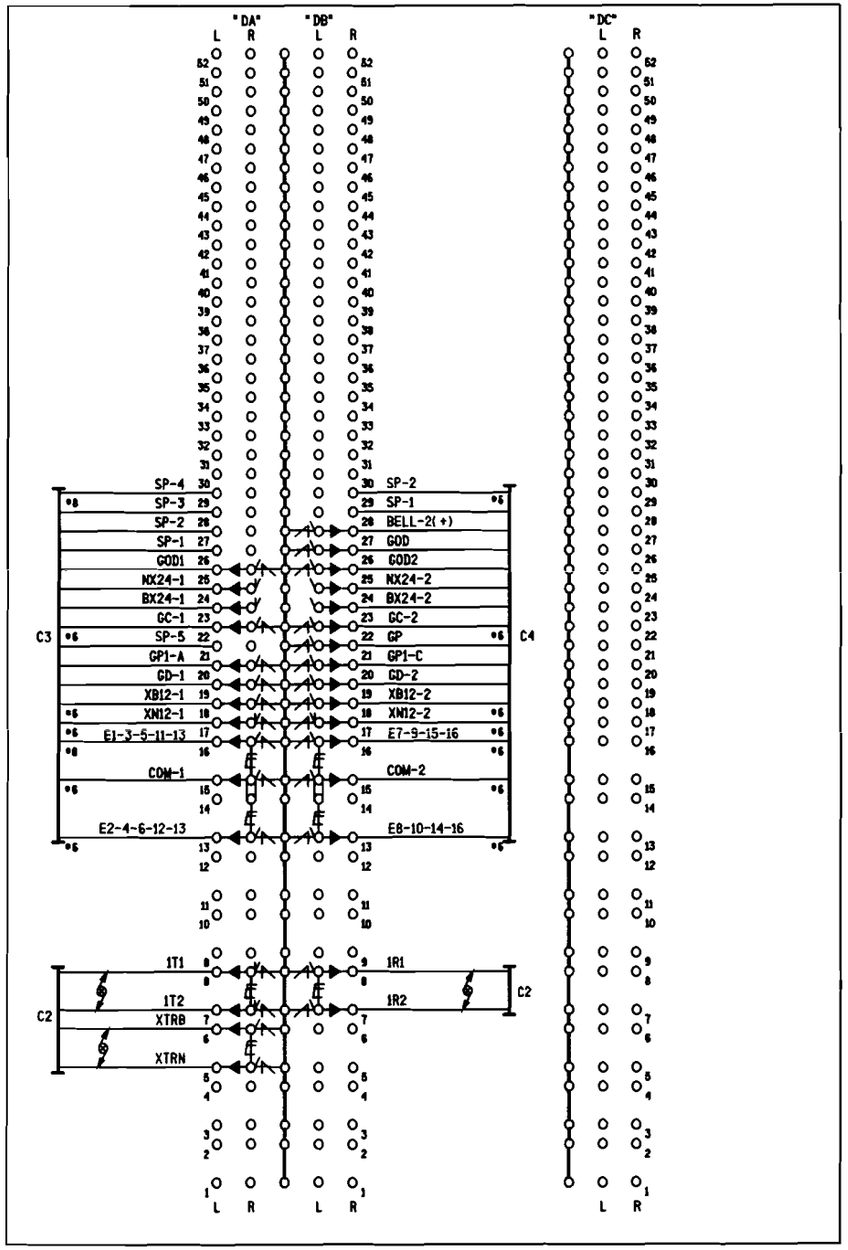

SIDE "D" (INSIDE)

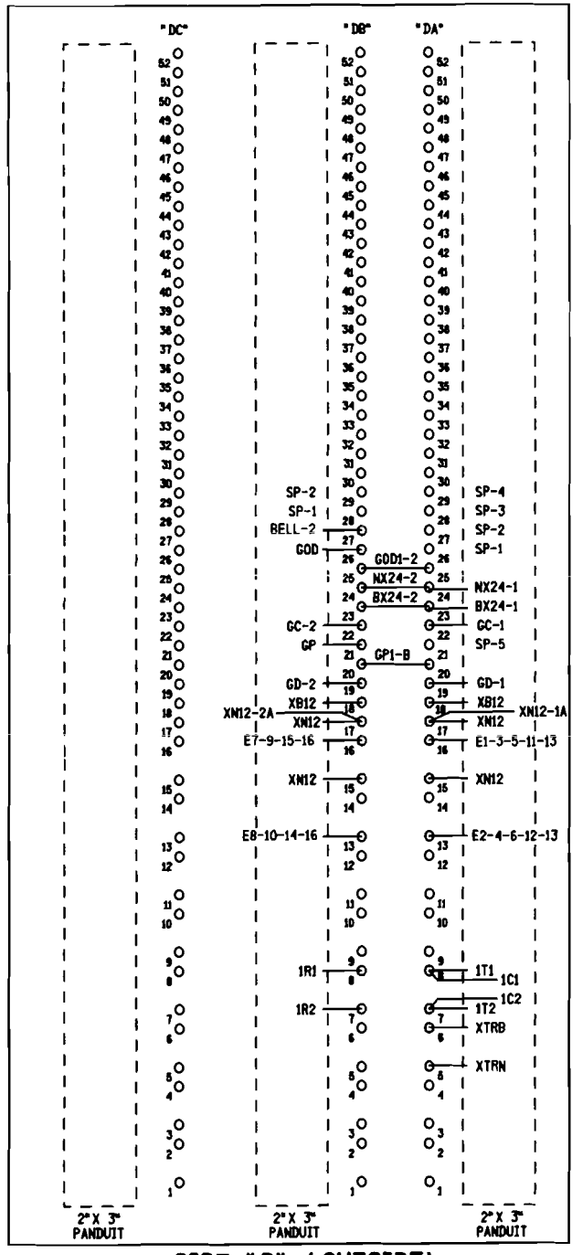

SIDE "D" (OUTSIDE)

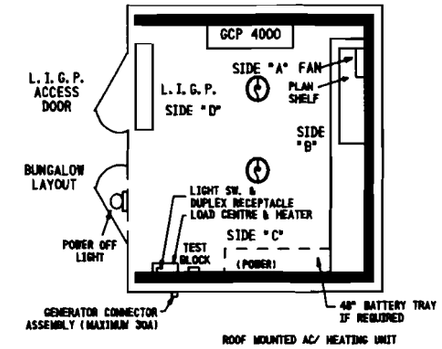

CABLE CONSIST:

C1-3C#4 TC-THHN U/G TO POWER TAP AT CH18
C2-(3)-2SC#6 TW. TO TRACK
C3-16C (7#6, 9#14) TO GATE (SIG.#1)
C4-16C (7#6, 9#14) TO GATE (SIG.#2)

NOTES:

1) DENOTES LIGHTNING ARRESTER TYPE:(SAFETRAN #022585-1X)
2) DENOTES EQUALIZER TYPE:(SAFETRAN #022700-1X)
3) DENOTES TWISTED PAIR.
4) ENSURE DOUBLE NUTTING OF ALL TERMINALS.

PROPOSED
DES. No. _____
RED-IN YELLOW-OUT
AS INSTALLED
DATE _____
BY _____

6' X 6' BUNGALOW

PROPOSED D	PROPOSED M	PROPOSED Y	REVISIONS	D	C	COMPLETED D	COMPLETED M	COMPLETED Y	C

DIVISION MIDWEST
SUB. PEORIA
SD. 1047 C
MP. 113.00 TO 113.45

SIGNALS AND COMMUNICATIONS
EDMONTON, ALBERTA
19 DECEMBER 2007
DES. LGY
CH. RLC

BUNGALOW LAYOUT SIDE "D"
LOW IMPEDANCE GROUND PLANE
TR4
COLES, IL

M 11300C04

SAFETRAN SYSTEM CORP.
LOUISVILLE DIVISION, LOUISVILLE, KY

SAFETRAN SYSTEMS CORPORATION	
DES. : LGY	DATE: 12/19/07
CKD. : RLC	ISSUE DATE: N/A
DRN. : LGY	PLAN NO. :N/A
P. TIME:07:52	P. DATE: 04-MAR-2008
JOB NO. : PICA10134	
EST. NO. :N/A	
SHEET N/A OF N/A	
CAD ID. : 11300C04	

REVISIONS				
NO.	DATE	BY	DESCRIPTION	APP. BY
1				
2				
3				
4				
5				

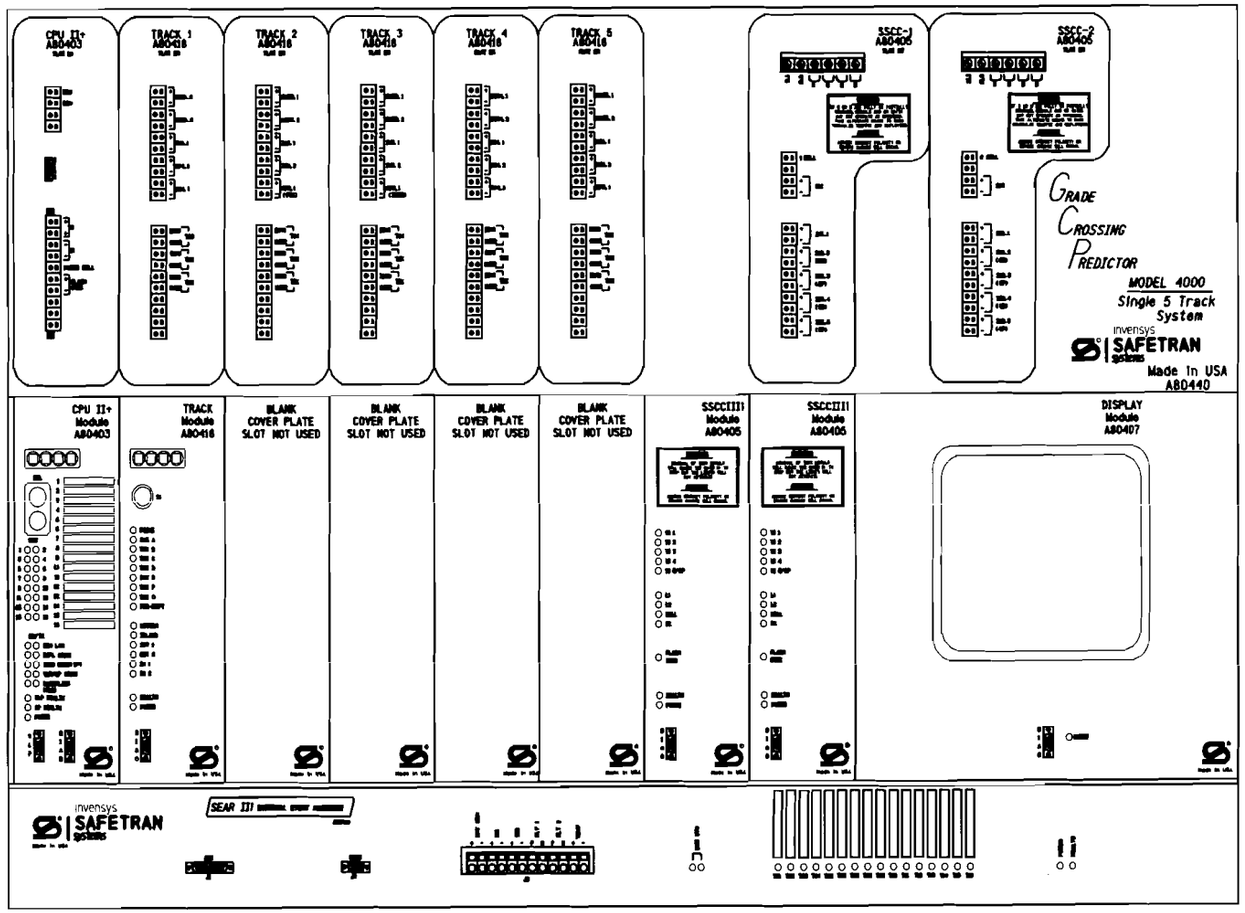

NOTE:

1) DISABLE THE DISPLAY HEATER BY REMOVING JUMPER J-22 (LOCATED AT THE EDGE OF THE DISPLAY MODULE CARD THAT PLUGS INTO THE CHASSIS).

ATTENTION!

ENSURE THE DISPLAY MODULE HEATER IS DISABLED. LEAVING THE DISPLAY HEATER ENABLE WILL REDUCE THE AMOUNT OF BATTERY STANDBY TIME IN THE EVENT OF AN AC POWER FAILURE.

HEATER FUNCTION IS
JUMPER SELECTABLE ON
THE DISPLAY MODULE BOARD.
THREE OPTIONS ARE AVAILABLE.
NORMAL LCD HTR (DEFAULT)
HI CURRENT
NO JUMPER (HEATER DISABLED)

PROPOSED
DES. No. _____
RED-IN YELLOW-OUT
AS INSTALLED
DATE _____
BY _____

6' X 6' BUNGALOW

PROPOSED			REVISIONS	D	C	COMPLETED			C
D	M	Y				D	M	Y	

DIVISION MIDWEST
SUB. PEORIA
SD. 1047 C
MP. 113.00 TO 113.45
CN

SIGNALS AND COMMUNICATIONS EDMONTON, ALBERTA
DES. LGY
19 DECEMBER 2007
CH. RLC

GCP 4000 NON REDUNDANT
5 TRK CHASSIS & MOD. LAYOUT
TR4
COLES, IL

M 11300C05

SAFETRAN SYSTEM CORP.
LOUISVILLE DIVISION, LOUISVILLE, KY

SAFETRAN SYSTEMS CORPORATION			
DES. : LGY	DATE: 12/19/07	JOB NO. : PICA10134	
CKD. : RLC	ISSUE DATE: N/A	EST. NO. :N/A	
DRN. : LGY	PLAN NO. :N/A	SHEET N/A OF N/A	
P. TIME: 07:52	P. DATE: 04-MAR-2008	CAD ID. : 11300C05	

NO.	DATE	BY	DESCRIPTION	APP. BY
1				
2				
3				
4				
5				

REVISIONS

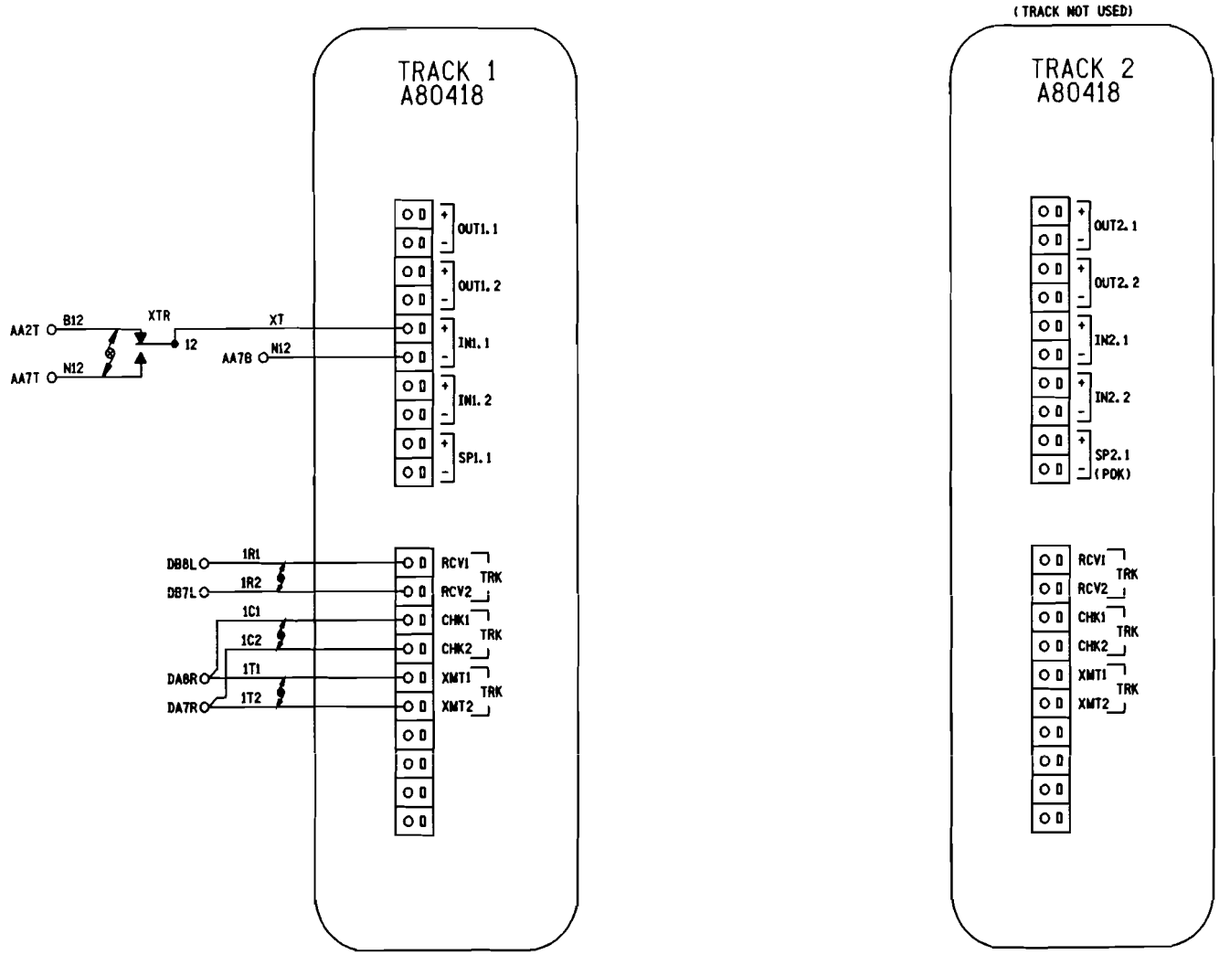

NOTES:

1) ALL WIRING #16 AWG MINIMUM UNLESS OTHERWISE NOTED. WIRE SIZES SHOWN ARE MINIMUM GAUGE.

2) DENOTES TWISTED PAIR.

PROPOSED
DES. No. _____
RED-IN YELLOW-OUT
AS INSTALLED
DATE _____
BY _____

6' X 6' BUNGALOW

PROPOSED D	PROPOSED M	PROPOSED Y	REVISIONS	D	C	COMPLETED D	COMPLETED M	COMPLETED Y	C

DIVISION MIDWEST
SUB. PEORIA
SD. 1047 C
MP. 113.00 TO 113.45

SIGNALS AND COMMUNICATIONS
EDMONTON, ALBERTA

DES. LGY
CH. RLC

19 DECEMBER 2007

GCP 4000 NON REDUNDANT
TRACK CONNECTIONS
TR4

COLES, IL

M 11300C06

SAFETRAN SYSTEM CORP.
LOUISVILLE DIVISION, LOUISVILLE, KY

SAFETRAN SYSTEMS CORPORATION

DES. : LGY	DATE: 12/19/07	JOB NO. : P1CA10134	
CKD. : RLC	ISSUE DATE: N/A	EST. NO. :N/A	
DRN. : LGY	PLAN NO. :N/A	SHEET N/A OF N/A	
P TIME:07:52	P DATE: 04-MAR-2008	CAD ID. : 11300C06	

NO.	DATE	BY	DESCRIPTION	APP. BY
1				
2				
3				
4				
5				

REVISIONS

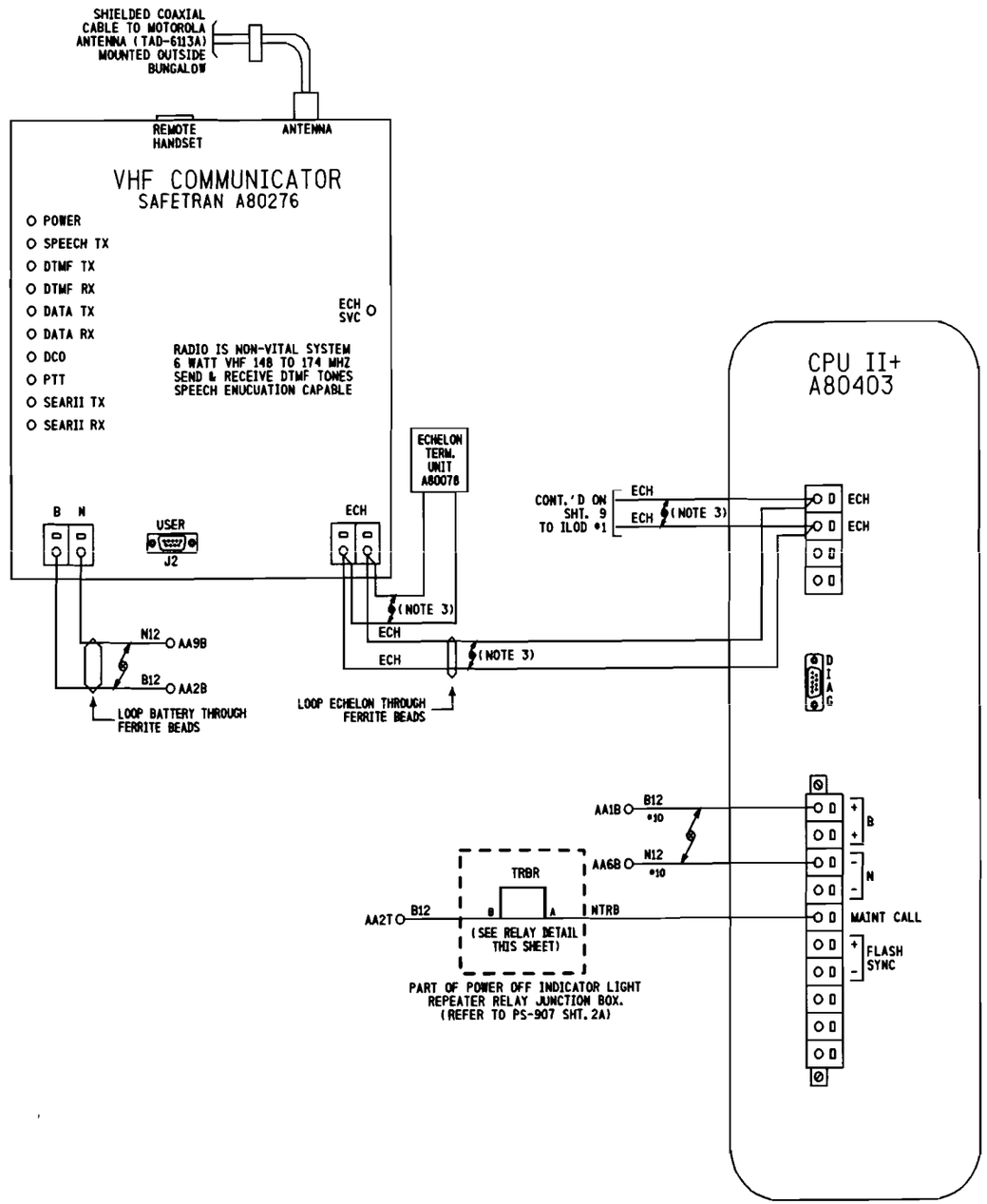

RELAY DETAIL

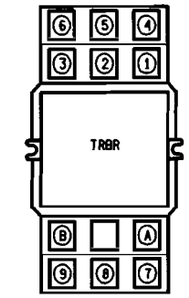

LOCATED OVER ENTRY DOOR

RELAY - POTTER & BRUMFIELD
MODEL KUMP-14D1B-12 SOCKET MOUNTABLE
12 VDC W/ 3 FORM C CONTACTS.

SOCKET - SCREW TERMINAL
MODEL 27E121.

RELAY WIRING DIAGRAM (REAR VIEW)

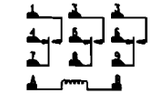

NOTE:
SOCKET NUMBERING CORRESPONDS DIRECTLY WITH RELAY NUMBERING.
(COIL SHOWN ENERGIZED)

NOTES:

1) ALL WIRING #16 AWG UNLESS OTHERWISE NOTED.

2) ∮ DENOTES TWISTED PAIR.

3) USE BELDEN CABLE, PART #8461-u500-60 FOR ALL ECHELON AND LAN WIRING.

PROPOSED
DES. No. _____
RED-IN YELLOW-OUT
AS INSTALLED
DATE _____
BY _____

6' X 6' BUNGALOW

PROPOSED D	PROPOSED M	PROPOSED Y	REVISIONS	D	C	COMPLETED D	COMPLETED M	COMPLETED Y	C

DIVISION MIDWEST
SUB. PEORIA
SD. 1047 C
MP. 113.00 TO 113.45

CN

SIGNALS AND COMMUNICATIONS EDMONTON, ALBERTA — DES. LGY
19 DECEMBER 2007 — CH. RLC

SAFETRAN INTERNAL EVENT ANALYZER
CPUII+ & VHF COMMUNICATOR
TR4
COLES, IL

M 11300C07

SAFETRAN SYSTEM CORP.
LOUISVILLE DIVISION, LOUISVILLE, KY

SAFETRAN SYSTEMS CORPORATION

DES.: LGY	DATE: 12/19/07	JOB NO.: P1CA10134	
CKD.: RLC	ISSUE DATE: N/A	EST. NO.:	
DRN.: LGY	PLAN NO.: N/A	SHEET N/A OF N/A	
P TIME: 07:52	P DATE: 04-MAR-2008	CAD ID.: 11300C07	

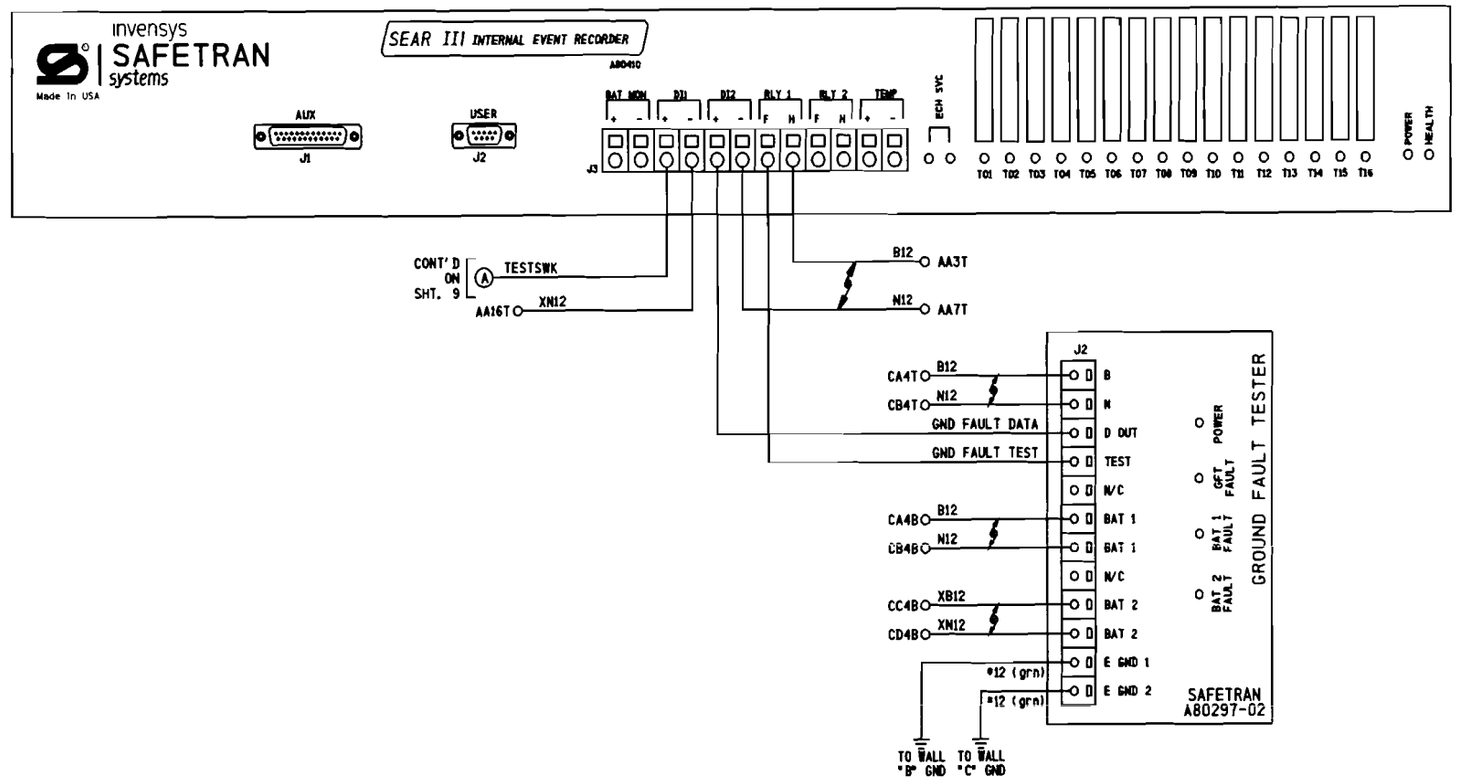

NO.	DATE	BY	DESCRIPTION	APP. BY
1				
2				
3				
4				
5				

REVISIONS

SAFETRAN SYSTEMS CORPORATION			
DES.: LGY	DATE: 12/19/07	JOB NO.: PICA10134	
CKD.: RLC	ISSUE DATE: N/A	EST. NO.:	
DRN.: LGY	PLAN NO.: N/A	SHEET N/A OF N/A	
P TIME: 07:52	P DATE: 04-MAR-2008	CAD ID.: 11300C08	

NOTES:

1) ALL WIRING #16 AWG UNLESS OTHERWISE NOTED.

2) DENOTES TWISTED PAIR.

PROPOSED
DES. No. _____
RED-IN YELLOW-OUT
AS INSTALLED
DATE _____
BY _____

6' X 6' BUNGALOW

PROPOSED D	M	Y	REVISIONS	D	C	COMPLETED D	M	Y	C

DIVISION MIDWEST
SUB. PEORIA
SD. 1047 C
MP. 113.00 TO 113.45

CN

SIGNALS AND COMMUNICATIONS EDMONTON, ALBERTA

DES. LGY

19 DECEMBER 2007

CH. RLC

SAFETRAN INTERNAL EVENT ANALYZER
SEARIII WITH GFT
TR4
COLES, IL

M 11300C08

SAFETRAN SYSTEM CORP.
LOUISVILLE DIVISION, LOUISVILLE, KY

NO.	DATE	BY	DESCRIPTION	APP. BY
1				
2				
3				
4				
5				

REVISIONS

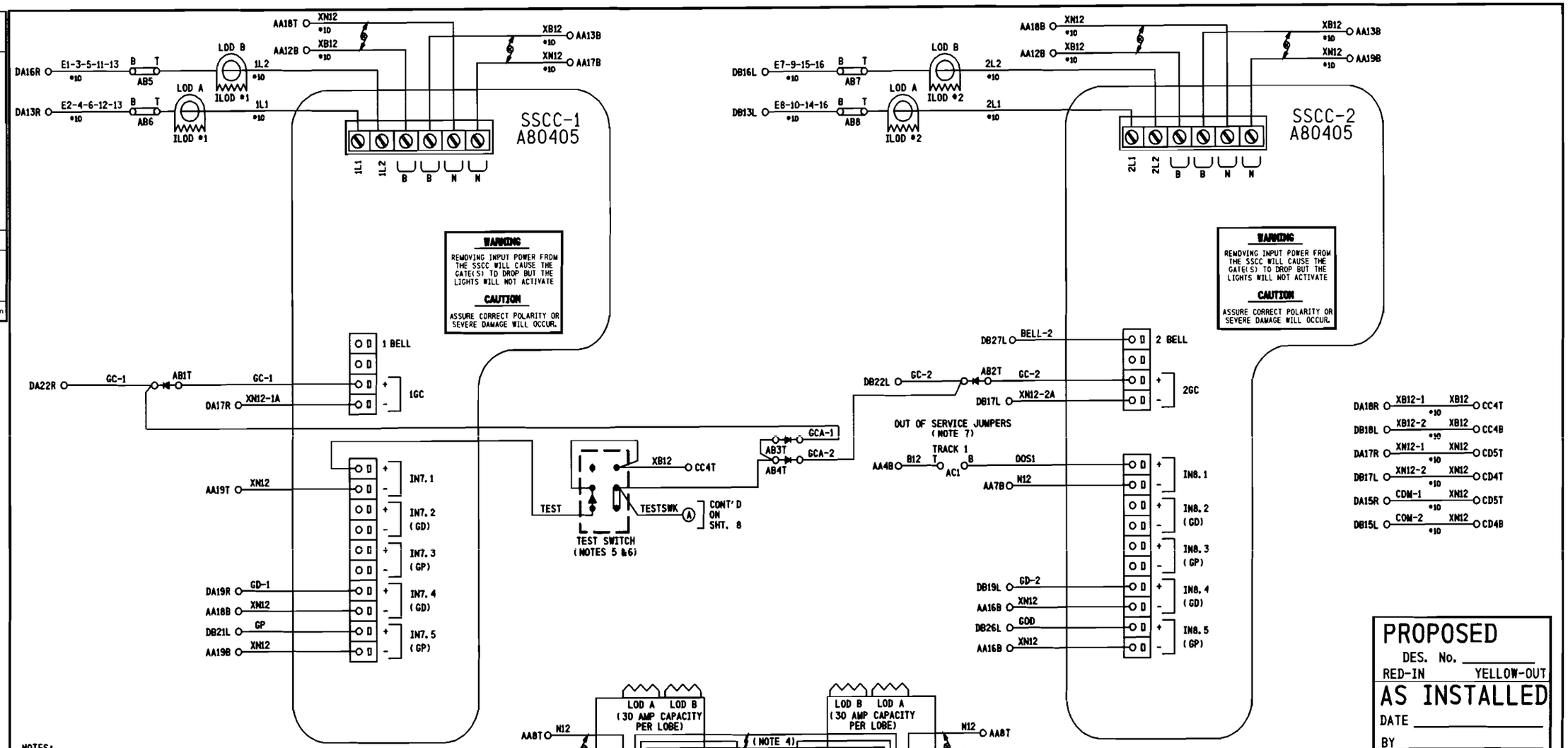

NOTES:

1) DENOTES RECTIFIER : (SAFETRAN #8008A299006)

2) DENOTES TWISTED PAIR.

3) ALL WIRING TO BE #16 AWG MINIMUM UNLESS OTHERWISE NOTED.

4) USE BELDEN CABLE, PART #8461-u500-60 FOR ALL ECHELON AND LAN WIRING.

5) MULTI-UNIT TERMINAL BLOCK

6) IF LINK IS CONNECTED BETWEEN XB12 AND TESTSWK TERMINAL GATES WILL REMAIN IN UP POSTION.

7) TO TAKE TRACK 1 (T1) OUT OF SERVICE, JUMPER AC1T TO AC1B

PROPOSED
DES. No. _____
RED-IN YELLOW-OUT
AS INSTALLED
DATE _____
BY _____

6' X 6' BUNGALOW

PROPOSED D	M	Y	REVISIONS	D	C	COMPLETED D	M	Y	C

DIVISION MIDWEST
SUB. PEORIA
SD. 1047 C
MP. 113.00 TO 113.45

SIGNALS AND COMMUNICATIONS EDMONTON, ALBERTA | DES. LGY
19 DECEMBER 2007 | CH. RLC

GCP 4000 SSCC3+ MODULE
ISOLATED GATE 40AMP CONTROLLER
TR4

COLES, IL

M 11300C09

SAFETRAN SYSTEM CORP.
LOUISVILLE DIVISION, LOUISVILLE, KY

SAFETRAN SYSTEMS CORPORATION

DES. : LGY	DATE : 12/19/07	JOB NO. : PICA10134	
CKD. : RLC	ISSUE DATE : N/A	EST. NO. :N/A	
DRN. : LGY	PLAN NO. :N/A	SHEET N/A OF N/A	
P TIME : 07:52	P DATE : 04-MAR-2008	CAD ID. : 11300C09	

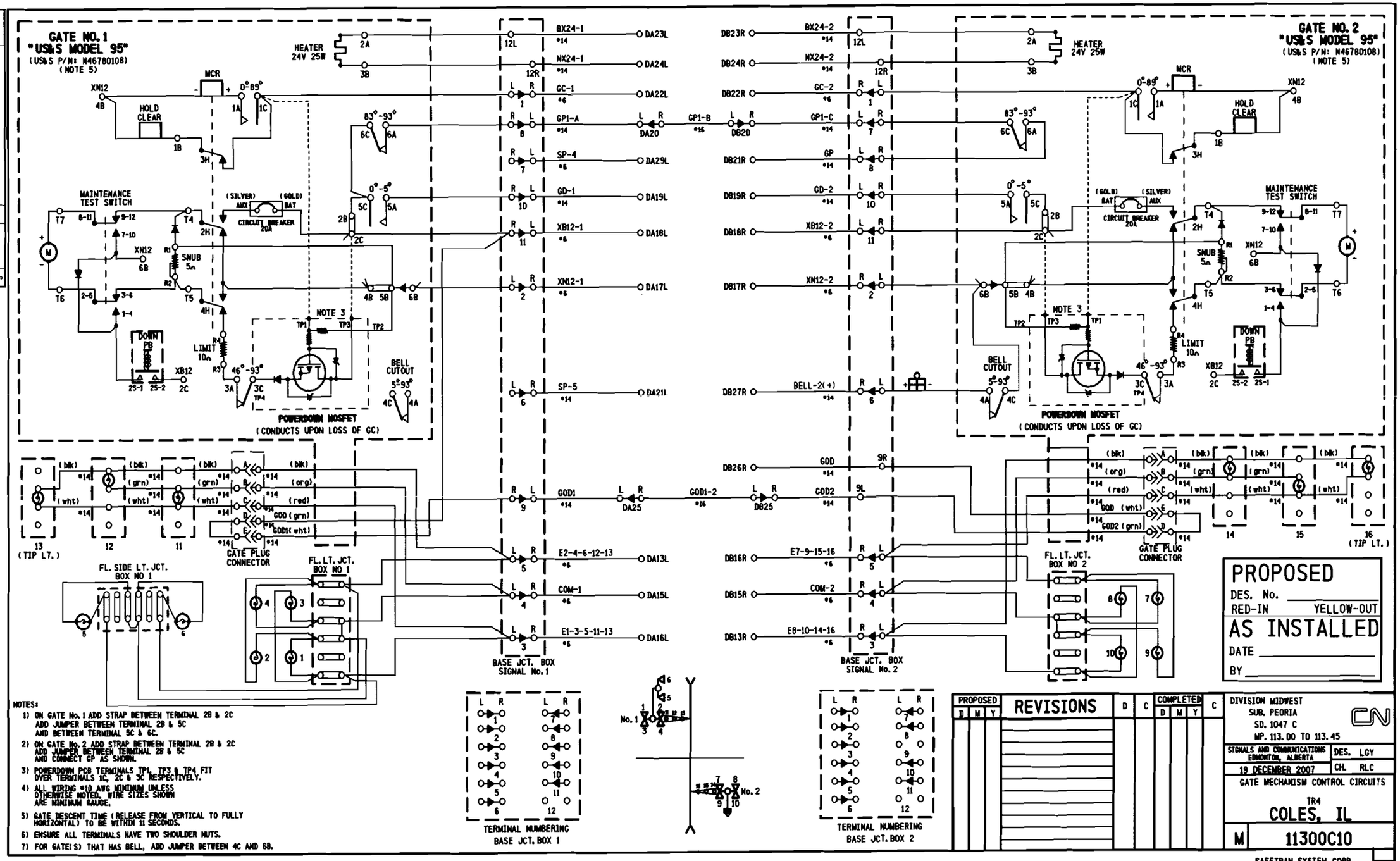

NOTES:

1) ON GATE No. 1 ADD STRAP BETWEEN TERMINAL 2B & 2C ADD JUMPER BETWEEN TERMINAL 2B & 5C AND BETWEEN TERMINAL 5C & 6C.
2) ON GATE No. 2 ADD STRAP BETWEEN TERMINAL 2B & 2C ADD JUMPER BETWEEN TERMINAL 2B & 5C AND CONNECT GP AS SHOWN.
3) POWERDOWN PCB TERMINALS TP1, TP3 & TP4 FIT OVER TERMINALS 1C, 2C & 3C RESPECTIVELY.
4) ALL WIRING #10 AWG MINIMUM UNLESS OTHERWISE NOTED. WIRE SIZES SHOWN ARE MINIMUM GAUGE.
5) GATE DESCENT TIME (RELEASE FROM VERTICAL TO FULLY HORIZONTAL) TO BE WITHIN 11 SECONDS.
6) ENSURE ALL TERMINALS HAVE TWO SHOULDER NUTS.
7) FOR GATE(S) THAT HAS BELL, ADD JUMPER BETWEEN 4C AND 6B.

REVISIONS				
NO.	DATE	BY	DESCRIPTION	APP. BY
1				
2				
3				
4				
5				

SAFETRAN SYSTEMS CORPORATION

DES. : LGY	DATE: 12/19/07	JOB NO. : P1CA10134	
CKD. : RLC	ISSUE DATE: N/A	EST. NO. : N/A	
DRN. : LGY	PLAN NO. : N/A	SHEET N/A OF N/A	
P. TIME: 07:52	P. DATE: 04-MAR-2008	CAD ID. : 11300C10	

PROPOSED
DES. No. _____
RED-IN YELLOW-OUT
AS INSTALLED
DATE _____
BY _____

PROPOSED			REVISIONS	D	C	COMPLETED			C
D	M	Y				D	M	Y	

DIVISION MIDWEST
SUB. PEORIA
SD. 1047 C
MP. 113.00 TO 113.45

CN

SIGNALS AND COMMUNICATIONS EDMONTON, ALBERTA
19 DECEMBER 2007
DES. LGY
CHL RLC

GATE MECHANISM CONTROL CIRCUITS

TR4
COLES, IL

M 11300C10

SAFETRAN SYSTEM CORP.
LOUISVILLE DIVISION, LOUISVILLE, KY

NO.	DATE	BY	DESCRIPTION	APP. BY
1				
2				
3				
4				
5				

REVISIONS

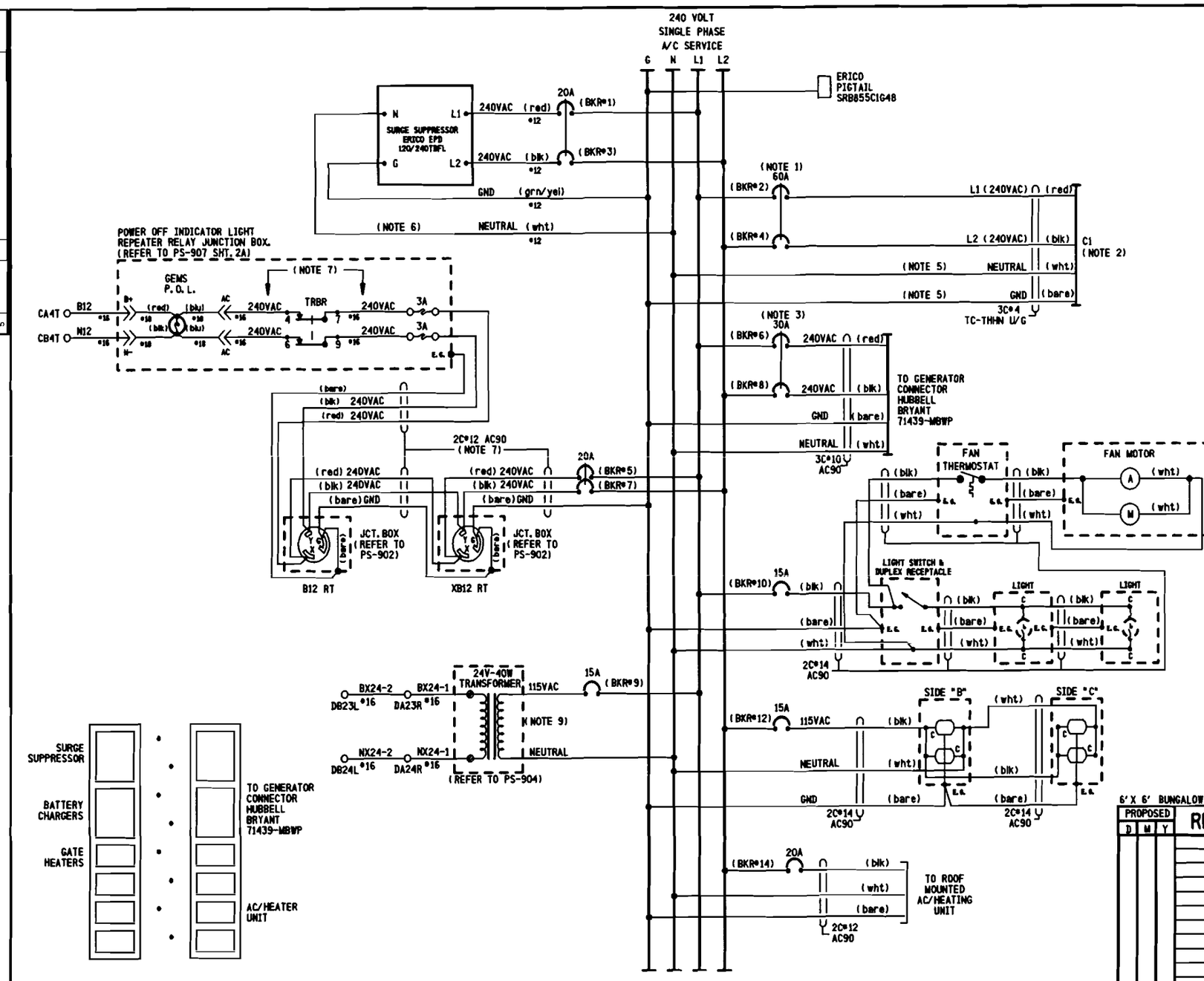

NOTES:

1) CIRCUIT BREAKER NOT TO EXCEED 60 AMPERES. RETAINING KIT PK4MB2LA MUST BE USED WITH 60A BREAKER.
2) FEEDER CIRCUIT BREAKER, AT STUB POLE SERVICE PANEL, NOT TO EXCEED 60 AMPERES.
3) A SWITCH TRANSFER KIT MUST BE INSTALLED BETWEEN THE SERVICE DISCONNECT BREAKER AND THE GENERATOR HOOK UP.
4) WHERE SEPARATE GROUND WIRE EXISTS BETWEEN THE SERVICE AND THE LOAD CENTER, REMOVE THE BRASS COLORED BONDING SCREW. (REFER TO SCHEMATIC ON BOX COVER FOR EXACT LOCATION)
5) S.C.#6 STRANDED, CSA TYPE R90 (X-LINK)
6) KEEP LEADS AS SHORT AS POSSIBLE
7) THE WHITE CONDUCTOR MUST BE MADE PERMANENTLY UNIDENTIFIABLE BY TAPING THIS CONDUCTOR RED. TAPING MUST BE CONTINUOUS WHERE THE SEPARATE CONDUCTORS HAVE BEEN MADE ACCESSIBLE AND VISIBLE.
8) « DENOTES WAGO TERMINAL
9) 24 VOLT - 40 WATT TRANSFORMER (CN STOCK #02-45-367)

PROPOSED
DES. No. _____
RED-IN YELLOW-OUT
AS INSTALLED
DATE _____
BY _____

6' X 6' BUNGALOW

PROPOSED D	M	Y	REVISIONS	D	C	COMPLETED D	M	Y	C

DIVISION MIDWEST
SUB. PEORIA
SD. 1047 C
MP. 113.00 TO 113.45

SIGNALS AND COMMUNICATIONS
EDMONTON, ALBERTA
19 DECEMBER 2007
DES. LGY
CH. RLC

POWER DISTRIBUTION
TR4
COLES, IL

M 11300C11

SAFETRAN SYSTEM CORP.
LOUISVILLE DIVISION, LOUISVILLE, KY

SAFETRAN SYSTEMS CORPORATION

DES.: LGY	DATE: 12/19/07	JOB NO.: PTCA10134	
CKD.: RLC	ISSUE DATE: N/A	EST. NO.: N/A	
DRN.: LGY	PLAN NO.: N/A	SHEET N/A OF N/A	
P TIME: 07:52	P. DATE: 04-MAR-2008	CAD ID.: 11300C11	

REVISIONS				
NO.	DATE	BY	DESCRIPTION	APP. BY
1				
2				
3				
4				
5				

Program Report

Location and SIN

DOT Number: 292941A
Milepost Number: 113.40
Site Name: TR4

SIN: 762010010016

MCF and Template Selection

MCF Name: GCP-T6X-01-2.mcf
MCF Revision: 012
MCFCRC: 0DFE7A0C

Template = 1A:6 Trk BI

Program

BASIC: module configuration
Track 1 Slot = Track
Track 2/RIO 1 Slot = Not Used
Track 3 Slot = Not Used
Track 4 Slot = Not Used
Track 5/RIO 2 Slot = Not Used
Track 6/RIO 3 Slot = Not Used
SSCC-1 Slot = SSCC31
SSCC-2 Slot = SSCC31
SEAR Used = Yes

BASIC: WS/GCP operation
Track 1 : WS/GCP Operation = Yes

BASIC: Island operation
Track 1 : Island Used = Internal

BASIC: preemption
Preempt Logic = No

BASIC: radio Dax links
Radio DAX link A Used = No
Radio DAX link B Used = No

BASIC: Vital Comms links
Vital Comms link 1 Used = No
Vital Comms link 2 Used = No

PREDICTORS: track 1
Track 1 : Prime Used = Yes
Track 1 : Dax A Used = No
Track 1 : Dax B Used = No
Track 1 : Dax C Used = No
Track 1 : Dax D Used = No
Track 1 : Dax E Used = No
Track 1 : Dax F Used = No
Track 1 : Dax G Used = No

GCP: track 1
Track 1 : GCP Freq Category = Standard
Track 1 : GCP Frequency = 211 Hz
Track 1 : Approach Distance = 2107 ft
Track 1 : Uni/Bi/Sim-Bidirni = Bidirni
Track 1 : GCP Transmit Level = High
Track 1 : Island Connection = Isl1
Track 1 : Island Distance = 120 ft
Track 1 : Computed Distance = 9999 ft
Track 1 : Linearization Steps = 100

GCP: track 1 prime
Track 1 : Prime Warning Time = 25 sec
Track 1 : Prime Offset Distance = 0 ft
Track 1 : Switch WS EZ Level = 14
Track 1 : Prime WS/GCP Mode = Pred
Track 1 : Prime Pickup Delay = 30 sec
Track 1 : Prime UAX = Not Used

GCP: track 1 low EZ detect
Track 1 : Low EZ Detection Used = No
Track 1 : Positive Start = Off
Track 1 : Enhanced Detectn Used = Yes
Track 1 : Station Stop Timer = 10 sec
Track 1 : False Activate Level = Normal
Track 1 : Poor Shunting Level = 2

GCP: track 1 WS Control
Track 1 : WS/GCP CtrlIP Used = No
Track 1 : WS Sensitivity Level = 0
Track 1 : Compensation Level = 1300
Track 1 : Low EX Adjustment = 39
Track 1 : Bidirn Dex Passthru = No

ISLAND: track 1
Track 1 : IslFrequency = 8.3 kHz
Track 1 : Pickup Delay (2s +) = 0 sec

AND: track Anding
AND 1 XR Used = Yes
AND 2 Used = No
AND 3 Used = No
AND 4 Used = No
AND 5 Used = No
AND 6 Used = No
AND 7 Used = No
AND 8 Used = No

AND: AND 1 XR
AND 1 XR Track 1 = Prime
AND 1 Enable Used = Yes
And 1 Enable Pickup = 0 sec
AND 1 Enable Drop = 0 sec
AND 1 Wrap Used = No

ADVANCED: WS restart
WS/GCP Restart Used = No

ADVANCED: out of service
OOS Control = OOS IPs

ADVANCED: out of service 2
TI OOS Control = OOS Input 1
TI OOS Controls = GCP and Island

ADVANCED: track wrap circuits
Wrap LOS Timer = 5 sec
Track 1 Wrap Used = No

ADVANCED: trk 1 overrides
Track 1 : AllPredictors Override Used = No

ADVANCED: OR logic
OR 1 Used = No
OR 2 Used = No
OR 3 Used = No
OR 4 Used = No

ADVANCED: internal I/O 1
Pass Thrus = No
Int. 1 Sets = Not Used
Int. 1 Set by = Not Used
Int. 2 Sets = Not Used
Int. 2 Set by = Not Used
Int. 3 Sets = Not Used
Int. 3 Set by = Not Used
Int. 4 Sets = Not Used
Int. 4 Set by = Not Used

ADVANCED: Internal I/O 2
Int. 5 Sets = Not Used
Int. 5 Set by = Not Used
Int. 6 Sets = Not Used
Int. 6 Set by = Not Used
Int. 7 Sets = Not Used
Int. 7 Set by = Not Used
Int. 8 Sets = Not Used
Int. 8 Set by = Not Used

ADVANCED: site options
Daylight Savings = On
Units = Standard
Ext Maint Call Input = No
Emergency Activate IP = No
EZ/EX Logging = Change
EZ/EX Point Change = 3

SSCC
Gates Used = Yes
SSCC1+2 GPs Coupled = Yes
Min Activation = 20 sec
Rmt Activation Cancel = 3 min
Bell On Gate Rising = No
Mute Bell On Gate Down = No
SSCCIV Controller Used = No

SSCC: 1
SSCC-1 Activation = AND 1 XR
SSCC-1 Gate Delay = 3 sec
SSCC-1 Number of GPs = 1
SSCC-1 Number of GDs = 1
SSCC 1 : Flash Rate = 60
SSCC 1 : Low Battery Detection = No
SSCC 1 : Flash Sync = master
SSCC 1 : Invert Gate Output = No
SSCC 1 : Lamp Neutral Test = Off
Aux-1 Xng Ctrl Used = No

SSCC: 2
SSCC-2 Activation = AND 1 XR
SSCC-2 Gate Delay = 3 sec
SSCC-2 Number of GPs = 0
SSCC-2 Number of GDs = 1
SSCC 2 : Flash Rate = 60
SSCC 2 : Low Battery Detection = No
SSCC 2 : Flash Sync = slave
SSCC 2 : Invert Gate Output = No
SSCC 2 : Lamp Neutral Test = Off
Aux-2 Xng Ctrl Used = No

OUTPUT: assignment page 1
OUT 1.1 = Not Used
OUT 1.2 = Not Used

INPUT: assignment page 1
IN 1.1 = AND 1 XR Enable
IN 1.2 = Not Used

IO: assignment SSCC
OUT GC 1 = Gate Output 1
OUT GC 2 = Gate Output 2
IN 7.1 = AND 1 XR Enable
IN 7.2 = Not Used
IN 7.3 = Not Used
IN 7.4 = GD 1.1
IN 7.5 = GP 1.1
IN 8.1 = Out Of Service IP 1
IN 8.2 = Not Used
IN 8.3 = Not Used
IN 8.4 = GD 2.1
IN 8.5 = Not Used

SEAR
SEAR Subnode = 99
DI 1 = General1
DI 2 = Gnd Flt Tester 1
Rly 1 = Ground Fault Test
Rly 2 = Not Used

SEAR: Inputs
SP 2.1 = Not Used
SP 3.1 = Not Used
SP 4.1 = Not Used
SP 5.1 = Not Used
SP 6.1 = Not Used

SEAR: slot 1-4 inputs
IN 1.2 = Not Used
IN 2.1 = Not Used
IN 2.2 = Not Used
IN 3.1 = Not Used
IN 3.2 = Not Used
IN 4.1 = Not Used
IN 4.2 = Not Used

SEAR: Inputs slot 5
IN 5.1 = Not Used
IN 5.2 = Not Used

SEAR: Inputs slot 6
IN 6.1 = Not Used
IN 6.2 = Not Used

SEAR: slot 7-8 inputs
IN 7.2 = Not Used
IN 7.3 = Not Used
IN 8.2 = Not Used
IN 8.3 = Not Used
IN 8.5 = General2

SITE: programming
Radio Subnode = 1
Password Access = Off
Low Battery Enabled = Off

Configuration Package File

Filename: 292941A.pac

TEMPLATE MTF-1A

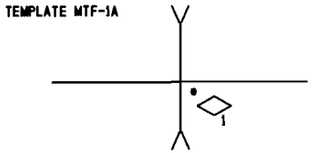

* INDICATES TRACK WITH ISLAND

NOTES:

1) DISTANCE(S) TO BE VERIFIED AT INSTALLATION.
INDICATE SELECTED PROGRAMMED VALUE IF DIFFERENT THAN SHOWN.
REFER TO 4000 GCP INSTRUCTION/INSTALLATION MANUAL
FOR PROGRAMMING PARAMETERS.

2) PROGRAM TEXT HIGHLITED IN RED INDICATES 4000 PROGRAM
MODIFICATIONS TO DEFAULT PROGRAM VALUES.

3) EACH CONSTANT WARNING DEVICE SYSTEM TO BE PROGRAMMED TO
CONVERT TO A MOTION SENSOR 300 FEET FROM EDGE OF ROAD
TRAVELLED WAY.
SHUNT TRACK 300 FEET FROM EDGE OF ROAD TRAVELLED WAY
AND NOTE "EZ" VALUE.
PROGRAM EACH SYSTEM WITH THE INDICATED "EZ" VALUE +2.

4) VERIFY SET TIMER VALUE TO MATCH ACTUAL TRAIN MOVEMENT
WITHIN THE CROSSING APPROACH CIRCUITS.

PROPOSED
DES. No. _____
RED-IN YELLOW-OUT
AS INSTALLED
DATE _____
BY _____

PROPOSED			REVISIONS	D	C	COMPLETED			C
D	M	Y				D	M	Y	

DIVISION MIDWEST
SUB. PEORIA
SD. 1047 C
MP. 113.00 TO 113.45

SIGNALS AND COMMUNICATIONS EDMONTON, ALBERTA
DES. LGY
19 DECEMBER 2007
CH. RLC

GCP 4000 NON REDUNDANT
PROGRAM INFORMATION
TR4
COLES, IL

M 11300C12

SAFETRAN SYSTEM CORP.
LOUISVILLE DIVISION, LOUISVILLE, KY

SAFETRAN SYSTEMS CORPORATION		
DES. : LGY	DATE: 12/19/07	JOB NO. : PICA10134
CKD. : RLC	ISSUE DATE: N/A	EST. NO. : N/A
DRN. : LGY	PLAN NO. : N/A	SHEET N/A OF N/A
P. TIME: 07:52	P. DATE: 04-MAR-2008	CAD ID. : 11300C12

REVISIONS				
NO.	DATE	BY	DESCRIPTION	APP. BY
1				
2				
3				
4				
5				

TO CONFIGURE SEARII & SEARIII PRESS SITE SETUP KEY. USE ARROW KEYS TO MAKE SELECTION, PRESS ENTER AFTER SELECTION HAS BEEN MADE.

STAGE 1

PROGRAM MENU QUESTIONS	PROGRAM	OPTIONS/RANGE
DATE/TIME?	CURRENT DATE/TIME	CURRENT DATE/TIME
AUTOMATIC DST ADJUSTMENT?	YES	YES, NO
TIME ZONE?	CENTRAL	EASTERN, CENTRAL, MOUNTAIN, PACIFIC, ALASKA, HAWAII, ATLANTIC, SASKATCHEWAN, NEW FOUNLAND
SITE NAME?	TR4	STREET NAME
MILE POST?	113.40	MILEAGE
DOT/CROSSING IS #?	(NOTE 1)	292941A
TESTER TYPE?	CROSSING	CROSSING, WAYSIDE
DATE FORMAT?	dd-mm-yyyy	mm-dd-yyyy, dd-mm-yyyy
TEMPERATURE FORMAT?	FAHRENHEIT	FAHRENHEIT, CELSIUS
SITE TYPE?	NO COM	NO COM, BULLHORN, DIALUP, NODE, COLLECTOR
SITE ATCS ADDRESS?	7.620.100.100.99.01	7.RRR.LLL.GGG.99.01
OFFICE ATCS ADDRESS?		2.RRR.NN.DDDD
(FOR NODE USE) PRIMARY HOP ADDR?		7.RRR.LLL.GGG.00.01
(FOR NODE USE) BACKUP HOP ADDR1?		7.RRR.LLL.GGG.00.01
(FOR NODE USE) BACKUP HOP ADDR2?		7.RRR.LLL.GGG.00.01
(FOR COLLECTOR USE) POLL ID?		1-99
(FOR COLLECTOR USE) MODE?		GEN/ATCS, GENISYS
(FOR COLLECTOR USE) WAMS/XID?		ENABLED, DISABLE
(FOR COLLECTOR USE) OFFICE COMM. DEVICE?		DIRECT (RS232) MCM (RS232) MCM (ECHELON) SREAD SPEC (ECHELON) DIAL MODEM (RS232) S200 RADIO (RS422)
(FOR COLLECTOR USE) OFFICE PHONE NUMBER?		PHONE NUMBER OF WAMS
(FOR COLLECTOR USE) INIT STRING?		OPTIONAL HAYES MODEM INITIALIZATION STRING
FIELD COMM. DEVICE?		VHF COMM. (ECHELON) VHF COMM. (RS232) SPREAD SPEC (ECHELON) SPREAD SPEC (RS232)
USER PORT?	57600, 8, N, 1, N	BAUD, DATA BITS, PARITY, STOP BITS, FLOW CONTROL
AUX PORT?	9600, 8, N, 1, N	BAUD, DATA BITS, PARITY, STOP BITS, FLOW CONTROL

YOU WILL NOW SEE A MESSAGE "PLEASE WAIT COMPILING STAGE 1"
CONTINUE TO NEXT PROGRAM MENU QUESTIONS.

STAGE 2

QUESTION	PROGRAM	SELECTION 1 (MINIMUM)	SELECTION 2 (MAXIMUM)	CONDITION FOR MENU DISPLAY
RESET NAMES / MODULES ?	NO	YES	NO	ALWAYS
RAILROAD NUMBER ?	360 (IC)	1	999	ALWAYS
CROSSING CONFIGURATION	NORMAL	NORMAL	SPLIT GATE (NOTE 2)	ALWAYS
ENTRANCE GATES ?	0 (NOTE 3)	0	8	ALWAYS
GATE POSTION FAIL TIME (SECONDS) ?	N/A	10	60	GATES > 0
BATTERY BANKS ?	2	1	3	ALWAYS
BATT MON USED ?	NO	NO	YES	ALWAYS
INTERNAL CROSSING CONTROLLERS ?	2	0	2	ALWAYS
EXTERNAL CROSSING CONTROLLERS ?	0	0	2	CROSSING CONTROLLER = YES
VHF COMMUNICATOR ?	YES	YES	NO	ALWAYS
DTMF ACTIVATION?	NO	NO	YES	RAILROAD = 360 (IC)
ACTIVATION CODE ?	N/A	1	999	VHF COMMUNICATOR = YES
ACTIVATION TIMEOUT ?	N/A	1	600	VHF COMMUNICATOR = YES
ILOD MODULES ?	2	0	4	ALWAYS
ANY LED BULBS USED ?	YES	NO	YES	ILOD MODULES > 0
AUTO INSPECTION ?	NO	YES	NO	ALWAYS
BELL SENSORS ?	0	0	8	ALWAYS
BELL SENSORS TSS1 ?	N/A	NO	YES	BELL SENSORS > 0
BELL SENSORS TSS2 ?	N/A	NO	YES	BELL SENSORS > 0
BELL SENSORS TSS3 ?	N/A	NO	YES	BELL SENSORS > 0
BELL SENSORS TSS4 ?	N/A	NO	YES	BELL SENSORS > 0
BELL SENSORS TSS5 ?	N/A	NO	YES	BELL SENSORS > 0
BELL SENSORS TSS6 ?	N/A	NO	YES	BELL SENSORS > 0
BELL SENSORS TSS7 ?	N/A	NO	YES	BELL SENSORS > 0
BELL SENSORS TSS8 ?	N/A	NO	YES	BELL SENSORS > 0
BELL ON ?	N/A	GATES LOWERING	GATES MOVING	BELL SENSORS > 0
GFT'S ?	YES	YES	NO	ALWAYS
BATTERIES ON GFT1 ?	2	1	2	GFT'S = YES
GATE TIP SENSORS ?	N/A	YES	NO	GATES > 0
RTU ?	NO	NO	YES	ALWAYS
VHF VOICE CHANNEL ?	1 (NOTE 1)	1	8	VHF COMMUNICATOR = YES
VHF DATA CHANNEL ?	1 (NOTE 1)	1	8	VHF COMMUNICATOR = YES
USE CELL MODEM NON-CRITICAL FEATURE ?	NO	NO	YES	ALWAYS
FULL APPROACH MOVE ALARMS ?	ACTIVATE	ACTIVATE	DO NOT ACTIVATE	ALWAYS

YOU WILL NOW SEE A MESSAGE "PLEASE WAIT COMPILING STAGE 2"
CONTINUE TO NEXT PROGRAM MENU QUESTIONS.

STAGE 3

PROGRAM MENU QUESTIONS	PROGRAM
EDIT DIGITAL INPUTS	NO
EDIT BATTERIES	NO
EDIT RELAYS	NO
EDIT TEST LEDS	NO
EDIT ILOD SENSORS	NO
EDIT VHF SETTINGS	NO
GCP4K ATCS SUBNODE?	16

SAVE CONFIGURATION

NOTES:

1) INDICATE SELECTION IN SPACE PROVIDED.
2) ADDITIONAL OPTIONS: DUAL CROSSING, EXTERNAL ENTRANCE GATE CONTROLLERS.
3) SELECT "0" IF NO GATE TIP AND BELL SENSORS ARE USED. THUS GATE AND BELL SENSOR RELATED STEPS WILL NOT BE AVAILABLE, OVERWISE ERRORS IN SEARS RECORDING WILL OCCUR.

PROPOSED
DES. No. _____
RED-IN YELLOW-OUT
AS INSTALLED
DATE _____
BY _____

SEARII EXECUTIVE SOFTWARE: 9V725-A01T SEARII APPLICATION SOFTWARE: 9V864-A01H

PROPOSED D	M	Y	REVISIONS	D	C	COMPLETED D	M	Y	C

DIVISION MIDWEST
SUB. PEORIA
SD. 1047 C
MP. 113.00 TO 113.45

SIGNALS AND COMMUNICATIONS EDMONTON, ALBERTA
19 DECEMBER 2007
DES. LGY
CH. RLC

SEARIII
SETUP AND PROGRAM
TR4
COLES, IL

M 11300C13

SAFETRAN SYSTEMS CORPORATION
SAFETRAN SYSTEM CORP.
LOUISVILLE DIVISION, LOUISVILLE, KY

DES. : LGY	DATE: 12/19/07	JOB NO. : PIC410134	
CKD. : RLC	ISSUE DATE: N/A	EST. NO. : N/A	
DRN. : LGY	PLAN NO. : N/A	SHEET N/A OF N/A	
P. TIME: 07:52	P. DATE: 04-MAR-2008	CAD ID. : 11300C13	

REVISIONS				
NO.	DATE	BY	DESCRIPTION	APP. BY
1				
2				
3				
4				
5				

CALIBRATION HISTORY

INITIAL SET UP BY: _____ DATE: _____

DC VOLTAGE READINGS AFTER CALIBRATION				CALIBRATION HISTORY										LINEARIZATION HISTORY (NOTE 1)							
				EZ/EX VALUES (TRACK UNOCCUPIED)				HARD WIRE SHUNT AT TERMINATION SHUNT						HARD WIRE SHUNT AT 50 PERCENT POINT OF SHUNT							
				EZ		EX		EZ		EX		50 PERCENT OF EZ VALUE		NO LINEARIZATION				LINEARIZATION COMPLETE			
														EZ		EX		STEP±		EZ	
				NRML	STBY	NRML	STBY	NRML	STBY	NRML	STBY	NRML	STBY	NRML	STBY	NRML	STBY	NRML	STBY	NRML	STBY
T1	Z1=	NORTH	TRACK 1																		
T1	Z2=	SOUTH	TRACK 1																		

CALIBRATION HISTORY

INITIAL SET UP BY: _____ DATE: _____

DC VOLTAGE READINGS AFTER CALIBRATION				CALIBRATION HISTORY										LINEARIZATION HISTORY (NOTE 1)							
				EZ/EX VALUES (TRACK UNOCCUPIED)				HARD WIRE SHUNT AT TERMINATION SHUNT						HARD WIRE SHUNT AT 50 PERCENT POINT OF SHUNT							
				EZ		EX		EZ		EX		50 PERCENT OF EZ VALUE		NO LINEARIZATION				LINEARIZATION COMPLETE			
														EZ		EX		STEP±		EZ	
				NRML	STBY	NRML	STBY	NRML	STBY	NRML	STBY	NRML	STBY	NRML	STBY	NRML	STBY	NRML	STBY	NRML	STBY
T1	Z1=	NORTH	TRACK 1																		
T1	Z2=	SOUTH	TRACK 1																		

CALIBRATION HISTORY

INITIAL SET UP BY: _____ DATE: _____

DC VOLTAGE READINGS AFTER CALIBRATION				CALIBRATION HISTORY										LINEARIZATION HISTORY (NOTE 1)							
				EZ/EX VALUES (TRACK UNOCCUPIED)				HARD WIRE SHUNT AT TERMINATION SHUNT						HARD WIRE SHUNT AT 50 PERCENT POINT OF SHUNT							
				EZ		EX		EZ		EX		50 PERCENT OF EZ VALUE		NO LINEARIZATION				LINEARIZATION COMPLETE			
														EZ		EX		STEP±		EZ	
				NRML	STBY	NRML	STBY	NRML	STBY	NRML	STBY	NRML	STBY	NRML	STBY	NRML	STBY	NRML	STBY	NRML	STBY
T1	Z1=	NORTH	TRACK 1																		
T1	Z2=	SOUTH	TRACK 1																		

NOTE:

1) **SET UP APPROACH LENGTH AND LINEARIZATION CALIBRATION**
VERIFY THAT "ENHANCED DETECTION" MODE IS PROGRAMMED "OFF" BEFORE ATTEMPTING LINEARIZATION PROCEDURES.

PROPOSED
DES. No. _____
RED-IN YELLOW-OUT
AS INSTALLED
DATE _____
BY _____

6' X 6' BUNGALOW

PROPOSED			REVISIONS	D	C	COMPLETED			C
D	M	Y				D	M	Y	

DIVISION MIDWEST
SUB. PEORIA
SD. 1047 C
MP. 113.00 TO 113.45

CN

SIGNALS AND COMMUNICATIONS EDMONTON, ALBERTA
DES. LGY
19 DECEMBER 2007
CH. RLC

GCP 4000
CALIBRATION HISTORY
TR4
COLES, IL

M 11300C14

SAFETRAN SYSTEM CORP.
LOUISVILLE DIVISION, LOUISVILLE, KY

SAFETRAN SYSTEMS CORPORATION

DES.: LGY	DATE: 12/19/07	JOB NO.: PICA10134	
CKD.: RLC	ISSUE DATE: N/A	EST. NO.: N/A	
DRN.: LGY	PLAN NO.: N/A	SHEET N/A OF N/A	
P TIME: 07:52	P DATE: 04-MAR-2008	CAD ID.: 11300C14	

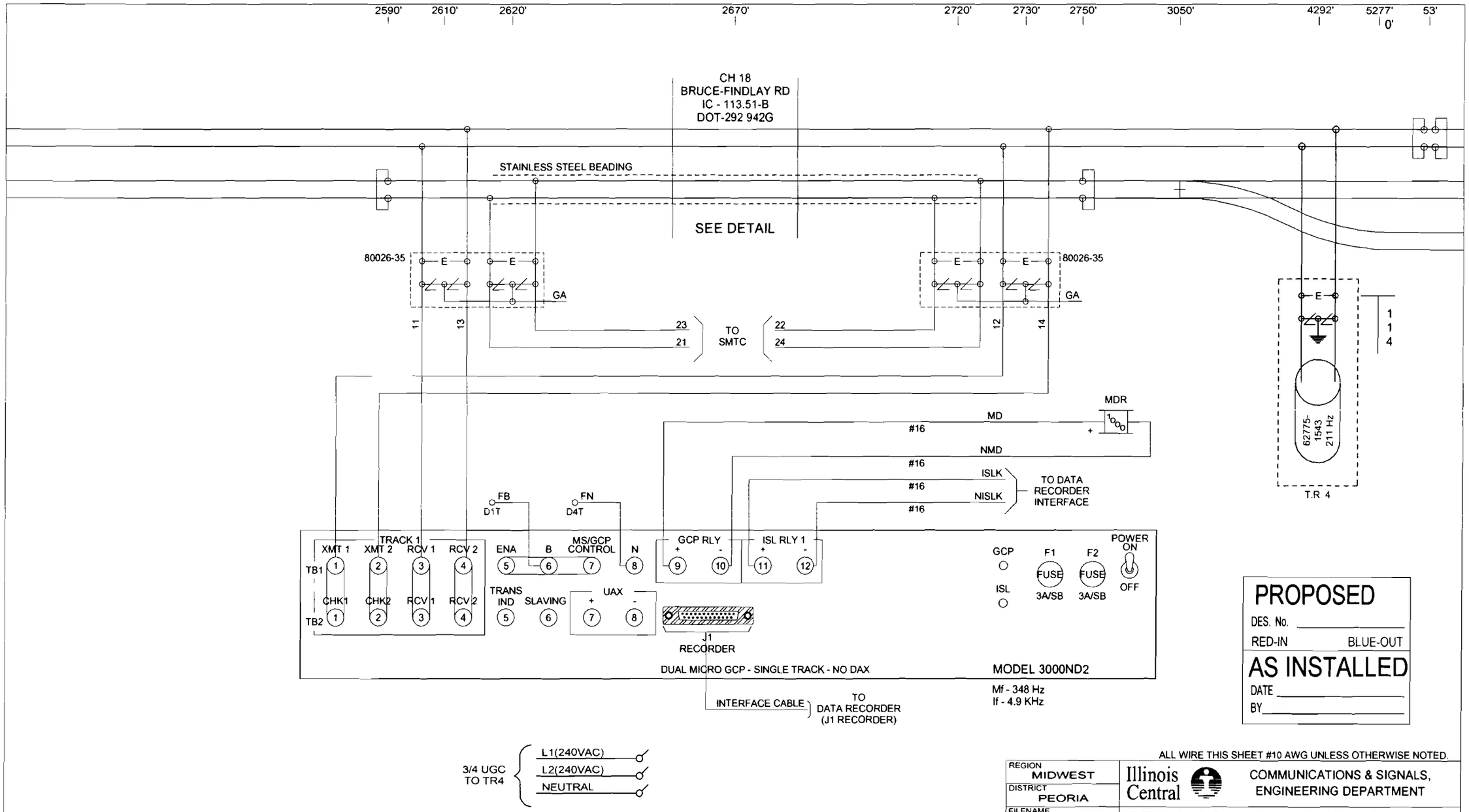
2590'
2610'
2620'
2670'
2720'
2730'
2750'
3050'
4292'
5277'
0'
53'
CH 18
BRUCE-FINDLAY RD
IC - 113.51-B
DOT-292 942G
STAINLESS STEEL BEADING
SEE DETAIL
80026-35
E
GA
11
13
12
14
23
21
22
24
TO
SMTC
1
1
4
62775-
1543
211 Hz
T.R 4
MDR
MD
#16
NMD
ISLK
NISLK
TO DATA
RECORDER
INTERFACE
FB
D1T
FN
D4T
TRACK 1
XMT 1
XMT 2
RCV 1
RCV 2
TB1
CHK1
CHK2
TB2
ENA
B
MS/GCP
CONTROL
N
TRANS
IND
SLAVING
UAX
GCP RLY
ISL RLY 1
J1
RECORDER
GCP
ISL
F1
F2
FUSE
3A/SB
POWER
ON
OFF
DUAL MICRO GCP - SINGLE TRACK - NO DAX
MODEL 3000ND2
Mf - 348 Hz
If - 4.9 KHz
INTERFACE CABLE
TO
DATA RECORDER
(J1 RECORDER)
3/4 UGC
TO TR4
L1(240VAC)
L2(240VAC)
NEUTRAL
PROPOSED
DES. No.
RED-IN
BLUE-OUT
AS INSTALLED
DATE
BY
ALL WIRE THIS SHEET #10 AWG UNLESS OTHERWISE NOTED.
REGION
MIDWEST
DISTRICT
PEORIA
FILENAME
11345C01.CAD
DESIGNER
MKN
DATE
12/8/97
SHEET NO.
1 OF 11
Illinois
Central
COMMUNICATIONS & SIGNALS,
ENGINEERING DEPARTMENT
SD 1047 C
MP 113.45 TO 114.00
Coles, IL
CH 18
Track & Cable/GCP 3000ND2
5
4
3
3-1-06
2
6-18-98
1
REVISIONS

3000 GCP APPLICATION HISTORY CARD

Equipment: 3000 ☐ 3000D2 ☐ 3000D2L ☐ 3000ND ☐ 3000ND2 ■ Unit/Serial No: _____ Crossing No: IC-113.51-B

Crossing Name: CH 18 City: COLES State: IL

Date Installed: 6-18-98 Weather: _____

Island Frequency: T1: 4.9 kHz T2: _____ kHz

PROGRAMMING HISTORY

	Initial Programmed Value Date: _____	Program Change Date: _____	Program Change Date: _____
■ press PROGRAM key			
NUMBER OF TRACKS (Number of transceiver modules, 1 or 2)	1 ■ 2 ☐	1 ☐ 2 ☐	1 ☐ 2 ☐
FREQUENCY (MS/GCP)	348 Hz	_____ Hz	_____ Hz
UNIDIRECTIONAL/BIDIRECTIONAL	T1: UNI ☐ BI ■	UNI ☐ BI ☐	UNI ☐ BI ☐
	T2: UNI ☐ BI ☐	UNI ☐ BI ☐	UNI ☐ BI ☐
XMIT LEVEL	T1: MAX ☐ MED ■	MAX ☐ MED ☐	MAX ☐ MED ☐
	T2: MAX ☐ MED ☐	MAX ☐ MED ☐	MAX ☐ MED ☐
PREDICTOR/MOTION SENSOR	T1: PRED ■ MS ☐	PRED ☐ MS ☐	PRED ☐ MS ☐
	T2: PRED ☐ MS ☐	PRED ☐ MS ☐	PRED ☐ MS ☐
WARNING TIME SELECTED	T1: 26 sec.	_____ sec.	_____ sec.
	T2: _____ sec.	_____ sec.	sec.
APPROACH DISTANCE SELECTED	T1: 2600 ft.	_____ ft.	_____ ft.
	T2: _____ ft.	_____ ft.	_____ ft.
APPROACH DISTANCE COMPUTED	T1: _____ ft.	_____ ft.	_____ ft.
	T2: _____ ft.	_____ ft.	_____ ft.
UAX PICKUP DELAY (UAX1) (0 = OFF)	0 sec.	_____ sec.	_____ sec.
ENA/UAX2 DELAY (0 = ENA)	0 sec.	_____ sec.	_____ sec.
ISLAND DISTANCE (between island track wire connections)	T1: 120 ft.	_____ ft.	_____ ft.
	T2: _____ ft.	_____ ft.	_____ ft.
NUMBER OF DAX'S	0 ■ 1 ☐ 2 ☐ 3 ☐ 4 ☐	0 ☐ 1 ☐ 2 ☐ 3 ☐ 4 ☐	0 ☐ 1 ☐ 2 ☐ 3 ☐ 4 ☐
DAX A TRACK ASSIGNMENT	T1 ☐ T2 ☐	T1 ☐ T2 ☐	T1 ☐ T2 ☐
DAX A DISTANCE (0=PREEMPT)	_____ ft.	_____ ft.	_____ ft.
DAX A WARNING TIME	_____ sec.	_____ sec.	_____ sec.
DAX B TRACK ASSIGNMENT	T1 ☐ T2 ☐	T1 ☐ T2 ☐	T1 ☐ T2 ☐
DAX B DISTANCE (0=PREEMPT)	_____ ft.	_____ ft.	_____ ft.
DAX B WARNING TIME	_____ sec.	_____ sec.	_____ sec.
DAX C TRACK ASSIGNMENT	T1 ☐ T2 ☐	T1 ☐ T2 ☐	T1 ☐ T2 ☐
DAX C DISTANCE (0=PREEMPT)	_____ ft.	_____ ft.	_____ ft.
DAX C WARNING TIME	_____ sec.	_____ sec.	_____ sec.
DAX D TRACK ASSIGNMENT	T1 ☐ T2 ☐	T1 ☐ T2 ☐	T1 ☐ T2 ☐
DAX D DISTANCE (0=PREEMPT)	_____ ft.	_____ ft.	_____ ft.
DAX D WARNING TIME	_____ sec.	_____ sec.	_____ sec.

PROGRAMMING HISTORY (continued)

	Initial Programmed Value Date: _____	Program Change Date: _____	Program Change Date: _____
SLAVING MASTER/SLAVE	MASTER ■ SLAVE ☐	MASTER ☐ SLAVE ☐	MASTER ☐ SLAVE ☐
PASSWORD ENABLED	DISABLED ☐ ENABLED ■	DISABLED ☐ ENABLED ☐	DISABLED ☐ ENABLED ☐
RECORDER INSTALLED	NOT INSTALLED ☐ INSTALLED ■	NOT INSTALLED ☐ INSTALLED ☐	NOT INSTALLED ☐ INSTALLED ☐
RS-232-C BAUD RATE	9600 bps	_____ bps	_____ bps
RS-232-C DATA BITS	7 ☐ 8 ■	7 ☐ 8 ☐	7 ☐ 8 ☐
RS-232-C STOP BITS	1 ■ 2 ☐	1 ☐ 2 ☐	1 ☐ 2 ☐
RS-232-C PARITY	NONE ■ MARK ☐ ODD ☐ SPACE ☐ EVEN ☐	NONE ☐ MARK ☐ ODD ☐ SPACE ☐ EVEN ☐	NONE ☐ MARK ☐ ODD ☐ SPACE ☐ EVEN ☐
(NOTE: SET DATE & TIME AS REQUIRED)			
DATE (e.g., MON 27 FEB 1995)	_____	_____	_____
TIME (e.g., 11:25:43 AM)	_____	_____	_____
DAYLIGHT SAVINGS	ON ■ OFF ☐		

EXPANDED PROGRAMMING HISTORY (Function Mode, Optional)

	Initial Programmed Value Date: _____	Program Change Date: _____	Program Change Date: _____
■ press FUNCTION key			
SWITCH TO MS (enter EZ value)	T1: 10 EZ	_____ EZ	_____ EZ
	T2: 0 EZ	_____ EZ	_____ EZ
TRANSFER DELAY MS TO GCP (O=OFF)	T1: 0 sec.	_____ sec.	_____ sec.
	T2: 0 sec.	_____ sec.	_____ sec.
PRIME PREDICTION OFFSET (O=OFF)	T1: 0 ft.	_____ ft.	_____ ft.
	T2: 0 ft.	_____ ft.	_____ ft.
PICKUP DELAY PRIME	30 sec.	_____ sec.	_____ sec.
PICKUP DELAY DAX A	N/A sec.	_____ sec.	_____ sec.
PICKUP DELAY DAX B	N/A sec.	_____ sec.	_____ sec.
PICKUP DELAY DAX C	N/A sec.	_____ sec.	_____ sec.
PICKUP DELAY DAX D	N/A sec.	_____ sec.	_____ sec.
COMPENSATION VALUE	T1: _____	_____	_____
	T2: _____	_____	_____
NUMBER OF TRACK WIRES	T1: 4 ■ 6 ☐	4 ☐ 6 ☐	4 ☐ 6 ☐
	T2: 4 ☐ 6 ☐	4 ☐ 6 ☐	4 ☐ 6 ☐

CALIBRATION HISTORY

		CALIBRATION HISTORY		LINEARIZATION HISTORY				
		EZ/EX VALUES (TRACK UNOCCUPIED)		HARDWIRE SHUNT AT TERMINATION SHUNT		HARDWIRE SHUNT AT 50 PERCENT POINT OF TRACK		
						NO LINEARIZATION	LINEARIZATION COMPLETE	
		EZ	EX	EZ VALUE	EZ/2 VALUE	EZ VALUE	STEP ‡	EZ
NORTH	TRACK 1							
SOUTH	TRACK 1							
NORTH	TRACK 2							
SOUTH	TRACK 2							

REGION	MIDWEST
DISTRICT	PEORIA
FILENAME	11345C02.CAD
DESIGNER	MKN
DATE	12/8/97
SHEET NO.	2 OF 11

Illinois Central

COMMUNICATIONS & SIGNALS, ENGINEERING DEPARTMENT

SD 1047 C MP 113.45 TO 114.00

Coles, IL

CH 18

GCP Application Info.

5		4		3	3-1-06	2	6-18-98	1	REVISIONS

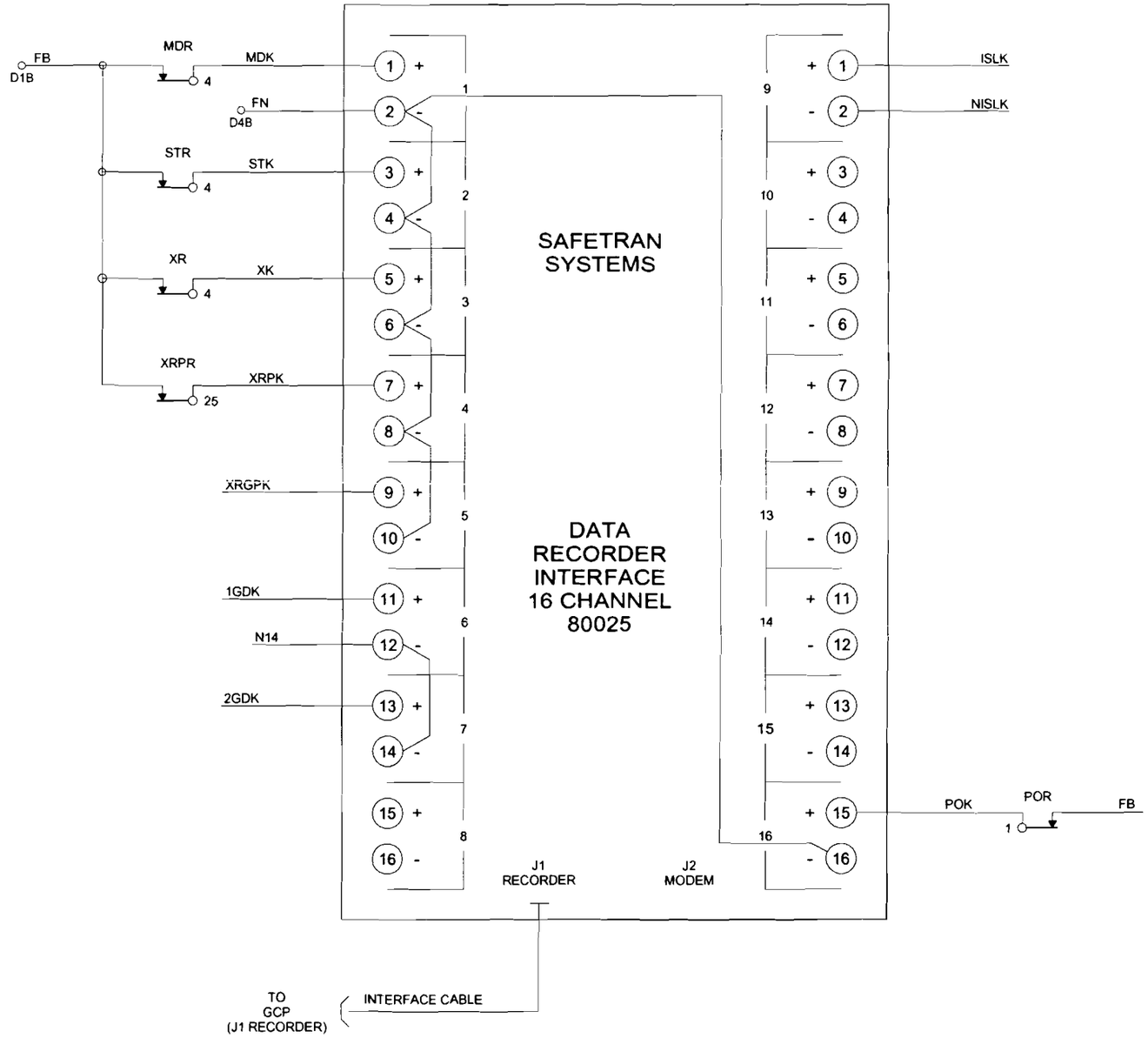

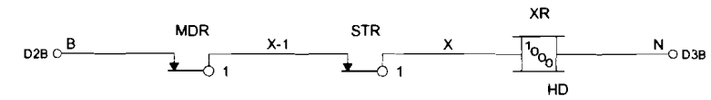

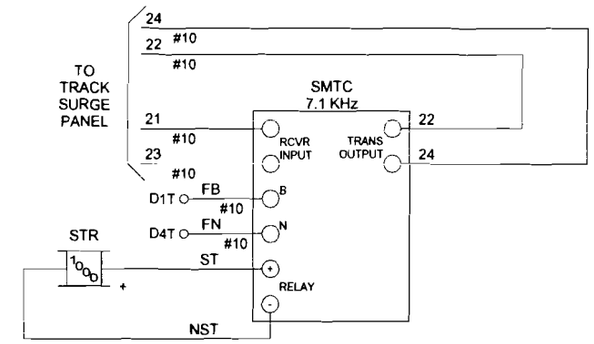

ALL WIRE THIS SHEET #16 AWG UNLESS OTHERWISE NOTED.

REGION MIDWEST	Illinois Central — COMMUNICATIONS & SIGNALS, ENGINEERING DEPARTMENT
DISTRICT PEORIA	
FILENAME 11345C03.CAD	SD 1047 C MP 113.45 TO 114.00
DESIGNER MKN / DATE 12/8/97	Coles, IL
SHEET NO. 3 OF 11	CH 18 Data Recorder

REVISIONS					
5	4	3	3-1-06	2	6-18-98

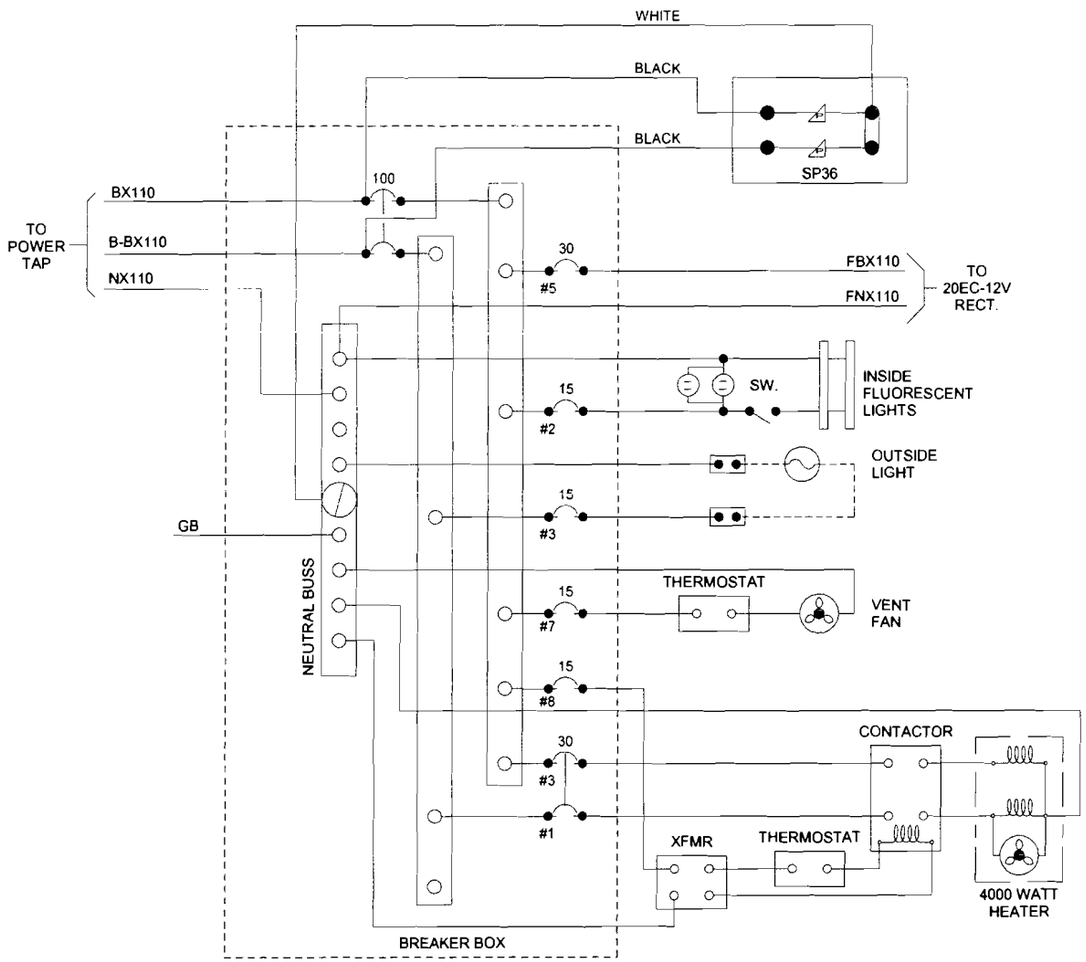

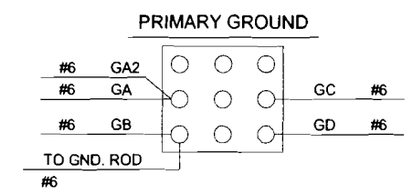

ALL WIRE THIS SHEET #10 AWG UNLESS OTHERWISE NOTED.

REGION	MIDWEST
DISTRICT	PEORIA
FILENAME	11345C04.CAD
DESIGNER	MKN
DATE	12/8/97
SHEET NO.	4 OF 11

Illinois Central

COMMUNICATIONS & SIGNALS, ENGINEERING DEPARTMENT

SD 1047 C MP 113.45 TO 114.00

Coles, IL

CH 18
AC POWER

5	4	3	3-1-06	2	6-18-98	1	REVISIONS

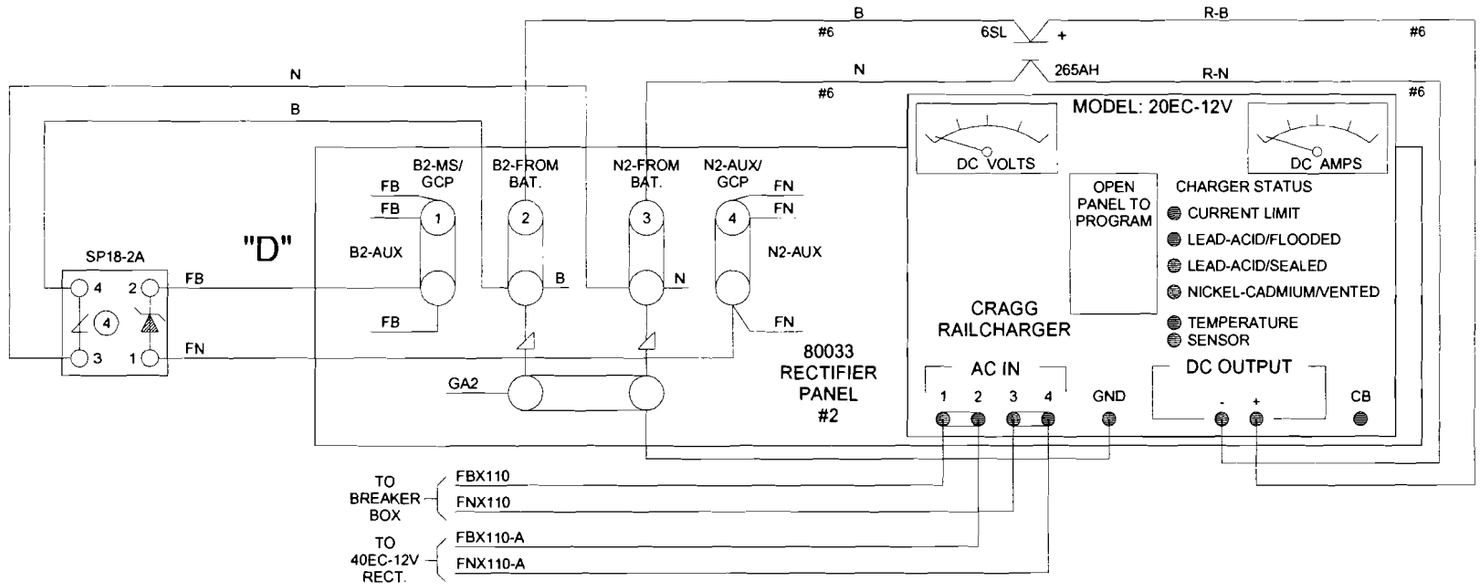

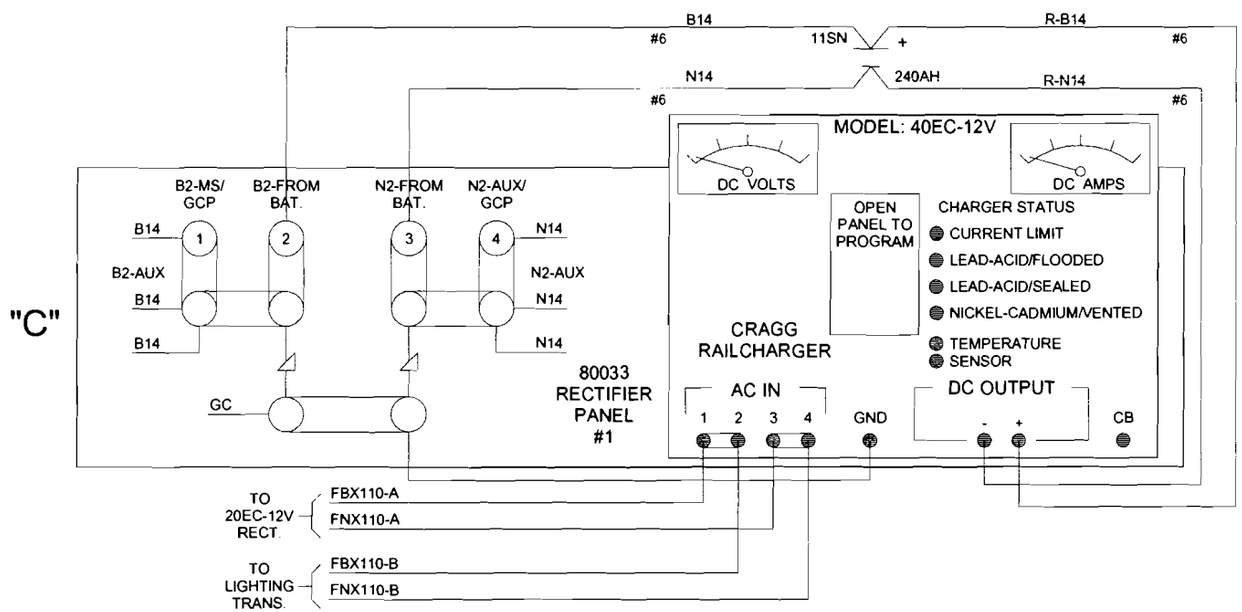

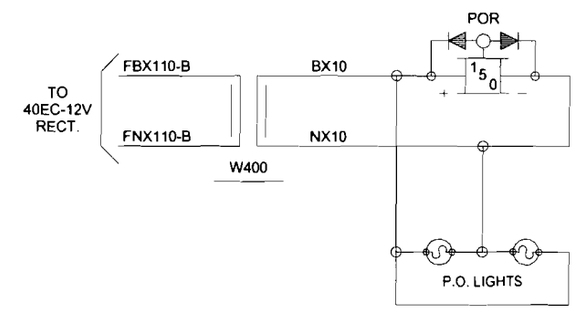

REGION MIDWEST	Illinois Central	COMMUNICATIONS & SIGNALS, ENGINEERING DEPARTMENT
DISTRICT PEORIA		
FILENAME 11345C05.CAD	SD 1047 C	MP 113.45 TO 114.00
DESIGNER MKN / DATE 12/8/97		Coles, IL
SHEET NO. 5 OF 11		CH 18 DC POWER

5	4	3	3-1-06	2	6-18-98	1	REVISIONS

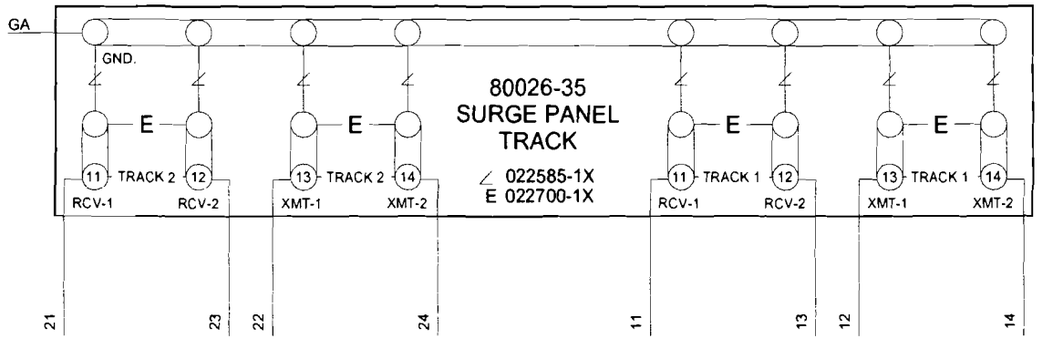

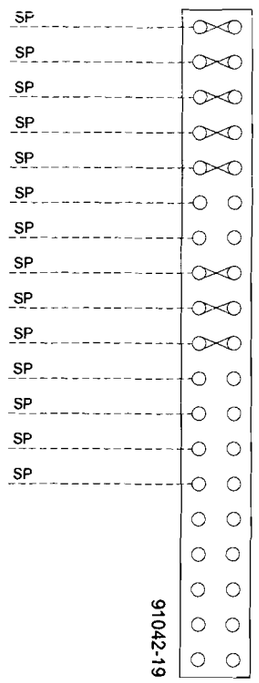

ALL WIRE THIS SHEET #10 AWG UNLESS OTHERWISE NOTED.

REGION	MIDWEST
DISTRICT	PEORIA
FILENAME	11345C06.CAD
DESIGNER	MKN
DATE	12/8/97
SHEET NO.	6 OF 11

Illinois Central

COMMUNICATIONS & SIGNALS, ENGINEERING DEPARTMENT

SD 1047 C MP 113.45 TO 114.00

Coles, IL

CH 18

Trk. Surge Panel

5	4	3	3-1-06	2	6-18-98	1	REVISIONS

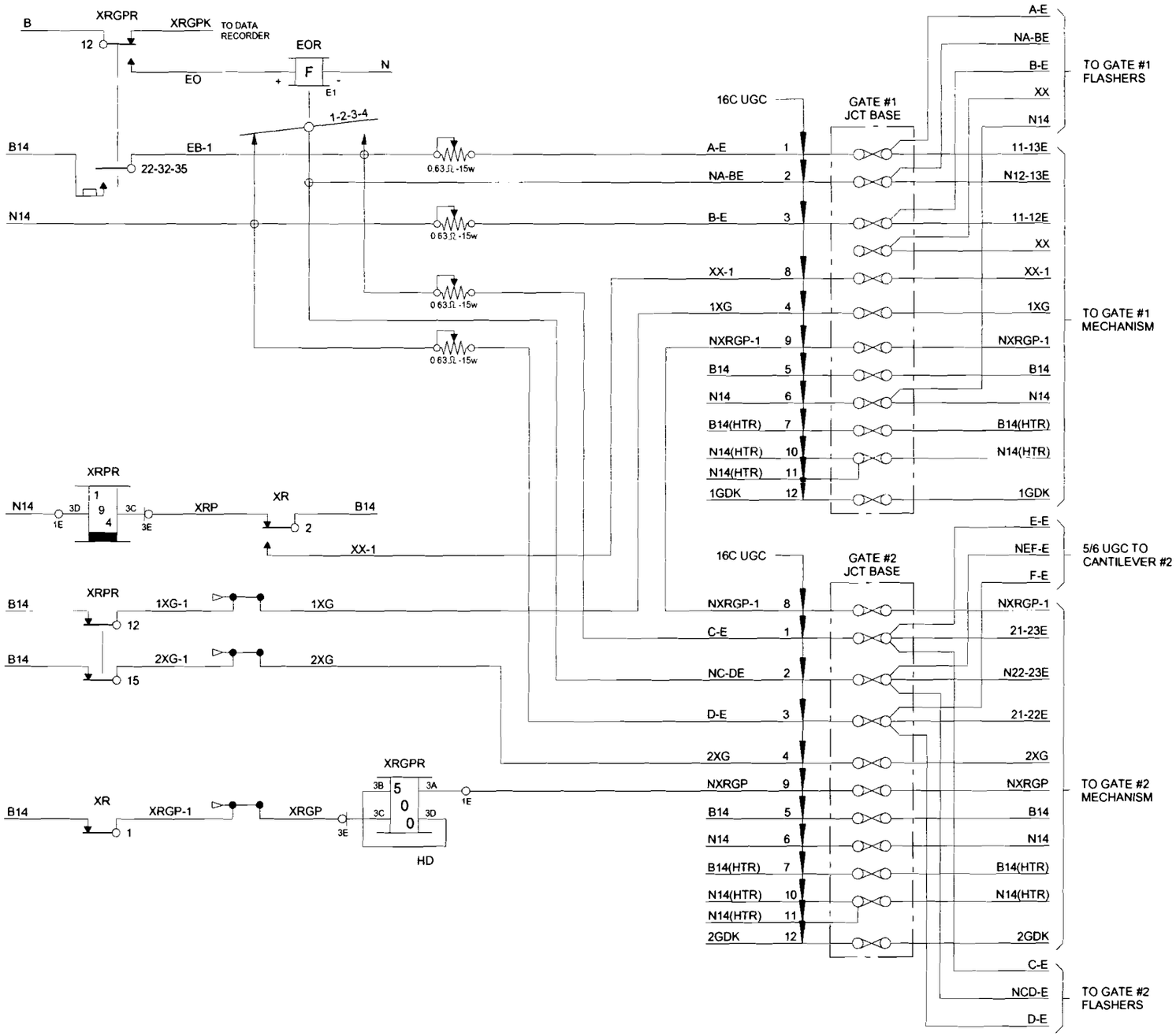

SIGNAL #1

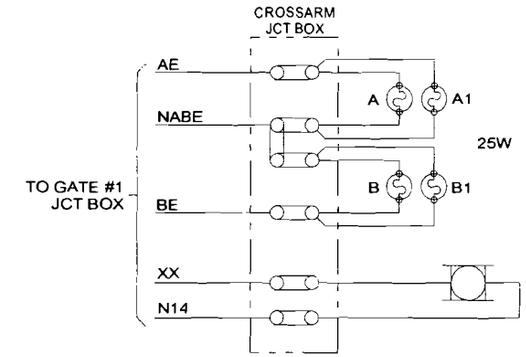

SIGNAL #2

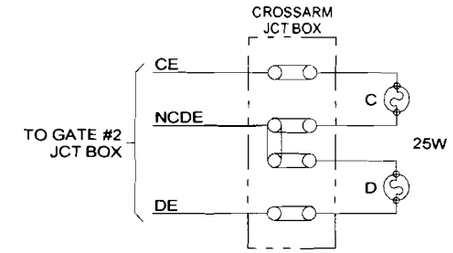

REGION MIDWEST	Illinois Central — COMMUNICATIONS & SIGNALS, ENGINEERING DEPARTMENT
DISTRICT PEORIA	SD 1047 C MP 113.45 TO 114.00
FILENAME 11345C07	COLES, IL
DESIGNER AVS / DATE 8/19/04	CH 18
SHEET NO. 7 OF 11	GATE CONTROL CIRCUITS

5 | 4 | 3 | 2 | 3-1-06 | 1 | REVISIONS

GATE #1 IN VERTICAL POSITION

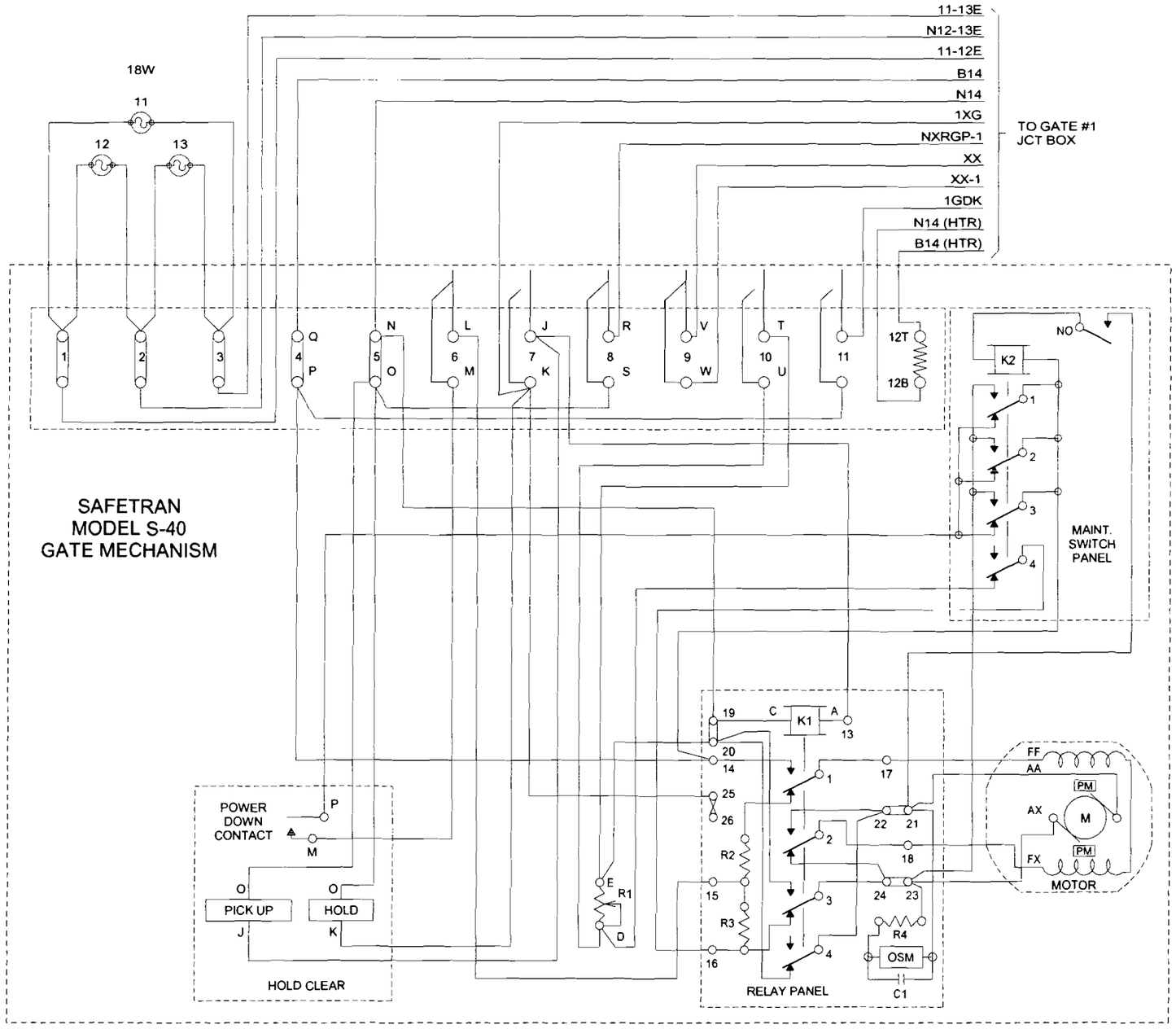

CIRCUIT CONTROLLER OPERATION AND FUNCTIONS		
CONTACT SPACE	CONTACT CLOSED AT	FUNCTION OF CONTACT
6 (L-M)	45-90 DEG.	POWER DOWN CONTROL
7 (J-K)	0-89 DEG.	POWER UP CONTROL
8 (R-S)	83-90 DEG.	GPXR CONTROL
9 (V-W)	5-90 DEG.	BELL
10 (T-U)	0-5 DEG.	MOTOR SNUB CONTROL
11	0-5 DEG.	GDK

REGION MIDWEST	Illinois Central	COMMUNICATIONS & SIGNALS, ENGINEERING DEPARTMENT
DISTRICT PEORIA	SD 1047 C MP 113.45 TO 114.00	
FILENAME 11345C08	COLES, IL	
DESIGNER AVS / DATE 8-19-04	CH 18	
SHEET NO. 8 OF 11	GATE #1 CONTROL CIRCUITS	

5 4 3 2 3-1-06 1 REVISIONS

GATE #2 IN VERTICAL POSITION

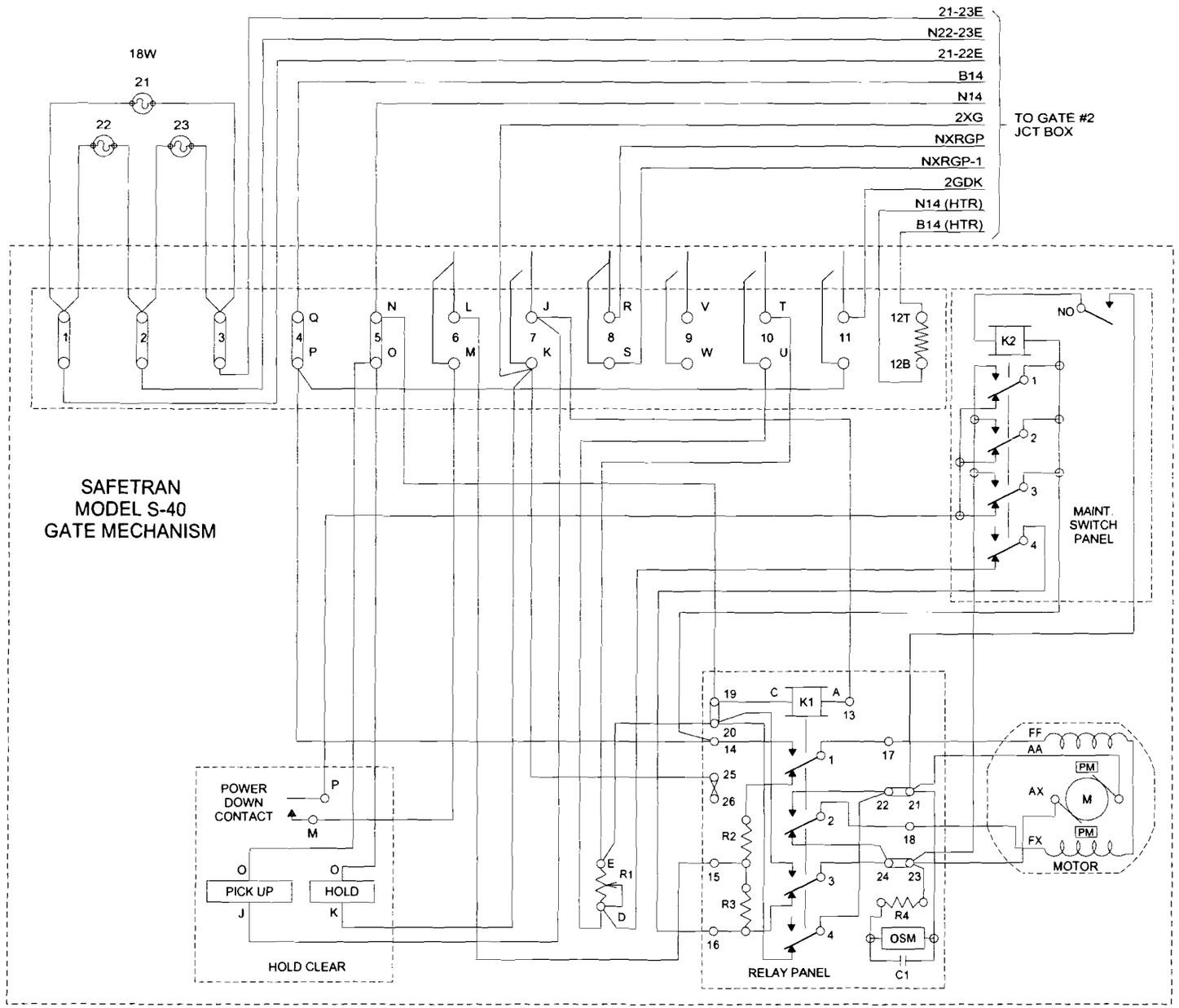

CANTILEVER #2

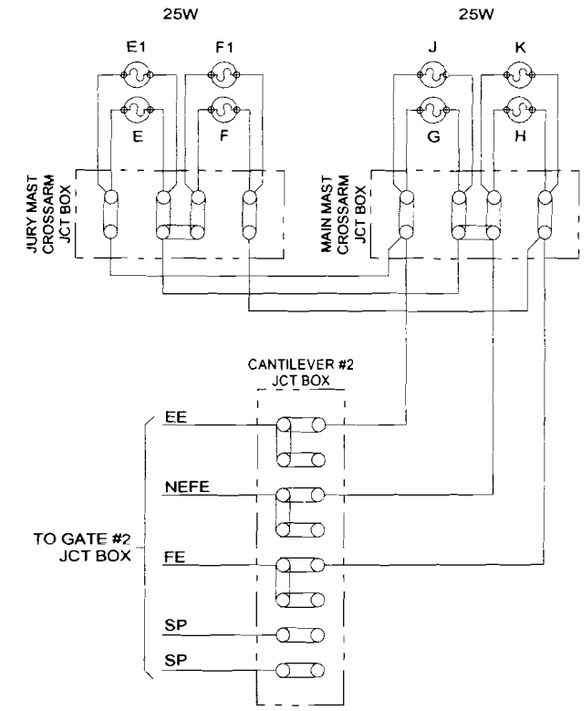

CIRCUIT CONTROLLER OPERATION AND FUNCTIONS		
CONTACT SPACE	CONTACT CLOSED AT	FUNCTION OF CONTACT
6 (L-M)	45-90 DEG.	POWER DOWN CONTROL
7 (J-K)	0-89 DEG.	POWER UP CONTROL
8 (R-S)	83-90 DEG.	GPXR CONTROL
9 (V-W)	0-5 DEG.	BELL
10 (T-U)	0-5 DEG.	MOTOR SNUB CONTROL
11	0-5 DEG.	GDK

REGION MIDWEST	Illinois Central — COMMUNICATIONS & SIGNALS, ENGINEERING DEPARTMENT
DISTRICT PEORIA	SD 1047 C MP 113.45 TO 114.00
FILENAME 11345C09	COLES, IL
DESIGNER AVS / DATE 8-19-04	CH 18
SHEET NO. 9 OF 11	GATE #2 CONTROL CIRCUITS

5 4 3 2 3-1-06 1 REVISIONS

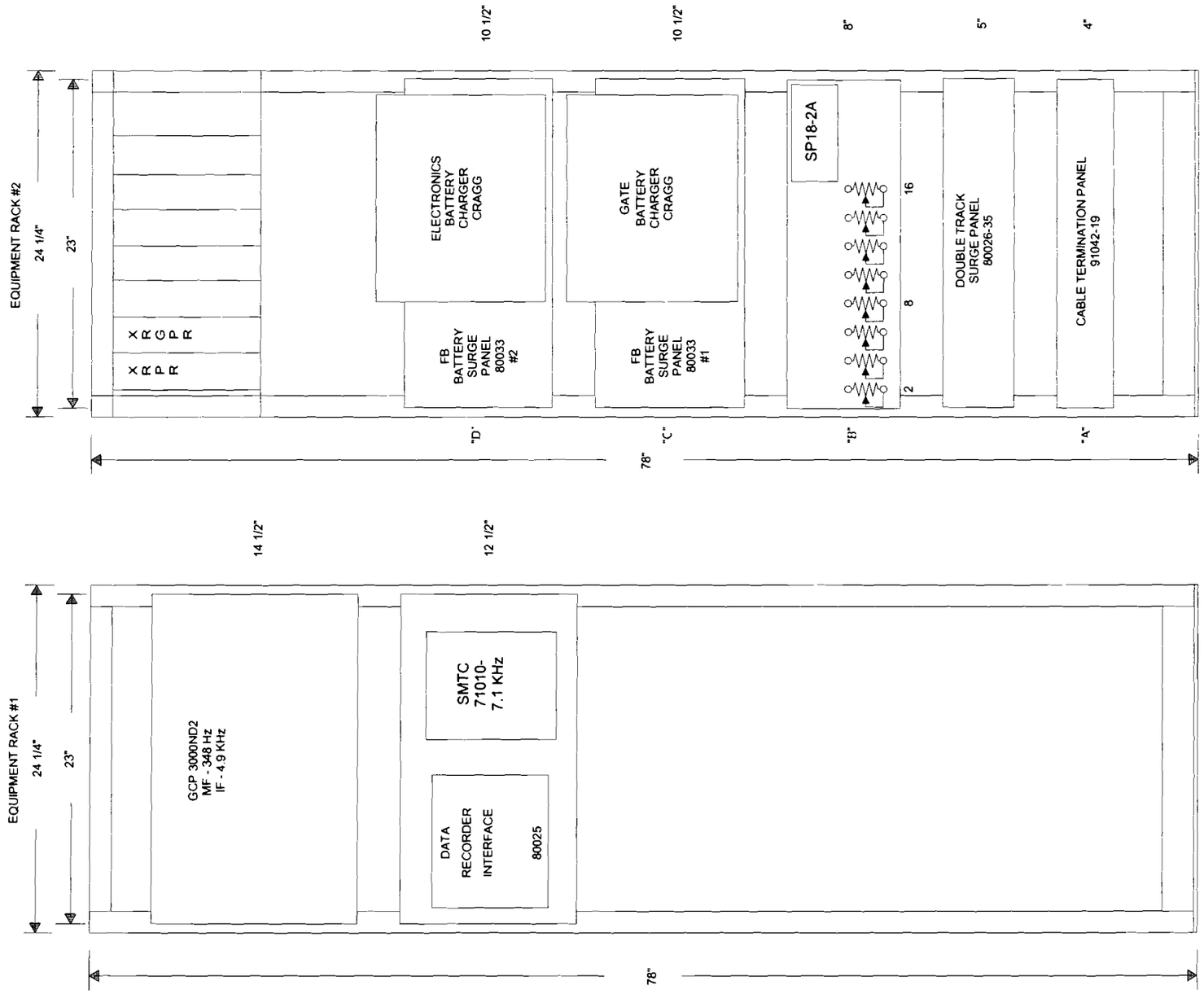

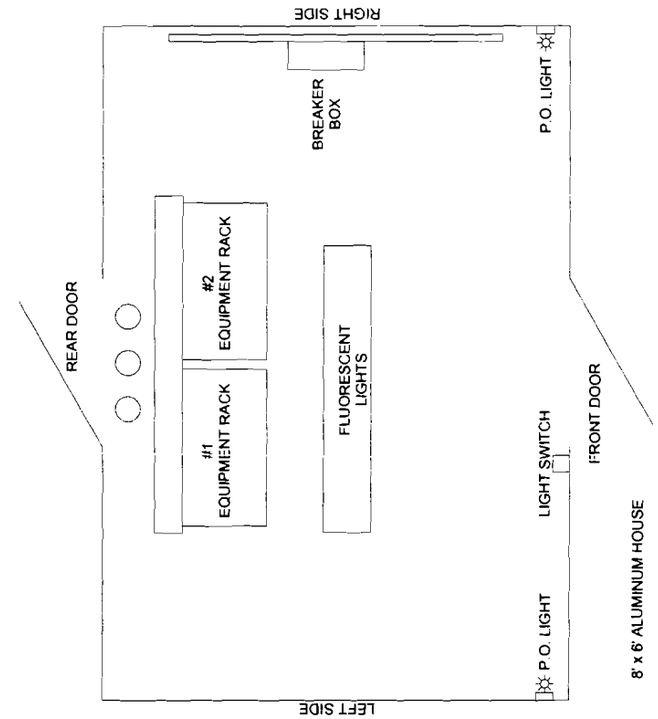

REGION	MIDWEST
DISTRICT	PEORIA
FILENAME	11345C10
DESIGNER	MKN
DATE	12/8/97
SHEET NO.	10 OF 11

Illinois Central

COMMUNICATIONS & SIGNALS, ENGINEERING DEPARTMENT

SD 1047 C MP 113.45 TO 114.00

Coles, IL

CH 18

Rack Layout

5	4	3	3-1-06	2	6-18-98	1	REVISIONS

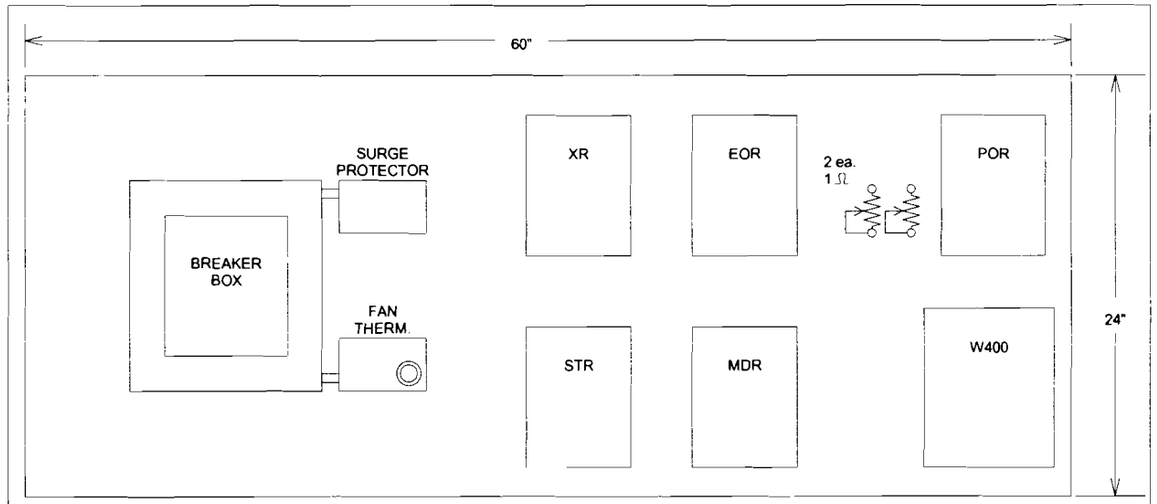

8'x6'
RIGHT SIDE

REGION MIDWEST	Illinois Central	COMMUNICATIONS & SIGNALS, ENGINEERING DEPARTMENT
DISTRICT PEORIA		
FILENAME 11345C11	SD 1047 C MP 113.45 TO 114.00	
DESIGNER MKN / DATE 12/8/97	Coles, IL	
SHEET NO. 11 OF 11	CH 18 House Wall Layout	

5	4	3	3-1-06	2	6-18-98	1	REVISIONS