Approaches should be measured from the spot that a train is detected to have arrived at the crossing. Minimum 20' from edge of road.

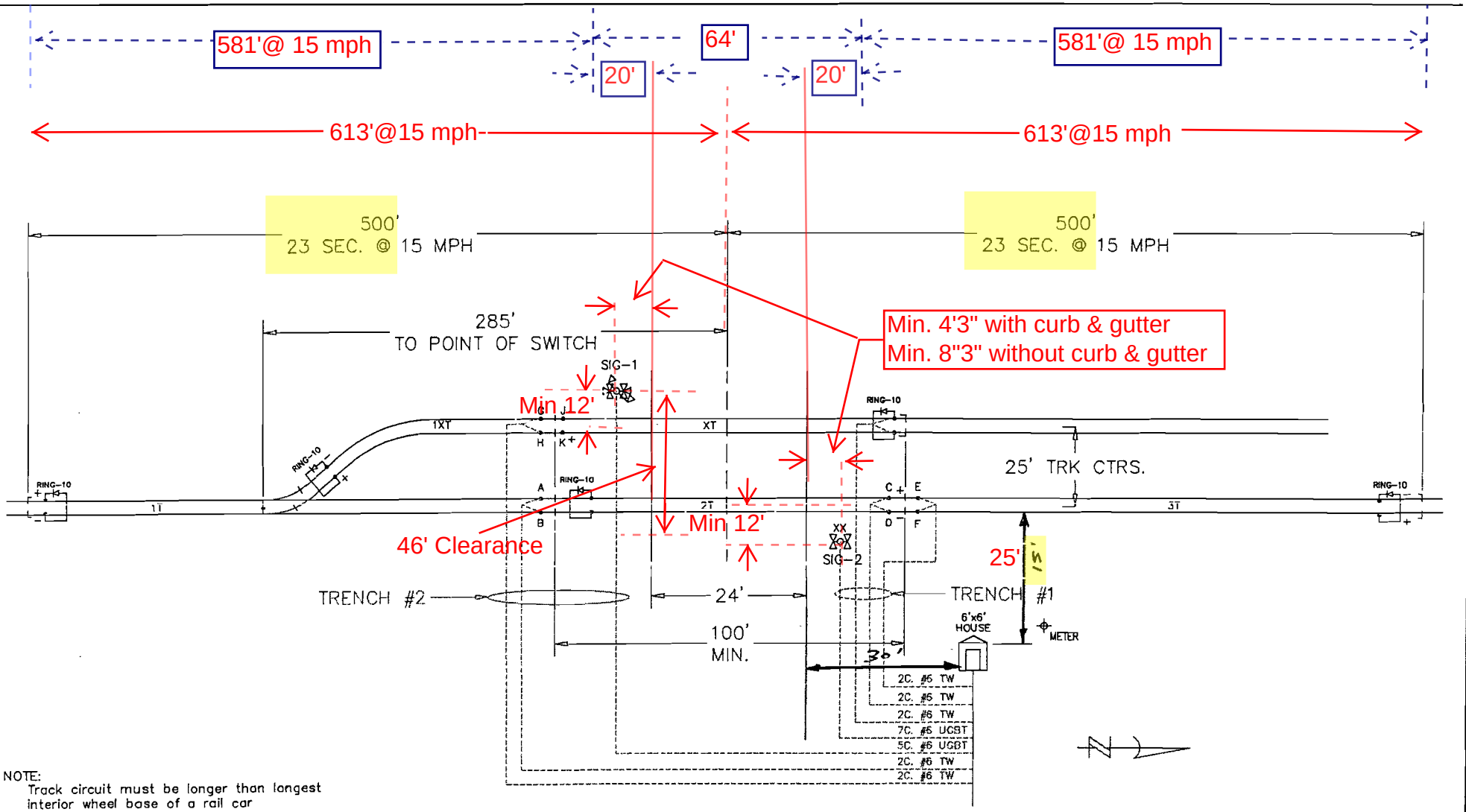

NOTE:
Track circuit must be longer than longest interior wheel base of a rail car

All traffic control devices shall be consistent with the design and application of the standards contained in the "Manual on Uniform Traffic Control Devices", provided by the U.S. Department of Transportation and Federal Highway Administration.

ESTIMATED TOTAL CABLE REQUIREMENTS
200FT. 5-COND. #6 UGBT
50FT. 7-COND. #6 UGBT
500FT. 2-COND #6 TWISTED TRACK WIRE

LEGEND

1. = TWO WAY INDICATION FLASHING LIGHT SIGNAL
2. = ONE WAY INDICATION FLASHING LIGHT SIGNAL
3. XX = BELL
4. = RING 10 TRACK RECTIFIER
5. ⌐ OR ⌐ = INSULATED RAIL JOINT

THE OPERATION OF THE CIRCUITS AND EQUIPMENT REPRESENTED CANNOT BE FINALLY CHECKED UNTIL CONNECTED TO FORM A COMPLETE SYSTEM OR PORTION OF SUCH SYSTEM. SUCH SYSTEM OR PORTION OF SUCH SYSTEM MUST UNDERGO A COMPLETE CIRCUIT CONTACT SELECTION (BREAKDOWN) & SERVICE (OPERATIONAL) TEST PRIOR TO BEING PLACED INTO SERVICE.

L&W INDUSTRIES, INC.
SPRINGFIELD, MO

DATE	10/01/07
DESIGNED	L&W INDS.
DRAWN:	L&W INDS.
CHECKED	

THE BLOOMER LINE
GIBSON CITY, IL

ILLINOIS ROUTE 116
INSULATED JOINT LAYOUT DIAGRAM
CULLOM, ILLINOIS

DRAWN L&W INDS.	DATE 10/01/07		
CHECKED		SIZE C	REF. No. 291 450X
APPROVED			

DWG NO. B012 REV

SHEET 1 OF 1

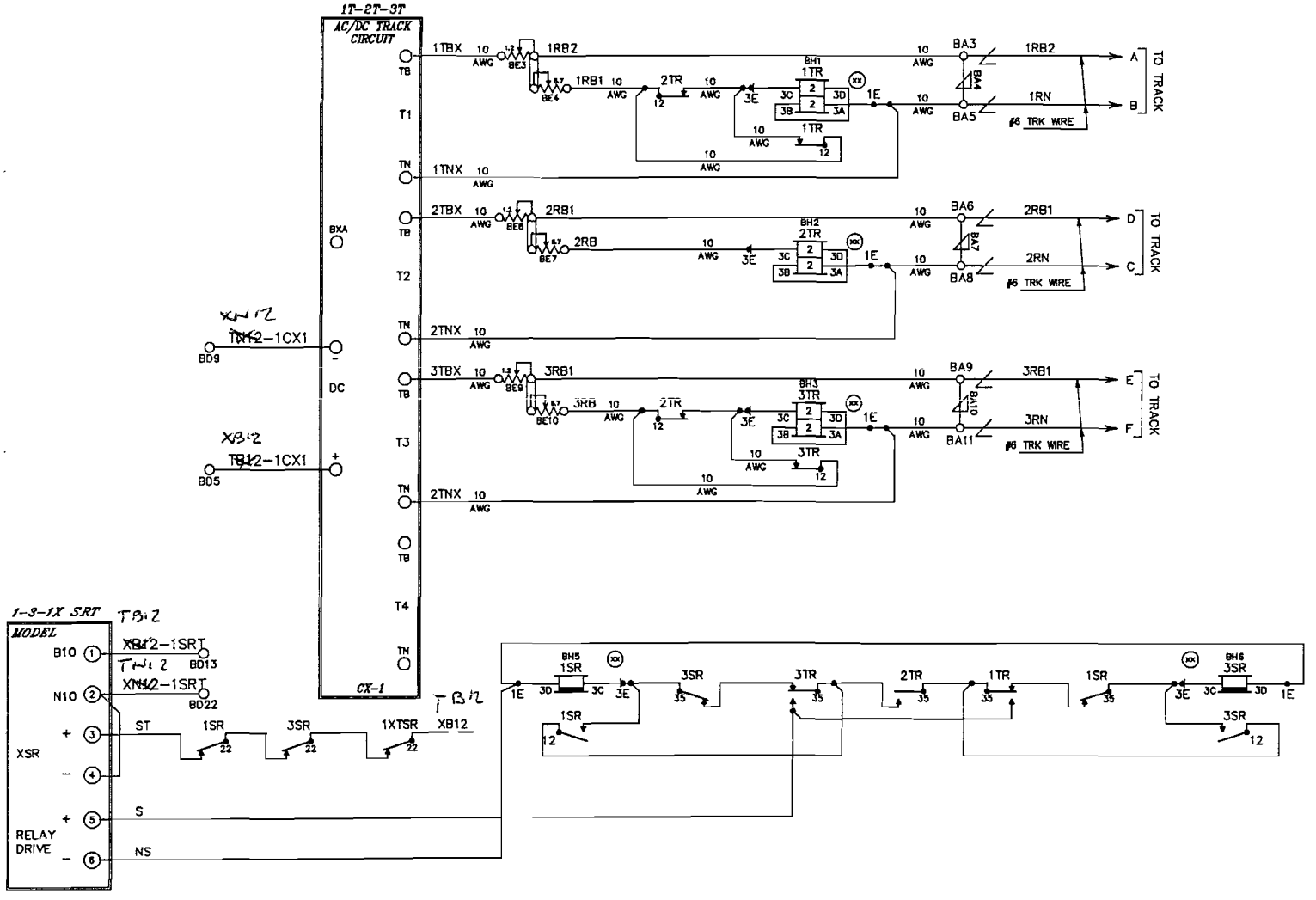

THE OPERATION OF THE CIRCUITS AND EQUIPMENT REPRESENTED CANNOT BE FINALLY CHECKED UNTIL CONNECTED TO FORM A COMPLETE SYSTEM OR PORTION OF SUCH SYSTEM. SUCH SYSTEM OR PORTION OF SUCH SYSTEM MUST UNDERGO A COMPLETE CIRCUIT CONTACT SELECTION (BREAKDOWN) & SERVICE (OPERATIONAL) TEST PRIOR TO BEING PLACED INTO SERVICE.

L&W INDUSTRIES, INC.
SPRINGFIELD, MO

DATE	10/08/07
DESIGNED	LWI
DRAWN:	LWI
CHECKED	

THE BLOOMER LINE
GIBSON CITY, IL

ILLINOIS ROUTE 116
RAIL-HIGHWAY GRADE CROSSING WARNING SYSTEM
TRAIN DETECTION CIRCUITS

DRAWN LWI	DATE 10/08/07	SIZE C	REF. No. BL012
CHECKED		DWG NO. BL012-02	REV
APPROVED		SHEET 2 OF	

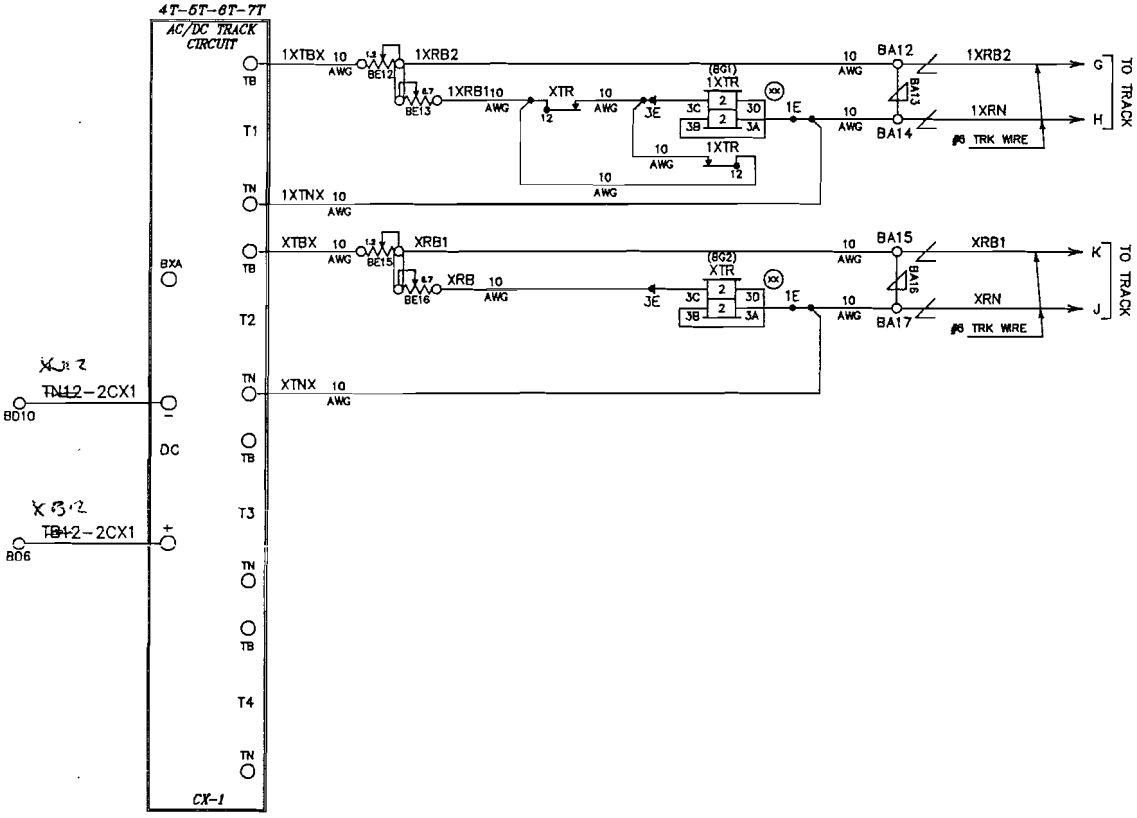

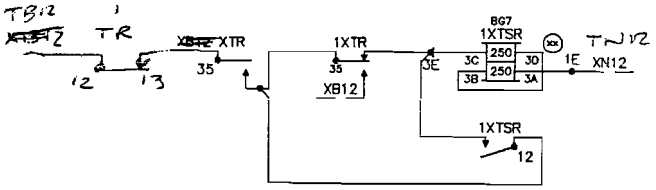

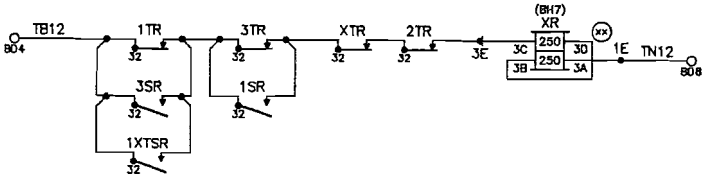

THE OPERATION OF THE CIRCUITS AND EQUIPMENT REPRESENTED CANNOT BE FINALLY CHECKED UNTIL CONNECTED TO FORM A COMPLETE SYSTEM OR PORTION OF SUCH SYSTEM. SUCH SYSTEM OR PORTION OF SUCH SYSTEM MUST UNDERGO A COMPLETE CIRCUIT CONTACT SELECTION (BREAKDOWN) & SERVICE (OPERATIONAL) TEST PRIOR TO BEING PLACED INTO SERVICE.

L&W INDUSTRIES, INC.
SPRINGFIELD, MO

DATE	10/08/07
DESIGNED	LWI
DRAWN:	LWI
CHECKED	

THE BLOOMER LINE
GIBSON CITY, IL

ILLINOIS ROUTE 116
RAIL-HIGHWAY GRADE CROSSING WARNING SYSTEM
TRAIN DETECTION & DIRECTIONAL STICK CIRCUITS

DRAWN LWI	DATE 10/08/07	SIZE C	REF. No. BL012
CHECKED		DWG NO. BL012-03	REV
APPROVED		SHEET 3 OF	

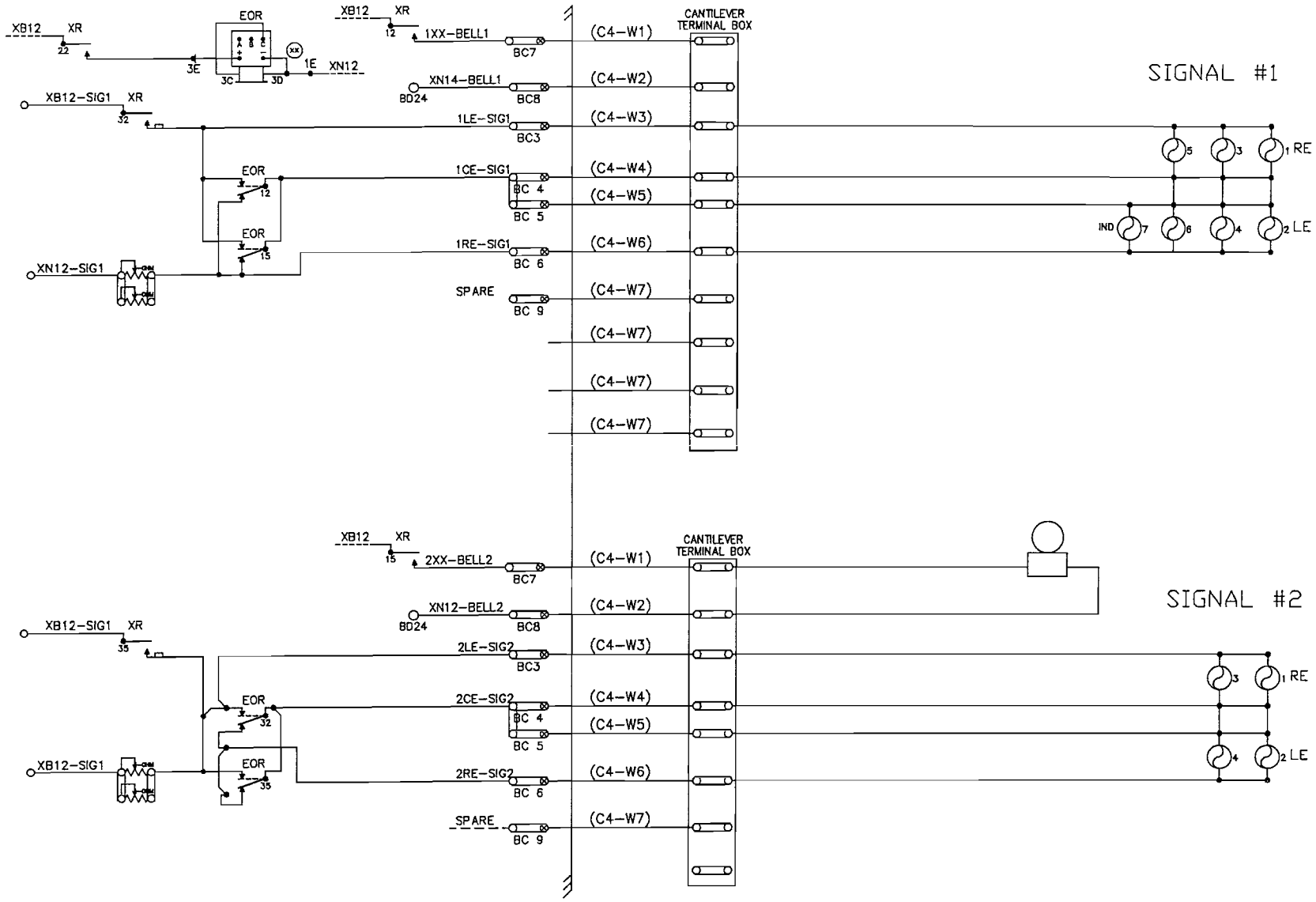

NOTE:
USE #10 AWG WIRE FOR LIGHT CIRCUITS

THE OPERATION OF THE CIRCUITS AND EQUIPMENT REPRESENTED CANNOT BE FINALLY CHECKED UNTIL CONNECTED TO FORM A COMPLETE SYSTEM OR PORTION OF SUCH SYSTEM. SUCH SYSTEM OR PORTION OF SUCH SYSTEM MUST UNDERGO A COMPLETE CIRCUIT CONTACT SELECTION (BREAKDOWN) & SERVICE (OPERATIONAL) TEST PRIOR TO BEING PLACED INTO SERVICE.

NOT TO SCALE

L&W INDUSTRIES, INC.
SPRINGFIELD, MO

DATE	10/08/07
DESIGNED	ROLLO WATKINS
DRAWN:	ROLLO WATKINS
CHECKED	

THE BLOOMER LINE
GIBSON CITY, IL

ILLINOIS ROUTE 116
RAIL-HIGHWAY GRADE CROSSING WARNING SYSTEM
FLASHING LIGHT SIGNAL CIRCUITS

DRAWN	DATE
LWI	10/08/07
CHECKED	
APPROVED	

SIZE	REF. No.	DWG NO.	REV
C	BL012	BL012-05	

SHEET 4 OF

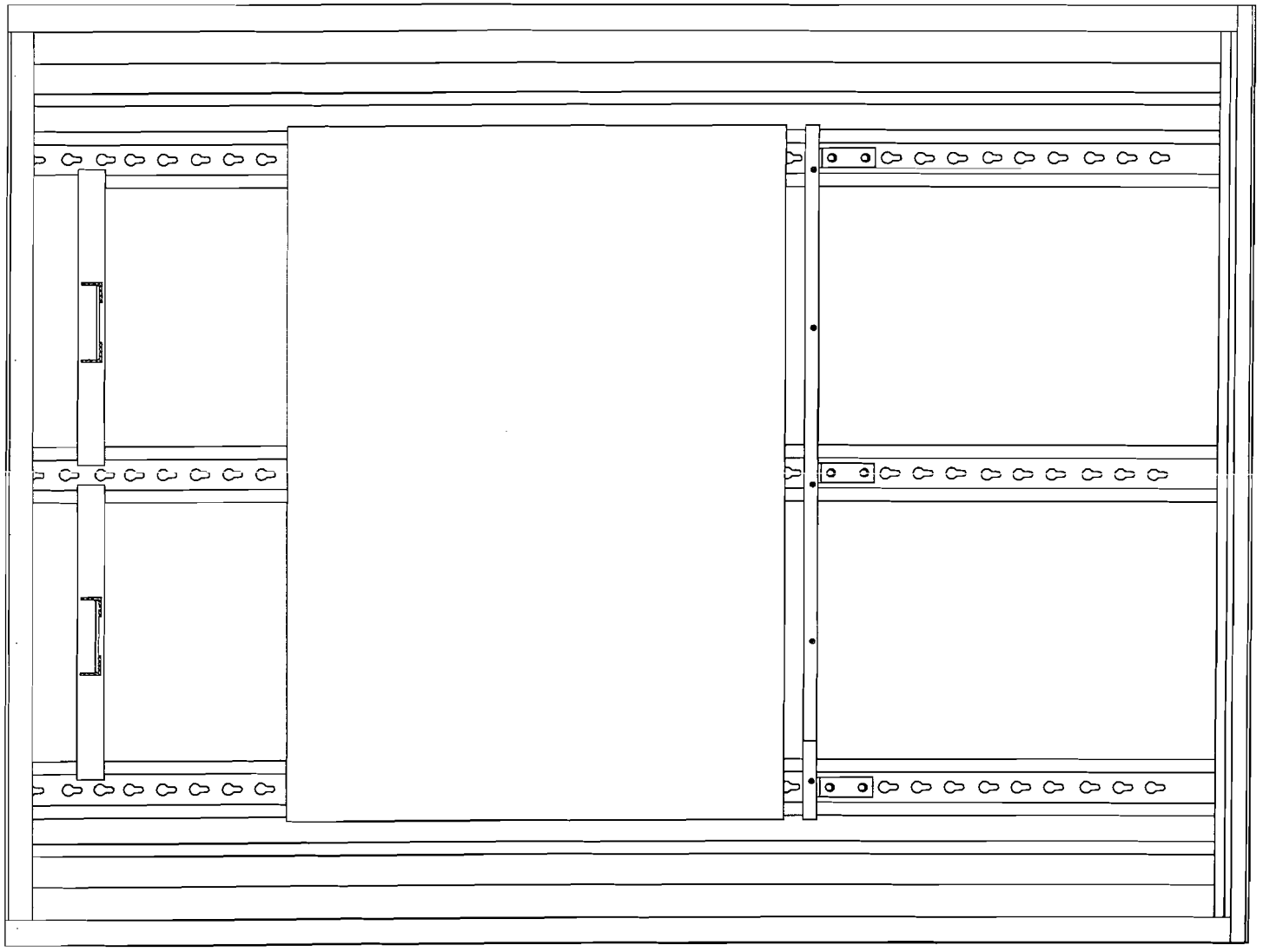

SIDE "A"

THE OPERATION OF THE CIRCUITS AND EQUIPMENT REPRESENTED CANNOT BE FINALLY CHECKED UNTIL CONNECTED TO FORM A COMPLETE SYSTEM OR PORTION OF SUCH SYSTEM. SUCH SYSTEM OR PORTION OF SUCH SYSTEM MUST UNDERGO A COMPLETE CIRCUIT CONTACT SELECTION (BREAKDOWN) & SERVICE (OPERATIONAL) TEST PRIOR TO BEING PLACED INTO SERVICE.

NOT TO SCALE

L&W INDUSTRIES, INC.
SPRINGFIELD, MO

DATE	10/08/07
DESIGNED	ROLLO WATKINS
DRAWN:	ROLLO WATKINS
CHECKED	

THE BLOOMER LINE
GIBSON CITY, IL

ILLINIOS ROUTE 116
RAIL-HIGHWAY GRADE CROSSING WARNING SYSTEM
LEFT INSIDE WALL

DRAWN LWI	DATE 10/08/07	SIZE C	REF. No. BL012	DWG NO. BL012-05	REV
CHECKED					
APPROVED				SHEET 5	OF

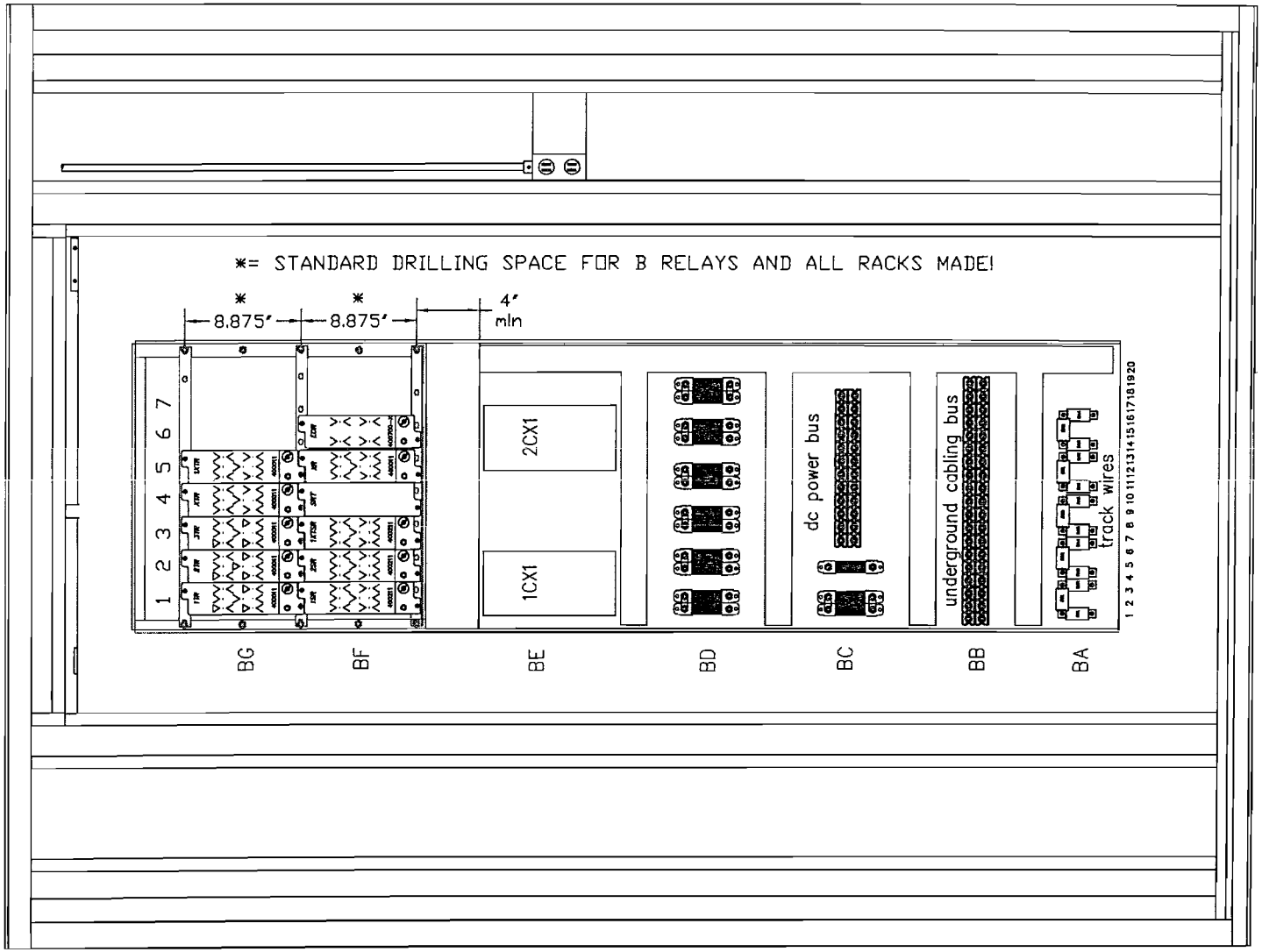

SIDE "B"

THE OPERATION OF THE CIRCUITS AND EQUIPMENT REPRESENTED CANNOT BE FINALLY CHECKED UNTIL CONNECTED TO FORM A COMPLETE SYSTEM OR PORTION OF SUCH SYSTEM. SUCH SYSTEM OR PORTION OF SUCH SYSTEM MUST UNDERGO A COMPLETE CIRCUIT CONTACT SELECTION (BREAKDOWN) & SERVICE (OPERATIONAL) TEST PRIOR TO BEING PLACED INTO SERVICE.

NOT TO SCALE

L&W INDUSTRIES, INC.
SPRINGFIELD, MO

DATE	10/14/07
DESIGNED	LWI
DRAWN:	LWI
CHECKED	

THE BLOOMER LINE
GIBSON CITY, IL

BLOOMER LINE
HIGHWAY 116 RAIL-HIGHWAY GRADE CROSSING
PROPOSED TERMINAL LAYOUT

DRAWN LWI	DATE	SIZE C	REF. No.
CHECKED		DWG NO. B012-	REV
APPROVED		SHEET 7 OF 1	

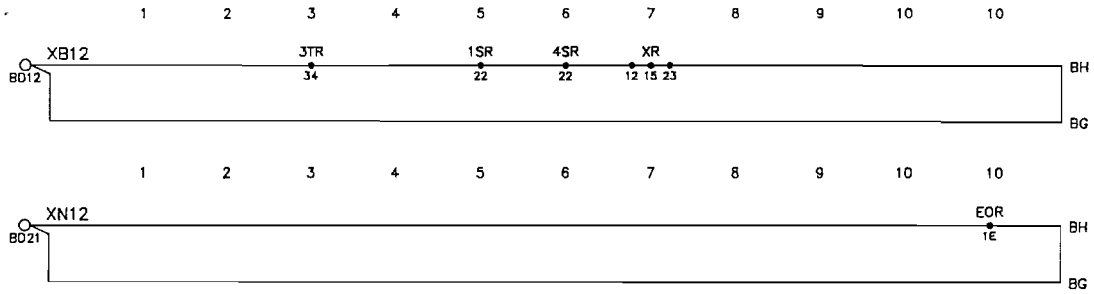

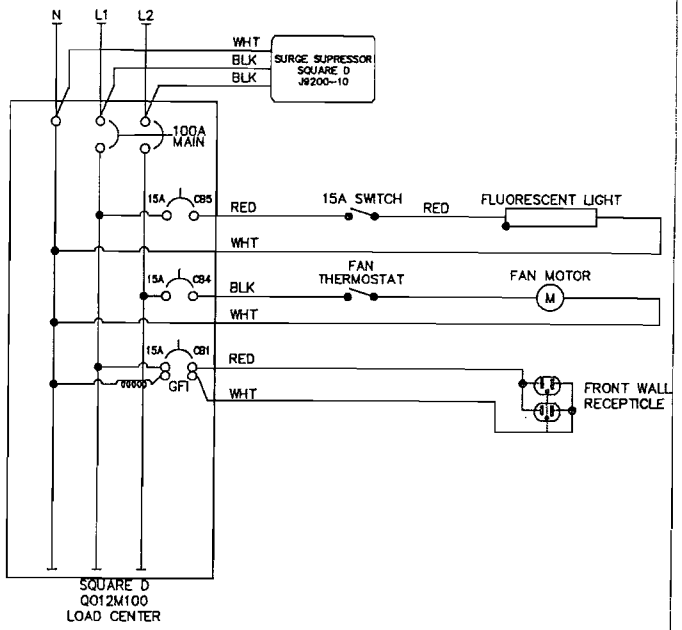

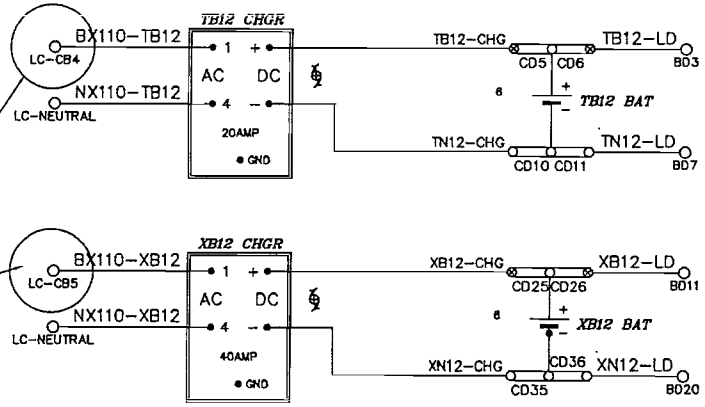

ROBERT NOTE
WHICH BREAKER
USED HERE

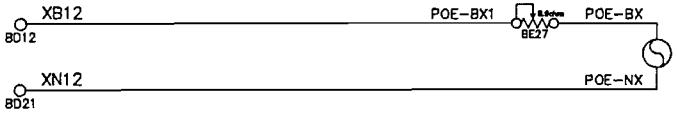

NOTES

1 – GROUND FAULT CIRCUIT-INTERUPTER (GFCI) MUST BE USED ON ALL CIRCUITS SERVING CONVENIENCE OUTLETS AND ANY EQUIPMENT OUTSIDE THE BUNGALOW.

2 – MINIMUM WIRE SIZE: 15 AMP – No. 14 AWG, THHN OR THWN SOLID.
20 AMP – No. 12 AWG, THHN OR THWN SOLID.
30 AMP – No. 10 AWG, THHN OR THWN SOLID.

3 – GENERAL COLOR CODE FOR ALL AC CIRCUITS, L1=RED, L2=BLACK, NEUTRAL=WHITE, SAFETY GROUND=GREEN.

THE OPERATION OF THE CIRCUITS AND EQUIPMENT REPRESENTED CANNOT BE FINALLY CHECKED UNTIL CONNECTED TO POWER AND COMPLETE SYSTEM OR PORTION OF SUCH SYSTEM. SUCH SYSTEM OR PORTION OF SUCH SYSTEM MUST UNDERGO A COMPLETE CIRCUIT CONTACT SELECTION (BREAKDOWN) & SERVICE (OPERATIONAL) TEST PRIOR TO BEING PLACED INTO SERVICE.

L&W INDUSTRIES, INC.
SPRINGFIELD, MO

DATE	10/08/07
DESIGNED	LWI
DRAWN:	LWI
CHECKED	

THE BLOOMER LINE
GIBSON CITY, IL

ILLINOIS ROUTE 116
RAIL-HIGHWAY GRADE CROSSING WARNING SYSTEM
AC & DC POWER CIRCUITS

DRAWN LWI	DATE 10/08/07	SIZE C	REF. No. BL012
CHECKED		DWG NO. BL012-08	REV
APPROVED		SHEET 8	OF