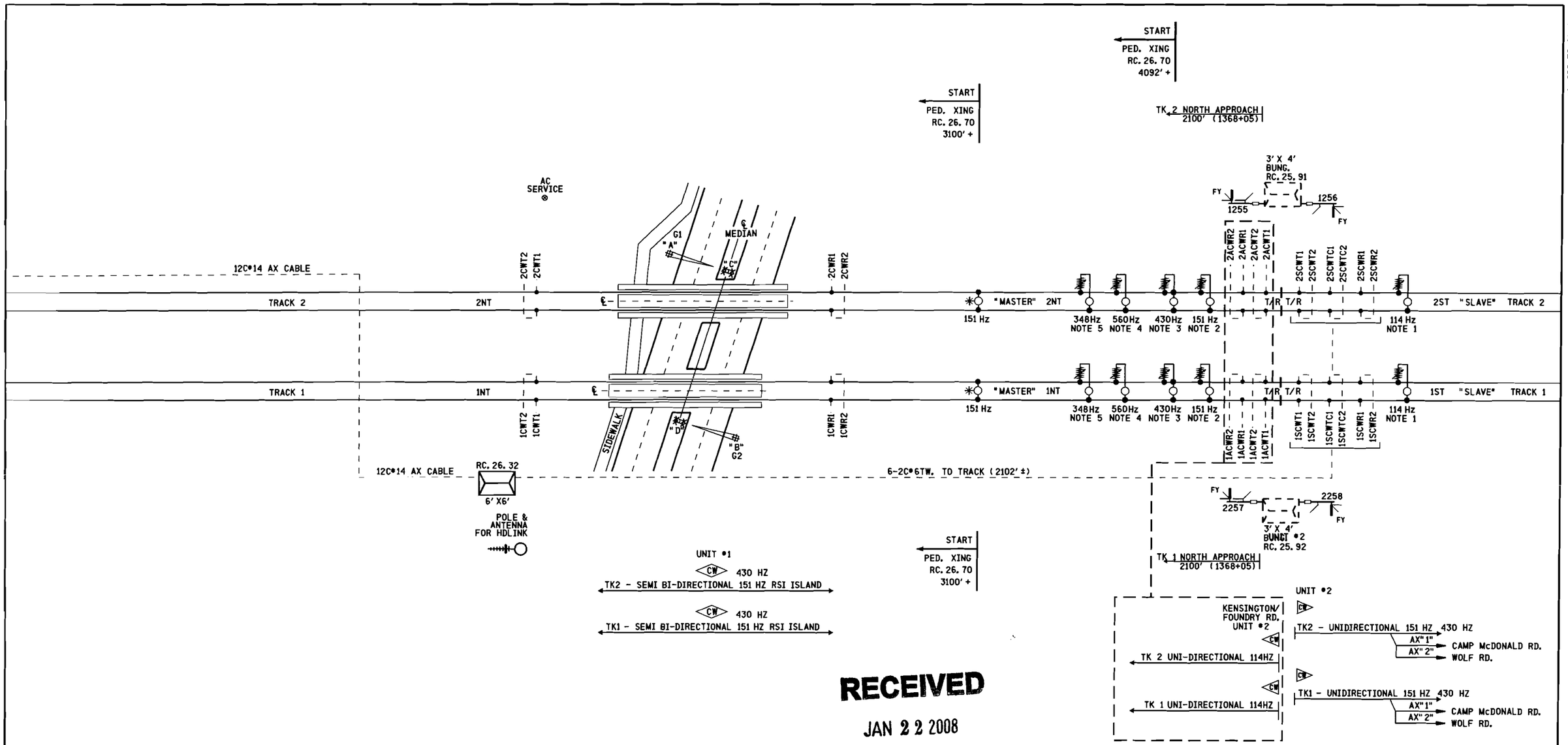

RECEIVED
JAN 22 2008
Illinois Commerce Commission
RAIL SAFETY SECTION

NOTES:

- DENOTES HARMON NARROW BAND SHUNT NBS-2 PN•250568-151

1- DENOTES HARMON MULTI FREQUENCY NARROW BAND SHUNT FSS-2A PN•250850-000 (86-267Hz) WITH FSS LOAD PN•227032-013 (3500 FEET).

2- DENOTES HARMON NARROW BAND SHUNT NBS-2 PN•250568-151 WITH DUMMY LOAD (2000 FEET).

3- DENOTES HARMON NARROW BAND SHUNT NBS-2 PN•250568-430 WITH DUMMY LOAD (1100 FEET).

4- DENOTES HARMON NARROW BAND SHUNT NBS-2 PN•250568-560 WITH 1186A-1 DUMMY LOAD PN•250069-001 (1000 FEET).

5- DENOTES HARMON NARROW BAND SHUNT NBS-2 PN•250568-348 WITH 1186A-1 DUMMY LOAD PN•250069-001 (1000 FEET).

LEGEND:

CW DENOTES UNI-DIRECTIONAL CONSTANT WARNING/MOTION SENSING DEVICE

CW DENOTES BI-DIRECTIONAL OR SIMULATED BI-DIRECTIONAL CONSTANT WARNING/MOTION SENSING DEVICE

PROPOSED
DES. No. 07-0419
RED-IN YELLOW-OUT
AS INSTALLED
DATE _____
BY _____

DOT •689 681K

PROPOSED D	M	Y	REVISIONS	D	C	COMPLETED D	M	Y	C
			FIELD AS-BUILT	SHB		31	05	05	SSS
			NEW BORDER/TITLE BLOCK			15	10	07	SSH
16	10	07	NEW JOINTS PED XING	SSH	MGD				

REGION SOUTHERN
SUB. WAUKESHA
CN
SIGNALS AND COMMUNICATIONS
DES. DKM
8 FEBRUARY 2001
CH. JCL
TRACK AND CIRCUIT DIAGRAM
CROSSING WARNING DEVICES
EUCLID ROAD
COOK, IL
W WK-026.32-01

14

wk-026.32-01.dgn
29-NOV-2007

689 681K

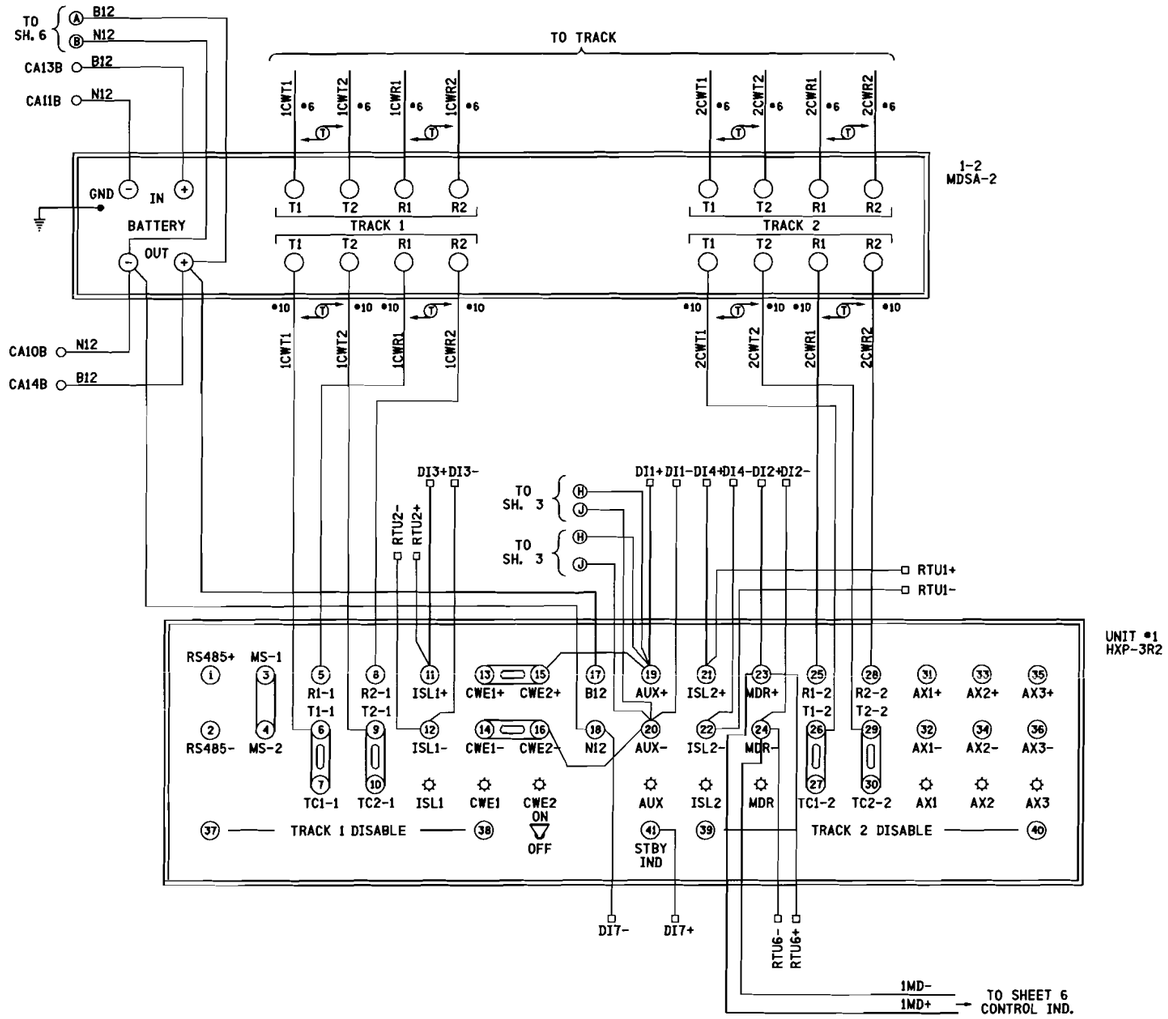

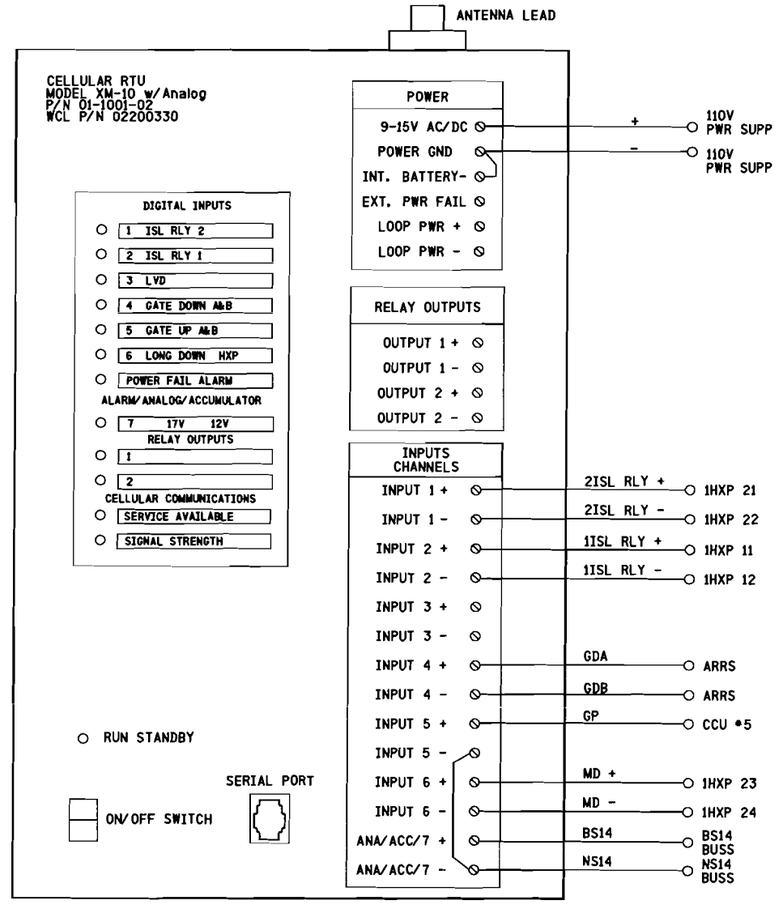

INPUTS TIME ALARMS

1. 1800 SECOND NC
2. 1800 SECOND NC
3. NC 17-10V
4. NC
5. NC
6. LONG DOWN TIME (30 MIN) 1800 SECOND NC
7. POWER OFF (2 HR. 46 MIN 9999 SEC.)
   4 HOURS TIME GENERATES SECOND ALARM REPORT ON RETURN TO NORMAL

NOTES:

1. ALL WIRE THIS SHEET TO BE #10 AWG FLEX UNLESS OTHERWISE NOTED.
2. (T) TWISTED PAIR 2 TURNS PER FOOT.

□ DENOTES CONNECTION TO RIM

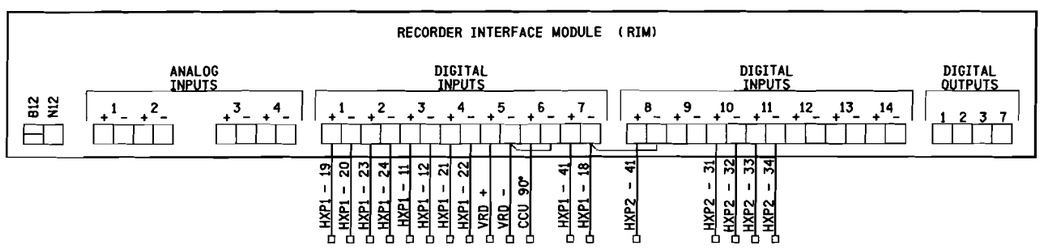

PROPOSED
DES. No. 07-0419
RED-IN YELLOW-OUT
AS INSTALLED
DATE _____
BY _____

DOT #689 681K

PROPOSED D	M	Y	REVISIONS	D	C	COMPLETED D	M	Y	C
			FIELD AS-BUILT	SHB		31	05	05	SSS
			NEW BORDER/TITLE BLOCK			15	10	07	SSH
16	10	07	NEW JOINTS PED XING	SSH	MGD				

REGION SOUTHERN
SUB. WAUKESHA
SIGNALS AND COMMUNICATIONS
8 FEBRUARY 2001
DES. DKM
CH. JCL

HXP-3R2 UNIT #1 WIRING PLAN
EUCLID ROAD
COOK, IL

W WK-026.32-02

wk-026.32-02.dgn
29-NOV-2007

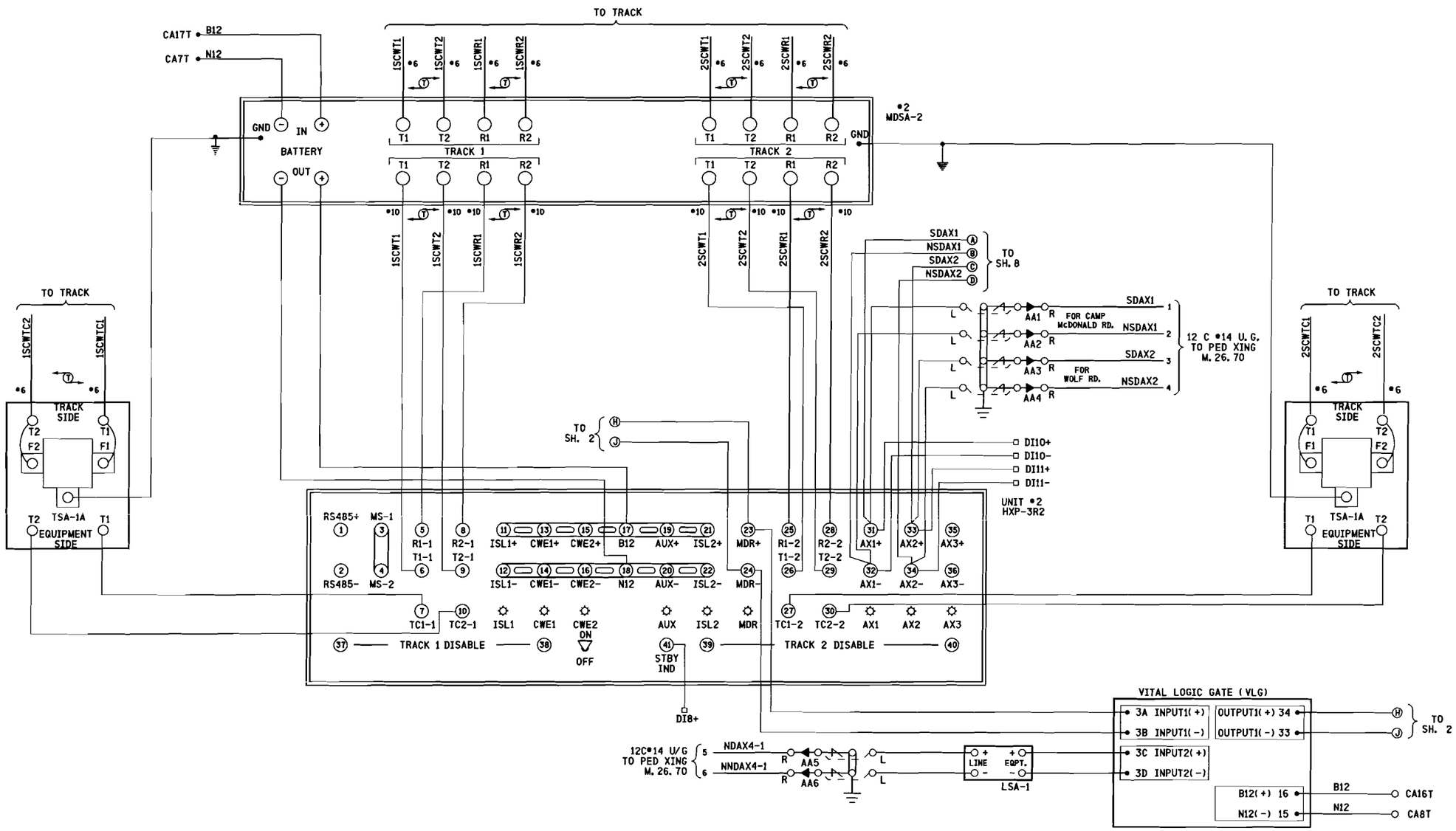

NOTES:

1. ALL WIRE THIS SHEET TO BE •10 AWG FLEX UNLESS OTHERWISE NOTED.
2. ⓣ TWISTED PAIR 2 TURNS PER FOOT.

□DENOTES CONNECTION TO RIM

PROPOSED
DES. No. 07-0419
RED-IN YELLOW-OUT

AS INSTALLED
DATE _____
BY _____

DOT •689 681K

PROPOSED D	M	Y	REVISIONS	D	C	COMPLETED D	M	Y	C
			FIELD AS-BUILT	SHB		31	05	05	SSS
			NEW BORDER/TITLE BLOCK			15	10	07	SSH
16	10	07	NEW JOINTS PED XING	SSH	MGD				

REGION SOUTHERN
SUB. WAUKESHA
SIGNALS AND COMMUNICATIONS
8 FEBRUARY 2001
DES. DHS
CH.

HXP-3R2 UNIT •2 WIRING PLAN
EUCLID ROAD
COOK, IL

W WK-026. 32-03

wk-026. 32-03. dgn
29-NOV-2007

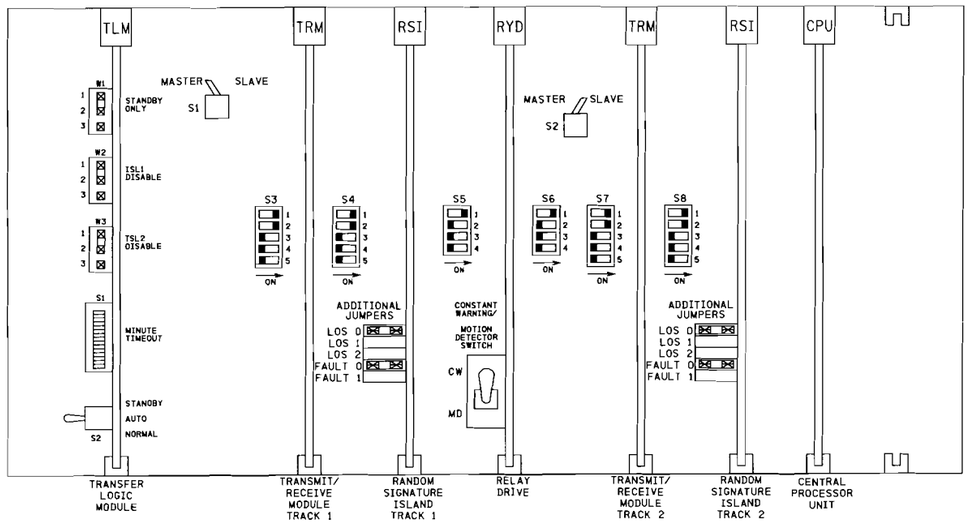

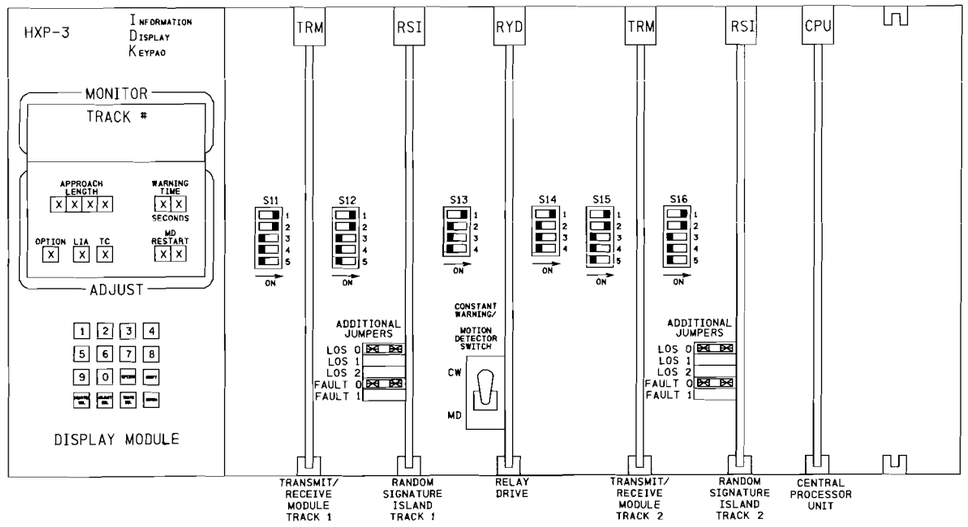

NOTE:
HCA-3 MODULE PLUGS INTO
THE HXP-3 RMM CARD SLOT.

INPUT APPROACH LENGTH
MEASURED DISTANCE FOR
THE SHORTER DISTANCE FROM
TRACK LEADS TO TERMINATION
SHUNT NORTH OR SOUTH.

HXP-3R2 SET-UP SHEET			
LOCATION			
OPTION 90 (CABINET #)			
	DEFAULT	TRACK 1	TRACK 2
APPROACH LENGTH	9999 ft.	?' 4172 ft.	?' 4172 ft.
WARNING TIME	99 S	36 sec.	36 sec.
LUMPED IMPEDANCE ADJUSTMENT (LIA)	0	FIELD ADJUST	FIELD ADJUST
TRANSMITTER CHECK (TC)	0	<470	<470
MOTION DETECT RESTART	99%	0	0
OPTION 1 TRACK ENABLE (TKENA)	UP	UP	UP
OPTION 2 TRACK FREQUENCY (TKFQ)	0 HZ	STRAP 430 151 HZ	STRAP 430 151 HZ
OPTION 3 CONSTANT WARNING/MOTION (CW/MD)	d	C	C
OPTION 4 UNI/BI-DIRECTIONAL (UNI-BI)	b	b	b
OPTION 5 NARROWBAND COMPENSATION (NBS-C)	9999 ft.	FIELD ADJUST	FIELD ADJUST
OPTION 6 CWE WARNING TIME (CWEWT)	80 S	80	80
OPTION 7 LOSS OF SHUNT TIME (LOS)	16 S	16	16
OPTION 8 LOSS W/JOINTS NEAR ISLAND (I-LOS)	5 S	5	5
OPTION 9 BALLAST COMPENSATION (BC)	160	FIELD ADJUST	FIELD ADJUST
OPTION 10 PHASE COMPENSATION (P-COMP)	0 DEG.	FIELD ADJUST	FIELD ADJUST
	DEFAULT	OPTION 11 AX DRIVE #1	OPTION 12 AX DRIVE #2	OPTION 13 AX DRIVE #3
TRACK ASSIGNMENT (TK-ASN)	1 & 2			
OFFSET DISTANCE TRACK 1 (OF-TK1)	0 ft.			
OFFSET DISTANCE TRACK 2 (OF-TK2)	0 ft.			
WARNING TIME (WT)	99 S			
MOTION DETECT RESTART (MD-RST)	99%			
CONSTANT WARNING/MOTION (CW/MD)	d			
CLEAR JOINTS (CJ-LOS)	0 S			
POST JOINT DETECTION (PJ-DET)	15 S			
	DEFAULT	TRACK 1	TRACK 2
OPTION 17 MDR DRIVE OR AXR DRIVE (MDR-AX)	n	n	n
OPTION 17 SUB-MENU ADJUSTMENTS	DEFAULT	SETTING IF SELECTED	
OFFSET DISTANCE TRACK 1 (OF-TK1)	0 ft.		
OFFSET DISTANCE TRACK 2 (OF-TK2)	0 ft.		
CLEAR JOINT LOSS OF SHUNT (CJ-LOS)	0 S		
POST JOINT DETECTION (PJ-DET)	15 S		
	DEFAULT	TRACK 1	TRACK 2
OPTION 20 FALSE SHUNT DETECTION (FS-DET)	0 MIN.	0	0

DESIGN NOTE: ENSURE ALL SWITCHES ARE SET FOR PARTICULAR
DESIGN APPLICATION.

wk-026.32-04.dgn
29-NOV-2007

PROPOSED
DES. No. 07-0419
RED-IN YELLOW-OUT
AS INSTALLED
DATE _____
BY _____

DOT #689 681K

PROPOSED D	M	Y	REVISIONS	D	C	COMPLETED D	M	Y	C
			FIELD AS-BUILT	SHB		31	05	05	SSS
			NEW BORDER/TITLE BLOCK			15	10	07	SSH
16	10	07	NEW JOINTS PED XING	SSH	MGD				

REGION SOUTHERN
SUB. WAUKESHA
SIGNALS AND COMMUNICATIONS
DES. DKM
8 FEBRUARY 2001
CH. JCL
HXP-3R2 UNIT #1 LAYOUT
AND DISPLAY SELECTIONS
EUCLID ROAD
COOK, IL
W WK-026.32-04

STANDBY SYSTEM (UPPER BAY)

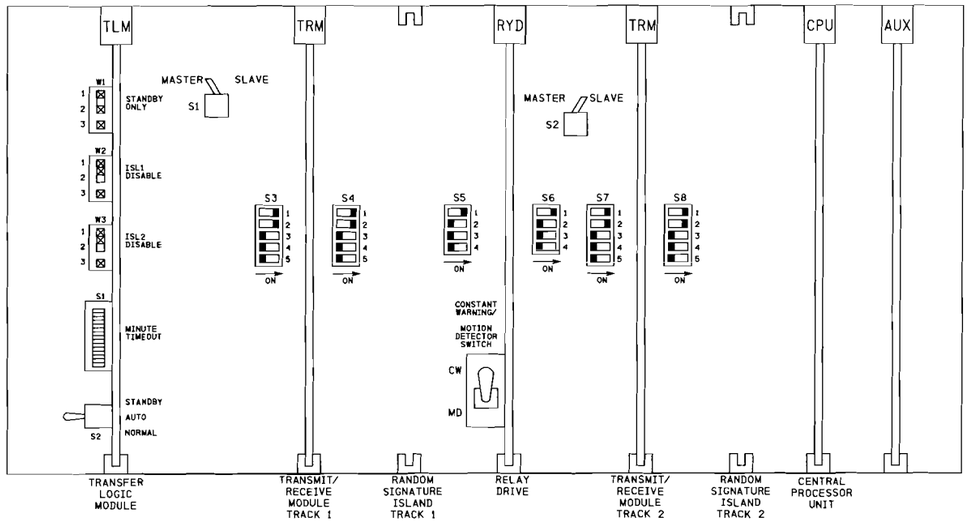

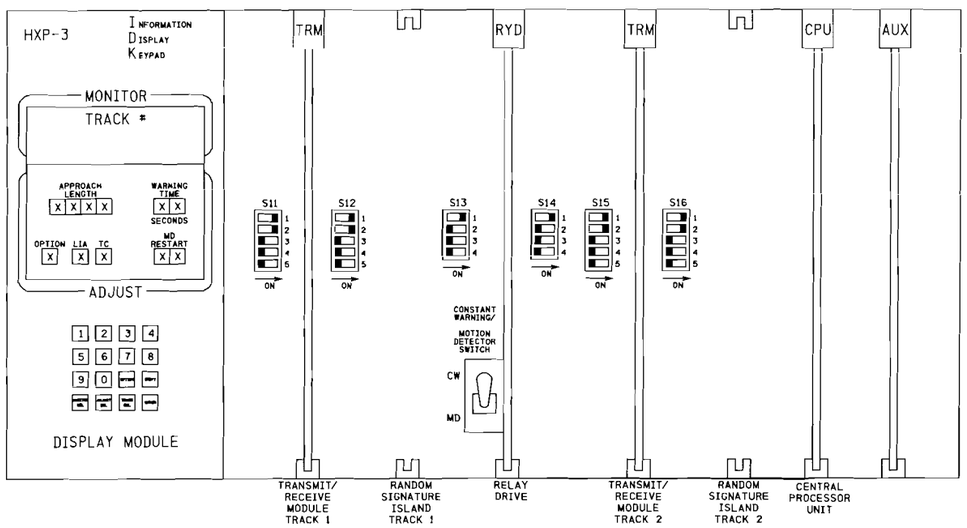

NOTE:
HCA-3 MODULE PLUGS INTO
THE HXP-3 RMM CARD SLOT.

HXP-3R2 SET-UP SHEET			
LOCATION			
OPTION 90 (CABINET #)			
		DEFAULT	TRACK 1	TRACK 2
APPROACH LENGTH		9999 ft.	2070 ft.	2070 ft.
WARNING TIME		99 S	36 sec.	36 sec.
LUMPED IMPEDANCE ADJUSTMENT (LIA)		0	FIELD ADJUST	FIELD ADJUST
TRANSMITTER CHECK (TC)		0	<470	<470
MOTION DETECT RESTART		99%	25 Rx	25 Rx
OPTION 1 TRACK ENABLE (TKENA)		UP	UP	UP
OPTION 2 TRACK FREQUENCY (TKFQ)		0 HZ	STRAP 430 151 HZ	STRAP 430 151 HZ
OPTION 3 CONSTANT WARNING/MOTION (CW/MD)		d	C	C
OPTION 4 UNI/BI-DIRECTIONAL (UNI-BI)		b	U	U
OPTION 5 NARROWBAND COMPENSATION (NBS-C)		9999 ft.	FIELD ADJUST	FIELD ADJUST
OPTION 6 CWE WARNING TIME (CWEWT)		80 S	80	80
OPTION 7 LOSS OF SHUNT TIME (LOS)		16 S	16	16
OPTION 8 LOSS W/JOINTS NEAR ISLAND (I-LOS)		5 S	5	5
OPTION 9 BALLAST COMPENSATION (BC)		160	FIELD ADJUST	FIELD ADJUST
OPTION 10 PHASE COMPENSATION (P-COMP)		0 DEG.	FIELD ADJUST	FIELD ADJUST
AX OPTIONS	DEFAULT	OPTION 11 AX DRIVE #1	OPTION 12 AX DRIVE #2	OPTION 13 AX DRIVE #3
TRACK ASSIGNMENT (TK-ASN)	1 & 2	1 & 2	1 & 2	
OFFSET DISTANCE TRACK 1 (OF-TK1)	0 ft.	4927 ft.	4578 ft.	
OFFSET DISTANCE TRACK 2 (OF-TK2)	0 ft.	4927 ft.	4578 ft.	
WARNING TIME (WT)	99 S	66 S	55 S	
MOTION DETECT RESTART (MD-RST)	99%	0%	0%	
CONSTANT WARNING/MOTION (CW/MD)	d	C	C	
CLEAR JOINTS (CJ-LOS)	0 S	0 S	0 S	
POST JOINT DETECTION (PJ-DET)	15 S	15 S	15 S	
		DEFAULT	TRACK 1	TRACK 2
OPTION 17 MDR DRIVE OR AXR DRIVE (MDR-AX)		n	A	A
OPTION 17 SUB-MENU ADJUSTMENTS		DEFAULT		SETTING IF SELECTED
OFFSET DISTANCE TRACK 1 (OF-TK1)		0 ft.		2102 ft.
OFFSET DISTANCE TRACK 2 (OF-TK2)		0 ft.		2102 ft.
CLEAR JOINT LOSS OF SHUNT (CJ-LOS)		0 S		10 S
POST JOINT DETECTION (PJ-DET)		15 S		15 S
		DEFAULT	TRACK 1	TRACK 2
OPTION 20 FALSE SHUNT DETECTION (FS-DET)		0 MIN.	0	0

CONFIRM WARNING TIME SELECTED

DESIGN NOTE: ENSURE ALL SWITCHES ARE SET FOR PARTICULAR DESIGN APPLICATION.

PROPOSED
DES. No. 07-0419
RED-IN YELLOW-OUT
AS INSTALLED
DATE _____
BY _____

DOT #689 681K

PROPOSED D	PROPOSED M	PROPOSED Y	REVISIONS	D	C	COMPLETED D	COMPLETED M	COMPLETED Y	C
			FIELD AS-BUILT	SHB		31	05	05	SSS
			NEW BORDER/TITLE BLOCK			15	10	07	SSH
16	10	07	NEW JOINTS PED XING	SSH	MGD				

REGION SOUTHERN
SUB. WAUKESHA
CN
SIGNALS AND COMMUNICATIONS
DES. DKM
8 FEBRUARY 2001
CH. JCL
HXP-3R2 UNIT #2 LAYOUT AND DISPLAY SELECTIONS
EUCLID ROAD
COOK, IL
W WK-026. 32-05

wk-026. 32-05. dgn
29-NOV-2007

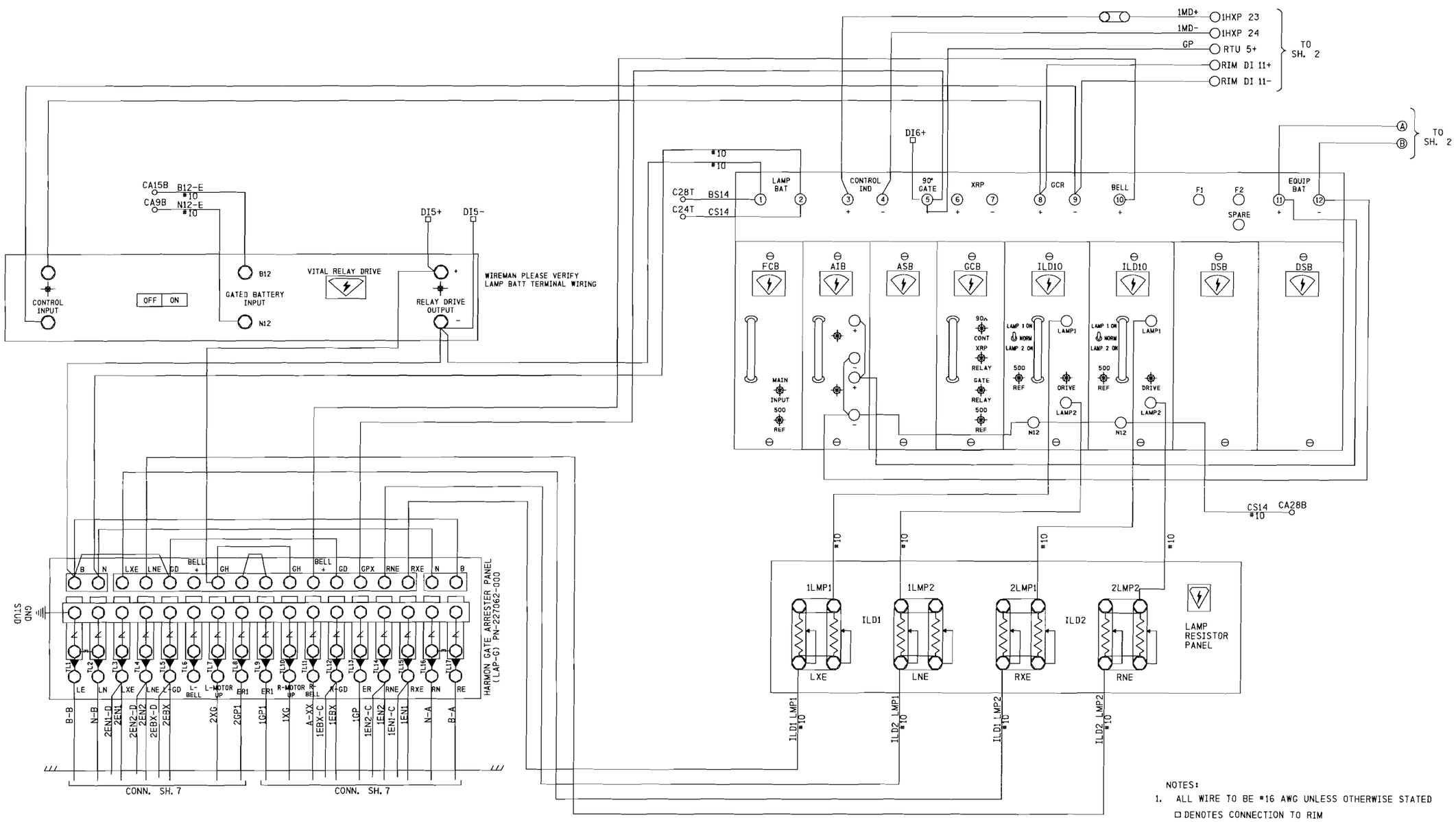

NOTES:

1. ALL WIRE TO BE #16 AWG UNLESS OTHERWISE STATED

□ DENOTES CONNECTION TO RIM

DOT #689 681K

PROPOSED D	PROPOSED M	PROPOSED Y	REVISIONS	D	C	COMPLETED D	COMPLETED M	COMPLETED Y	C
			FIELD AS-BUILT	SHB		31	05	05	SSS
			NEW BORDER/TITLE BLOCK			15	10	07	SSH
			PLAN REVISED			16	10	07	SSH

REGION SOUTHERN

SUB. WAUKESHA

SIGNALS AND COMMUNICATIONS

DES. DKM

30 JANUARY 2001

CH. JCL

CROSSING CONTROLLER CIRCUITS
EUCLID ROAD
COOK, IL

W WK-026.32-06

wk-026.32-06.dgn
29-NOV-2007

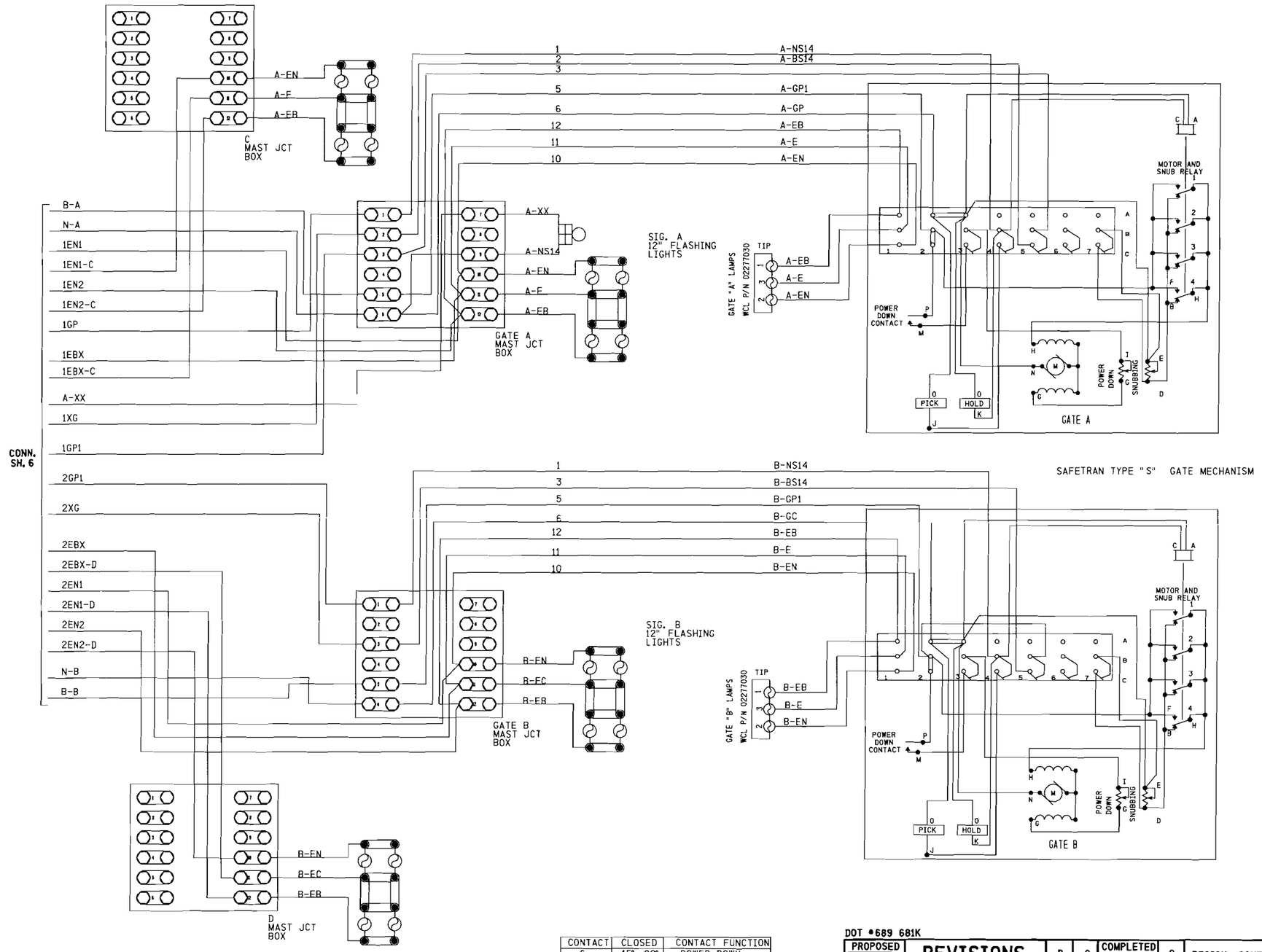

CONTACT	CLOSED	CONTACT FUNCTION
6	45° - 90°	POWER DOWN
7	0° - 89°	POWER UP
8	83° - 90°	FLASHING LIGHT
9	5° - 90°	BELL
10	0° - 5°	MOTOR SNUB

DOT #689 681K

PROPOSED D	PROPOSED M	PROPOSED Y	REVISIONS	D	C	COMPLETED D	COMPLETED M	COMPLETED Y	C
			FIELD AS-BUILT	SHB		31	05	05	SSS
			NEW BORDER/TITLE BLOCK			15	10	07	SSH
			PLAN REVISED			16	10	07	SSH

REGION SOUTHERN
SUB. WAUKESHA
CN
SIGNALS AND COMMUNICATIONS
DES. DKM
8 FEBRUARY 2001
CH. JCL
FLASHING LIGHT SIGNALS
WITH GATES AND CANTILEVERS
EUCLID ROAD
COOK, IL
W WK-026. 32-07

wk-026. 32-07. dgn
29-NOV-2007

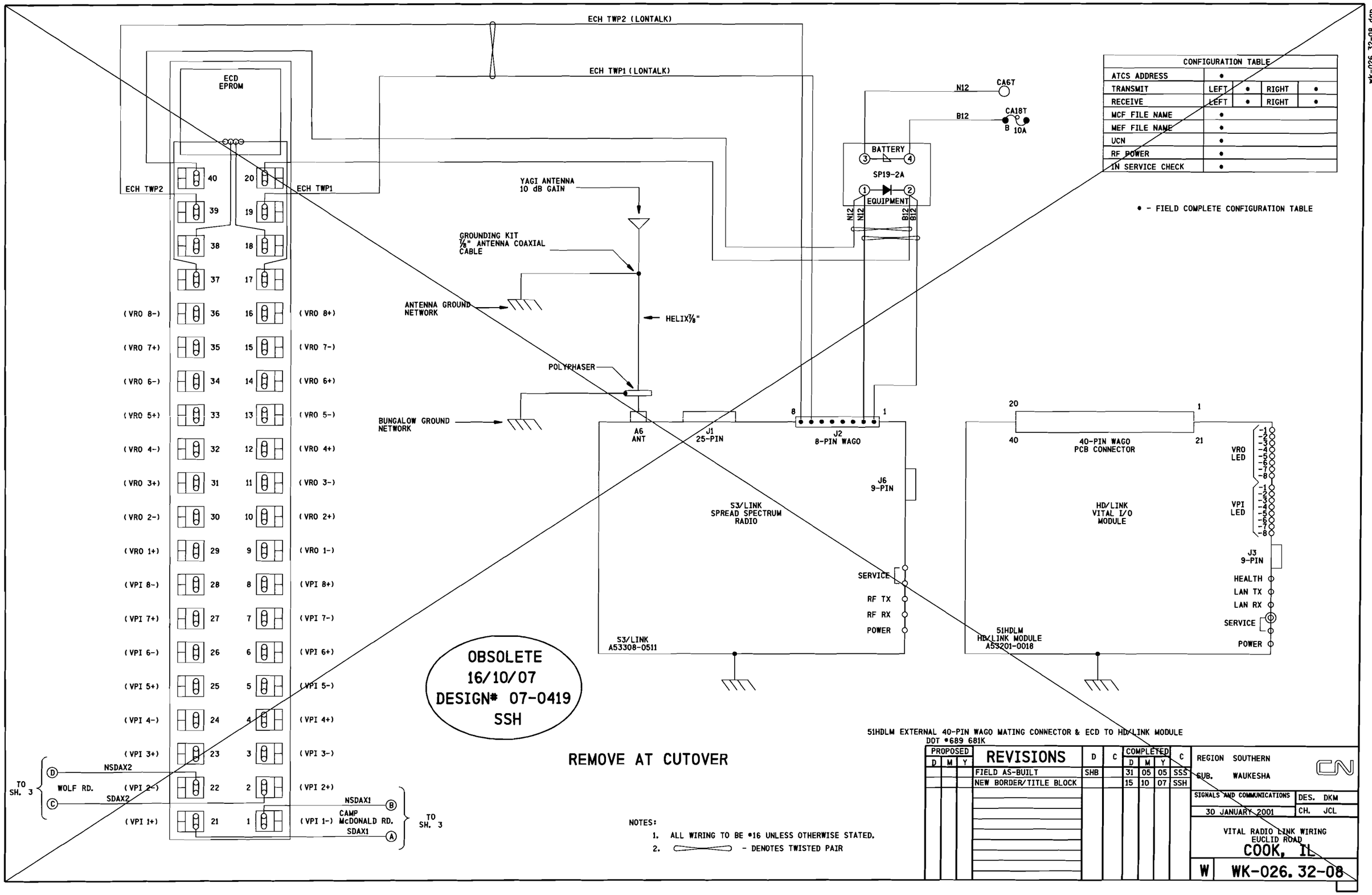

CONFIGURATION TABLE				
ATCS ADDRESS	•			
TRANSMIT	LEFT	•	RIGHT	•
RECEIVE	LEFT	•	RIGHT	•
MCF FILE NAME	•			
MEF FILE NAME	•			
UCN	•			
RF POWER	•			
IN SERVICE CHECK	•			

• - FIELD COMPLETE CONFIGURATION TABLE

PROPOSED D	PROPOSED M	PROPOSED Y	REVISIONS	D	C	COMPLETED D	COMPLETED M	COMPLETED Y	C
			FIELD AS-BUILT	SHB		31	05	05	SSS
			NEW BORDER/TITLE BLOCK			15	10	07	SSH

wk-026.32-09.dgn
29-NOV-2007

AC WIRING DIAGRAM

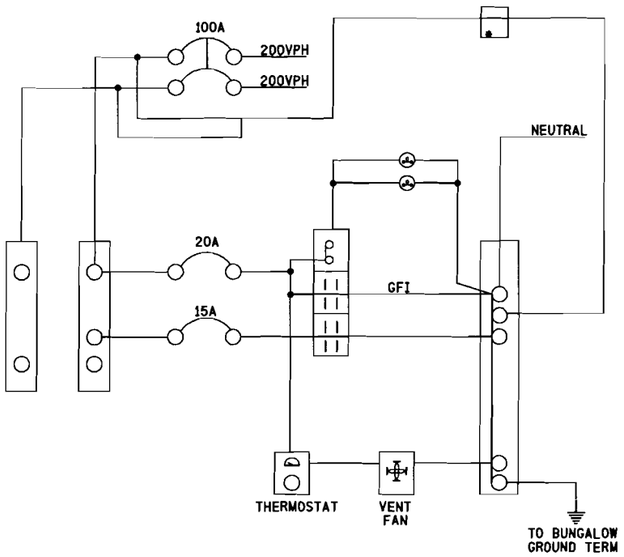

NOTE: 1. SUBCIRCUIT GROUND LUG TO BE LINKED TO NEUTRAL BUS INSIDE AC SWITCH BOX.
2. AC SWITCH BOX CASE TO BE BONDED TO BUNGALOW METAL FRAME.

* WIRING DIAGRAM

LIGHTING PROTECTION
GE 9L15 CCB *007
(MOUNT ON SIDE OF BREAKER BOX. CONNECT TO 60A LUGS

BS14/NS14 CIRCUITRY DIAGRAM

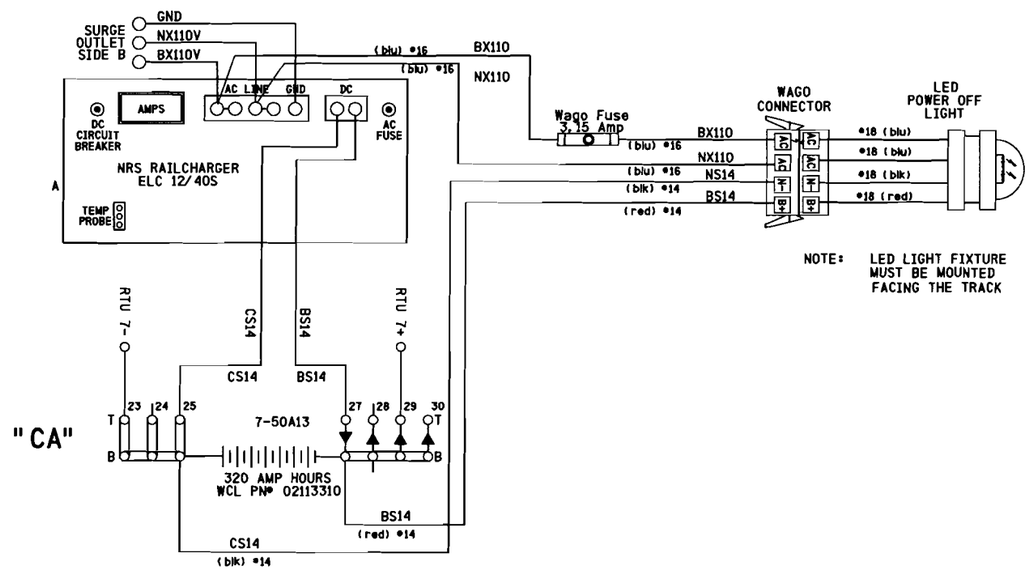

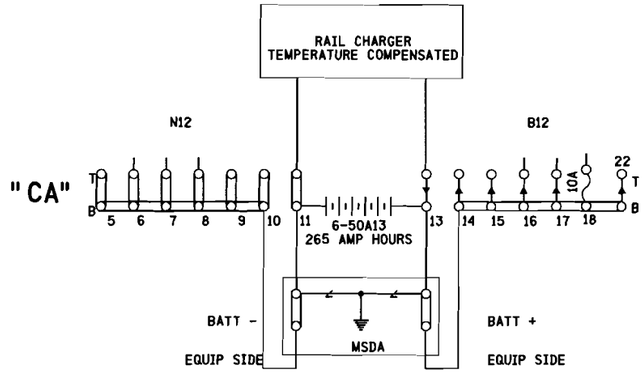

PROPOSED
DES. No. 07-0419
RED-IN YELLOW-OUT
AS INSTALLED
DATE _____
BY _____

DOT #689 681K

PROPOSED D	PROPOSED M	PROPOSED Y	REVISIONS	D	C	COMPLETED D	COMPLETED M	COMPLETED Y	C
			FIELD AS-BUILT	SHB		31	05	05	SSS
			NEW BORDER/TITLE BLOCK			15	10	07	SSH
16	10	07	NEW JOINTS PED XING	SSH	MGD				

REGION SOUTHERN
SUB. WAUKESHA
SIGNALS AND COMMUNICATIONS
30 JANUARY 2001
DES. DKM
CH. JCL
POWER DISTRIBUTION
EUCLID ROAD
COOK, IL
W WK-026.32-09

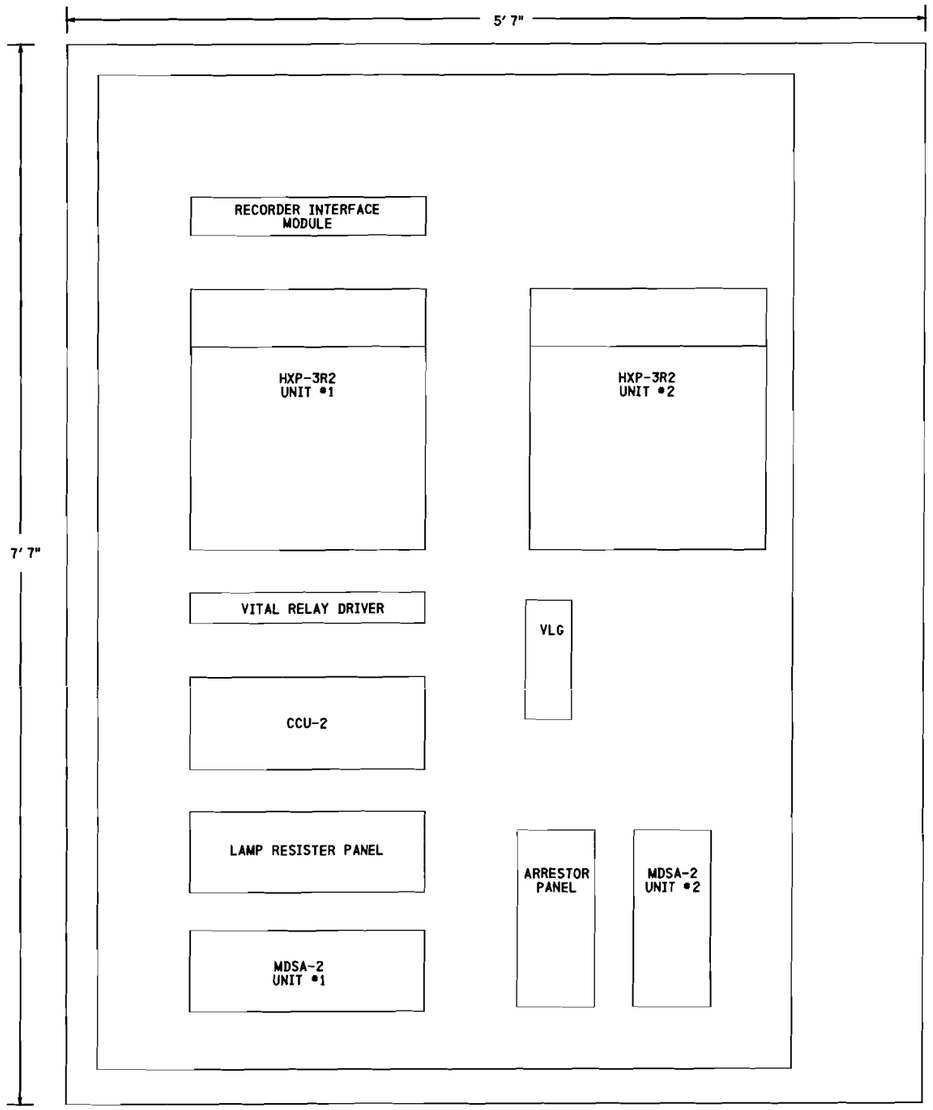

SIDE "B"

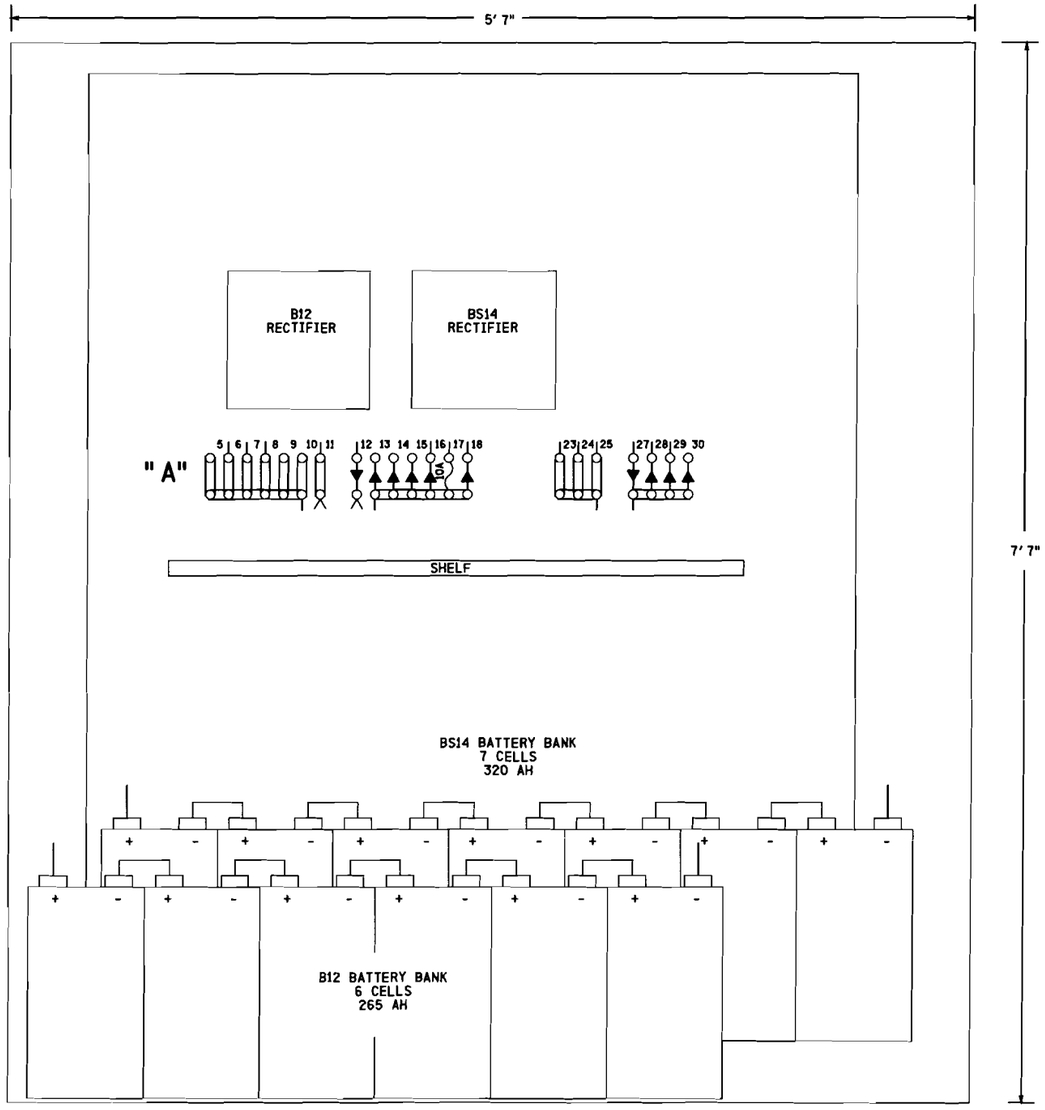

SIDE "C"

PROPOSED
DES. No. 07-0419
RED-IN YELLOW-OUT
AS INSTALLED
DATE
BY

DOT #689 681K

PROPOSED D	M	Y	REVISIONS	D	C	COMPLETED D	M	Y	C
			FIELD AS-BUILT	SHB		31	05	05	SSS
			NEW BORDER/TITLE BLOCK			15	10	07	SSH
16	10	07	NEW JOINTS PED XING	SSH	MGD				

REGION SOUTHERN
SUB. WAUKESHA
SIGNALS AND COMMUNICATIONS
DES. DKM
30 JANUARY 2001
CH. JCL

SIDE "B" & "C" LAYOUT
EUCLID ROAD
COOK, IL

W WK-026. 32-10

wk-026. 32-10. dgn
29-NOV-2007

wk-026. 32-11. dgn
29-NOV-2007

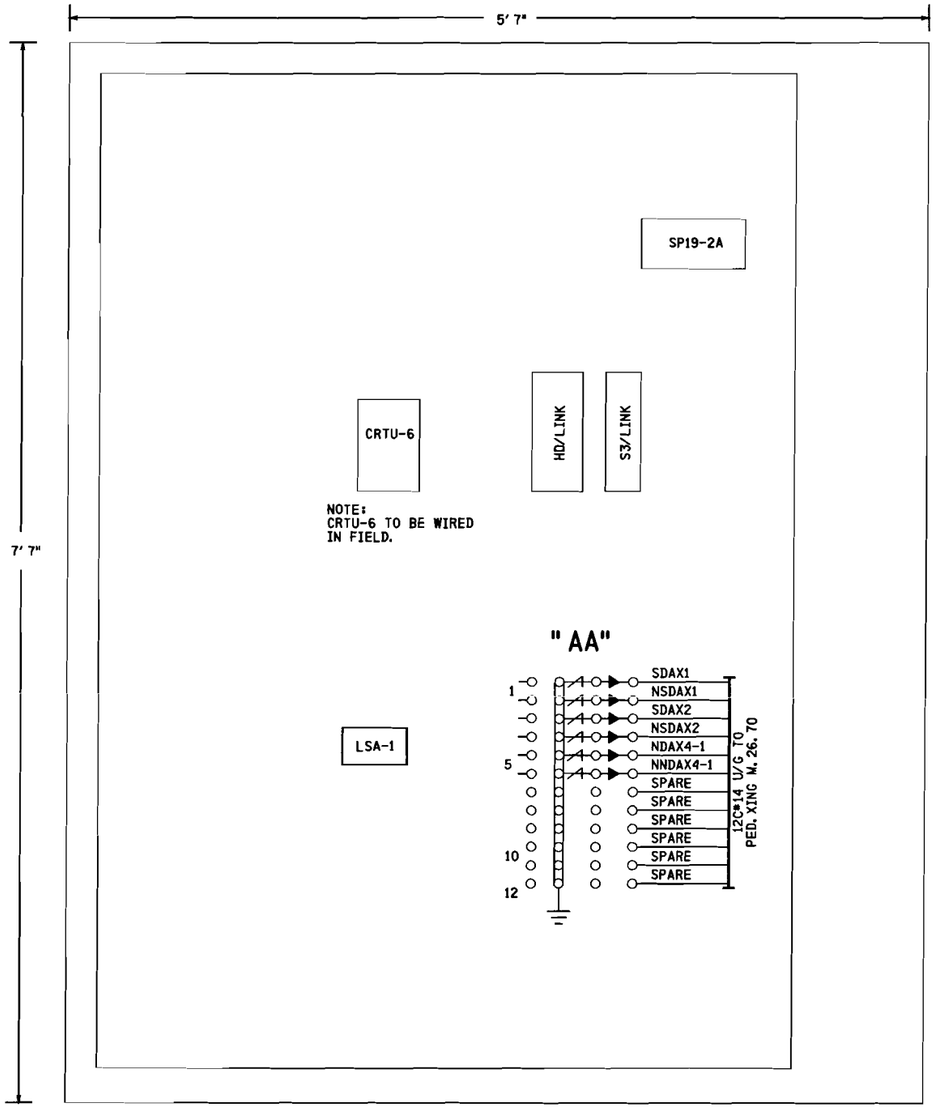

SIDE "A"

PROPOSED
DES. No. 07-0419
RED-IN YELLOW-OUT
AS INSTALLED
DATE _____
BY _____

DOT #689 681K

PROPOSED D	PROPOSED M	PROPOSED Y	REVISIONS	D	C	COMPLETED D	COMPLETED M	COMPLETED Y	C
			FIELD AS-BUILT	SHB		31	05	05	SSS
			NEW BORDER/TITLE BLOCK			15	10	07	SSH
16	10	07	NEW JOINTS PED XING	SSH	MGD				

REGION SOUTHERN
SUB. WAUKESHA
CN
SIGNALS AND COMMUNICATIONS
DES. DKM
30 JANUARY 2001
CH. JCL

SIDE "A" LAYOUT
EUCLID ROAD
COOK, IL

W WK-026. 32-11

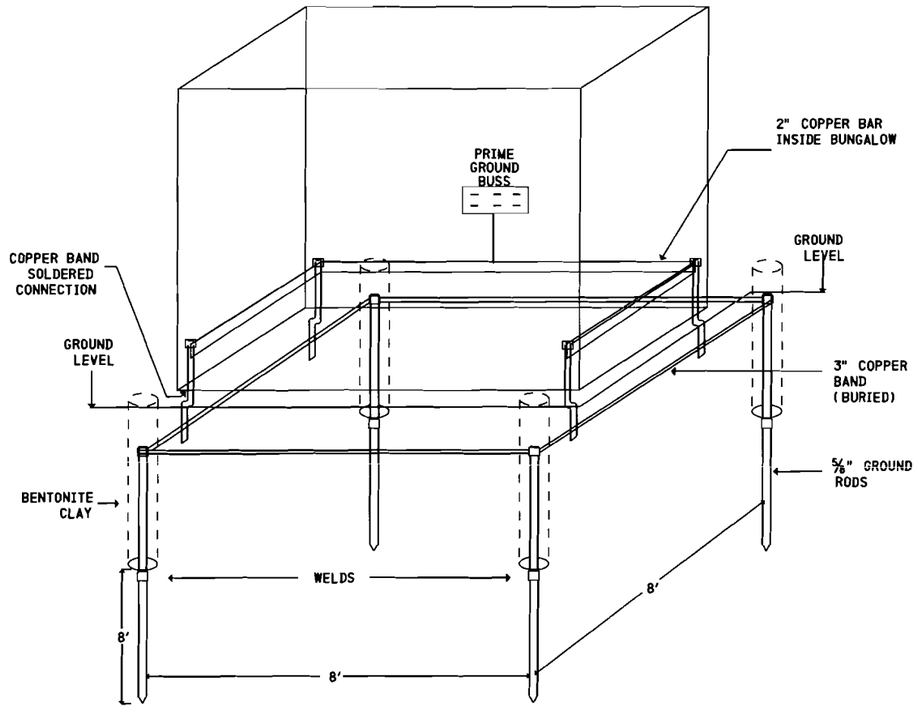

-NOTE-
ALL CONNECTIONS TO BE WELDED.

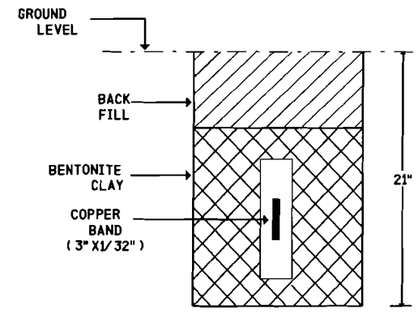

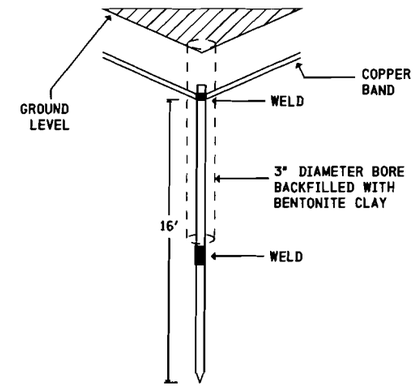

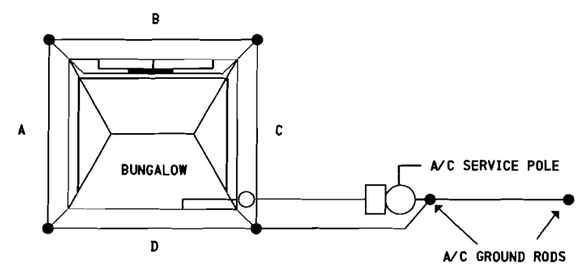

DOT #689 681K

PROPOSED D	PROPOSED M	PROPOSED Y	REVISIONS	D	C	COMPLETED D	COMPLETED M	COMPLETED Y	C
			FIELD AS-BUILT	SHB		31	05	05	SSS
			NEW BORDER/TITLE BLOCK			15	10	D7	SSH

REGION SOUTHERN
SUB. WAUKESHA
SIGNALS AND COMMUNICATIONS
30 JANUARY 2001
DES. DKM
CH. JCL

BUNGALOW GROUNDING
EUCLID ROAD
COOK, IL

W WK-026.32-12

wk-026.32-12.dgn
29-NOV-2007

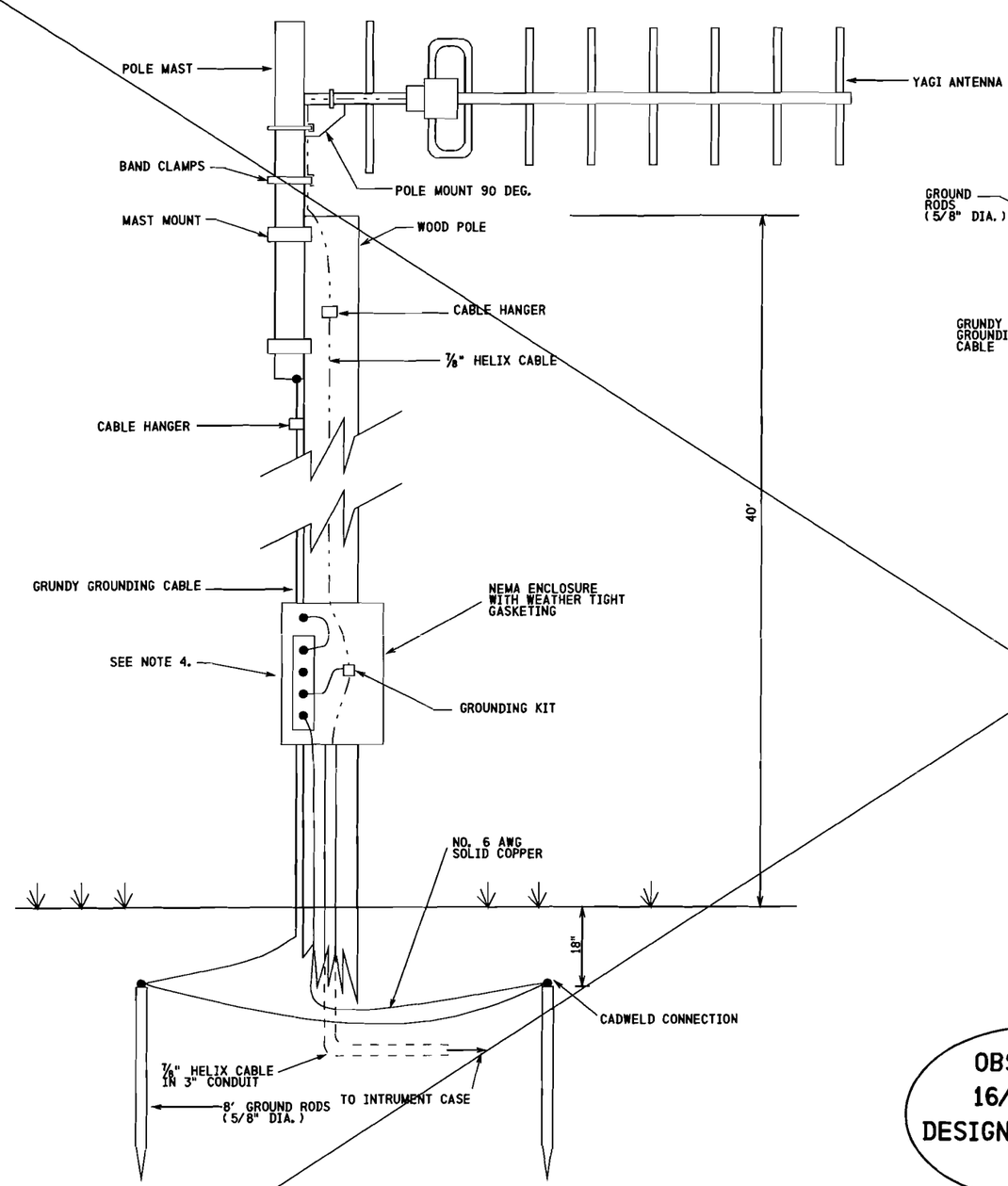

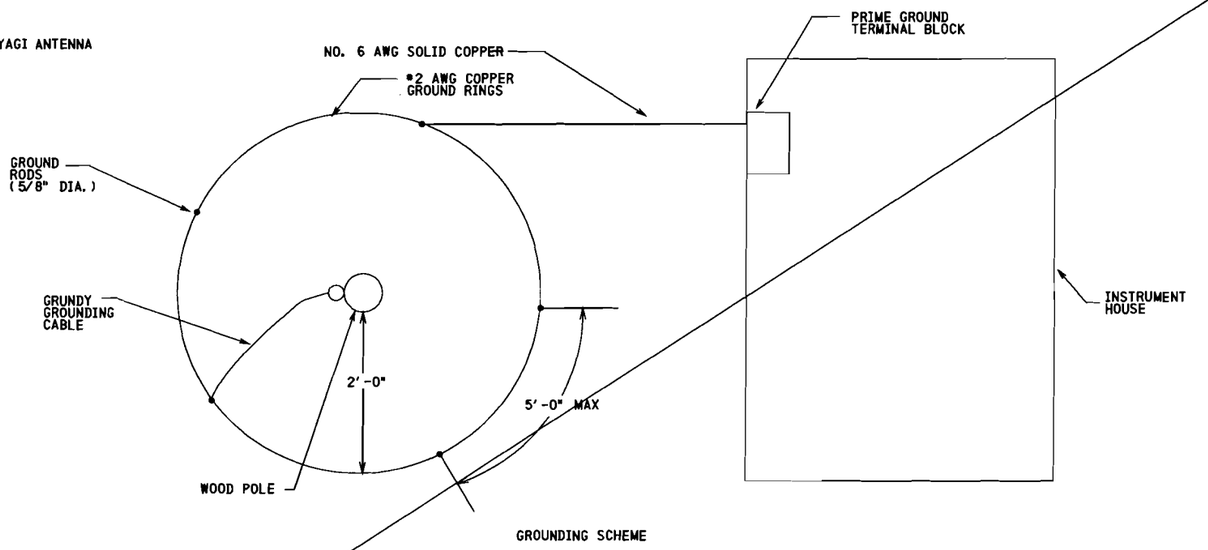

DESIGN NOTES:

1. THE LIGHTNING ROD AND ANTENNA SHALL BE APPROPRIATELY OFFSET, TO AVOID UNDESIRABLE COUPLING OR RADIATION LOSS, AND TO ACHIEVE THE REQUIRED RADIO COVERAGE AND SYSTEM RELIABILITY.
2. THE NEMA ENCLOSURE SHALL BE OF SUFFICIANT SIZE AND HOUSE CABLE, GROUND SYSTEM CONNECTION, AND LIGHTNING ARRESTORS.
3. THE WOOD POLE SHALL BE INSTALLED AT LEAST THIRTY (30) FEET AWAY FROM THE CENTER LINE OF THE RAILROAD TRACKS, AS PER THE REGULATIONS OF THE WISCONSIN CENTRAL RAILROAD.
4. NEMA ENCLOSURE TO HAVE SOLID COPPER BUS TO TERMINATE CABLE, SURGE PROTECTOR, ENCLOSURE, AND GROUND TOWER.
5. GROUND RESISTANCE OF 4 OHMS TO 15 OHMS FOR SITE BUNGALOW.
6. GROUND RESISTANCE OF 5 OHMS OR LESS FOR SITE TOWER.
7. WOOD POLE ANTENNA SUPPORT MAST TO HAVE GROUND CONDUCTOR BROUGHT DOWN FROM METAL ANTENNA MOUNTING POLE TO A GROUND ROD CONNECTED TO THE BUILDING GROUND.

OBSOLETE
16/10/07
DESIGN# 07-0419
SSH

DOT #689 681K

PROPOSED D	M	Y	REVISIONS	D	C	COMPLETED D	M	Y	C
			FIELD AS-BUILT	SHB		31	05	05	SSS
			NEW BORDER/TITLE BLOCK			15	10	07	SSH

REGION SOUTHERN
SUB. WAUKESHA
SIGNALS AND COMMUNICATIONS
DES. DKM
30 JANUARY 2001
CH. JCL

ANTENNA SITE DRAWING
EUCLID ROAD
COOK, IL

W WK-026.32-13

wk-026.32-13.dgn
29-NOV-2007

wk-026. 32-14. dgn
29-NOV-2007

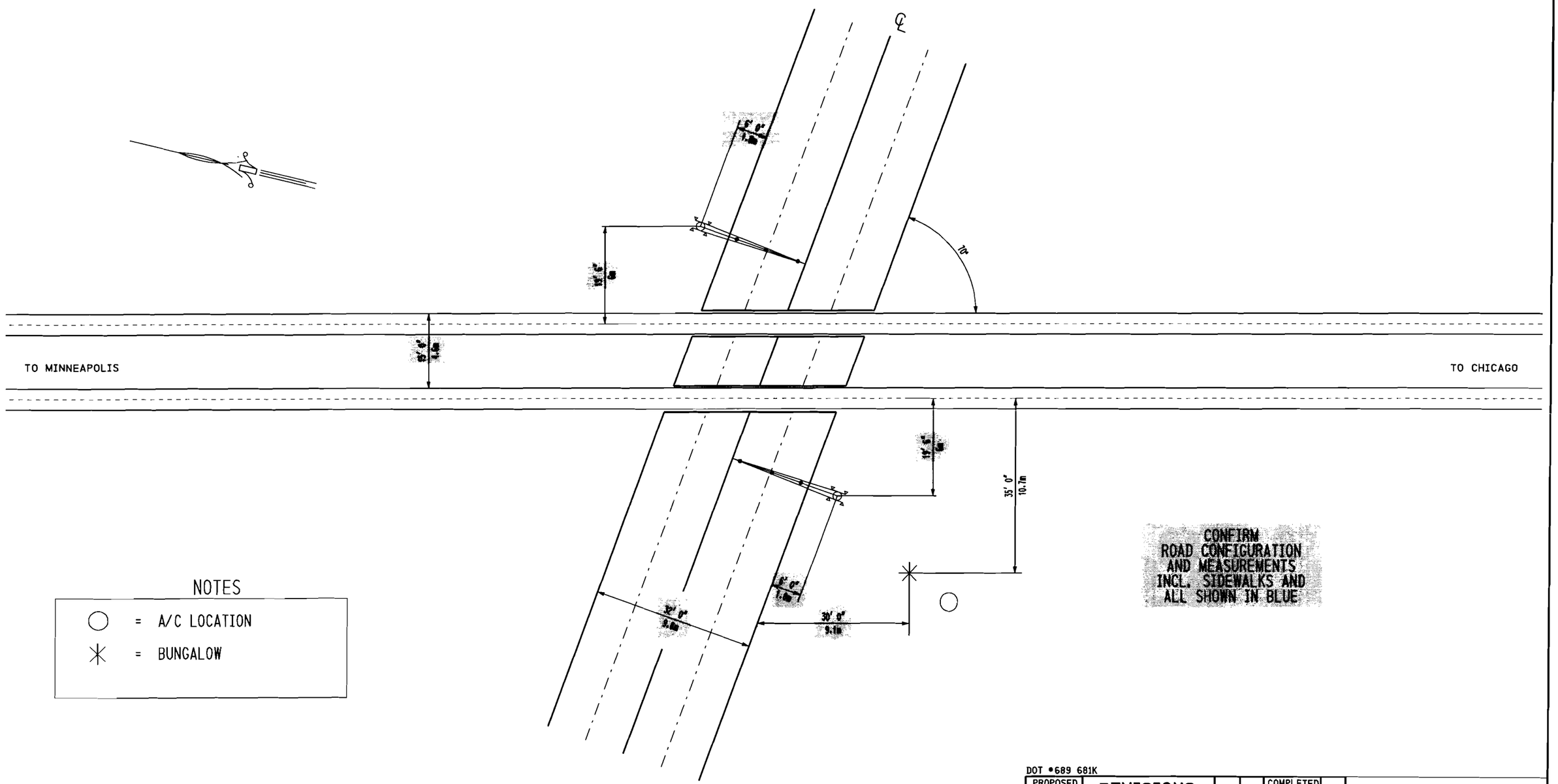

NOTES

○ = A/C LOCATION

✳ = BUNGALOW

DOT •689 681K

PROPOSED D	M	Y	REVISIONS	D	C	COMPLETED D	M	Y	C
			NEW BORDER/TITLE BLOCK			15	10	07	SSH

REGION SOUTHERN
SUB. WAUKESHA

SIGNALS AND COMMUNICATIONS

DES.
CH.

SITUATION SKETCH
SCALE 1" = 20'
EUCLID ROAD
COOK, IL

W WK-026. 32-14

14