SD 1010 - MP 185 TO 186

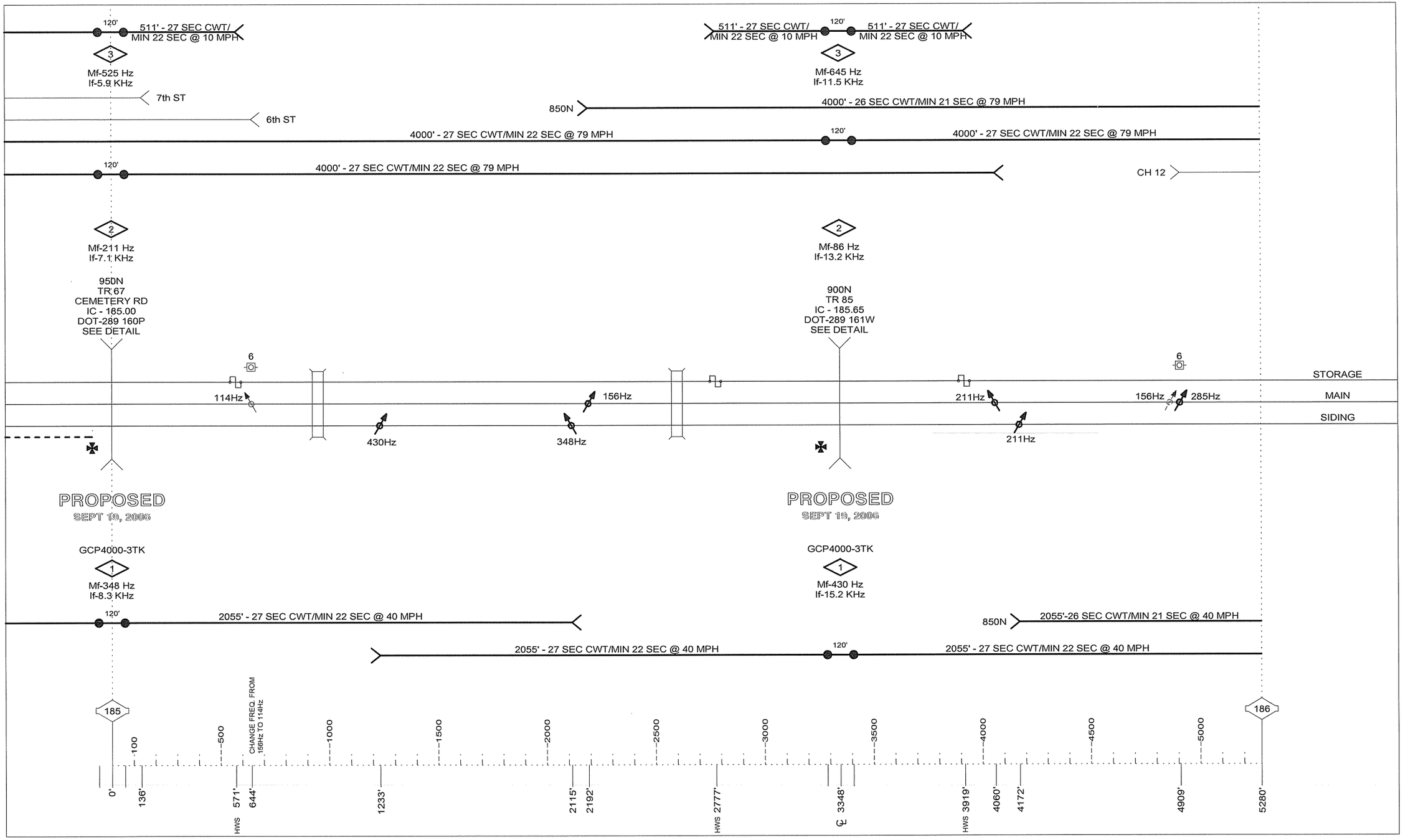

DRAWING SCALE 1" = 500'

5-5-99

SD 1010 - MP 186 TO 187

950N - 900N - 850N

4000'-26 SEC CWT/MIN 21 SEC @ 79 MPH — 120' — 4000'-26 SEC CWT/MIN 21 SEC @ 79 MPH
DAX"A" OFFSET = 2689'

4000'-27 SEC CWT/MIN 22 SEC @ 79 MPH — 900N — TR 385

4000' - 25 SEC CWT/MIN 20 SEC @ 79 MPH — 4000' - 25 SEC CWT/MIN 20 SEC @ 79 MPH
DAX"A" OFFSET = 338'

2055' - 25 SEC CWT/MIN 20 SEC @ 40 MPH
DAX"B" OFFSET = 338'

GCP4000-5TK

Mf-285Hz Mf-645Hz Mf-970Hz Mf-86Hz
If-10.0KHz

Mf-156 Hz
If-5.9 KHz

9123' 2379'

850N
TR 85A
IC - 186.16
DOT-289 162D
SEE DETAIL

GCP3000
Mf-156Hz

CH 12
(800N)
IC - 186.70
DOT-289 163K
SEE DETAIL

BP - 2L (N. NEOGA)
BL - 11,982'
BD - 12,094'

CTC HOUSE 12/14

STORAGE
MAIN
SIDING

AC/DC EPIC III EC-L 156Hz LS

430Hz 790Hz 86Hz 8C UGC 156Hz 970Hz 211Hz 970Hz 645Hz 156 Hz

2RA 2L 2RB XING HOUSE

645 Hz

BP - 1891
BL - 12,669'
BD - 12,077'

GCP3000
Mf-790Hz Mf-970Hz Mf-86Hz
If-10.0KHz

PROPOSED
SEPT 19, 2006

GCP4000-2TK
Mf-211 Hz
If-7.1 KHz

Mf-790Hz

SOUTH NEOGA

2055' - 26 SEC CWT/MIN 21 SEC @ 40 MPH — 120' — 2055' - 26 SEC CWT/MIN 21 SEC @ 40 MPH

900N

186 187

RELOCATE POWER TAP
REMOVE INS JTS, EC-L & TCU
INSTALL EPIC III
REMOVE 2-GCP3000-2TK
INSTALL GCP4000-5TK

100 500 1000 1500 2000 2500 3000 3500 4000 4500 5000

0' 183' 614' 807' 827' 912' 947' 1007' 1067' 1574' 2128' 3122' 3291' 3481' 3576' 3629' 3631' 3689' 3771' 5082' 5161' 5280'

DRL PS PT HSE PS PT

DRAWING SCALE 1" = 500'

7-18-06 5-5-99

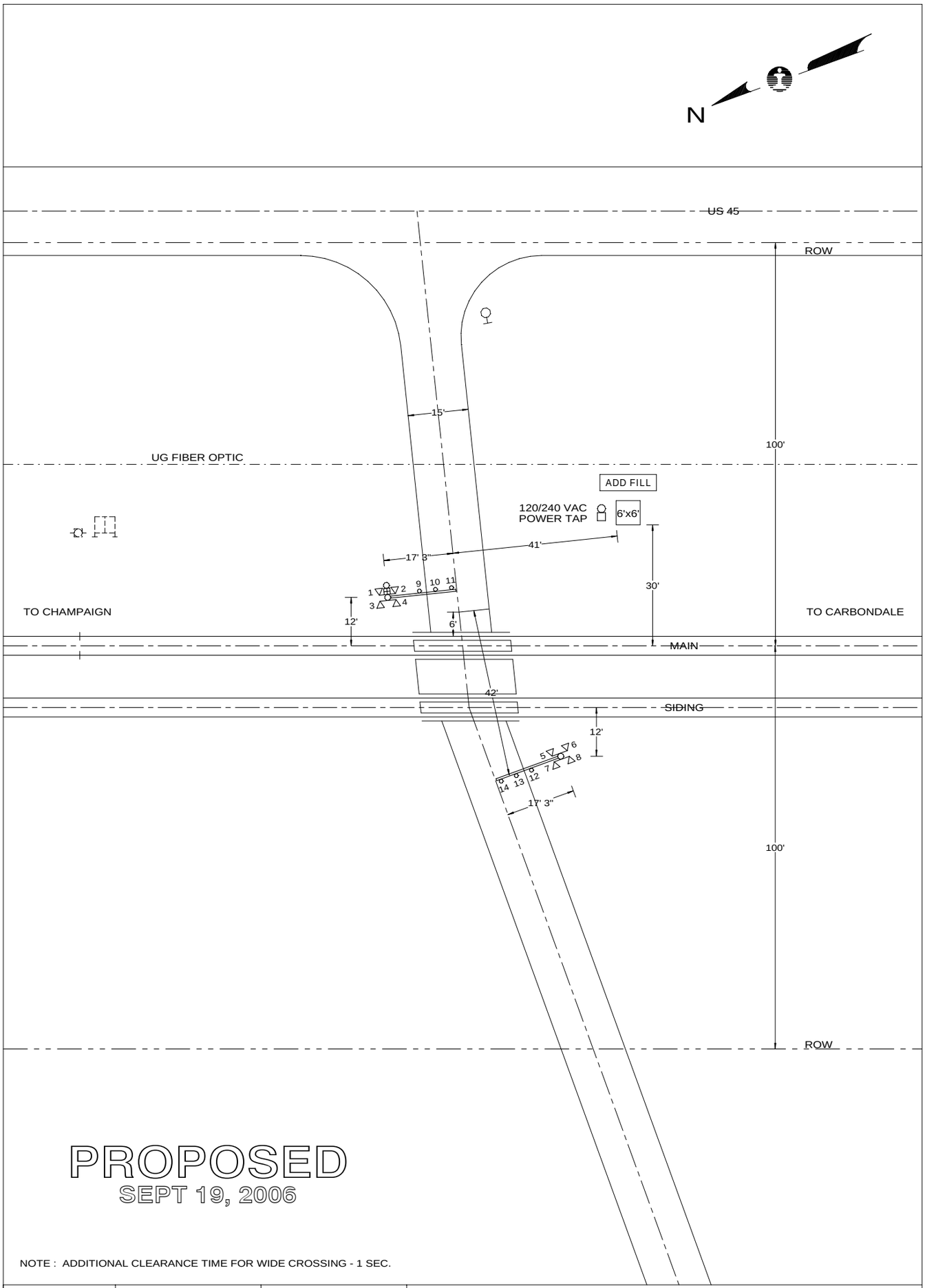

PROPOSED
SEPT 19, 2006

NOTE : ADDITIONAL CLEARANCE TIME FOR WIDE CROSSING - 1 SEC.

QUADRANT	NE	SW
STANDARD AFLS	LED	LED
CANTILEVER, FT.	-	-
GATE, FT.	17	17
ADDED LIGHTS	-	-
BARRICADE	-	-
MULTI-TK SIGN	-	-
BELL	X	-
REVISIONS		

E:\DWG\CHA\18616X.CAD

CN

SIGNALS & COMMUNICATIONS,
ENGINEERING DEPARTMENT

CITY & STATE: NEOGA, IL	SD 1010 X
CROSSING: 850N (TR 85A)	DATE: SEPT 19, 2006
IC - 186.16	DOT - 289 162D
MIDWEST DIVISION	CHAMPAIGN SUBDIVISION

IN SERVICE	SCALE	DRAWN BY
	1"=30'	AVS

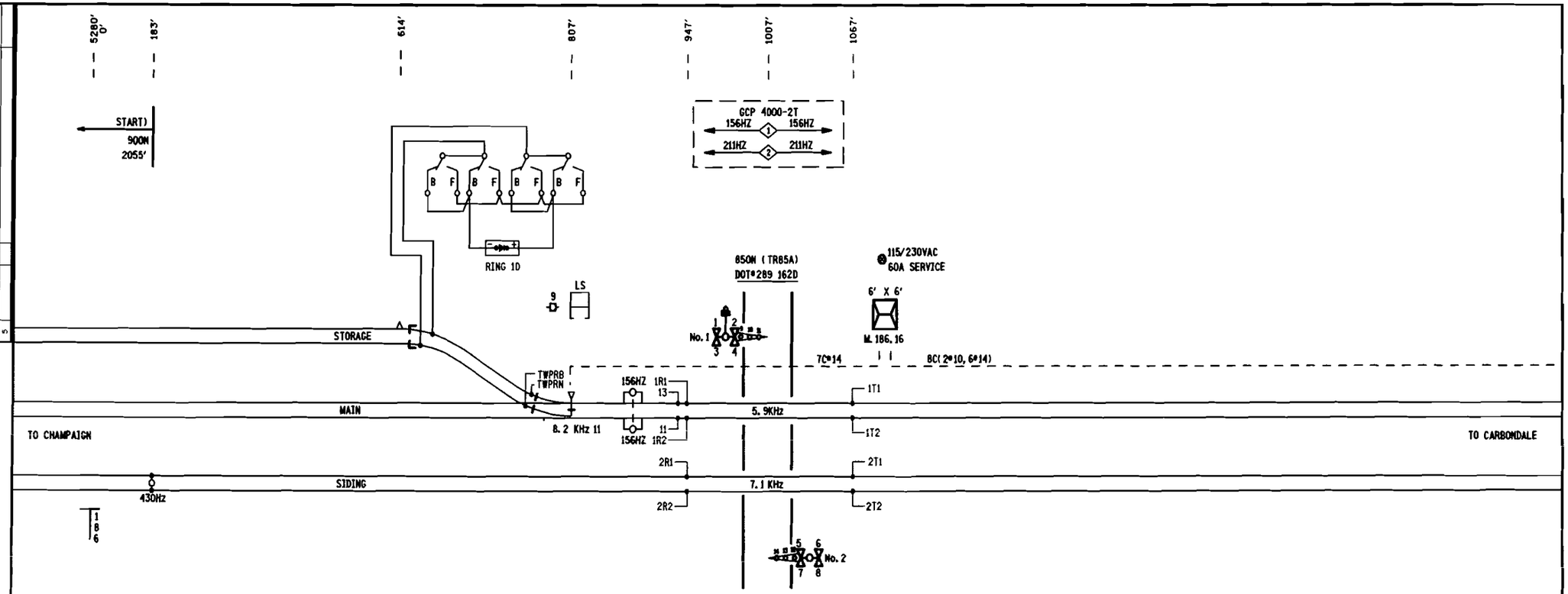

NOTE:

1) DENOTES MULTI-FREQ. NARROW BAND SHUNT 62775-3497

6' X 6' BUNGALOW

PROPOSED			REVISIONS	D	C	COMPLETED			C
D	M	Y				D	M	Y	

PROPOSED
DES. No. _____
RED-IN YELLOW-OUT

AS INSTALLED
DATE _____
BY _____

DIVISION MIDWEST
SUB. CHAMPAIGN
SD. 1010 C
MP. 186.00 TO 186.50

SIGNALS AND COMMUNICATIONS
EDMONTON, ALBERTA

DES. RLB
CH. RLC
20 JUNE 2007

TRACK LAYOUT

850N (TR 85A)
NEOGA, IL

M 18600C01

15

SAFETRAN SYSTEM CORP.
LOUISVILLE DIVISION, LOUISVILLE, KY

NO.	DATE	BY	DESCRIPTION	APP. BY
1				
2				
3				
4				
5				

REVISIONS

SAFETRAN SYSTEMS CORPORATION

DES. : RLB	DATE: 06/20/07	JOB NO. : PICA10120	
CKD. : RLC	ISSUE DATE: N/A	EST. NO. : N/A	
DRN. : RLB	PLAN NO. : N/A	SHEET N/A OF N/A	
P. TIME: 091.47	P. DATE: 31-JAN-2006	CAD ID. : 18600C01	

NO.	DATE	BY	DESCRIPTION	APP. BY
1				
2				
3				
4				
5				

REVISIONS

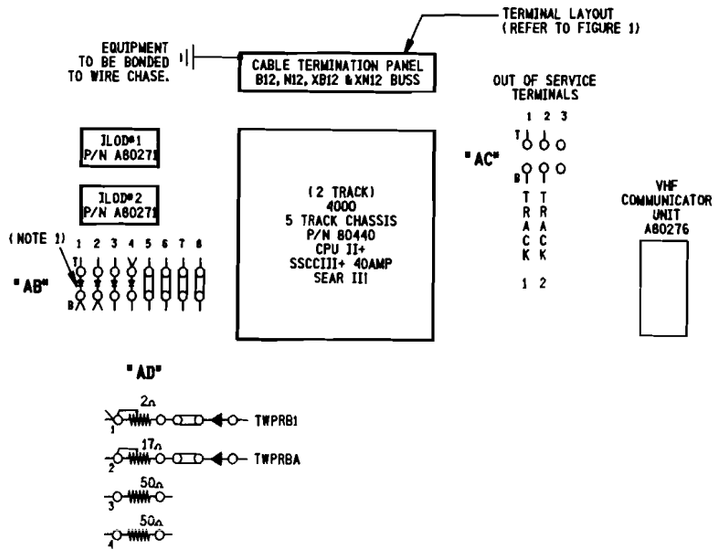

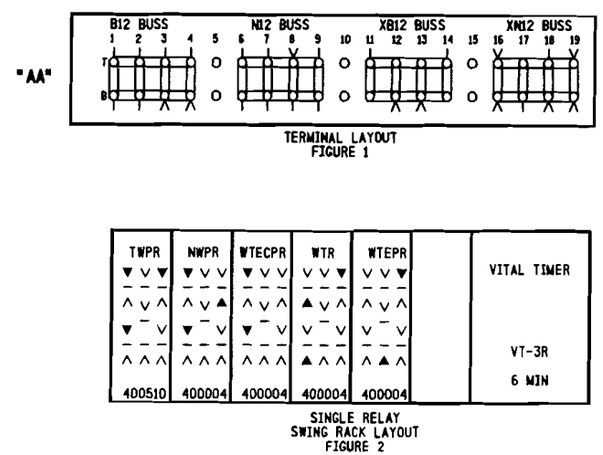

TERMINAL LAYOUT
FIGURE 1

SINGLE RELAY
SWING RACK LAYOUT
FIGURE 2

NOTE:
1) ⊸ DENOTES RECTIFIER : (SAFETRAN# 8008A299006)

SIDE "A"

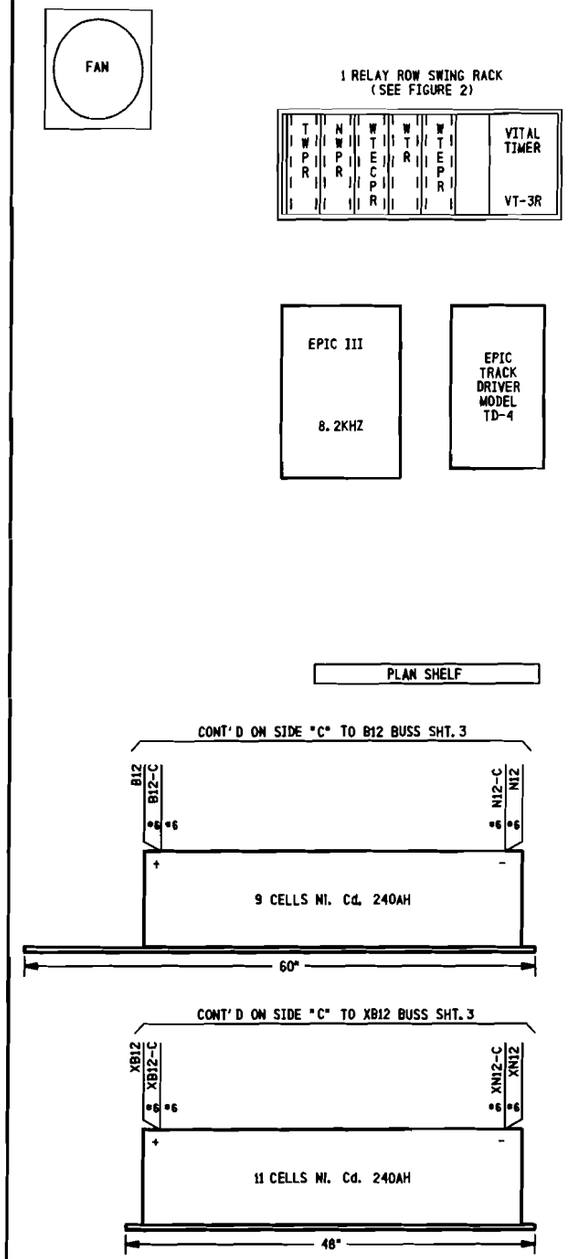

SIDE "B"

PROPOSED
DES. No. _____
RED-IN YELLOW-OUT

AS INSTALLED
DATE _____
BY _____

6' X 6' BUNGALOW

PROPOSED D	M	Y	REVISIONS	D	C	COMPLETED D	M	Y	C

DIVISION MIDWEST
SUB. CHAMPAIGN
SD. 1010 C
MP. 186.00 TO 186.50

SIGNALS AND COMMUNICATIONS
EDMONTON, ALBERTA
20 JUNE 2007

DES. RLB
CH. RLC

BUNGALOW LAYOUT
SIDE "A" & "B"
850N (TR 85A)
NEOGA, IL

M 18600C02

SAFETRAN SYSTEM CORP.
LOUISVILLE DIVISION, LOUISVILLE, KY

SAFETRAN SYSTEMS CORPORATION

DES. : RLB	DATE: 06/20/07	JOB NO. : PICA10120	
CKD. : RLC	ISSUE DATE: N/A	EST. NO. : N/A	
DRN. : RLB	PLAN NO. : N/A	SHEET N/A OF N/A	
P TIME: 07155	P DATE: 30-JAN-2008	CAD NO. : 18600C02	

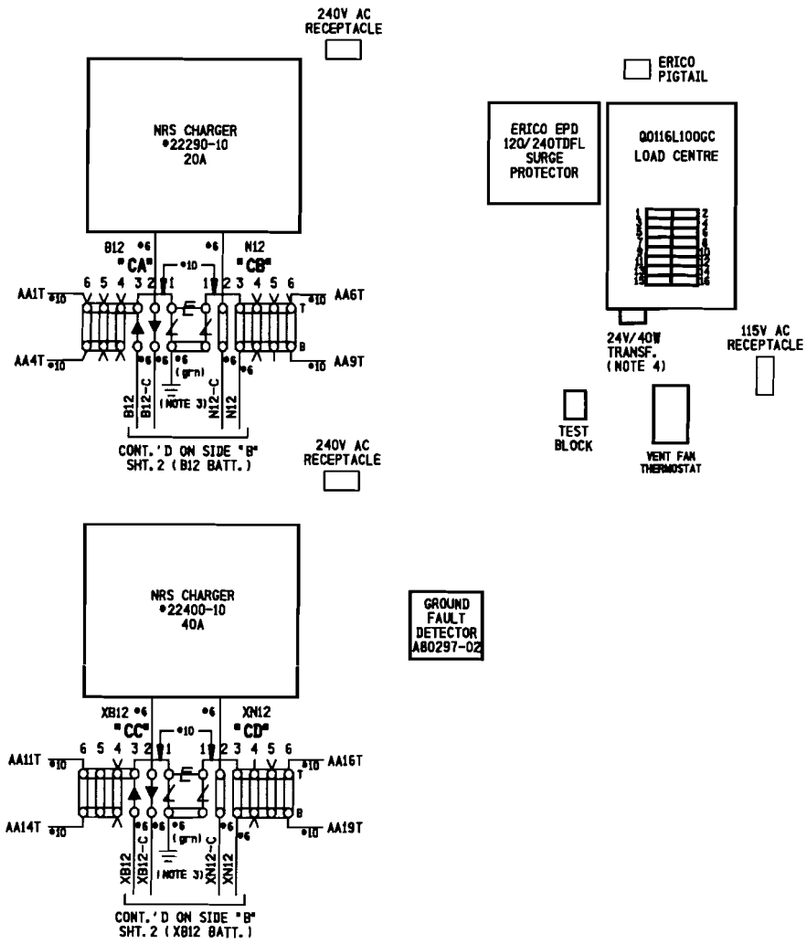

NOTES:

1) ⊄ DENOTES EQUALIZER TYPE: (SAFETRAN #022700-1X)
2) ⊼ DENOTES LIGHTNING ARRESTER TYPE: (SAFETRAN #022585-1X)
3) SURGE PROTECTION SHOULD BE BONDED TO BUNGALOW.
4) 24V-40W TRANSFORMER (CN STOCK #02-45-367)

SIDE "C"

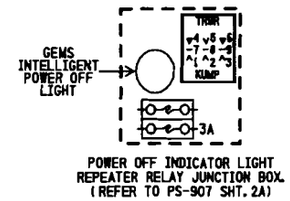

PROPOSED
DES. No. _____
RED-IN YELLOW-OUT
AS INSTALLED
DATE _____
BY _____

SIDE "D"
ABOVE ENTRY DOOR

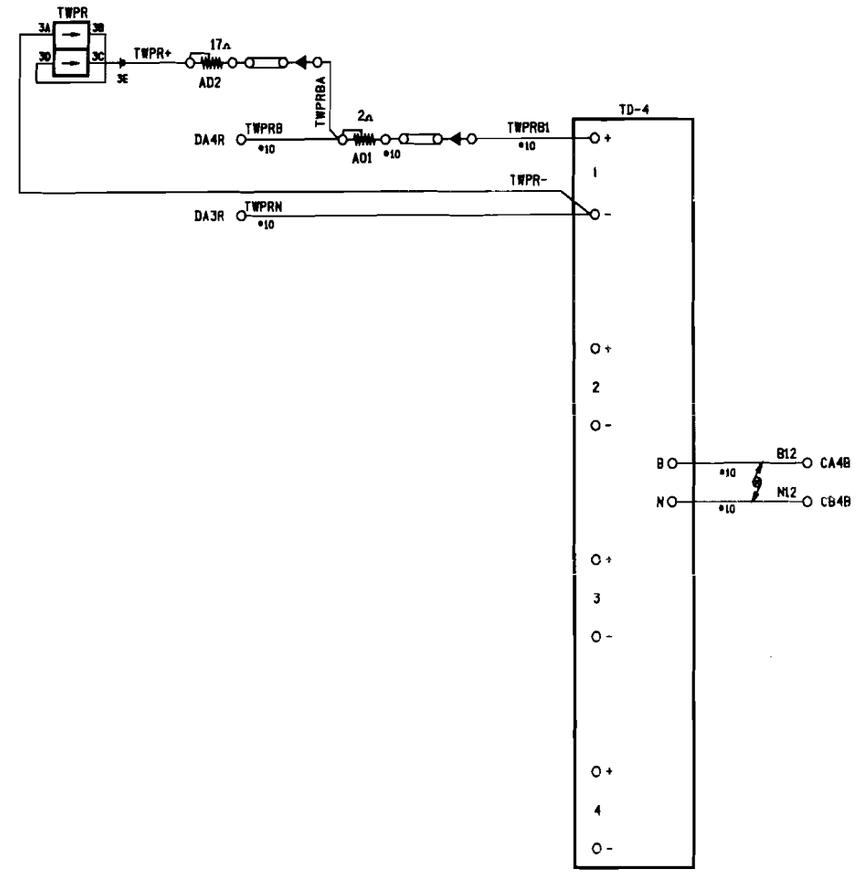

NOTE:
1) ALL WIRING #16 AWG UNLESS OTHERWISE NOTED.

6'X 6' BUNGALOW

PROPOSED D	M	Y	REVISIONS	D	C	COMPLETED D	M	Y	C

DIVISION MIDWEST
SUB. CHAMPAIGN
SD. 1010 C
MP. 186.00 TO 186.50

SIGNALS AND COMMUNICATIONS EDMONTON, ALBERTA
20 JUNE 2007

DES. RLB
CH. RLC

BUNGALOW LAYOUT
SIDE "C" & OVER DOOR SIDE "D"
850N (TR 85A)
NEOGA, IL

M 18600C03

SAFETRAN SYSTEM CORP.

NO.	DATE	BY	DESCRIPTION	APP. BY
1				
2				
3				
4				
5				

SAFETRAN SYSTEMS CORPORATION

DES.: RLB	DATE: 06/20/07	JOB NO.: PICA10120
CKD.: RLC	ISSUE DATE: N/A	EST. NO.: N/A
DRN.: RLB	PLAN NO.: N/A	SHEET N/A OF N/A
P TIME: 14:22	P DATE: 14-JAN-2008	CAD ID.: 18600C03

REVISIONS				
NO.	DATE	BY	DESCRIPTION	APP. BY
1				
2				
3				
4				
5				

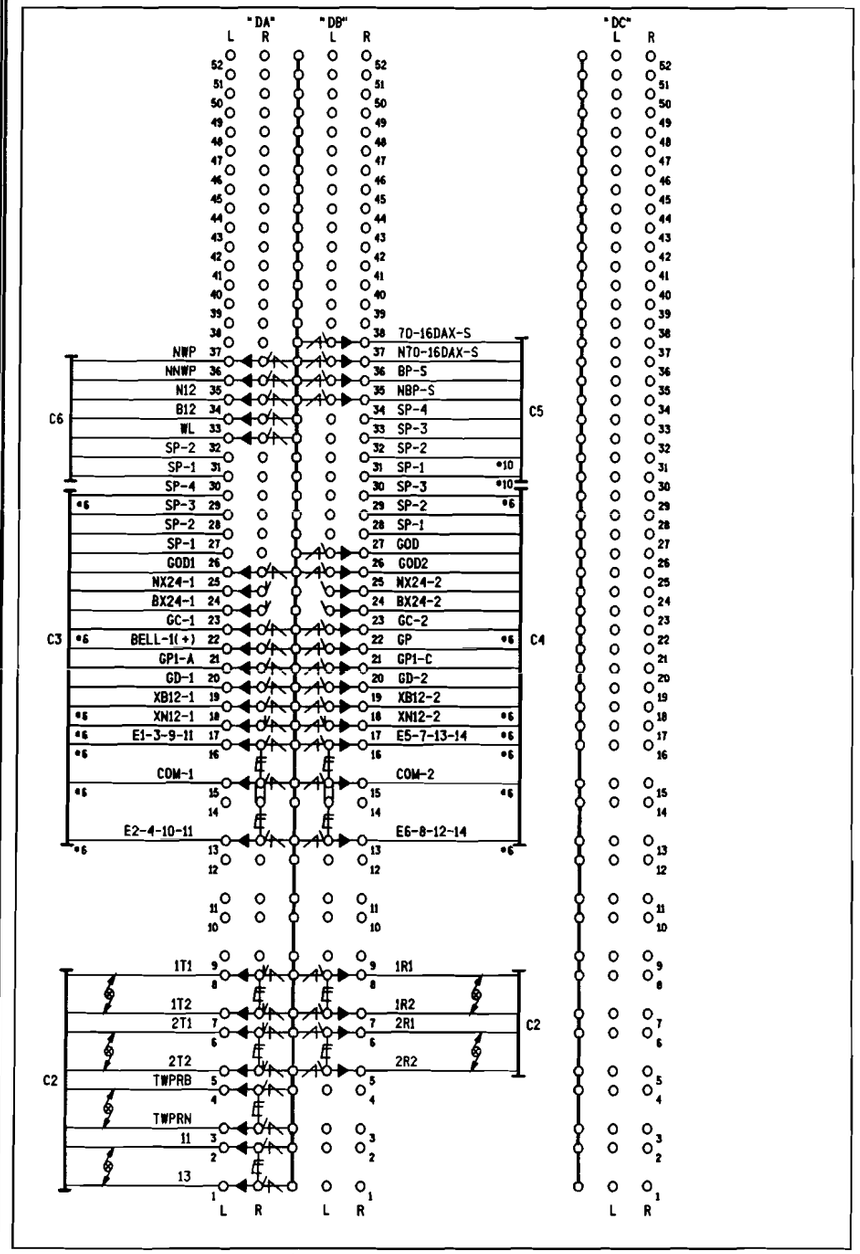

SIDE "D" (INSIDE)

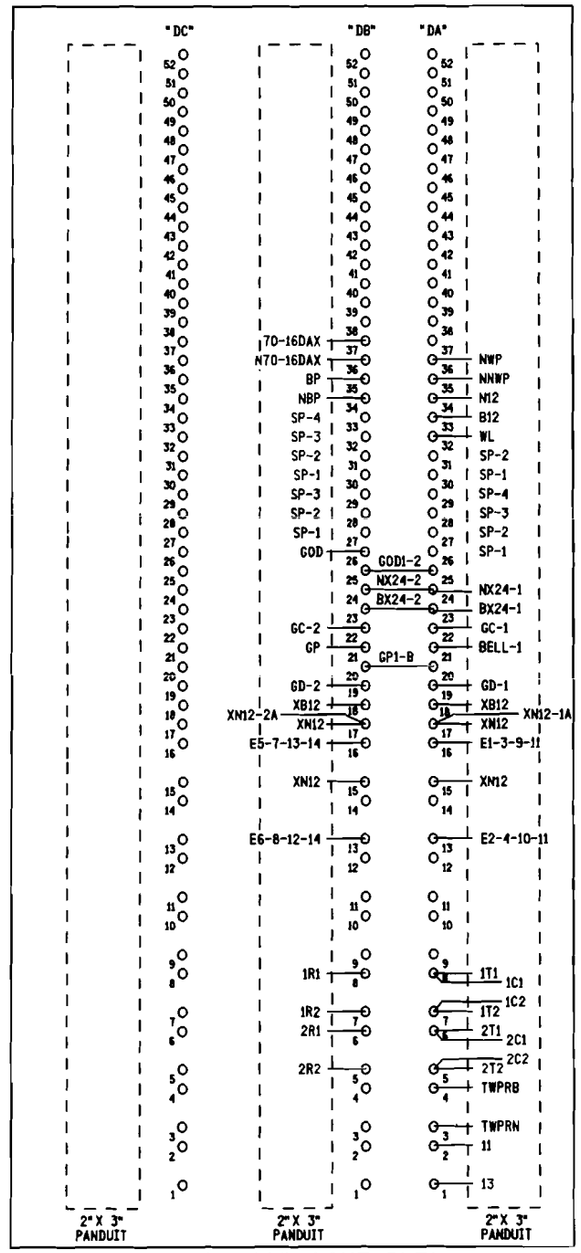

SIDE "D" (OUTSIDE)

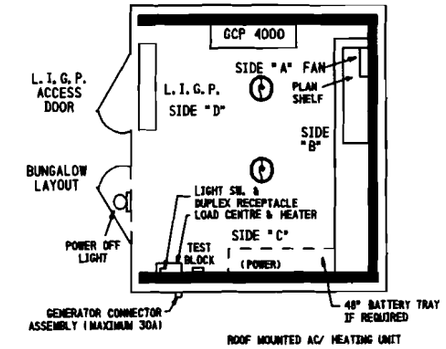

CABLE CONSIST:

C1-3C*6 TECK 90 U/G TO MAIN SERVICE
C2-(6)-2SC*6 TW. TO TRACK
C3-16C (7*6, 9*14) TO GATE (SIG. *1)
C4-16C (7*6, 9*14) TO GATE (SIG. *2)
C5-8C (2*10, 6*14) TO M.P. 186+34B1
C6-7C (7*14) TO ELECTRIC LOCK

NOTES:

1) DENOTES LIGHTNING ARRESTER TYPE: (SAFETRAN *022585-1X)
2) DENOTES EQUALIZER TYPE: (SAFETRAN *022700-1X)
3) DENOTES TWISTED PAIR.
4) ENSURE DOUBLE NUTTING OF ALL TERMINALS.

PROPOSED
DES. No. _____
RED-IN YELLOW-OUT
AS INSTALLED
DATE _____
BY _____

6' X 6' BUNGALOW

PROPOSED D	M	Y	REVISIONS	D	C	COMPLETED D	M	Y	C

DIVISION MIDWEST
SUB. CHAMPAIGN
SD. 1010 C
MP. 186.00 TO 186.50

SIGNALS AND COMMUNICATIONS
EDMONTON, ALBERTA
20 JUNE 2007

DES. RLB
CH. RLC

BUNGALOW LAYOUT SIDE "D"
LOW IMPEDANCE GROUND PLANE
850N (TR 85A)
NEOGA, IL

M 18600C04

SAFETRAN SYSTEM CORP.
LOUISVILLE DIVISION, LOUISVILLE, KY

SAFETRAN SYSTEMS CORPORATION

DES.: RLB	DATE: 06/20/07	JOB NO.: P1CA1012D	
CKD.: RLC	ISSUE DATE: N/A	EST. NO.: N/A	
DRN.: RLB	PLAN NO.: N/A	SHEET N/A OF N/A	
P. TIME: 07:55	P. DATE: 30-JAN-2008	CAD ID.: 18600C04	

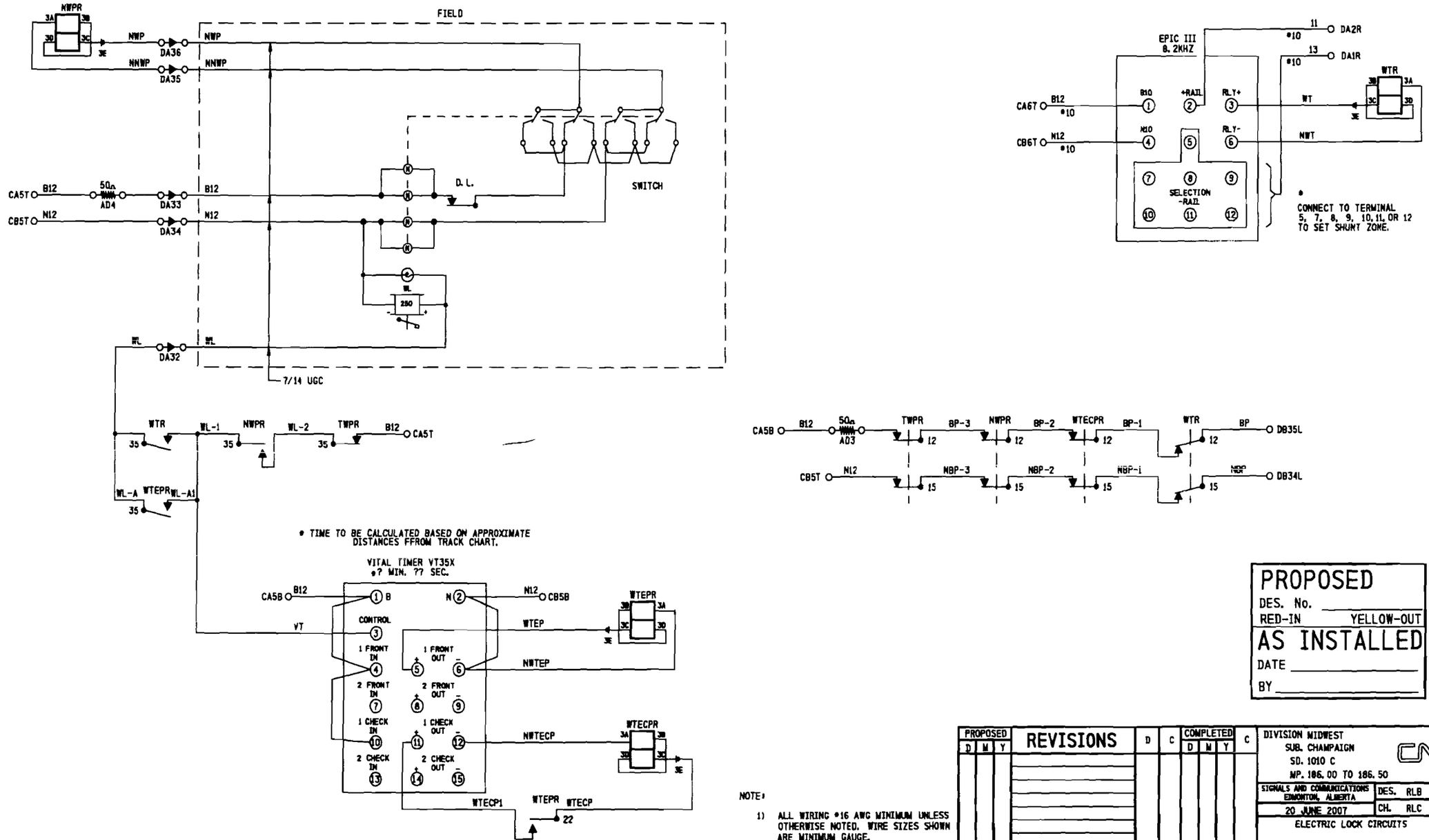

NOTE:

1) ALL WIRING #16 AWG MINIMUM UNLESS OTHERWISE NOTED. WIRE SIZES SHOWN ARE MINIMUM GAUGE.

PROPOSED
DES. No. _____
RED-IN YELLOW-OUT
AS INSTALLED
DATE _____
BY _____

PROPOSED D	M	Y	REVISIONS	D	C	COMPLETED D	M	Y	C

DIVISION MIDWEST
SUB. CHAMPAIGN
SD. 1010 C
MP. 186.00 TO 186.50

SIGNALS AND COMMUNICATIONS
EDMONTON, ALBERTA
20 JUNE 2007

DES. RLB
CH. RLC

ELECTRIC LOCK CIRCUITS
850N (TR 85A)
NEOGA, IL

M 18600C05

SAFETRAN SYSTEM CORP.

REVISIONS

NO.	DATE	BY	DESCRIPTION	APP. BY
1				
2				
3				
4				
5				

SAFETRAN SYSTEMS CORPORATION

DES. : RLB	DATE: 06/20/07	JOB NO. : PICA10120
CKD. : RLC	ISSUE DATE: N/A	EST. NO. : N/A
DWN. : RLB	PLAN NO. : N/A	SHEET N/A OF N/A
P TIME: 14:22	P DATE: 14-JAN-2008	CAD ID. : 18600C05

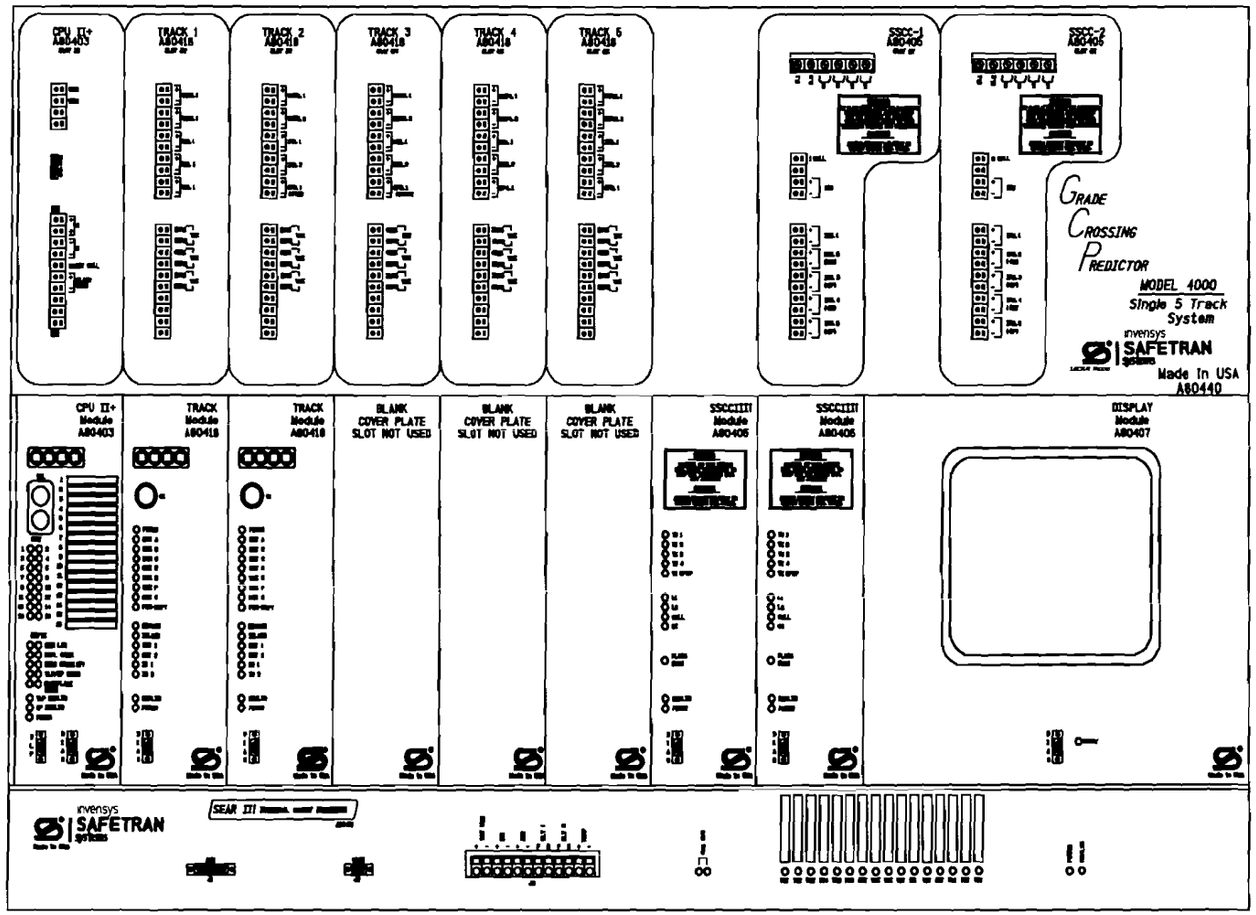

ATTENTION!

ENSURE THE DISPLAY MODULE HEATER IS DISABLED. LEAVING THE DISPLAY HEATER ENABLE WILL REDUCE THE AMOUNT OF BATTERY STANDBY TIME IN THE EVENT OF AN AC POWER FAILURE.

HEATER FUNCTION IS
JUMPER SELECTABLE ON
THE DISPLAY MODULE BOARD.
THREE OPTIONS ARE AVAILABLE.
NORMAL LCD HTR (DEFAULT)
HI CURRENT
NO JUMPER (HEATER DISABLED)

PROPOSED
DES. No. _____
RED-IN YELLOW-OUT
AS INSTALLED
DATE _____
BY _____

6' X 6' BUNGALOW

PROPOSED D	M	Y	REVISIONS	D	C	COMPLETED D	M	Y	C

DIVISION MIDWEST
SUB. CHAMPAIGN
SD. 1010 C
MP. 186.00 TO 186.50

SIGNALS AND COMMUNICATIONS
EDMONTON, ALBERTA
20 JUNE 2007

DES. RLB
CH. RLC

GCP 4000 NON REDUNDANT
5 TRK CHASSIS & MOD. LAYOUT
850N (TR 85A)
NEOGA, IL

M 18600C06

SAFETRAN SYSTEM CORP.
LOUISVILLE DIVISION, LOUISVILLE, KY

NO.	DATE	BY	DESCRIPTION	APP. BY
1				
2				
3				
4				
5				

REVISIONS

SAFETRAN SYSTEMS CORPORATION

DES. : RLB	DATE: 06/20/07	JOB NO. : PICA10120
CKD. : RLC	ISSUE DATE: N/A	EST. NO. : N/A
DRN. : RLB	PLAN NO. : N/A	SHEET N/A OF N/A
P TIME: 14:22	P DATE: 14-JAN-2008	CAD ID. : 18600C06

NO.	DATE	BY	REVISIONS DESCRIPTION	APP. BY
1				
2				
3				
4				
5				

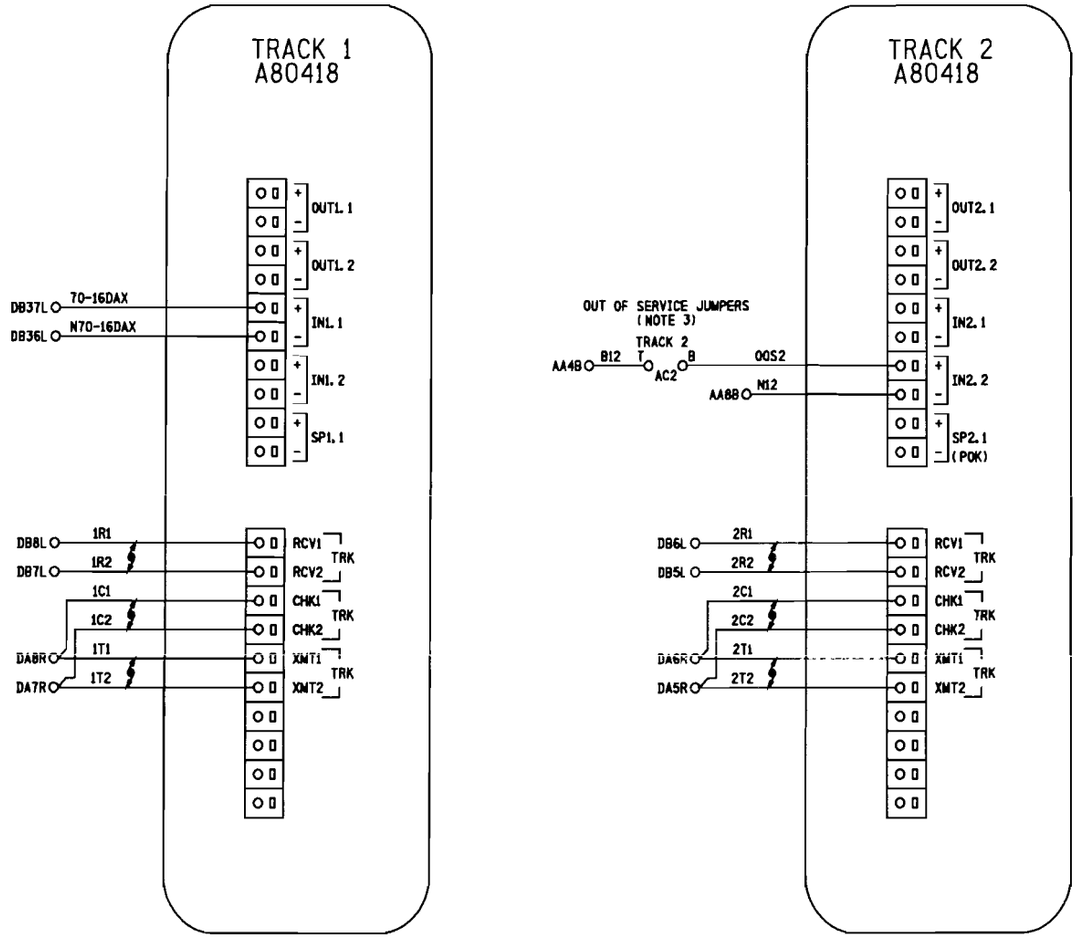

NOTES:

1) ALL WIRING #16 AWG MINIMUM UNLESS OTHERWISE NOTED. WIRE SIZES SHOWN ARE MINIMUM GAUGE.

2) TO TAKE TRACK 2 (T2) OUT OF SERVICE, JUMPER AC2T TO AC2B

DENOTES TWISTED PAIR.

PROPOSED
DES. No. _____
RED-IN YELLOW-OUT
AS INSTALLED
DATE _____
BY _____

6' X 6' BUNGALOW

PROPOSED D	M	Y	REVISIONS	D	C	COMPLETED D	M	Y	C

DIVISION MIDWEST
SUB. CHAMPAIGN
SD. 1010 C
MP. 186.00 TO 186.50

SIGNALS AND COMMUNICATIONS
EDMONTON, ALBERTA
20 JUNE 2007

DES. RLB
CH. RLC

GCP 4000 NON REDUNDANT
TRACK CONNECTIONS
850N (TR 85A)
NEOGA, IL

M 18600C07

SAFETRAN SYSTEM CORP.

SAFETRAN SYSTEMS CORPORATION

DES. : RLB	DATE: 06/20/07	JOB NO. : PTCA10120	
CKD. : RLC	ISSUE DATE: N/A	EST. NO. :N/A	
DWN. : RLB	PLAN NO. :N/A	SHEET N/A OF N/A	
P TIME:14:22	P DATE: 14-JAN-2008	CAD ID. : 18600C07	

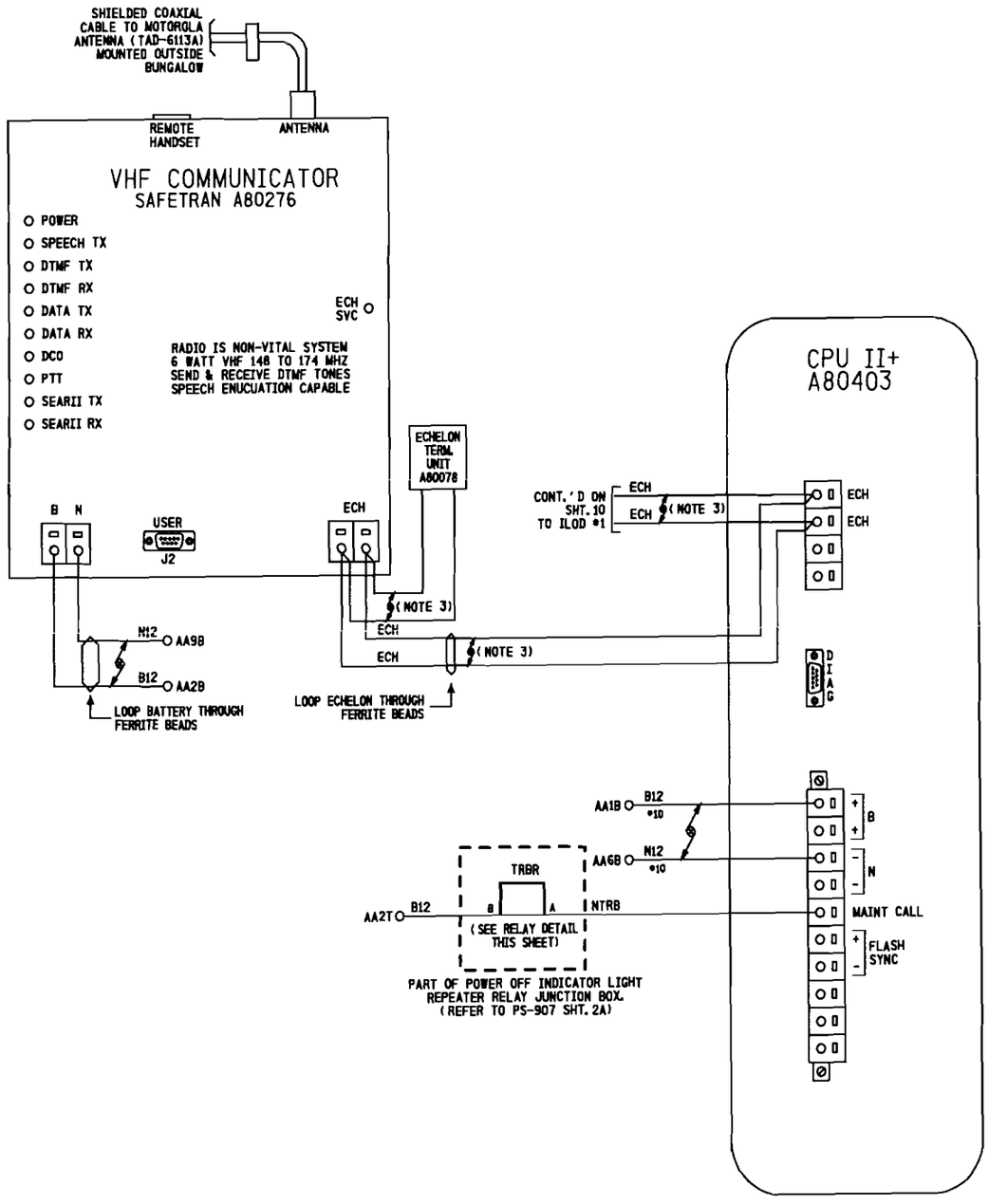

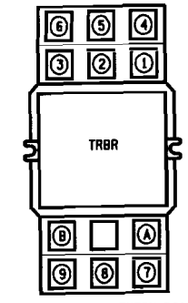

RELAY DETAIL

RELAY - POTTER & BRUMFIELD
MODEL KUMP-14D18-12 SOCKET MOUNTABLE
12 VDC W/ 3 FORM C CONTACTS.

SOCKET - SCREW TERMINAL
MODEL 27E121.

RELAY WIRING DIAGRAM (REAR VIEW)

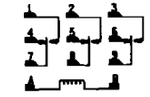

NOTE:
SOCKET NUMBERING CORRESPONDS DIRECTLY WITH RELAY NUMBERING.
(COIL SHOWN ENERGIZED)

NOTES:

1) ALL WIRING #16 AWG UNLESS OTHERWISE NOTED.
2) DENOTES TWISTED PAIR.
3) USE BELDEN CABLE, PART #8461-u500-60 FOR ALL ECHELON AND LAN WIRING.

PROPOSED
DES. No. _____
RED-IN YELLOW-OUT
AS INSTALLED
DATE _____
BY _____

6' X 6' BUNGALOW

PROPOSED D	M	Y	REVISIONS	D	C	COMPLETED D	M	Y	C

DIVISION MIDWEST
SUB. CHAMPAIGN
SD. 1010 C
MP. 186.00 TO 186.50

SIGNALS AND COMMUNICATIONS EDMONTON, ALBERTA
20 JUNE 2007
DES. RLB
CH. RLC

SAFETRAN INTERNAL EVENT ANALYZER
CPUII+ & VHF COMMUNICATOR
850N (TR 85A)
NEOGA, IL

M 18600C08

SAFETRAN SYSTEM CORP.

NO.	DATE	BY	DESCRIPTION	APP. BY
1				
2				
3				
4				
5				

REVISIONS

SAFETRAN SYSTEMS CORPORATION

DRN. : RLB	DATE: 06/20/07	JOB NO. : P2CA10120	
CKD. : RLC	ISSUE DATE: N/A	SHT. NO. :	
DWN. : RLB	PLAN NO. IN/A	SHEET N/A OF N/A	
P TIME: 14:22	P DATE: 14-JAN-2008	CAD ID. : 18600C08	

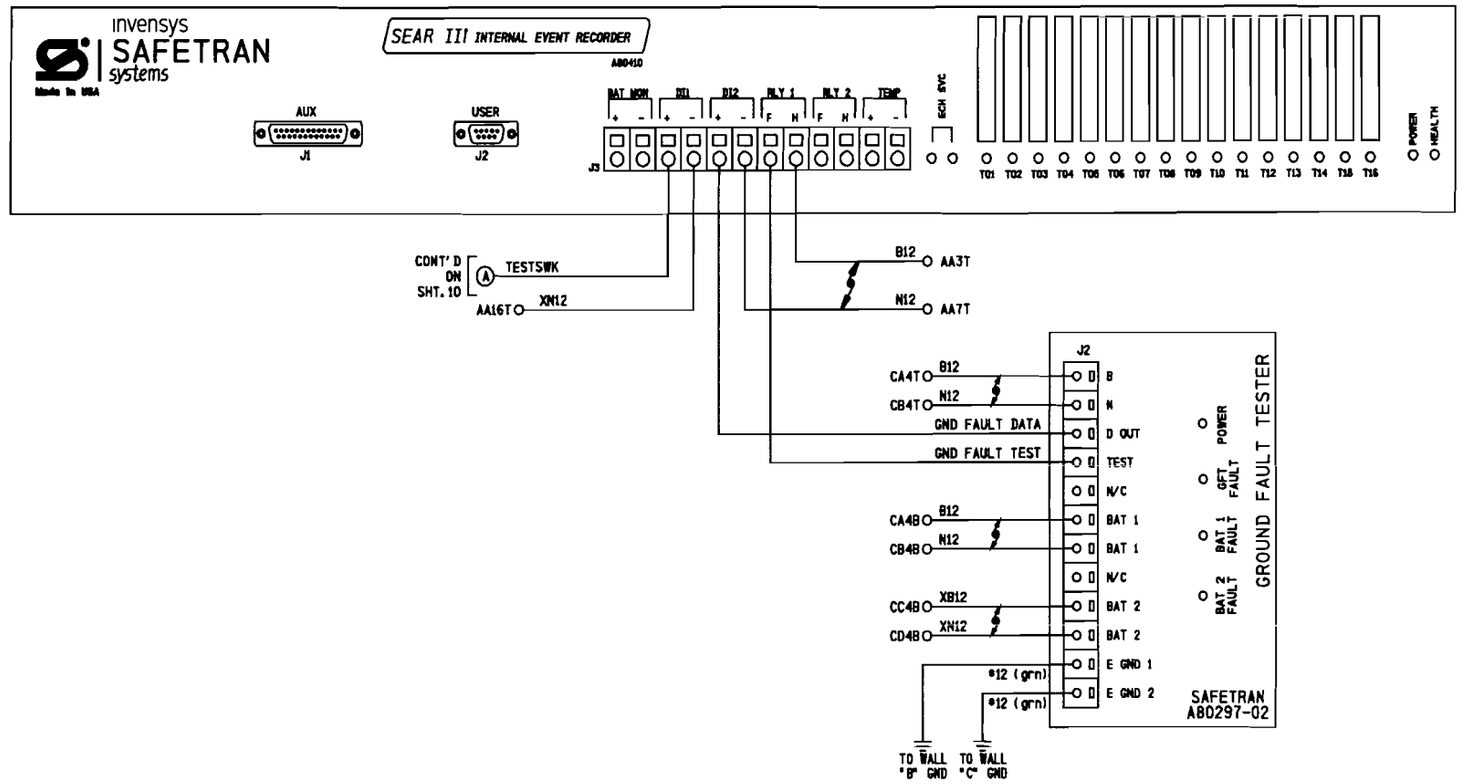

REVISIONS				
NO.	DATE	BY	DESCRIPTION	APP. BY
1				
2				
3				
4				
5				

SAFETRAN SYSTEMS CORPORATION

DES. : RLB	DATE: 06/20/07	JOB NO. : PICA10120
CKD. : RLC	ISSUE DATE: N/A	EST. NO. :
DRN. : RLB	PLAN NO. : N/A	SHEET N/A OF N/A
P TIME: 14:22	P DATE: 14-JAN-2008	CAD ID. : 18600C09

PROPOSED
DES. No. _____
RED-IN YELLOW-OUT
AS INSTALLED
DATE _____
BY _____

NOTES:

1) ALL WIRING #16 AWG UNLESS OTHERWISE NOTED.

2) DENOTES TWISTED PAIR.

6' X 6' BUNGALOW

PROPOSED			REVISIONS	D	C	COMPLETED			C
D	M	Y				D	M	Y	

DIVISION MIDWEST
SUB. CHAMPAIGN
SD. 1010 C
MP. 186.00 TO 186.50

SIGNALS AND COMMUNICATIONS
EDMONTON, ALBERTA
20 JUNE 2007

DES. RLB
CH. RLC

SAFETRAN INTERNAL EVENT ANALYZER
SEARIII WITH GFT
850N (TR 85A)
NEOGA, IL

M 18600C09

SAFETRAN SYSTEM CORP.

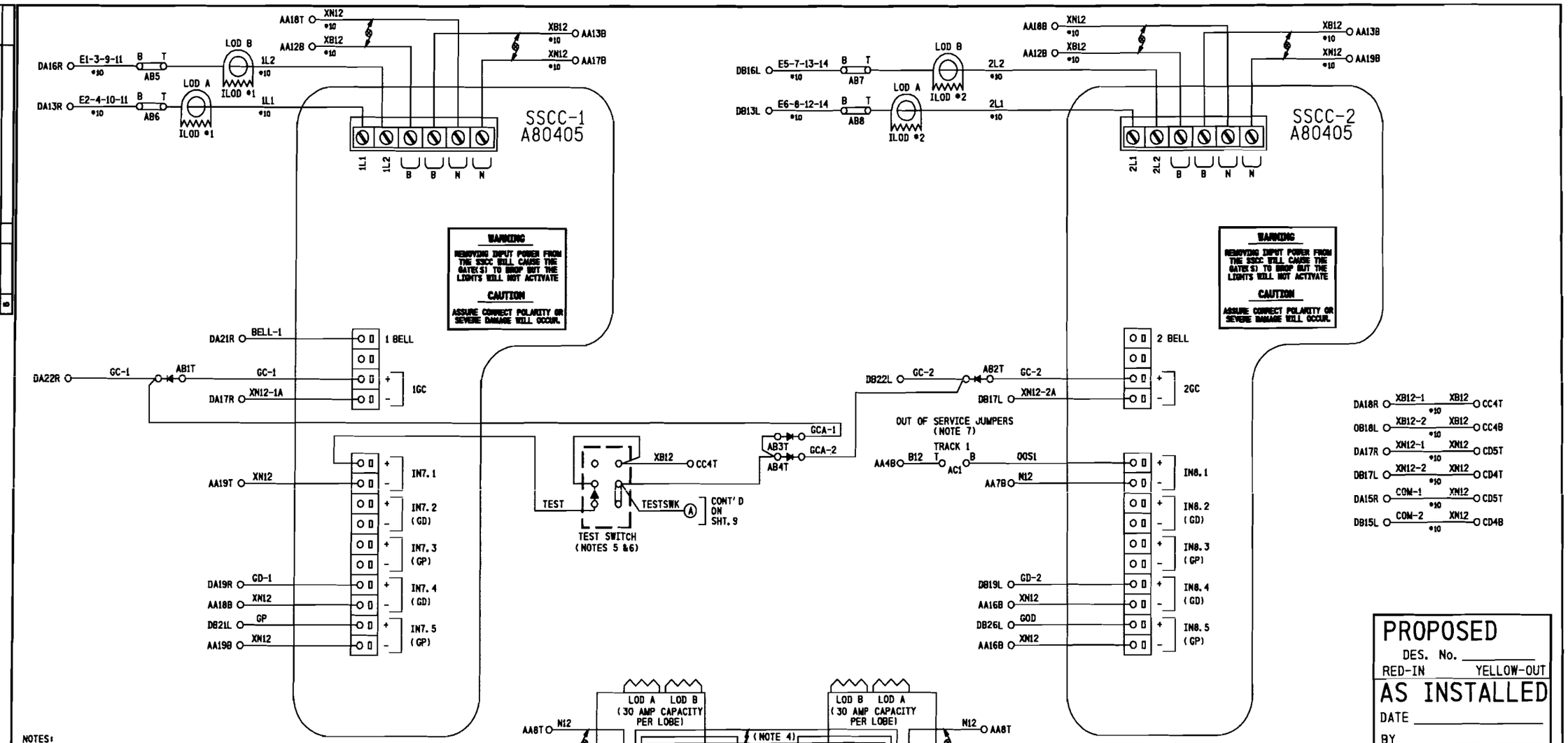

NOTES:

1) DENOTES RECTIFIER : (SAFETRAN #8008A299006)

2) DENOTES TWISTED PAIR.

3) ALL WIRING TO BE #16 AWG MINIMUM UNLESS OTHERWISE NOTED.

4) USE BELDEN CABLE, PART #8461-u500-60 FOR ALL ECHELON AND LAN WIRING.

5) MULTI-UNIT TERMINAL BLOCK

6) IF LINK IS CONNECTED BETWEEN XB12 AND TESTSWK TERMINAL GATES WILL REMAIN IN UP POSTION.

7) TO TAKE TRACK 1 (T1) OUT OF SERVICE, JUMPER AC1T TO AC1B

PROPOSED
DES. No. _____
RED-IN YELLOW-OUT
AS INSTALLED
DATE _____
BY _____

6' X 6' BUNGALOW

PROPOSED D	M	Y	REVISIONS	D	C	COMPLETED D	M	Y	C

DIVISION MIDWEST
SUB. CHAMPAIGN
SD. 1010 C
MP. 186.00 TO 186.50

SIGNALS AND COMMUNICATIONS EDMONTON, ALBERTA — DES. RLB
20 JUNE 2007 — CH. RLC

GCP 4000 SSCC3+ MODULE
ISOLATED GATE 40AMP CONTROLLER
850N (TR 85A)

NEOGA, IL

M 18600C10

SAFETRAN SYSTEM CORP.
LOUISVILLE DIVISION LOUISVILLE, KY

NO.	DATE	BY	DESCRIPTION	APP. BY
1				
2				
3				
4				
5				

REVISIONS

SAFETRAN SYSTEMS CORPORATION

DES. : RLB	DATE: 06/20/07	JOB NO. : PICAUN20	
CKD. : RLC	ISSUE DATE: N/A	EST. NO. :N/A	
DRN. : RLB	PLAN NO. :N/A	SHEET N/A OF N/A	
P TIME:14:22	P DATE: 14-JAN-2008	CAD ID. : 18600C10	

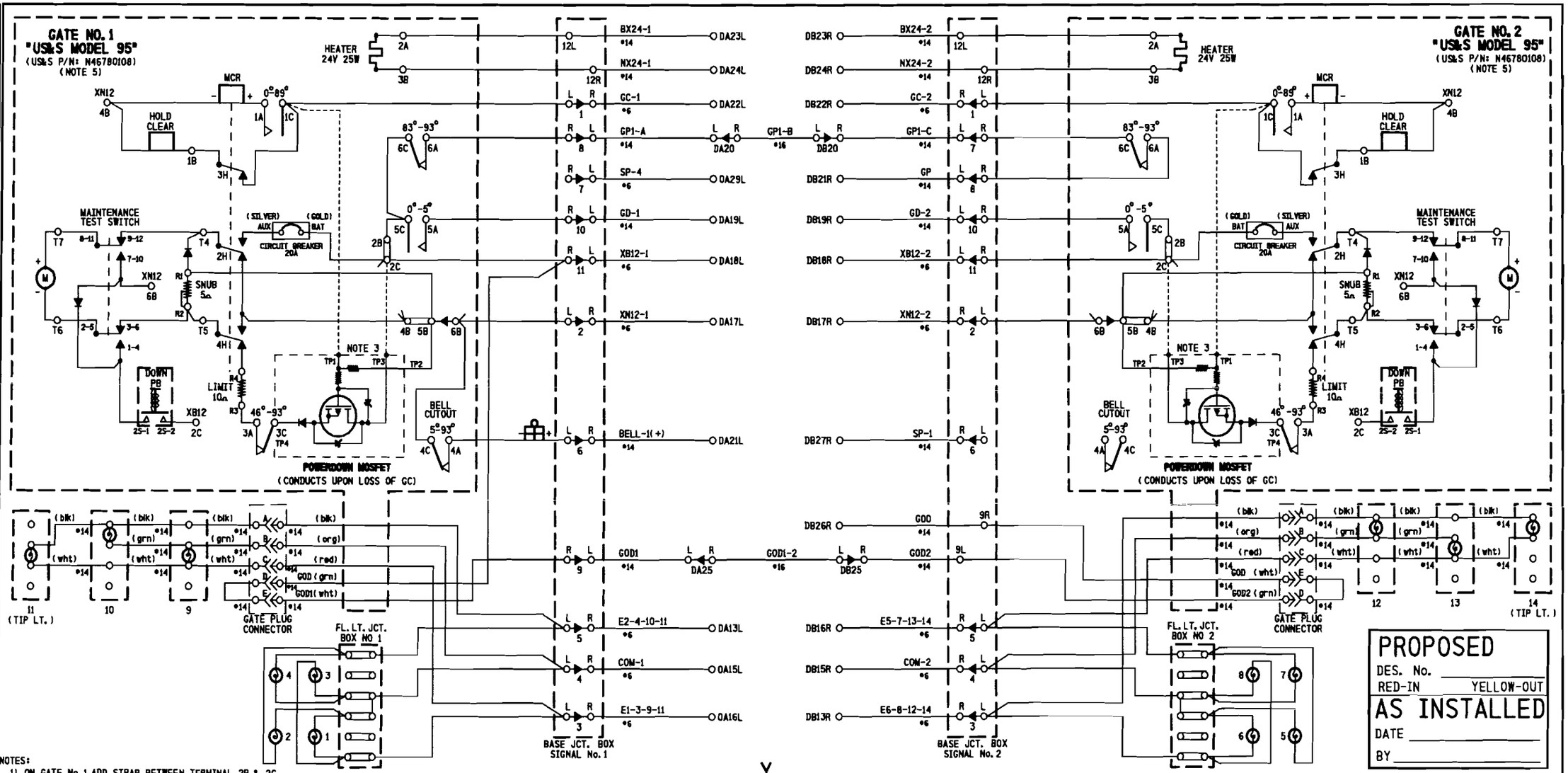

NOTES:

1) ON GATE No. 1 ADD STRAP BETWEEN TERMINAL 2B & 2C ADD JUMPER BETWEEN TERMINAL 2B & 5C AND BETWEEN TERMINAL 5C & 6C.
2) ON GATE No. 2 ADD STRAP BETWEEN TERMINAL 2B & 2C ADD JUMPER BETWEEN TERMINAL 2B & 5C AND CONNECT GP AS SHOWN.
3) POWERDOWN PCB TERMINALS TP1, TP3 & TP4 FIT OVER TERMINALS 1C, 2C & 3C RESPECTIVELY.
4) ALL WIRING #10 AWG MINIMUM UNLESS OTHERWISE NOTED. WIRE SIZES SHOWN ARE MINIMUM GAUGE.
5) GATE DESCENT TIME (RELEASE FROM VERTICAL TO FULLY HORIZONTAL) TO BE WITHIN 11 SECONDS.
6) ENSURE ALL TERMINALS HAVE TWO SHOULDER NUTS.
7) FOR GATE(S) THAT HAS BELL, ADD JUMPER BETWEEN 4C AND 6B.

NO.	DATE	BY	DESCRIPTION	APP. BY
1				
2				
3				
4				
5				

SAFETRAN SYSTEMS CORPORATION

DES. : RLB	DATE: 06/20/07	JOB NO. : PTCA1020	
CKD. : RLC	ISSUE DATE: N/A	EST. NO. : N/A	
DRN. : RLB	PLAN NO. : N/A	SHEET N/A OF N/A	
P. TIME: 14:22	P. DATE: 14-JAN-2006	CAD ID. : 18600C11	

PROPOSED
DES. No. _____
RED-IN YELLOW-OUT
AS INSTALLED
DATE _____
BY _____

PROPOSED D	M	Y	REVISIONS	D	C	COMPLETED D	M	Y	C

DIVISION MIDWEST
SUB. CHAMPAIGN
SD. 1010 C
MP. 186.00 TO 186.50

SIGNALS AND COMMUNICATIONS EDMONTON, ALBERTA
20 JUNE 2007
DES. RLB
CH. RLC

GATE MECHANISM CONTROL CIRCUITS
850N (TR 85A)
NEOGA, IL

M 18600C11

SAFETRAN SYSTEM CORP.

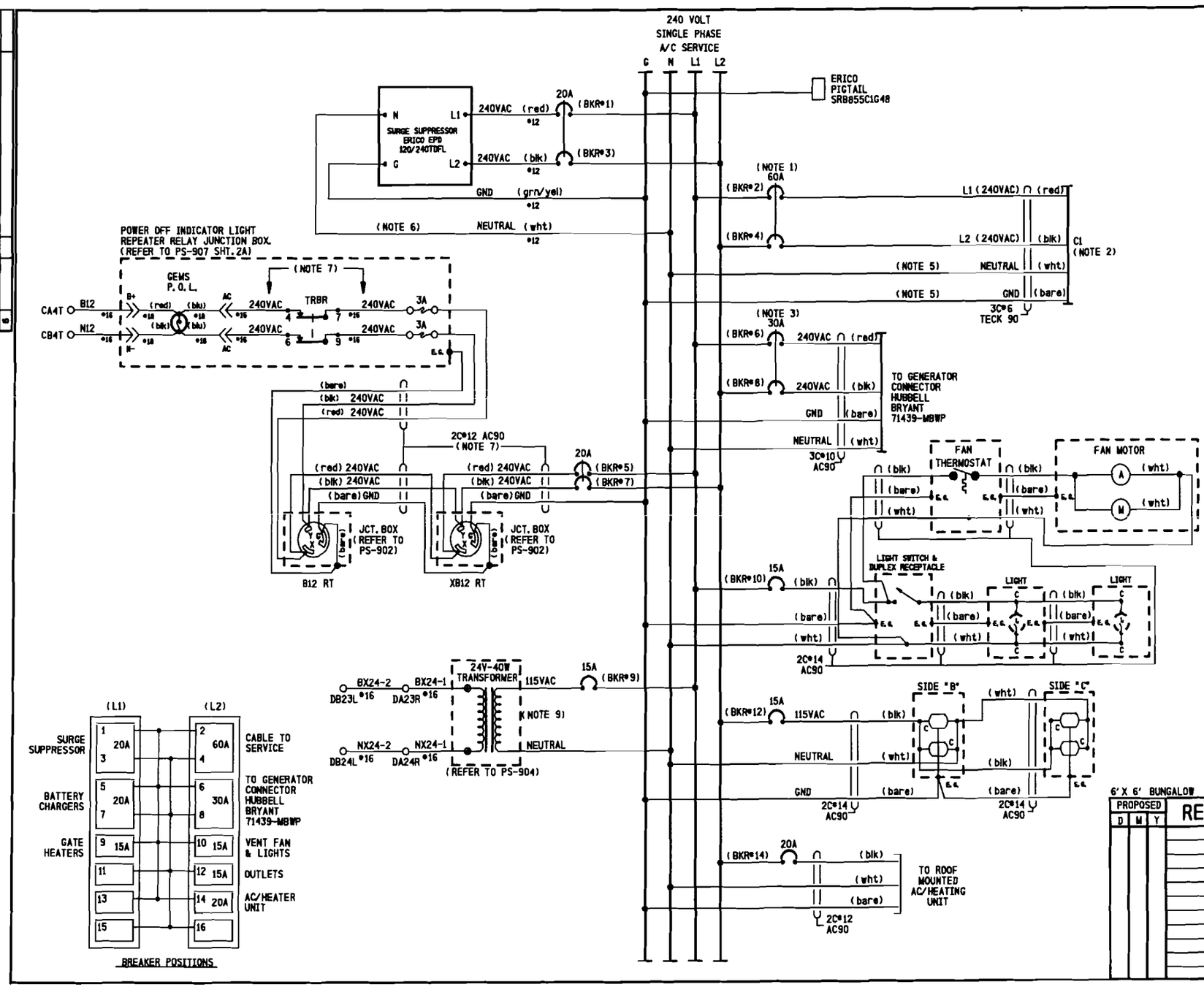

NOTES:

1) CIRCUIT BREAKER NOT TO EXCEED 60 AMPERES. RETAINING KIT PK4MB2LA MUST BE USED WITH 60A BREAKER.
2) FEEDER CIRCUIT BREAKER, AT STUB POLE SERVICE PANEL, NOT TO EXCEED 60 AMPERES.
3) A SWITCH TRANSFER KIT MUST BE INSTALLED BETWEEN THE SERVICE DISCONNECT BREAKER AND THE GENERATOR HOOK UP.
4) WHERE SEPARATE GROUND WIRE EXISTS BETWEEN THE SERVICE AND THE LOAD CENTER, REMOVE THE BRASS COLORED BONDING SCREW. (REFER TO SCHEMATIC ON BOX COVER FOR EXACT LOCATION)
5) S.C. #6 STRANDED, CSA TYPE R90 (X-LINK)
6) KEEP LEADS AS SHORT AS POSSIBLE
7) THE WHITE CONDUCTOR MUST BE MADE PERMANENTLY UNIDENTIFIABLE BY TAPING THIS CONDUCTOR RED. TAPING MUST BE CONTINUOUS WHERE THE SEPARATE CONDUCTORS HAVE BEEN MADE ACCESSIBLE AND VISIBLE.
8) « DENOTES WAGO TERMINAL
9) 24 VOLT - 40 WATT TRANSFORMER (CN STOCK #02-45-367)

NO.	DATE	BY	DESCRIPTION	APP. BY
1				
2				
3				
4				
5				

SAFETRAN SYSTEMS CORPORATION

DES. : RLB	DATE: 06/20/07	JOB NO. : PICA10120	
CKD. : RLC	ISSUE DATE: N/A	EST. NO. : N/A	
DRN. : RLB	PLAN NO. : N/A	SHEET N/A OF N/A	
P TIME: 14:22	P DATE: 14-JAN-2009	CAD ID. : 18600C12	

PROPOSED
DES. No. _____
RED-IN YELLOW-OUT
AS INSTALLED
DATE _____
BY _____

6' X 6' BUNGALOW

PROPOSED D	M	Y	REVISIONS	D	C	COMPLETED D	M	Y	C

DIVISION MIDWEST
SUB. CHAMPAIGN
SD. 1010 C
MP. 186.00 TO 186.50

SIGNALS AND COMMUNICATIONS
EDMONTON, ALBERTA
20 JUNE 2007
DES. RLB
CH. RLC

POWER DISTRIBUTION
850N (TR 85A)
NEOGA, IL

M 18600C12

SAFETRAN SYSTEM CORP.
LOUISVILLE DIVISION LOUISVILLE, KY

REVISIONS				
NO.	DATE	BY	DESCRIPTION	APP. BY
1				
2				
3				
4				
5				

Program Report

Location and SIN

DOT Number: 289162D
Milepost Number: 186.16
Site Name: 850N (TR85A)

SIN: 762010010016

MCF and Template Selection

MCF Name: GCP-T6X-01-2.mcf
MCF Revision: 012
MCFCRC: 0DFE7A0C

Template = 1A:6 Trk BI

Program

BASIC: module configuration
Track 1 Slot = Track
Track 2/RIO 1 Slot = Track
Track 3 Slot = Not Used
Track 4 Slot = Not Used
Track 5/RIO 2 Slot = Not Used
Track 6/RIO 3 Slot = Not Used
SSCC-1 Slot = SSCC3I
SSCC-2 Slot = SSCC3I
SEAR Used = Yes

BASIC: MS/GCP operation
Track 1 : MS/GCP Operation = Yes
Track 2 : MS/GCP Operation = Yes

BASIC: Island operation
Track 1 : Island Used = Internal
Track 2 : Island Used = Internal

BASIC: preemption
Preempt Logic = No

BASIC: radio Dax links
Radio DAX link A Used = No
Radio DAX link B Used = No

BASIC: Vital Comms links
Vital Comms link 1 Used = No
Vital Comms link 2 Used = No

PREDICTORS: track 1
Track 1 : Prime Used = Yes
Track 1 : Dax A Used = No
Track 1 : Dax B Used = No
Track 1 : Dax C Used = No
Track 1 : Dax D Used = No
Track 1 : Dax E Used = No
Track 1 : Dax F Used = No
Track 1 : Dax G Used = No

PREDICTORS: track 2
Track 2 : Prime Used = Yes
Track 2 : Dax A Used = No
Track 2 : Dax B Used = No
Track 2 : Dax C Used = No
Track 2 : Dax D Used = No
Track 2 : Dax E Used = No
Track 2 : Dax F Used = No
Track 2 : Dax G Used = No

GCP: track 1
Track 1 : GCP Freq Category = Standard
Track 1 : GCP Frequency = 156 Hz
Track 1 : Approach Distance = 4000 ft
Track 1 : Uni/Bi/Sim-Bidirni = Bidirni
Track 1 : GCP Transmit Level = High
Track 1 : Island Connection = Isi1
Track 1 : Island Distance = 120 ft
Track 1 : Computed Distance = 9999 ft
Track 1 : Linearization Steps = 100

GCP: track 1 prime
Track 1 : Prime Warning Time = 26 sec
Track 1 : Prime Offset Distance = 0 ft
Track 1 : Switch MS EZ Level = 9
Track 1 : Prime MS/GCP Mode = Pred
Track 1 : Prime Pickup Delay = 30 sec
Track 1 : Prime UAX = IP
Track 1 : Prime UAX Pickup = 25 sec

GCP: track 1 low EZ detect
Track 1 : Low EZ Detection Used = No
Track 1 : Positive Start = Off
Track 1 : Enhanced Detectn Used = Yes
Track 1 : Station Stop Timer = 10 sec
Track 1 : False Activate Level = Normal
Track 1 : Poor Shunting Level = 2

GCP: track 1 MS Control
Track 1 : MS/GCP Ctrl IP Used = No
Track 1 : MS Sensitivity Level = 0
Track 1 : Compensation Level = 1300
Track 1 : Low EX Adjustment = 39
Track 1 : Bidirn Dax Passthru = No

GCP: track 2
Track 2 : GCP Freq Category = Standard
Track 2 : GCP Frequency = 211 Hz
Track 2 : Approach Distance = 2055 ft
Track 2 : Uni/Bi/Sim-Bidirni = Bidirni
Track 2 : GCP Transmit Level = High
Track 2 : Island Connection = Isi2
Track 2 : Island Distance = 120 ft
Track 2 : Computed Distance = 9999 ft
Track 2 : Linearization Steps = 100

GCP: track 2 prime
Track 2 : Prime Warning Time = 26 sec
Track 2 : Prime Offset Distance = 0 ft
Track 2 : Switch MS EZ Level = 15
Track 2 : Prime MS/GCP Mode = Pred
Track 2 : Prime Pickup Delay = 30 sec
Track 2 : Prime UAX = Not Used

GCP: track 2 low EZ detect
Track 2 : Low EZ Detection Used = No
Track 2 : Positive Start = Off
Track 2 : Enhanced Detectn Used = Yes
Track 2 : Station Stop Timer = 10 sec
Track 2 : False Activate Level = Normal
Track 2 : Poor Shunting Level = 2

GCP: track 2 MS Control
Track 2 : MS/GCP Ctrl IP Used = No
Track 2 : MS Sensitivity Level = 0
Track 2 : Compensation Level = 1300
Track 2 : Low EX Adjustment = 39
Track 2 : Bidirn Dax Passthru = No

ISLAND: track 1
Track 1 : Isi Frequency = 5.9 kHz
Track 1 : Pickup Delay (2s +) = 0 sec

ISLAND: track 2
Track 2 : Isi Frequency = 7.1 kHz
Track 2 : Pickup Delay (2s +) = 0 sec

AND: track Anding
AND 1 XR Used = Yes
AND 2 Used = No
AND 3 Used = No
AND 4 Used = No
AND 5 Used = No
AND 6 Used = No
AND 7 Used = No
AND 8 Used = No

AND: AND 1 XR
AND 1 XR Track 1 = Prime
AND 1 XR Track 2 = Prime
AND 1 Enable Used = Yes
AND 1 Enable Pickup = 5 Sec
AND 1 Enable Drop = 0 Sec
AND 1 Wrap Used = No

ADVANCED: MS restart
MS/GCP Restart Used = No

ADVANCED: out of service
OOS Control = OOS IPs

ADVANCED: out of service 2
T1 OOS Control = OOS Input 1
T2 OOS Control = OOS Input 2
T1 OOS Controls = GCP and Island
T2 OOS Controls = GCP and Island

ADVANCED: track wrap circuits
Wrap LOS Timer = 5 sec
Track 1 Wrap Used = No
Track 2 Wrap Used = No

ADVANCED: trk 1 overrides
Track 1 : All Predictors Override Used = No

ADVANCED: trk 2 overrides
Track 2 : All Predictors Override Used = No

ADVANCED: OR logic
OR 1 Used = No
OR 2 Used = No
OR 3 Used = No
OR 4 Used = No

ADVANCED: Internal I/O 1
Pass Thrus = No
Int.1 Sets = Not Used
Int.1 Set by = Not Used
Int.2 Sets = Not Used
Int.2 Set by = Not Used
Int.3 Sets = Not Used
Int.3 Set by = Not Used
Int.4 Sets = Not Used
Int.4 Set by = Not Used

ADVANCED: Internal I/O 2
Int.5 Sets = Not Used
Int.5 Set by = Not Used
Int.6 Sets = Not Used
Int.6 Set by = Not Used
Int.7 Sets = Not Used
Int.7 Set by = Not Used
Int.8 Sets = Not Used
Int.8 Set by = Not Used

ADVANCED: site options
Daylight Savings = On
Units = Standard
Ext Maint Call Input = No
Emergency Activate IP = No
EZ/EX Logging = Change
EZ/EX Point Change = 3

SSCC
Gates Used = Yes
SSCC1+2 GPs Coupled = Yes
Min Activation = 20 sec
Rmt Activation Cancel = 3 min
Bell On Gate Rising = No
Mute Bell On Gate Down = No
SSCCIV Controller Used = No

SSCC: 1
SSCC-1 Activation = AND 1 XR
SSCC-1 Gate Delay = 3 sec
SSCC-1 Number of GPs = 1
SSCC-1 Number of GDs = 1
SSCC 1 : Flash Rate = 60
SSCC 1 : Low Battery Detection = No
SSCC 1 : Flash Sync = master
SSCC 1 : Invert Gate Output = No
SSCC 1 : Lamp Neutral Test = Off
Aux-1 Xng Ctrl Used = No

SSCC: 2
SSCC-2 Activation = AND 1 XR
SSCC-2 Gate Delay = 3 sec
SSCC-2 Number of GPs = 0
SSCC-2 Number of GDs = 1
SSCC 2 : Flash Rate = 60
SSCC 2 : Low Battery Detection = No
SSCC 2 : Flash Sync = slave
SSCC 2 : Invert Gate Output = No
SSCC 2 : Lamp Neutral Test = Off
Aux-2 Xng Ctrl Used = No

OUTPUT: assignment page 1
OUT 1.1 = Not Used
OUT 1.2 = Not Used
OUT 2.1 = Not Used
OUT 2.2 = Not Used

INPUT: assignment page 1
IN 1.1 = T1 Prime UAX
IN 1.2 = Not Used
IN 2.1 = Not Used
IN 2.2 = Out Of Service IP 2

IO: assignment SSCC
OUT GC 1 = Gate Output 1
OUT GC 2 = Gate Output 2
IN 7.1 = AND 1 XR Enable
IN 7.2 = Not Used
IN 7.3 = Not Used
IN 7.4 = GD 1.1
IN 7.5 = GP 1.1
IN 8.1 = Out Of Service IP 1
IN 8.2 = Not Used
IN 8.3 = Not Used
IN 8.4 = GD 2.1
IN 8.5 = Not Used

SEAR
SEAR Subnode = 99
DI 1 = General1
DI 2 = Gnd Flt Tester 1
Rly 1 = Ground Fault Test
Rly 2 = Not Used

SEAR: Inputs
SP 2.1 = Not Used
SP 3.1 = Not Used
SP 4.1 = Not Used
SP 5.1 = Not Used
SP 6.1 = Not Used

SEAR: slot 1-4 Inputs
IN 1.2 = Not Used
IN 2.1 = Not Used
IN 3.1 = Not Used
IN 3.2 = Not Used
IN 4.1 = Not Used
IN 4.2 = Not Used

SEAR: Inputs slot 5
IN 5.1 = Not Used
IN 5.2 = Not Used

SEAR: Inputs slot 6
IN 6.1 = Not Used
IN 6.2 = Not Used

SEAR: slot 7-8 Inputs
IN 7.1 = Not Used
IN 7.2 = Not Used
IN 7.3 = Not Used
IN 8.2 = Not Used
IN 8.3 = Not Used
IN 8.5 = General2

SITE: programming
Radio Subnode = 1
Password Access = Off
Low Battery Enabled = Off

Configuration Package File

Filename: 289162D.pac

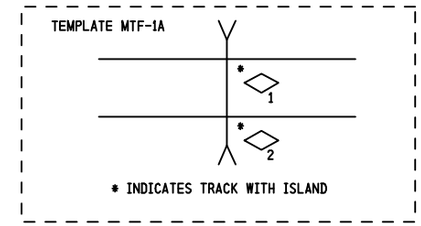

NOTES:

1) DISTANCE(S) TO BE VERIFIED AT INSTALLATION.
INDICATE SELECTED PROGRAMMED VALUE IF DIFFERENT THAN SHOWN.
REFER TO 4000 GCP INSTRUCTION/INSTALLATION MANUAL
FOR PROGRAMMING PARAMETERS.

2) PROGRAM TEXT HIGHLITED IN RED INDICATES 4000 PROGRAM
MODIFICATIONS TO DEFAULT PROGRAM VALUES.

3) EACH CONSTANT WARNING DEVICE SYSTEM TO BE PROGRAMMED TO
CONVERT TO A MOTION SENSOR 300 FEET FROM EDGE OF ROAD
TRAVELLED WAY.
SHUNT TRACK 300 FEET FROM EDGE OF ROAD TRAVELLED WAY
AND NOTE "EZ" VALUE.
PROGRAM EACH SYSTEM WITH THE INDICATED "EZ" VALUE +2.

4) VERIFY SET TIMER VALUE TO MATCH ACTUAL TRAIN MOVEMENT
WITHIN THE CROSSING APPROACH CIRCUITS.

PROPOSED
DES. No. _____
RED-IN YELLOW-OUT
AS INSTALLED
DATE _____
BY _____

PROPOSED			REVISIONS	D	C	COMPLETED			C
D	M	Y				D	M	Y	

DIVISION MIDWEST
SUB. CHAMPAIGN
SD. 1010 C
MP. 186.00 TO 186.50

SIGNALS AND COMMUNICATIONS
EDMONTON, ALBERTA
20 JUNE 2007
DES. RLB
CH. RLC

GCP 4000 NON REDUNDANT
PROGRAM INFORMATION
850N (TR85A)
NEOGA, IL

M 18600C13

SAFETRAN SYSTEM CORP.
LOUISVILLE DIVISION, LOUISVILLE, KY

SAFETRAN SYSTEMS CORPORATION

DES. : RLB	DATE: 06/20/07	JOB NO. : PICA10120	
CKD. : RLC	ISSUE DATE: N/A	EST. NO. :N/A	
DRN. : RLB	PLAN NO. :N/A	SHEET N/A OF N/A	
P TIME:08:32	P DATE: 21-FEB-2008	CAD ID. : 18600C13	

REVISIONS			
NO.	DATE	BY	DESCRIPTION	APP. BY
1				
2				
3				
4				
5				

TO CONFIGURE SEARII & SEARIII PRESS SITE SETUP KEY. USE ARROW KEYS TO MAKE SELECTION, PRESS ENTER AFTER SELECTION HAS BEEN MADE.

STAGE 1

PROGRAM MENU QUESTIONS	PROGRAM	OPTIONS/RANGE
DATE/TIME?	CURRENT DATE/TIME	CURRENT DATE/TIME
AUTOMATIC DST ADJUSTMENT?	YES	YES, NO
TIME ZONE?	CENTRAL	EASTERN, CENTRAL, MOUNTAIN, PACIFIC, ALASKA, HAWAII, ATLANTIC, SASKATCHEWAN, NEW FOUNLAND
SITE NAME?	850N	STREET NAME
MILE POST?	186.16	MILEAGE
DOT/CROSSING IS *?	289 162D	
TESTER TYPE?	CROSSING	CROSSING, WAYSIDE
DATE FORMAT?	dd-mm-yyyy	mm-dd-yyyy, dd-mm-yyyy
TEMPERATURE FORMAT?	FAHRENHEIT	FAHRENHEIT, CELSIUS
SITE TYPE?	NO COM	NO COM, BULLHORN, DIALUP, NODE, COLLECTOR
SITE ATCS ADDRESS?	7.620.100.100.99.01	7.RRR.LLL.GGG.99.01
OFFICE ATCS ADDRESS?		2.RRR.NN.DDDD
(FOR NODE USE) PRIMARY HOP ADDR?		7.RRR.LLL.GGG.00.01
(FOR NODE USE) BACKUP HOP ADDR1?		7.RRR.LLL.GGG.00.01
(FOR NODE USE) BACKUP HOP ADDR2?		7.RRR.LLL.GGG.00.01
(FOR COLLECTOR USE) POLL ID?		1-99
(FOR COLLECTOR USE) MODE?		GEN/ATCS, GENISYS
(FOR COLLECTOR USE) WAMS/XID?		ENABLED, DISABLE
(FOR COLLECTOR USE) OFFICE COMM. DEVICE?		DIRECT (RS232) MCM (RS232) MCM (ECHELON) SREAD SPEC (ECHELON) DIAL MODEM (RS232) S200 RADIO (RS422)
(FOR COLLECTOR USE) OFFICE PHONE NUMBER?		PHONE NUMBER OF WAMS
(FOR COLLECTOR USE) INIT STRING?		OPTIONAL HAYES MODEM INITIALIZATION STRING
FIELD COMM. DEVICE?		VHF COMM. (ECHELON) VHF COMM. (RS232) SPREAD SPEC (ECHELON) SPREAD SPEC (RS232)
USER PORT?	57600, 8, N, 1, N	BAUD, DATA BITS, PARITY, STOP BITS, FLOW CONTROL
AUX PORT?	9600, 8, N, 1, N	BAUD, DATA BITS, PARITY, STOP BITS, FLOW CONTROL

YOU WILL NOW SEE A MESSAGE "PLEASE WAIT COMPILING STAGE 1"
CONTINUE TO NEXT PROGRAM MENU QUESTIONS.

STAGE 2

QUESTION	PROGRAM	SELECTION 1 (MINIMUM)	SELECTION 2 (MAXIMUM)	CONDITION FOR MENU DISPLAY
RESET NAMES / MODULES ?	NO	YES	NO	ALWAYS
RAILROAD NUMBER ?	360 (IC)	1	999	ALWAYS
CROSSING CONFIGURATION	NORMAL	NORMAL	SPLIT GATE (NOTE 2)	ALWAYS
ENTRANCE GATES ?	0 (NOTE 3)	0	8	ALWAYS
GATE POSTION FAIL TIME (SECONDS) ?	N/A	10	60	GATES > 0
BATTERY BANKS ?	2	1	3	ALWAYS
BATT MON USED ?	NO	NO	YES	ALWAYS
INTERNAL CROSSING CONTROLLERS ?	2	0	2	ALWAYS
EXTERNAL CROSSING CONTROLLERS ?	0	0	2	CROSSING CONTROLLER = YES
VHF COMMUNICATOR ?	YES	YES	NO	ALWAYS
DTMF ACTIVATION?	NO	NO	YES	RAILROAD = 360 (IC)
ACTIVATION CODE ?	N/A	1	999	VHF COMMUNICATOR = YES
ACTIVATION TIMEOUT ?	N/A	1	600	VHF COMMUNICATOR = YES
ILOD MODULES ?	2	0	4	ALWAYS
ANY LED BULBS USED ?	YES	NO	YES	ILOD MODULES > 0
AUTO INSPECTION ?	NO	YES	NO	ALWAYS
BELL SENSORS ?	0	0	6	ALWAYS
BELL SENSORS TSS1 ?	N/A	NO	YES	BELL SENSORS > 0
BELL SENSORS TSS2 ?	N/A	NO	YES	BELL SENSORS > 0
BELL SENSORS TSS3 ?	N/A	NO	YES	BELL SENSORS > 0
BELL SENSORS TSS4 ?	N/A	NO	YES	BELL SENSORS > 0
BELL SENSORS TSS5 ?	N/A	NO	YES	BELL SENSORS > 0
BELL SENSORS TSS6 ?	N/A	NO	YES	BELL SENSORS > 0
BELL SENSORS TSS7 ?	N/A	NO	YES	BELL SENSORS > 0
BELL SENSORS TSS8 ?	N/A	NO	YES	BELL SENSORS > 0
BELL ON ?	N/A	GATES LOWERING	GATES MOVING	BELL SENSORS > 0
GFT'S ?	YES	YES	NO	ALWAYS
BATTERIES ON GFT1 ?	2	1	2	GFT'S = YES
GATE TIP SENSORS ?	N/A	YES	NO	GATES > 0
RTU ?	NO	NO	YES	ALWAYS
VHF VOICE CHANNEL ?	1 (NOTE 1)	1	8	VHF COMMUNICATOR = YES
VHF DATA CHANNEL ?	1 (NOTE 1)	1	8	VHF COMMUNICATOR = YES
USE CELL MODEM NON-CRITICAL FEATURE ?	NO	NO	YES	ALWAYS
FULL APPROACH MOVE ALARMS ?	ACTIVATE	ACTIVATE	DO NOT ACTIVATE	ALWAYS

YOU WILL NOW SEE A MESSAGE "PLEASE WAIT COMPILING STAGE 2"
CONTINUE TO NEXT PROGRAM MENU QUESTIONS.

STAGE 3

PROGRAM MENU QUESTIONS	PROGRAM
EDIT DIGITAL INPUTS	NO
EDIT BATTERIES	NO
EDIT RELAYS	NO
EDIT TEST LEDS	NO
EDIT ILOD SENSORS	NO
EDIT VHF SETTINGS	NO
GCP4K ATCS SUBNODE?	16

SAVE CONFIGURATION

NOTES:

1) INDICATE SELECTION IN SPACE PROVIDED.
2) ADDITIONAL OPTIONS: DUAL CROSSING, EXTERNAL ENTRANCE GATE CONTROLLERS.
3) SELECT "0" IF NO GATE TIP AND BELL SENSORS ARE USED.
THUS GATE AND BELL SENSOR RELATED STEPS WILL NOT BE AVAILABLE,
OVERWISE ERRORS IN SEARS RECORDING WILL OCCUR.

PROPOSED
DES. No. _____
RED-IN YELLOW-OUT
AS INSTALLED
DATE _____
BY _____

SEARII EXECUTIVE SOFTWARE: 9V725-A01T SEARII APPLICATION SOFTWARE: 9V864-A01H

PROPOSED D	M	Y	REVISIONS	D	C	COMPLETED D	M	Y	C

DIVISION MIDWEST
SUB. CHAMPAIGN
SD. 1010 C
MP. 186.00 TO 186.50

SIGNALS AND COMMUNICATIONS EDMONTON, ALBERTA
DES. RLB
20 JUNE 2007
CH. RLC

SEARIII
SETUP AND PROGRAM
850N (TR 85A)
NEOGA, IL

M 18600C14

SAFETRAN SYSTEM CORP.
LOUISVILLE DIVISION, LOUISVILLE, KY

SAFETRAN SYSTEMS CORPORATION
DES. : RLB DATE: 06/20/07 JOB NO. : PCA10130
CKD. : RLC ISSUE DATE: N/A EST. NO. N/A
DWN. : RLB PLAN NO. N/A SHEET N/A OF N/A
P TIME: 14:22 P DATE: 14-JAN-2008 CAD ID. : 18600C14

NO.	DATE	BY	DESCRIPTION	APP. BY
1				
2				
3				
4				
5				

REVISIONS

CALIBRATION HISTORY

INITIAL SET UP BY: _____ DATE: _____

DC VOLTAGE READINGS AFTER CALIBRATION				CALIBRATION HISTORY										LINEARIZATION HISTORY (NOTE 1)							
				EZ/EX VALUES (TRACK UNOCCUPIED)				HARD WIRE SHUNT AT TERMINATION SHUNT						HARD WIRE SHUNT AT 50 PERCENT POINT OF SHUNT							
				EZ		EX		EZ		EX		50 PERCENT OF EZ VALUE		NO LINEARIZATION				LINEARIZATION COMPLETE			
														EZ		EX		STEP±		EZ	
				NRML	STBY	NRML	STBY	NRML	STBY	NRML	STBY	NRML	STBY	NRML	STBY	NRML	STBY	NRML	STBY	NRML	STBY
T1	Z1=	NORTH	TRACK 1																		
	Z2=	SOUTH	TRACK 1																		
T2	Z1=	NORTH	TRACK 2																		
	Z2=	SOUTH	TRACK 2																		

CALIBRATION HISTORY

INITIAL SET UP BY: _____ DATE: _____

DC VOLTAGE READINGS AFTER CALIBRATION				CALIBRATION HISTORY										LINEARIZATION HISTORY (NOTE 1)							
				EZ/EX VALUES (TRACK UNOCCUPIED)				HARD WIRE SHUNT AT TERMINATION SHUNT						HARD WIRE SHUNT AT 50 PERCENT POINT OF SHUNT							
				EZ		EX		EZ		EX		50 PERCENT OF EZ VALUE		NO LINEARIZATION				LINEARIZATION COMPLETE			
														EZ		EX		STEP±		EZ	
				NRML	STBY	NRML	STBY	NRML	STBY	NRML	STBY	NRML	STBY	NRML	STBY	NRML	STBY	NRML	STBY	NRML	STBY
T1	Z1=	NORTH	TRACK 1																		
	Z2=	SOUTH	TRACK 1																		
T2	Z1=	NORTH	TRACK 2																		
	Z2=	SOUTH	TRACK 2																		

CALIBRATION HISTORY

INITIAL SET UP BY: _____ DATE: _____

DC VOLTAGE READINGS AFTER CALIBRATION				CALIBRATION HISTORY										LINEARIZATION HISTORY (NOTE 1)							
				EZ/EX VALUES (TRACK UNOCCUPIED)				HARD WIRE SHUNT AT TERMINATION SHUNT						HARD WIRE SHUNT AT 50 PERCENT POINT OF SHUNT							
				EZ		EX		EZ		EX		50 PERCENT OF EZ VALUE		NO LINEARIZATION				LINEARIZATION COMPLETE			
														EZ		EX		STEP±		EZ	
				NRML	STBY	NRML	STBY	NRML	STBY	NRML	STBY	NRML	STBY	NRML	STBY	NRML	STBY	NRML	STBY	NRML	STBY
T1	Z1=	NORTH	TRACK 1																		
	Z2=	SOUTH	TRACK 1																		
T2	Z1=	NORTH	TRACK 2																		
	Z2=	SOUTH	TRACK 2																		

NOTE:

1) **SET UP APPROACH LENGTH AND LINEARIZATION CALIBRATION**
VERIFY THAT "ENHANCED DETECTION" MODE IS PROGRAMMED "OFF" BEFORE ATTEMPTING LINEARIZATION PROCEDURES.

PROPOSED
DES. No. _____
RED-IN YELLOW-OUT
AS INSTALLED
DATE _____
BY _____

6' X 6' BUNGALOW

PROPOSED D	M	Y	REVISIONS	D	C	COMPLETED D	M	Y	C

DIVISION MIDWEST
SUB. CHAMPAIGN
SD. 1010 C
MP. 186.00 TO 186.50

SIGNALS AND COMMUNICATIONS EDMONTON, ALBERTA | DES. RLB
20 JUNE 2007 | CH. RLC

GCP 4000
CALIBRATION HISTORY
850N (TR 85A)
NEOGA, IL

M 18600C15

SAFETRAN SYSTEM CORP.
LOUISVILLE DIVISION, LOUISVILLE, KY

SAFETRAN SYSTEMS CORPORATION

DES. : RLB	DATE: 06/20/07	JOB NO. : PICA0120	
CKD. : RLC	ISSUE DATE: N/A	EST. NO. : N/A	
DRN. : RLB	PLAN NO. : N/A	SHEET N/A OF N/A	
P. TIME: 14:22	P. DATE: 14-JAN-2008	CAD ID. : 18600C15	