RECEIVED
FEB 11 2008
Illinois Commerce Commission
RAIL SAFETY SECTION

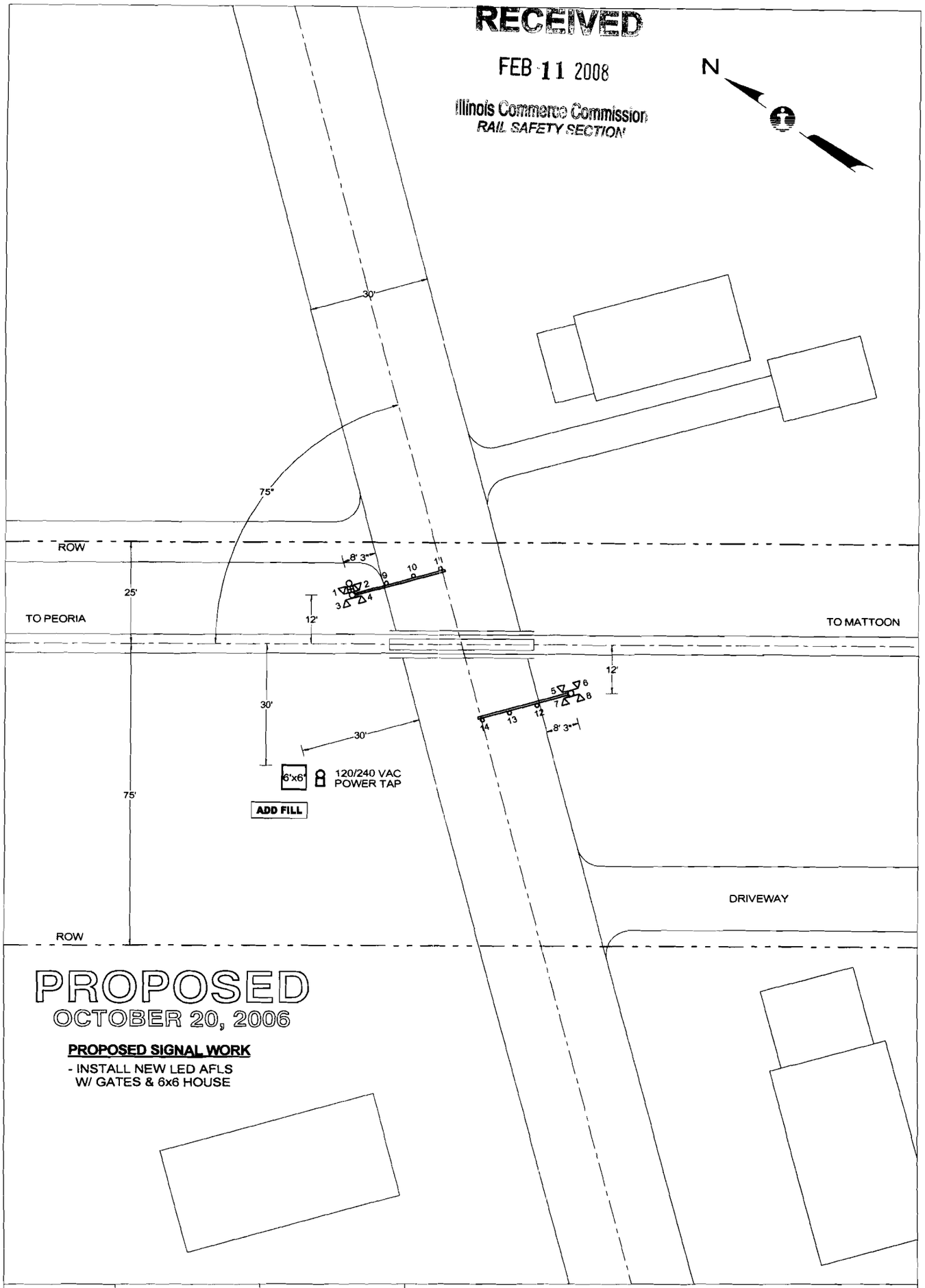

PROPOSED
OCTOBER 20, 2006

PROPOSED SIGNAL WORK

- INSTALL NEW LED AFLS W/ GATES & 6x6 HOUSE

QUADRANT	NE	SW
STANDARD AFLS	LED	LED
CANTILEVER, FT.	-	-
GATE, FT.	24	24
ADDED LIGHTS	-	-
BARRICADE	-	-
MULTI-TK SIGN	-	-
BELL	X	-
REVISIONS		

E:\DWG\PEO\04436X.CAD

CN

SIGNALS & COMMUNICATIONS, ENGINEERING DEPARTMENT

CITY & STATE	LINCOLN, IL	SD	1047 X
CROSSING	McLEAN ST	DATE	OCT 20, 2006
IC -	44.36-B	DOT -	292 768A
MIDWEST	DIVISION	PEORIA	SUBDIVISION
IN SERVICE	SCALE 1"=30'	DRAWN BY	AVS

SD 1047 - MP 43 TO 44

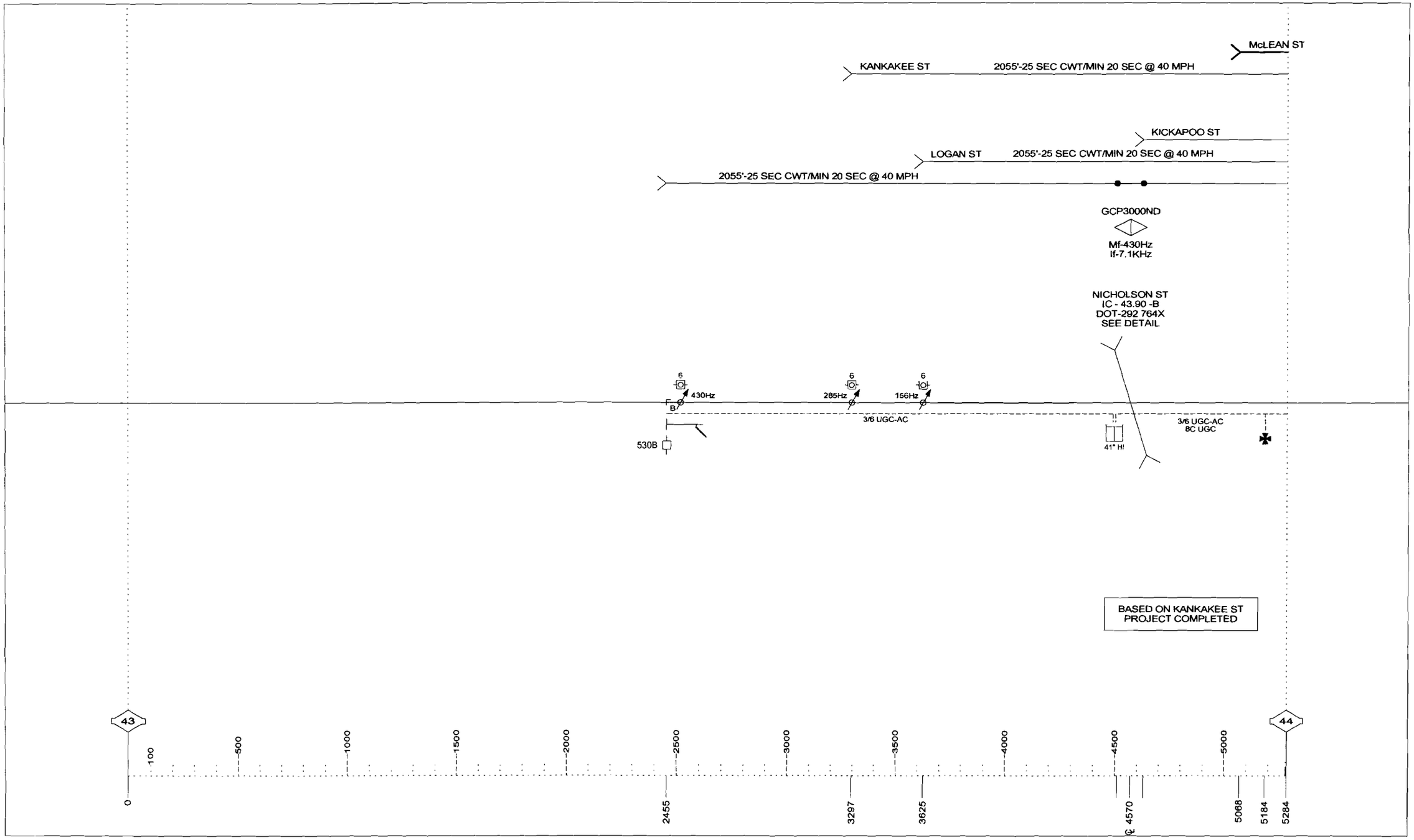

SD 1047 - MP 44 TO 45

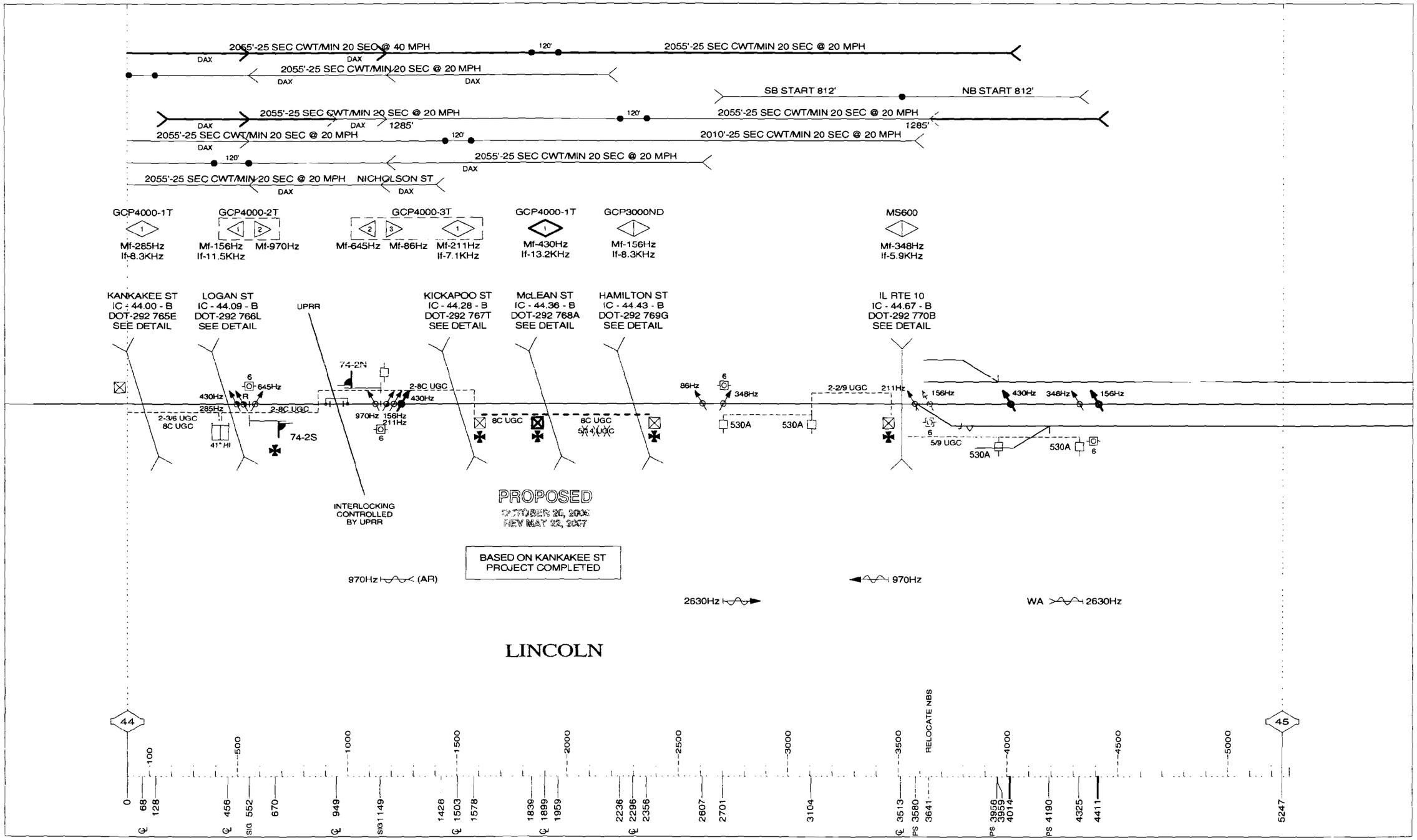

SPEED RESTRICTION - MP 44 TO 46 - 20 MPH

DRAWING SCALE 1" = 500'

6-14-01 8-23-99

NO.	DATE	BY	DESCRIPTION	APP.	BY
1					
2					
3					
4					
5					

REVISIONS

Program Report

Location and SIN

DOT Number: 292766L
MUepost Number: 44.09
Site Name: LOGAN STREET

SIN: 762010010016

MCF and Template Selection

MCF Name: GCP-T6X-01-2.mcf
MCF Revision: 012
MCFCRC: 0DFE7A0C

Template = 1D:3 Uni pairs

Program

BASIC: module configuration
Track 1 Slot = Track
Track 2/RIO 1 Slot = Track
Track 3 Slot = Track
Track 4 Slot = Not Used
Track 5/RIO 2 Slot = Not Used
Track 6/RIO 3 Slot = Not Used
SSCC-1 Slot = SSCC31
SSCC-2 Slot = SSCC31
SEAR Used = Yes

BASIC: WS/GCP operation
Track 1 : WS/GCP Operation = Yes
Track 2 : WS/GCP Operation = Yes
Track 3 : WS/GCP Operation = No

BASIC: Island operation
Track 1 : Island Used = Internal
Track 2 : Island Used = No
Track 3 : Island Used = No

BASIC: preemption
Preempt Logic = No

BASIC: radio Dax links
Radio DAX link A Used = No
Radio DAX link B Used = No

BASIC: Vital Comms links
Vital Comms link 1 Used = No
Vital Comms link 2 Used = No

PREDICTORS: track 1
Track 1 : Prime Used = Yes
Track 1 : Dax A Used = Yes
Track 1 : Dax B Used = Yes
Track 1 : Dax C Used = Yes
Track 1 : Dax D Used = No
Track 1 : Dax E Used = No
Track 1 : Dax F Used = No
Track 1 : Dax G Used = No

PREDICTORS: track 2
Track 2 : Prime Used = Yes
Track 2 : Dax A Used = Yes
Track 2 : Dax B Used = Yes
Track 2 : Dax C Used = No
Track 2 : Dax D Used = No
Track 2 : Dax E Used = No
Track 2 : Dax F Used = No
Track 2 : Dax G Used = No

GCP: track 1
Track 1 : GCP Freq Category = Standard
Track 1 : GCP Frequency = 156 Hz
Track 1 : Approach Distance = 2055 ft
Track 1 : Uni/Bi/Sim-Bidirni = Unidirni
Track 1 : GCP Transmit Level = High
Track 1 : Island Connection = Isl1
Track 1 : Island Distance = 156 ft
Track 1 : Computed Distance = 9999 ft
Track 1 : Linearization Steps = 100

GCP: track 1 prime
Track 1 : Prime Warning Time = 25 sec
Track 1 : Prime Offset Distance = 0 ft
Track 1 : Switch WS EZ Level = 20
Track 1 : Prime WS/GCP Mode = Pred
Track 1 : Prime Pickup Delay = 30 sec
Track 1 : Prime UAX = Not Used

GCP: track 1 Dax B
Track 1 : Dax B Warning Time = 25 sec
Track 1 : Dax B Offset Distance = 1087 ft
Track 1 : Pickup Delay Mode = Auto
Track 1 : Dax B Pickup Delay = 30 sec
Track 1 : Dax B Enable = Not Used

GCP: track 1 Dax C
Track 1 : Dax C Warning Time = 25 sec
Track 1 : Dax C Offset Distance = 1684 ft
Track 1 : Pickup Delay Mode = Auto
Track 1 : Dax C Pickup Delay = 30 sec
Track 1 : Dax C Enable = Not Used

GCP: track 1 low EZ detect
Track 1 : Low EZ Detection Used = No
Track 1 : Positive Start = Off
Track 1 : Enhanced Detectn Used = Yes
Track 1 : Station Stop Timer = 10 sec
Track 1 : False Activate Level = Normal
Track 1 : Poor Shunting Level = 2

GCP: track 1 WS Control
Track 1 : WS/GCP Ctrl IP Used = No
Track 1 : WS Sensitivity Level = 0
Track 1 : Compensation Level = 1300
Track 1 : Low EX Adjustment = 39
Track 1 : Bidirn Dax Passthru = No

GCP: track 2
Track 2 : GCP Freq Category = Standard
Track 2 : GCP Frequency = 970 Hz
Track 2 : Approach Distance = 597 ft
Track 2 : Uni/Bi/Sim-Bidirni = Unidirni
Track 2 : GCP Transmit Level = High
Track 2 : Island Connection = Isl1
Track 2 : Island Distance = 0 ft
Track 2 : Computed Distance = 9999 ft
Track 2 : Linearization Steps = 100

GCP: track 2 prime
Track 2 : Prime Warning Time = 25 sec
Track 2 : Prime Offset Distance = 0 ft
Track 2 : Switch WS EZ Level = 0
Track 2 : Prime WS/GCP Mode = Pred
Track 2 : Prime Pickup Delay = 30 sec
Track 2 : Prime UAX = IP
Track 2 : Prime UAX Pickup = 5 sec

GCP: track 2 Dax A
Track 2 : Dax A Warning Time = 25 sec
Track 2 : Dax A Offset Distance = 424 ft
Track 2 : Pickup Delay Mode = Auto
Track 2 : Dax A Pickup Delay = 30 sec
Track 2 : Dax A Enable = IP
Track 2 : Dax A Enable Pickup = 2 sec

GCP: track 2 Dax B
Track 2 : Dax B Warning Time = 25 sec
Track 2 : Dax B Offset Distance = 1206 ft
Track 2 : Pickup Delay Mode = Auto
Track 2 : Dax B Pickup Delay = 30 sec
Track 2 : Dax B Enable = IP
Track 2 : Dax B Enable Pickup = 2 sec

GCP: track 2 low EZ detect
Track 2 : Low EZ Detection Used = No
Track 2 : Positive Start = Off
Track 2 : Enhanced Detectn Used = Yes
Track 2 : Station Stop Timer = 10 sec
Track 2 : False Activate Level = Normal
Track 2 : Poor Shunting Level = 2

GCP: track 2 WS Control
Track 2 : WS/GCP Ctrl IP Used = No
Track 2 : WS Sensitivity Level = 0
Track 2 : Compensation Level = 1300
Track 2 : Low EX Adjustment = 39
Track 2 : Bidirn Dax Passthru = No

ISLAND: track 1
Track 1 : Isl Frequency = 11.5 kHz
Track 1 : Pickup Delay (2s +) = 0 sec

AND: track And ing
AND 1 XR Used = Yes
AND 2 Used = No
AND 3 Used = No
AND 4 Used = No
AND 5 Used = No
AND 6 Used = No
AND 7 Used = No
AND 8 Used = No

AND: AND 1 XR
AND 1 XR Track 1 = Prime
AND 1 XR Track 2 = Prime
AND 1 XR Track 3 = Not Used
AND 1 Enable Used = Yes
And 1 Enable Pickup = 5 sec
AND 1 Enable Drop = 0 sec
AND 1 Wrap Used = No

ADVANCED: WS restart
WS/GCP Restart Used = No

ADVANCED: out of service
OOS Control = Display
OOS Timeout = Yes
OOS Timeout = 1 hrs

ADVANCED: track wrap circuits
Wrap LOS Timer = 5 sec
Track 1 Wrap Used = No
Track 2 Wrap Used = No
Track 3 Wrap Used = No

ADVANCED: trk 1 overrides
Track 1 : All Predictors Override Used = No
Track 1 : Dax A Override Used = No
Track 1 : Dax B Override Used = No
Track 1 : Dax C Override Used = No

ADVANCED: trk 2 overrides
Track 2 : All Predictors Override Used = No
Track 2 : Dax A Override Used = No
Track 2 : Dax B Override Used = No

ADVANCED: OR logic
OR 1 Used = No
OR 2 Used = No
OR 3 Used = No
OR 4 Used = No

ADVANCED: Internal I/O 1
Pass Thrus = No
Int. 1 Sets = Not Used
Int. 1 Set by = Not Used
Int. 2 Sets = Not Used
Int. 2 Set by = Not Used
Int. 3 Sets = Not Used
Int. 3 Set by = Not Used
Int. 4 Sets = Not Used
Int. 4 Set by = Not Used

ADVANCED: Internal I/O 2
Int. 5 Sets = Not Used
Int. 5 Set by = Not Used
Int. 6 Sets = Not Used
Int. 6 Set by = Not Used
Int. 7 Sets = Not Used
Int. 7 Set by = Not Used
Int. 8 Sets = Not Used
Int. 8 Set by = Not Used

ADVANCED: site options
Daylight Savings = On
Units = Standard
Ext Maint Call Input = No
Emergency Activate IP = No
EZ/EX Logging = Change
EZ/EX Point Change = 3

SSCC
Gates Used = No
Min Activation = 20 sec
Rmt Activation Cancel = 3 min
Bell On Gate Rising = No
Mute Bell On Gate Down = No
SSCC IV Controller Used = No

SSCC: 1
SSCC-1 Activation = AND 1 XR
SSCC 1 : Flash Rate = 60
SSCC 1 : Low Battery Detection = No
SSCC 1 : Flash Sync = master
SSCC 1 : Invert Gate Output = No
SSCC 1 : Lamp Neutral Test = Off
Aux-1 Xng Ctrl Used = No

SSCC: 2
SSCC-2 Activation = AND 1 XR
SSCC 2 : Flash Rate = 60
SSCC 2 : Low Battery Detection = No
SSCC 2 : Flash Sync = slave
SSCC 2 : Invert Gate Output = No
SSCC 2 : Lamp Neutral Test = Off
Aux-2 Xng Ctrl Used = No

OUTPUT: assignment page 1
OUT 1.1 = T1 Dax A
OUT 1.2 = Not Used
OUT 2.1 = T2 Dax A
OUT 2.2 = T2 Dax B
OUT 3.1 = T1 Dax B
OUT 3.2 = T1 Dax C

INPUT: assignment page 1
IN 1.1 = T2 Prime UAX
IN 1.2 = Not Used
IN 2.1 = T2 Dax A Enable
IN 2.2 = T2 Dax B Enable
IN 3.1 = Not Used
IN 3.2 = Not Used

IO: assignment SSCC
OUT GC 1 = Gate Output 1
OUT GC 2 = Gate Output 2
IN 7.1 = AND 1 XR Enable
IN 7.2 = Not Used
IN 7.3 = Not Used
IN 7.4 = Not Used
IN 7.5 = Not Used
IN 8.1 = Not Used
IN 8.2 = Not Used
IN 8.3 = Not Used
IN 8.4 = Not Used
IN 8.5 = Not Used

SEAR
SEAR Subnode = 99
DI 1 = Not Used
DI 2 = Not Used
Rly 1 = Not Used
Rly 2 = Not Used

SEAR: Inputs
SP 2.1 = Not Used
SP 3.1 = Not Used
SP 4.1 = Not Used
SP 5.1 = Not Used
SP 6.1 = Not Used

SEAR: slot 1-4 inputs
IN 1.2 = Not Used
IN 3.1 = Not Used
IN 3.2 = Not Used
IN 4.1 = Not Used
IN 4.2 = Not Used

SEAR: inputs slot 5
IN 5.1 = Not Used
IN 5.2 = Not Used

SEAR: inputs slot 6
IN 6.1 = Not Used
IN 6.2 = Not Used

SEAR: slot 7-8 inputs
IN 7.2 = Not Used
IN 7.3 = Not Used
IN 7.4 = Not Used
IN 7.5 = Not Used
IN 8.1 = Not Used
IN 8.2 = Not Used
IN 8.3 = Not Used
IN 8.4 = Not Used
IN 8.5 = Not Used

SITE: programming
Radio Subnode = 1
Password Access = Off
Low Battery Enabled = Off

Configuration Package File

Filename: 292766L (PICA10129).pac

* INDICATES TRACK WITH ISLAND

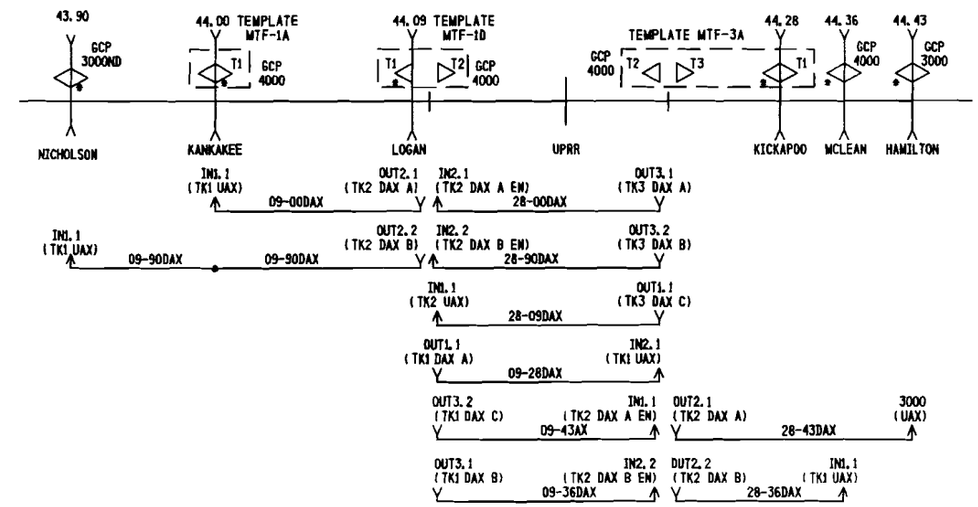

NOTES:

1) DISTANCE(S) TO BE VERIFIED AT INSTALLATION.
INDICATE SELECTED PROGRAMMED VALUE IF DIFFERENT THAN SHOWN.
REFER TO 4000 GCP INSTRUCTION/INSTALLATION MANUAL
FOR PROGRAMMING PARAMETERS.

2) PROGRAM TEXT HIGHLITED IN RED INDICATES 4000 PROGRAM
MODIFICATIONS TO DEFAULT PROGRAM VALUES.

3) EACH CONSTANT WARNING DEVICE SYSTEM TO BE PROGRAMMED TO
CONVERT TO A MOTION SENSOR 300 FEET FROM EDGE OF ROAD
TRAVELLED WAY.
SHUNT TRACK 300 FEET FROM EDGE OF ROAD TRAVELLED WAY
AND NOTE "EZ" VALUE.
PROGRAM EACH SYSTEM WITH THE INDICATED "EZ" VALUE +2.

4) VERIFY SET TIMER VALUE TO MATCH ACTUAL TRAIN MOVEMENT
WITHIN THE CROSSING APPROACH CIRCUITS.

PROPOSED
DES. No. _____
RED-IN YELLOW-OUT
AS INSTALLED
DATE _____
BY _____

41" HIGH CASE

PROPOSED D	M	Y	REVISIONS	D	C	COMPLETED D	M	Y	C

DIVISION MIDWEST
SUB. PEORIA
SD. 1047 C
MP. 44.05 TO 44.15

SIGNALS AND COMMUNICATIONS EDMONTON, ALBERTA — DES. RLC
23 MARCH 2007 — CH. PWW

FLASHER LIGHT CIRCUITS
SIGNAL "A" AND "B"
LOGAN STREET
LINCOLN, IL

M 04405C11

SAFETRAN SYSTEM CORP.
LOUISVILLE DIVISION, LOUISVILLE, KY

SAFETRAN SYSTEMS CORPORATION

DES. : RLC	DATE: 03/232/0	JOB NO. : PICA10102	
CKD. : PWW	ISSUE DATE: N/A	EST. NO. :	
DRN. : RLC	PLAN NO. : N/A	SHEET N/A OF N/A	
P TIME: 13:07	P DATE: 05-FEB-2008	CAD ID. : 04405C11	

NO.	DATE	BY	DESCRIPTION	APP. BY
1				
2				
3				
4				
5				

REVISIONS

Program Report

Location and SIN

DOT Number: 292767T
Milepost Number: 44.28
Site Name: KICKAPOO STREET

SIN: 762010010016

MCF and Template Selection

MCF Name: GCP-T6X-01-2.mcf
MCF Revision: 012
MCFCRC: 0DFE7ADC

Template = 3A:4 BI, Rem pair

Program

BASIC: module configuration
Track 1 Slot = Track
Track 2/RIO 1 Slot = Track
Track 3 Slot = Track
Track 4 Slot = Not Used
Track 5/RIO 2 Slot = Not Used
Track 6/RIO 3 Slot = Not Used
SSCC-1 Slot = SSCC31
SSCC-2 Slot = SSCC31
SEAR Used = Yes

BASIC: MS/GCP operation

Track 1 : MS/GCP Operation = Yes
Track 2 : MS/GCP Operation = Yes
Track 3 : MS/GCP Operation = Yes

BASIC: Island operation
Track 1 : Island Used = Internal
Track 2 : Island Used = No
Track 3 : Island Used = No

BASIC: preemption
Preempt Logic = No

BASIC: radio Dax links
Radio DAX link A Used = No
Radio DAX link B Used = No

BASIC: Vital Comms links
Vital Comms link 1 Used = No
Vital Comms link 2 Used = No

PREDICTORS: track 1
Track 1 : Prime Used = Yes
Track 1 : Dax A Used = No
Track 1 : Dax B Used = No
Track 1 : Dax C Used = No
Track 1 : Dax D Used = No
Track 1 : Dax E Used = No
Track 1 : Dax F Used = No
Track 1 : Dax G Used = No

PREDICTORS: track 2
Track 2 : Prime Used = Yes
Track 2 : Dax A Used = Yes
Track 2 : Dax B Used = Yes
Track 2 : Dax C Used = No
Track 2 : Dax D Used = No
Track 2 : Dax E Used = No
Track 2 : Dax F Used = No
Track 2 : Dax G Used = No

PREDICTORS: track 3
Track 3 : Prime Used = No
Track 3 : Dax A Used = Yes
Track 3 : Dax B Used = Yes
Track 3 : Dax C Used = Yes
Track 3 : Dax D Used = No
Track 3 : Dax E Used = No
Track 3 : Dax F Used = No
Track 3 : Dax G Used = No

GCP: track 1
Track 1 : GCP Freq Category = Standard
Track 1 : GCP Frequency = 211 Hz
Track 1 : Approach Distance = 2010 ft
Track 1 : Uni/Bi/Sim-Bidirni = Bidirni
Track 1 : GCP Transmit Level = High
Track 1 : Island Connection = Isli
Track 1 : Island Distance = 120 ft
Track 1 : Computed Distance = 9999 ft
Track 1 : Linearization Steps = 100

GCP: track 1 prime
Track 1 : Prime Warning Time = 25 sec
Track 1 : Prime Offset Distance = 0 ft
Track 1 : Switch MS EZ Level = 0
Track 1 : Prime MS/GCP Mode = Pred
Track 1 : Prime Pickup Delay = 30 sec
Track 1 : Prime UAX = Not Used

GCP: track 1 low EZ detect
Track 1 : Low EZ Detection Used = No
Track 1 : Positive Start = Off
Track 1 : Enhanced Detectn Used = Yes
Track 1 : Station Stop Timer = 10 sec
Track 1 : False Activate Level = Normal
Track 1 : Poor Shunting Level = 2

GCP: track 1 MS Control
Track 1 : MS/GCP Ctrl IP Used = No
Track 1 : MS Sensitivity Level = 0
Track 1 : Compensation Level = 1300
Track 1 : Low EX Adjustment = 39
Track 1 : Bidirn Dax Passthru = No

GCP: track 2
Track 2 : GCP Freq Category = Standard
Track 2 : GCP Frequency = 645 Hz
Track 2 : Approach Distance = 2055 ft
Track 2 : Uni/Bi/Sim-Bidirni = Unidirni
Track 2 : GCP Transmit Level = High
Track 2 : Island Connection = No Islands
Track 2 : Island Distance = 0 ft
Track 2 : Computed Distance = 9999 ft
Track 2 : Linearization Steps = 100

GCP: track 2 prime
Track 2 : Prime Warning Time = 25 sec
Track 2 : Prime Offset Distance = 294 ft
Track 2 : Pickup Delay Mode = Auto
Track 2 : Prime Pickup Delay = 30 sec
Track 2 : Prime UAX = IP
Track 2 : Prime UAX Pickup = 5 sec

GCP: track 2 Dax A
Track 2 : Dax A Warning Time = 25 sec
Track 2 : Dax A Offset Distance = 1087 ft
Track 2 : Pickup Delay Mode = Auto
Track 2 : Dax A Pickup Delay = 30 sec
Track 2 : Dax A Enable = IP
Track 2 : Dax A Enable Pickup = 2 sec

GCP: track 2 Dax B
Track 2 : Dax B Warning Time = 25 sec
Track 2 : Dax B Offset Distance = 690 ft
Track 2 : Pickup Delay Mode = Auto
Track 2 : Dax B Pickup Delay = 30 sec
Track 2 : Dax B Enable = IP
Track 2 : Dax B Enable Pickup = 2 sec

GCP: track 2 low EZ detect
Track 2 : Low EZ Detection Used = No
Track 2 : Positive Start = Off
Track 2 : Enhanced Detectn Used = Yes
Track 2 : Station Stop Timer = 10 sec
Track 2 : False Activate Level = Normal
Track 2 : Poor Shunting Level = 2

GCP: track 2 MS Control
Track 2 : MS/GCP Ctrl IP Used = No
Track 2 : MS Sensitivity Level = 0
Track 2 : Compensation Level = 1300
Track 2 : Low EX Adjustment = 39
Track 2 : Bidirn Dax Passthru = No

GCP: track 3
Track 3 : GCP Freq Category = Standard
Track 3 : GCP Frequency = 86 Hz
Track 3 : Approach Distance = 1458 ft
Track 3 : Uni/Bi/Sim-Bidirni = Unidirni
Track 3 : GCP Transmit Level = High
Track 3 : Island Connection = No Islands
Track 3 : Island Distance = 0 ft
Track 3 : Computed Distance = 9999 ft
Track 3 : Linearization Steps = 100

GCP: track 3 Dax A
Track 3 : Dax A Warning Time = 25 sec
Track 3 : Dax A Offset Distance = 1021 ft
Track 3 : Pickup Delay Mode = Auto
Track 3 : Dax A Pickup Delay = 30 sec
Track 3 : Dax A Enable = Not Used

GCP: track 3 Dax B
Track 3 : Dax B Warning Time = 25 sec
Track 3 : Dax B Offset Distance = 1803 ft
Track 3 : Pickup Delay Mode = Auto
Track 3 : Dax B Pickup Delay = 30 sec
Track 3 : Dex B Enable = Not Used

GCP: track 3 Dax C
Track 3 : Dax C Warning Time = 25 sec
Track 3 : Dax C Offset Distance = 633 ft
Track 3 : Pickup Delay Mode = Auto
Track 3 : Dax C Pickup Delay = 30 sec
Track 3 : Dax C Enable = Not Used

GCP: track 3 low EZ detect
Track 3 : Low EZ Detection Used = No
Track 3 : Positive Start = Off
Track 3 : Enhanced Detectn Used = Yes
Track 3 : Station Stop Timer = 10 sec
Track 3 : False Activate Level = Normal
Track 3 : Poor Shunting Level = 2

GCP: track 3 MS Control
Track 3 : MS/GCP Ctrl IP Used = No
Track 3 : MS Sensitivity Level = 0
Track 3 : Compensation Level = 1300
Track 3 : Low EX Adjustment = 39
Track 3 : Bidirn Dax Passthru = No

ISLAND: track 1
Track 1 : Isl Frequency = 7.1 kHz
Track 1 : Pickup Delay (2s +) = 0 sec

AND: track Anding
AND 1 XR Used = Yes
AND 2 Used = No
AND 3 Used = No
AND 4 Used = No
AND 5 Used = No
AND 6 Used = No
AND 7 Used = No
AND 8 Used = No

AND: AND 1 XR
AND 1 XR Track 1 = Prime
AND 1 XR Track 2 = Prime
AND 1 XR Track 3 = Not Used
AND 1 Enable Used = Yes
And 1 Enable Pickup = 5 sec
AND 1 Enable Drop = 0 sec
AND 1 Wrap Used = No

ADVANCED: MS restart
MS/GCP Restart Used = No

ADVANCED: out of service
OOS Control = Display
OOS Timeout = Yes
OOS Timeout = 1 hrs

ADVANCED: track wrap circuits
Wrap LOS Timer = 5 sec
Track 1 Wrap Used = No
Track 2 Wrap Used = No
Track 3 Wrap Used = No

ADVANCED: trk 1 overrides
Track 1 : All Predictors Override Used = No

ADVANCED: trk 2 overrides
Track 2 : All Predictors Override Used = No
Track 2 : Dax A Override Used = No
Track 2 : Dax B Override Used = No

ADVANCED: trk 3 overrides
Track 3 : All Predictors Override Used = No
Track 3 : Dax A Override Used = No
Track 3 : Dax B Override Used = No

ADVANCED: OR logic
OR 1 Used = No
OR 2 Used = No
OR 3 Used = No
OR 4 Used = No

ADVANCED: Internal I/O 1
Pass Thrus = No
Int. 1 Sets = Not Used
Int. 1 Set by = Not Used
Int. 2 Sets = Not Used
Int. 2 Set by = Not Used
Int. 3 Sets = Not Used
Int. 3 Set by = Not Used
Int. 4 Sets = Not Used
Int. 4 Set by = Not Used

ADVANCED: Internal I/O 2
Int. 5 Sets = Not Used
Int. 5 Set by = Not Used
Int. 6 Sets = Not Used
Int. 6 Set by = Not Used
Int. 7 Sets = Not Used
Int. 7 Set by = Not Used
Int. 8 Sets = Not Used
Int. 8 Set by = Not Used

ADVANCED: site options
Daylight Savings = On
Units = Standard
Ext Maint Call Input = No
Emergency Activate IP = No
EZ/EX Logging = Change
EZ/EX Point Change = 3

SSCC
Gates Used = Yes
SSCC1+2 GPs Coupled = Yes
Min Activation = 20 sec
Rmt Activation Cancel = 3 min
Bell On Gate Rising = No
Mute Bell On Gate Down = No
SSCC IV Controller Used = No

SSCC: 1
SSCC-1 Activation = AND 1 XR
SSCC-1 Gate Delay = 3 sec
SSCC-1 Number of GPs = 1
SSCC-1 Number of GDs = 1
SSCC 1 : Flash Rate = 60
SSCC 1 : Low Battery Detection = No
SSCC 1 : Flash Sync = master
SSCC 1 : Invert Gate Output = No
SSCC 1 : Lamp Neutral Test = Off
Aux-1 Xng Ctrl Used = No

SSCC: 2
SSCC-2 Activation = AND 1 XR
SSCC-2 Gate Delay = 3 sec
SSCC-2 Number of GPs = 0
SSCC-2 Number of GDs = 1
SSCC 2 : Flash Rate = 50
SSCC 2 : Low Battery Detection = No
SSCC 2 : Flash Sync = slave
SSCC 2 : Invert Gate Output = No
SSCC 2 : Lamp Neutral Test = Off
Aux-2 Xng Ctrl Used = No

OUTPUT: assignment page 1
OUT 1.1 = T3 Dax C
OUT 1.2 = Not Used
OUT 2.1 = T2 Dax A
OUT 2.2 = T2 Dax B
OUT 3.1 = T3 Dax A
OUT 3.2 = T3 Dax B

INPUT: assignment page 1
IN 1.1 = T2 Dax A Enable
IN 1.2 = Not Used
IN 2.1 = T2 Prime UAX
IN 2.2 = T2 Dax B Enable
IN 3.1 = Not Used
IN 3.2 = Not Used

IO: assignment SSCC
OUT GC 1 = Gate Output 1
OUT GC 2 = Gate Output 2
IN 7.1 = AND 1 XR Enable
IN 7.2 = Not Used
IN 7.3 = Not Used
IN 7.4 = GD 1.1
IN 7.5 = GP 1.1
IN 8.1 = Not Used
IN 8.2 = Not Used
IN 8.3 = Not Used
IN 8.4 = GD 2.1
IN 8.5 = Not Used

SEAR
SEAR Subnode = 99
DI 1 = Not Used
DI 2 = Not Used
Rly 1 = Not Used
Rly 2 = Not Used

SEAR: Inputs
SP 2.1 = Not Used
SP 3.1 = Not Used
SP 4.1 = Not Used
SP 5.1 = Not Used
SP 6.1 = Not Used

SEAR: slot 1-4 Inputs
IN 1.2 = Not Used
IN 3.1 = Not Used
IN 3.2 = Not Used
IN 4.1 = Not Used
IN 4.2 = Not Used

SEAR: Inputs slot 5
IN 5.1 = Not Used
IN 5.2 = Not Used

SEAR: Inputs slot 6
IN 6.1 = Not Used
IN 6.2 = Not Used

SEAR: slot 7-8 Inputs
IN 7.2 = Not Used
IN 7.3 = Not Used
IN 8.1 = General
IN 8.2 = Not Used
IN 8.3 = Not Used
IN 8.5 = Not Used

SITE: programming
Radio Subnode = 1
Password Access = Off
Low Battery Enabled = Off

Configuration Package File

Filename: 292767T (PICAI0129).pac

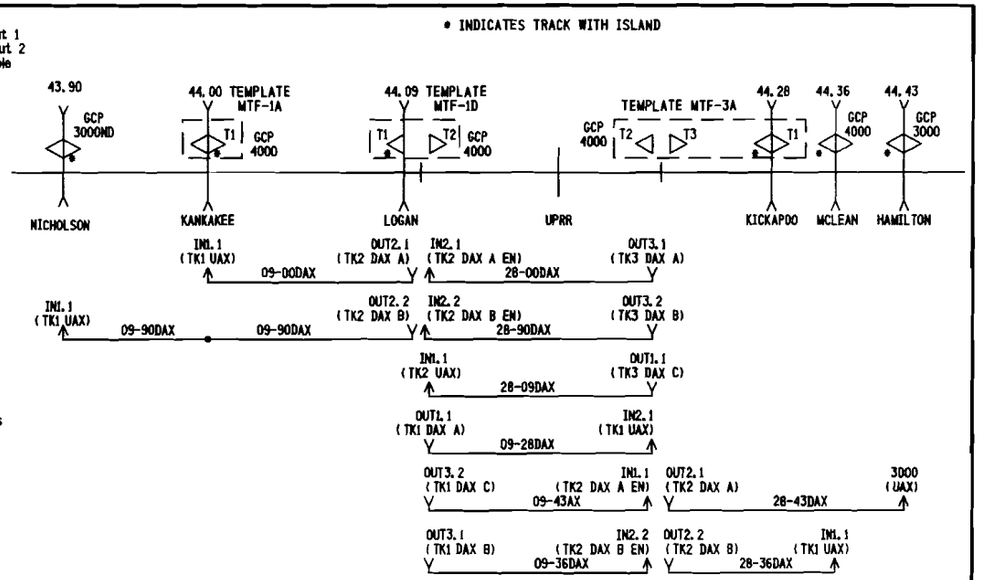

NOTES:

1) DISTANCE(S) TO BE VERIFIED AT INSTALLATION.
INDICATE SELECTED PROGRAMMED VALUE IF DIFFERENT THAN SHOWN.
REFER TO 4000 GCP INSTRUCTION/INSTALLATION MANUAL
FOR PROGRAMMING PARAMETERS.

2) PROGRAM TEXT HIGHLITED IN RED INDICATES 4000 PROGRAM
MODIFICATIONS TO DEFAULT PROGRAM VALUES.

3) EACH CONSTANT WARNING DEVICE SYSTEM TO BE PROGRAMMED TO
CONVERT TO A MOTION SENSOR 300 FEET FROM EDGE OF ROAD
TRAVELLED WAY.
SHUNT TRACK 300 FEET FROM EDGE OF ROAD TRAVELLED WAY
AND NOTE "EZ" VALUE.
PROGRAM EACH SYSTEM WITH THE INDICATED "EZ" VALUE +2.

4) VERIFY SET TIMER VALUE TO MATCH ACTUAL TRAIN MOVEMENT
WITHIN THE CROSSING APPROACH CIRCUITS.

PROPOSED
DES. No. _____
RED-IN YELLOW-OUT
AS INSTALLED
DATE _____
BY _____

6' X 6' HOUSE

PROPOSED D	M	Y	REVISIONS	D	C	COMPLETED D	M	Y	C

DIVISION MIDWEST
SUB. PEORIA
SD. 1047 C
MP. 44.23 TO 44.30

SIGNALS AND COMMUNICATIONS EDMONTON, ALBERTA
DES. RLC
23 MARCH 2007
CH. PWW

GCP 4000 NON REDUNDANT
PROGRAM INFORMATION
KICKAPOO STREET
LINCOLN, IL

M 04423C12

SAFETRAN SYSTEMS CORPORATION
SAFETRAN SYSTEM CORP.
LOUISVILLE DIVISION, LOUISVILLE, KY

DES. : RLC	DATE: 03/23/07	JOB NO. : PICAI0102	
CKD. : PWW	ISSUE DATE: N/A	EST. NO. :	
DRN. : RLC	PLAN NO. : N/A	SHEET N/A OF N/A	
P TIME: 13:04	P DATE: 05-FEB-2008	CAD ID. : 04423C12	

NO.	DATE	BY	DESCRIPTION	APP. BY
1				
2				
3				
4				
5				

REVISIONS

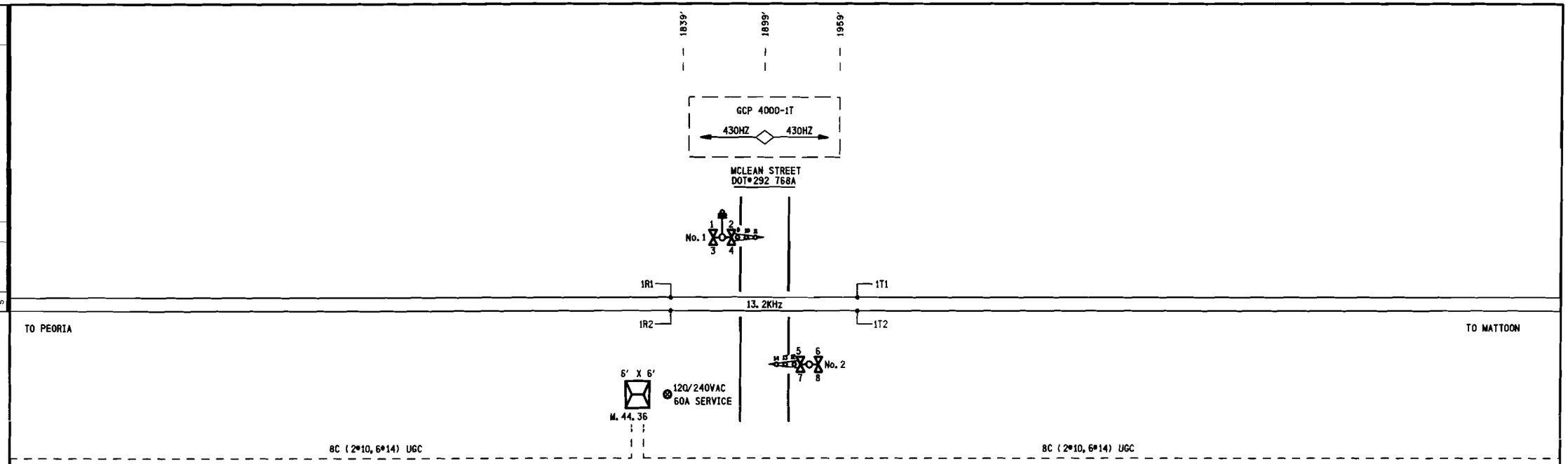

PROJECT DESIGNED BASED
ON KANKAKEE STREET
PLACED IN SERVICE

PROPOSED
DES. No. _____
RED-IN YELLOW-OUT
AS INSTALLED
DATE _____
BY _____

6' X 6' BUNGALOW

PROPOSED D	M	Y	REVISIONS	D	C	COMPLETED D	M	Y	C

DIVISION MIDWEST
SUB. PEORIA
SD. 1047 C
MP. 44.30 TO 44.40

SIGNALS AND COMMUNICATIONS
EDMONTON, ALBERTA

DES. MAB
CH. RLC
04 JANUARY 2008

TRACK LAYOUT
MCLEAN STREET

LINCOLN, IL

M 4436C01

14

SAFETRAN SYSTEM CORP.
LOUISVILLE DIVISION, LOUISVILLE, KY

SAFETRAN SYSTEMS CORPORATION

DES. : MAB	DATE: 01/04/08
CKD. : RLC	ISSUE DATE: N/A
DRN. : MAB	PLAN NO. :N/A
P TIME:13:05	P DATE: 05-FEB-2008
JOB NO. : PICA10129	
EST. NO. :N/A	
SHEET N/A OF N/A	
CAD ID. : 4436C01.DGN	

REVISIONS				
NO.	DATE	BY	DESCRIPTION	APP. BY
1				
2				
3				
4				
5				

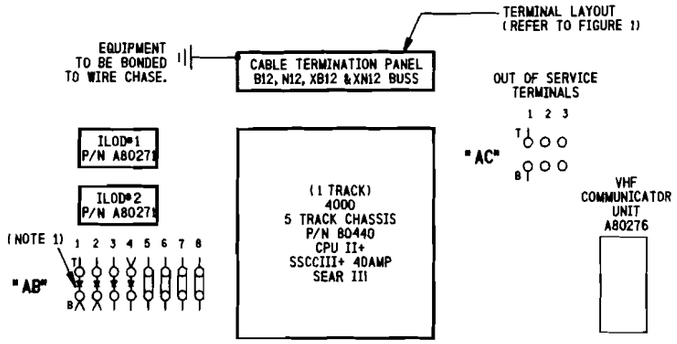

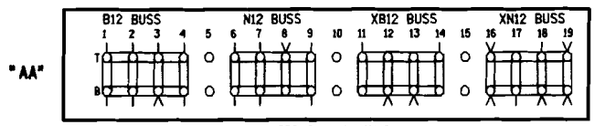

TERMINAL LAYOUT
FIGURE 1

NOTE:
1) ⊣⊢ DENOTES RECTIFIER : (SAFETRAN# 80D8A299006)

SIDE "A"

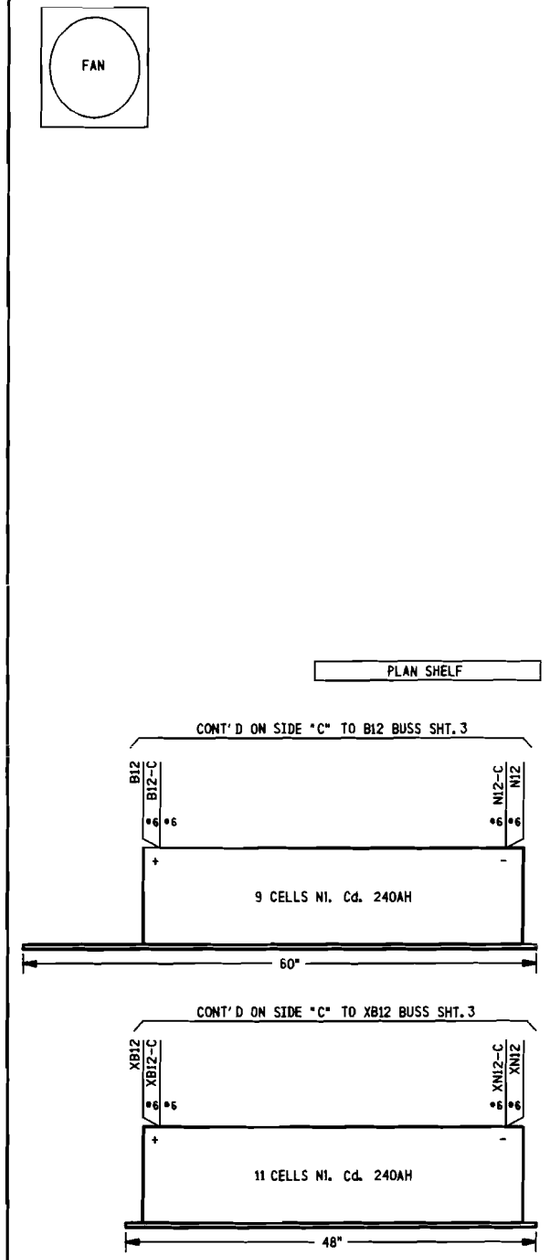

SIDE "B"

PROPOSED
DES. No. _____
RED-IN YELLOW-OUT
AS INSTALLED
DATE _____
BY _____

6' X 6' BUNGALOW

PROPOSED			REVISIONS	D	C	COMPLETED			C
D	M	Y				D	M	Y	

DIVISION MIDWEST
SUB. PEORIA
SD. 1047 C
MP. 44.30 TO 44.40

SIGNALS AND COMMUNICATIONS
EDMONTON, ALBERTA

DES. MAB
CH. RLC

04 JANUARY 2008

BUNGALOW LAYOUT
SIDE "A" & "B"
MCLEAN STREET
LINCOLN, IL

M 4436C02

SAFETRAN SYSTEM CORP.
LOUISVILLE DIVISION, LOUISVILLE, KY

SAFETRAN SYSTEMS CORPORATION

DES. : MAB	DATE: 01/04/08	JOB NO.: PICA10129	
CKD. : RLC	ISSUE DATE: N/A	EST. NO.: N/A	
DRN. : MAB	PLAN NO.: N/A	SHEET N/A OF N/A	
P. TIME: 13:05	P. DATE: 05-FEB-2008	CAD ID.: 4436C02.DGN	

NO.	DATE	BY	DESCRIPTION	APP.	BY
1					
2					
3					
4					
5					

REVISIONS

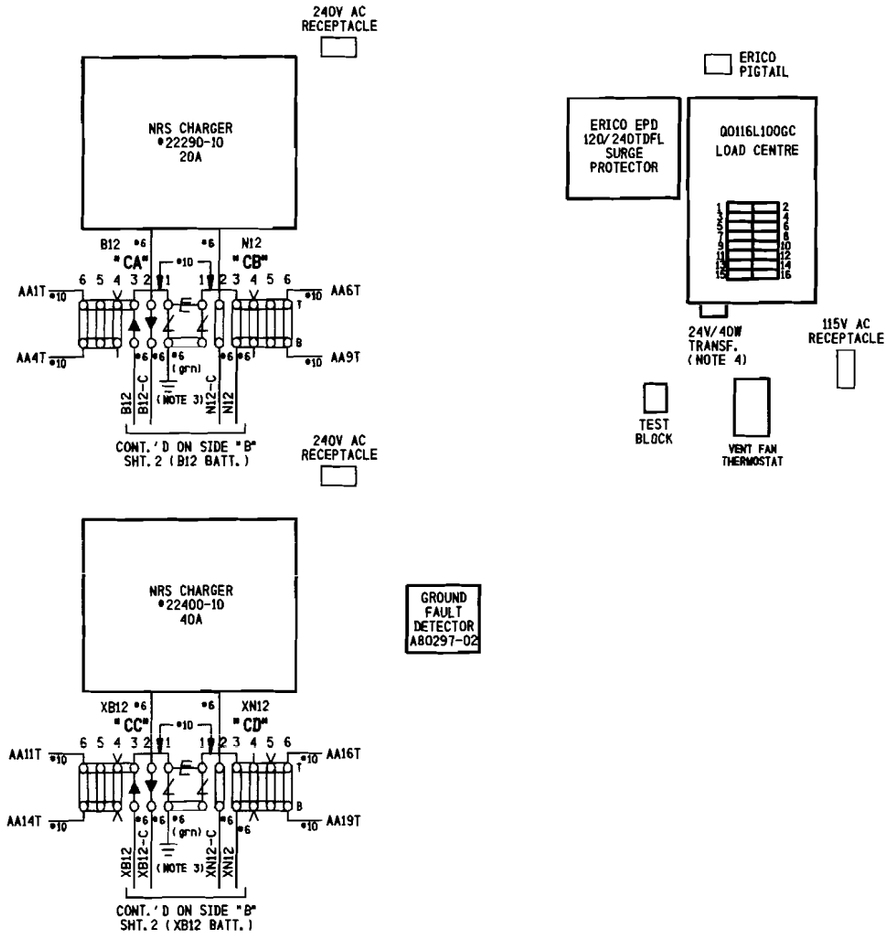

GROUND FAULT DETECTOR A80297-02

NOTES:

1) ⋕ DENOTES EQUALIZER TYPE: (SAFETRAN #022700-1X)
2) ⊼ DENOTES LIGHTNING ARRESTER TYPE: (SAFETRAN #022585-1X)
3) SURGE PROTECTION SHOULD BE BONDED TO BUNGALOW.
4) 24V-40W TRANSFORMER (CN STOCK #02-45-367)

SIDE "C"

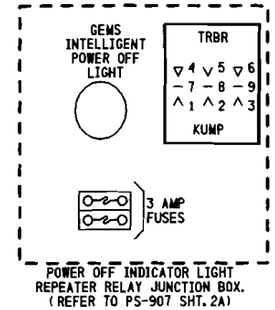

POWER OFF INDICATOR LIGHT REPEATER RELAY JUNCTION BOX. (REFER TO PS-907 SHT. 2A)

SIDE "D"
ABOVE ENTRY DOOR

PROPOSED
DES. No. _____
RED-IN YELLOW-OUT
AS INSTALLED
DATE _____
BY _____

6' X 6' BUNGALOW

PROPOSED D	M	Y	REVISIONS	D	C	COMPLETED D	M	Y	C

DIVISION MIDWEST
SUB. PEORIA
SD. 1047 C
MP. 44.30 TO 44.40

CN

SIGNALS AND COMMUNICATIONS EDMONTON, ALBERTA | DES. MAB
04 JANUARY 2008 | CH. RLC

BUNGALOW LAYOUT
SIDE "C" & OVER DOOR SIDE "D"
MCLEAN STREET
LINCOLN, IL

M 4436C03

SAFETRAN SYSTEM CORP.
LOUISVILLE DIVISION, LOUISVILLE, KY

SAFETRAN SYSTEMS CORPORATION

DES.: MAB	DATE: 01/04/08	JOB NO.: PICA10129	
CKD.: RLC	ISSUE DATE: N/A	EST. NO.: N/A	
DRN.: MAB	PLAN NO.: N/A	SHEET N/A OF N/A	
P TIME: 13:05	P DATE: 05-FEB-2008	CAD ID.: 4436C03.DGN	

NO.	DATE	BY	DESCRIPTION	APP. BY
1				
2				
3				
4				
5				

REVISIONS

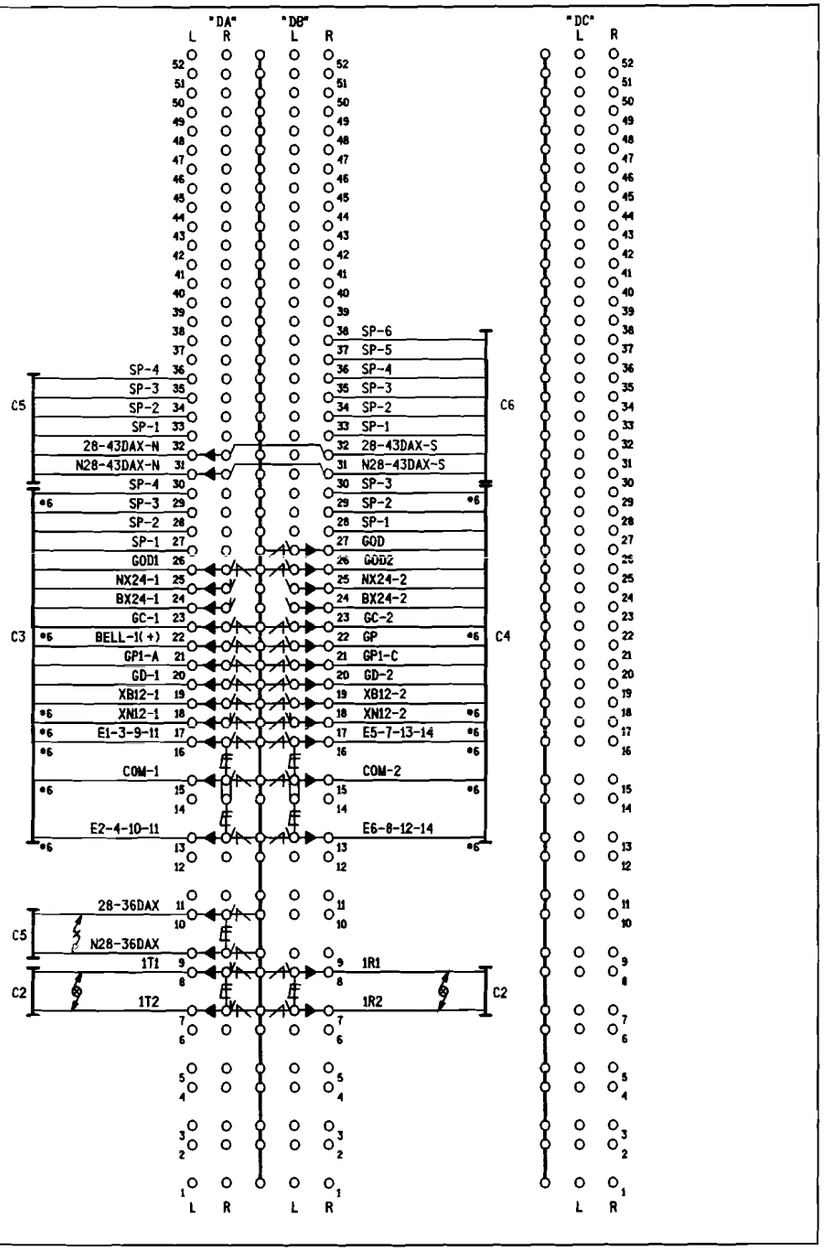

SIDE "D" (INSIDE)

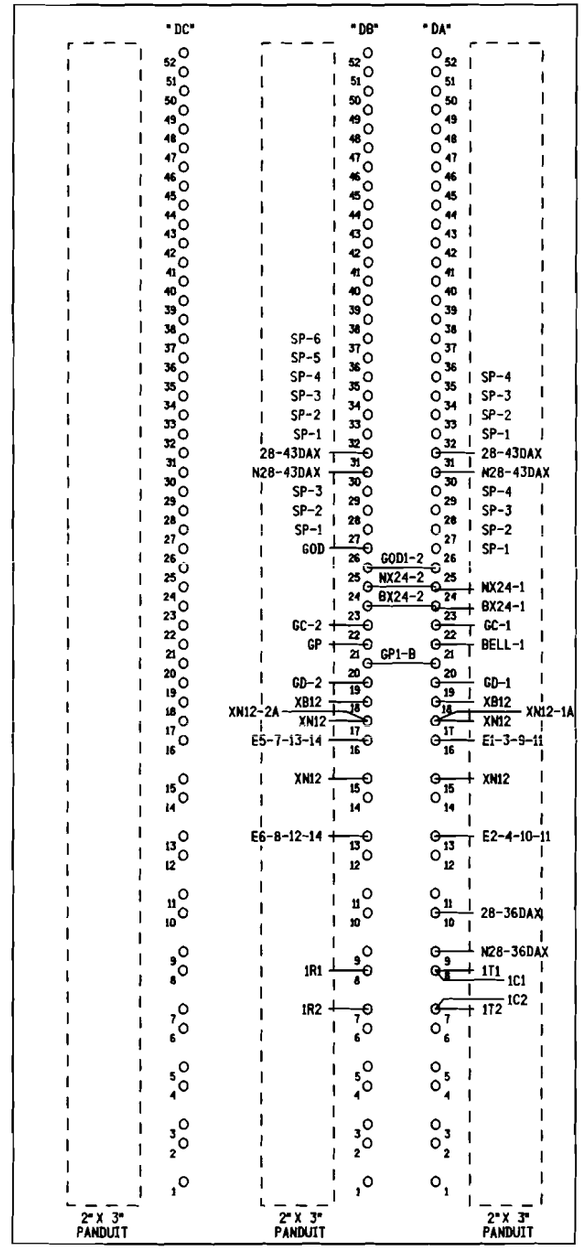

SIDE "D" (OUTSIDE)

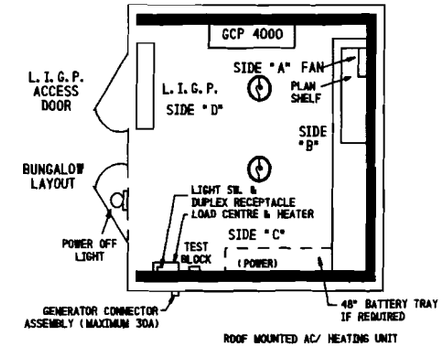

CABLE CONSIST:

C1-3C*6 TECK 90 U/G TO MAIN SERVICE
C2-(2)-2SC*6 TW. TO TRACK
C3-16C (7*6, 9*14) TO GATE (SIG.*1)
C4-16C (7*6, 9*14) TO GATE (SIG.*2)
C5-8C (2*10, 6*14) TO M.P. 44.28
C6-8C (2*10, 6*14) TO M.P. 44.43

NOTES:

1) DENOTES LIGHTNING ARRESTER TYPE:(SAFETRAN *022585-1X)
2) DENOTES EQUALIZER TYPE:(SAFETRAN *022700-1X)
3) DENOTES TWISTED PAIR.
4) ENSURE DOUBLE NUTTING OF ALL TERMINALS.

PROPOSED
DES. No. _____
RED-IN YELLOW-OUT
AS INSTALLED
DATE _____
BY _____

6' X 6' BUNGALOW

PROPOSED D	M	Y	REVISIONS	D	C	COMPLETED D	M	Y	C

DIVISION MIDWEST
SUB. PEORIA
SD. 1047 C
MP. 44.30 TO 44.40

SIGNALS AND COMMUNICATIONS EDMONTON, ALBERTA — DES. MAB
04 JANUARY 2008 — CH. RLC

BUNGALOW LAYOUT SIDE "D"
LOW IMPEDANCE GROUND PLANE
MCLEAN STREET
LINCOLN, IL

M 4436C04

SAFETRAN SYSTEM CORP.
LOUISVILLE DIVISION, LOUISVILLE, KY

SAFETRAN SYSTEMS CORPORATION

DES. : MAB	DATE: 01/04/08	JOB NO.: PJCA10129	
CKD. : RLC	ISSUE DATE: N/A	EST. NO.: N/A	
DRN. : MAB	PLAN NO.: N/A	SHEET N/A OF N/A	
P TIME: 13:05	P DATE: 05-FEB-2008	CAD ID.: 4436C04.DGN	

REVISIONS				
NO.	DATE	BY	DESCRIPTION	APP. BY
1				
2				
3				
4				
5				

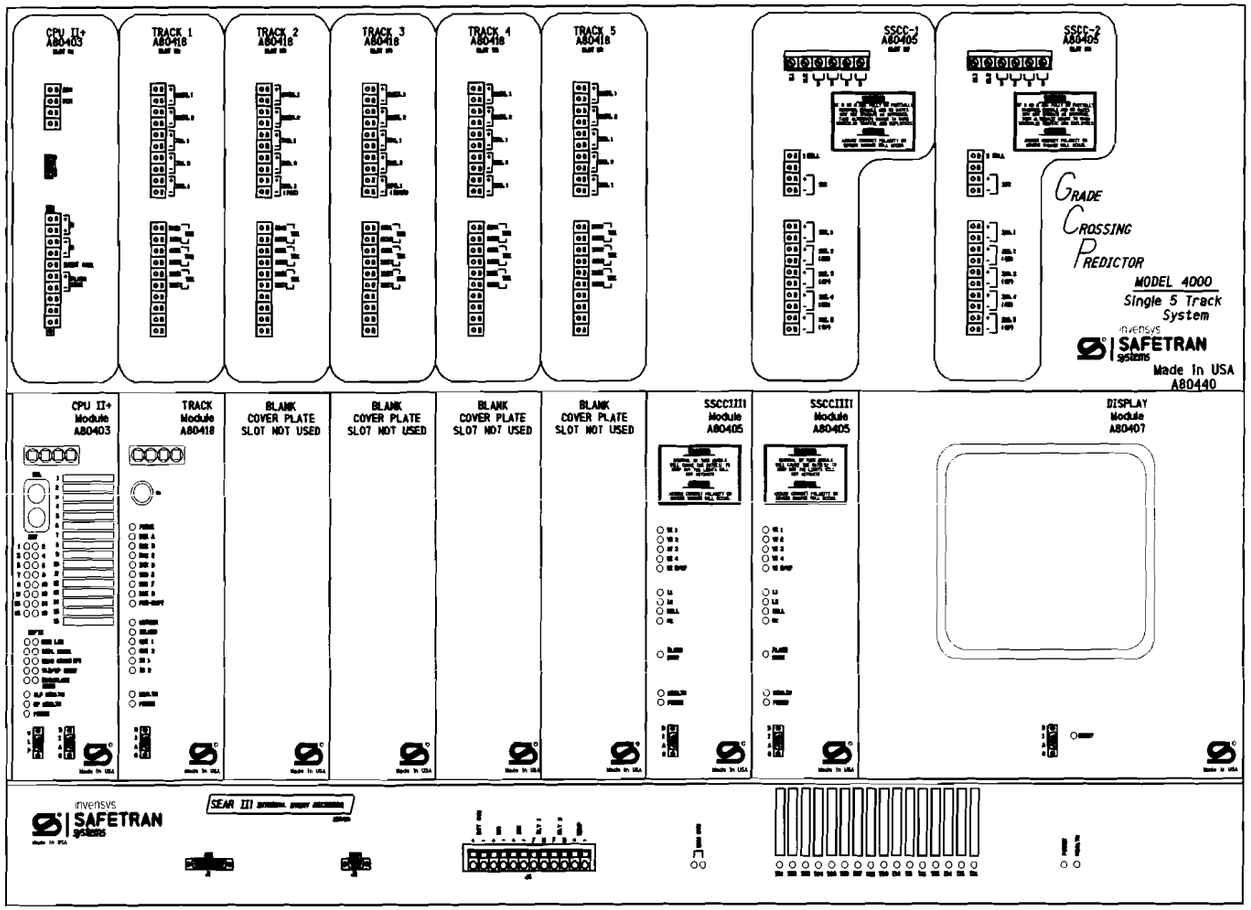

NOTE:

1) DISABLE THE DISPLAY HEATER BY REMOVING JUMPER J-22 (LOCATED AT THE EDGE OF THE DISPLAY MODULE CARD THAT PLUGS INTO THE CHASSIS).

ATTENTION!

ENSURE THE DISPLAY MODULE HEATER IS DISABLED.
LEAVING THE DISPLAY HEATER ENABLE WILL REDUCE THE AMOUNT OF BATTERY STANDBY TIME IN THE EVENT OF AN AC POWER FAILURE.

HEATER FUNCTION IS
JUMPER SELECTABLE ON
THE DISPLAY MODULE BOARD.
THREE OPTIONS ARE AVAILABLE.
NORMAL LCD HTR (DEFAULT)
HI CURRENT
NO JUMPER (HEATER DISABLED)

PICA10129

PROPOSED
DES. No. _____
RED-IN YELLOW-OUT
AS INSTALLED
DATE _____
BY _____

PICA10102

PROPOSED
DES. No. _____
RED-IN YELLOW-OUT
AS INSTALLED
DATE _____
BY _____

6' X 6' BUNGALOW

PROPOSED D	M	Y	REVISIONS	D	C	COMPLETED D	M	Y	C

DIVISION MIDWEST
SUB. PEORIA
SD. 1047 C
MP. 44.30 TO 44.40

SIGNALS AND COMMUNICATIONS EDMONTON, ALBERTA | DES. MAB
04 JANUARY 2008 | CH. RLC

GCP 4000 NON REDUNDANT
5 TRK CHASSIS & MOD. LAYOUT
MCLEAN STREET
LINCOLN, IL

M 4436C05

SAFETRAN SYSTEM CORP.
LOUISVILLE DIVISION, LOUISVILLE, KY

SAFETRAN SYSTEMS CORPORATION

DES. : MAB	DATE: 01/04/08	JOB NO. : PICA10129	
CKD. : RLC	ISSUE DATE: N/A	EST. NO. :N/A	
DRN. : MAB	PLAN NO. :N/A	SHEET N/A OF N/A	
P TIME:13:05	P DATE: 05-FEB-2008	CAD ID. : 4436C05.DGN	

NO.	DATE	BY	REVISIONS DESCRIPTION	APP. BY
1				
2				
3				
4				
5				

(TRACK NOT USED)

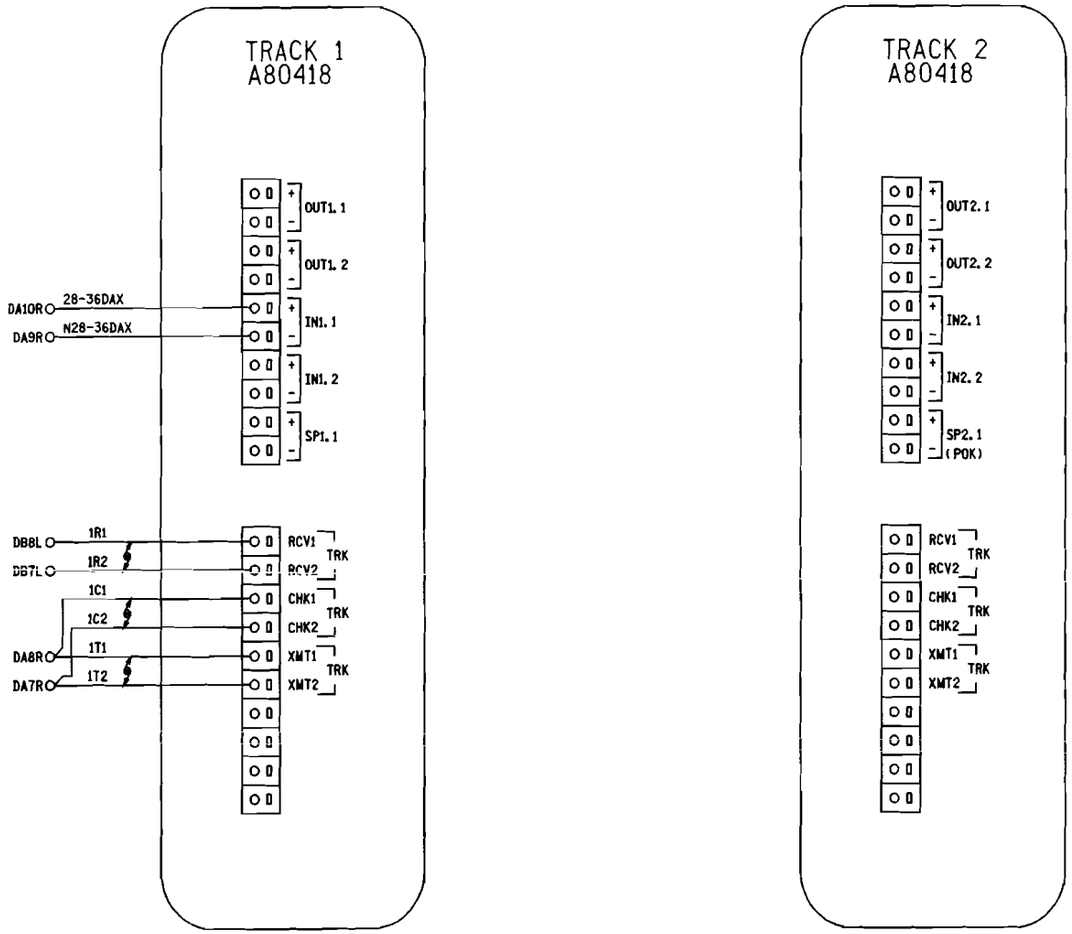

NOTES:

1) ALL WIRING #16 AWG MINIMUM UNLESS OTHERWISE NOTED. WIRE SIZES SHOWN ARE MINIMUM GAUGE.

2) DENOTES TWISTED PAIR.

PROPOSED
DES. No. _____
RED-IN YELLOW-OUT
AS INSTALLED
DATE _____
BY _____

6' X 6' BUNGALOW

PROPOSED D	M	Y	REVISIONS	D	C	COMPLETED D	M	Y	C

DIVISION MIDWEST
SUB. PEORIA
SD. 1047 C
MP. 44.30 TO 44.40

SIGNALS AND COMMUNICATIONS
EDMONTON, ALBERTA

DES. MAB
CH. RLC

04 JANUARY 2008

GCP 4000 NON REDUNDANT
TRACK CONNECTIONS
MCLEAN STREET
LINCOLN, IL

M 4436C06

SAFETRAN SYSTEM CORP.
LOUISVILLE DIVISION, LOUISVILLE, KY

SAFETRAN SYSTEMS CORPORATION

DES. : MAB	DATE: 01/04/08	JOB NO. : PICA10129	
CKD. : RLC	ISSUE DATE: N/A	EST. NO. :N/A	
DRN. : MAB	PLAN NO. :N/A	SHEET N/A OF N/A	
P TIME:13:05	P DATE: 05-FEB-2008	CAD ID. : 4436C06. DGN	

NO.	DATE	BY	REVISIONS DESCRIPTION	APP. BY
1				
2				
3				
4				
5				

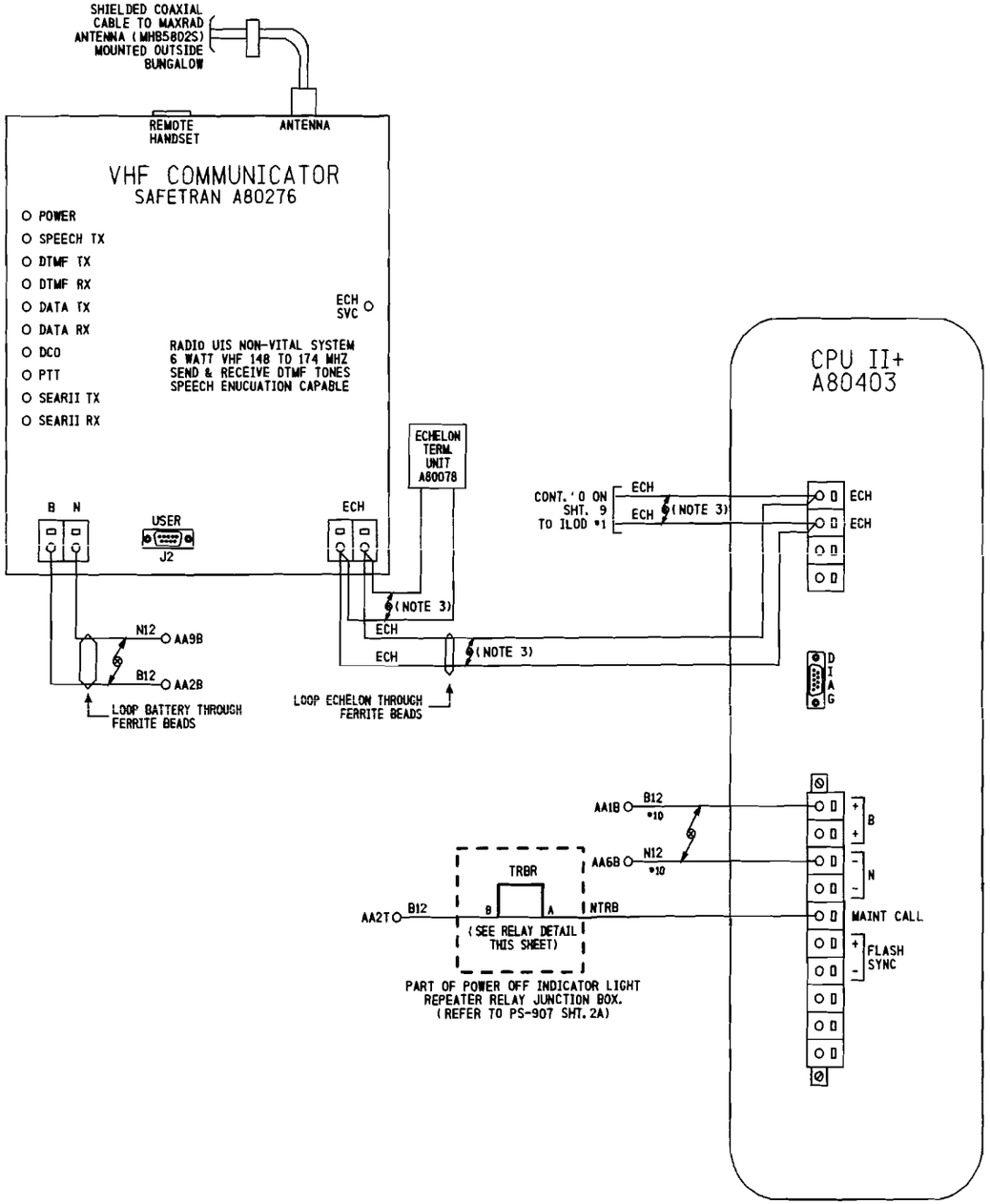

RELAY DETAIL

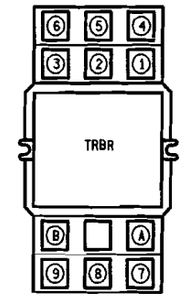

LOCATED OVER ENTRY DOOR

RELAY - POTTER & BRUMFIELD
MODEL KUMP-14D18-12 SOCKET MOUNTABLE
12 VDC W/ 3 FORM C CONTACTS.

SOCKET - SCREW TERMINAL
MODEL 27E121.

RELAY WIRING DIAGRAM (REAR VIEW)

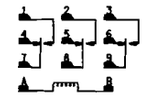

NOTE:
SOCKET NUMBERING CORRESPONDS DIRECTLY WITH RELAY NUMBERING.
(COIL SHOWN ENERGIZED)

NOTES:

1) ALL WIRING #16 AWG UNLESS OTHERWISE NOTED.
2) DENOTES TWISTED PAIR.
3) USE BELDEN CABLE, PART #8461-u500-60 FOR ALL ECHELON AND LAN WIRING.

PROPOSED
DES. No. _____
RED-IN YELLOW-OUT
AS INSTALLED
DATE _____
BY _____

6' X 6' BUNGALOW

PROPOSED D	M	Y	REVISIONS	D	C	COMPLETED D	M	Y	C

DIVISION MIDWEST
SUB. PEORIA
SD. 1047 C
MP. 44.30 TO 44.40

SIGNALS AND COMMUNICATIONS EDMONTON, ALBERTA | DES. MAB
04 JANUARY 2008 | CH. RLC

SAFETRAN INTERNAL EVENT ANALYZER
CPUII+ & VHF COMMUNICATOR
MCLEAN STREET
LINCOLN, IL

M 4436C07

SAFETRAN SYSTEM CORP.
LOUISVILLE DIVISION, LOUISVILLE, KY

SAFETRAN SYSTEMS CORPORATION

DES. : MAB	DATE: 01/04/08	JOB NO. : PICA10129
CKD. : RLC	ISSUE DATE: N/A	EST. NO. :
DRN. : MAB	PLAN NO. :N/A	SHEET N/A OF N/A
P TIME:13:05	P DATE: 05-FEB-2008	CAD ID. : 4436C07.DGN

NO.	DATE	BY	DESCRIPTION	APP. BY
1				
2				
3				
4				
5				

REVISIONS

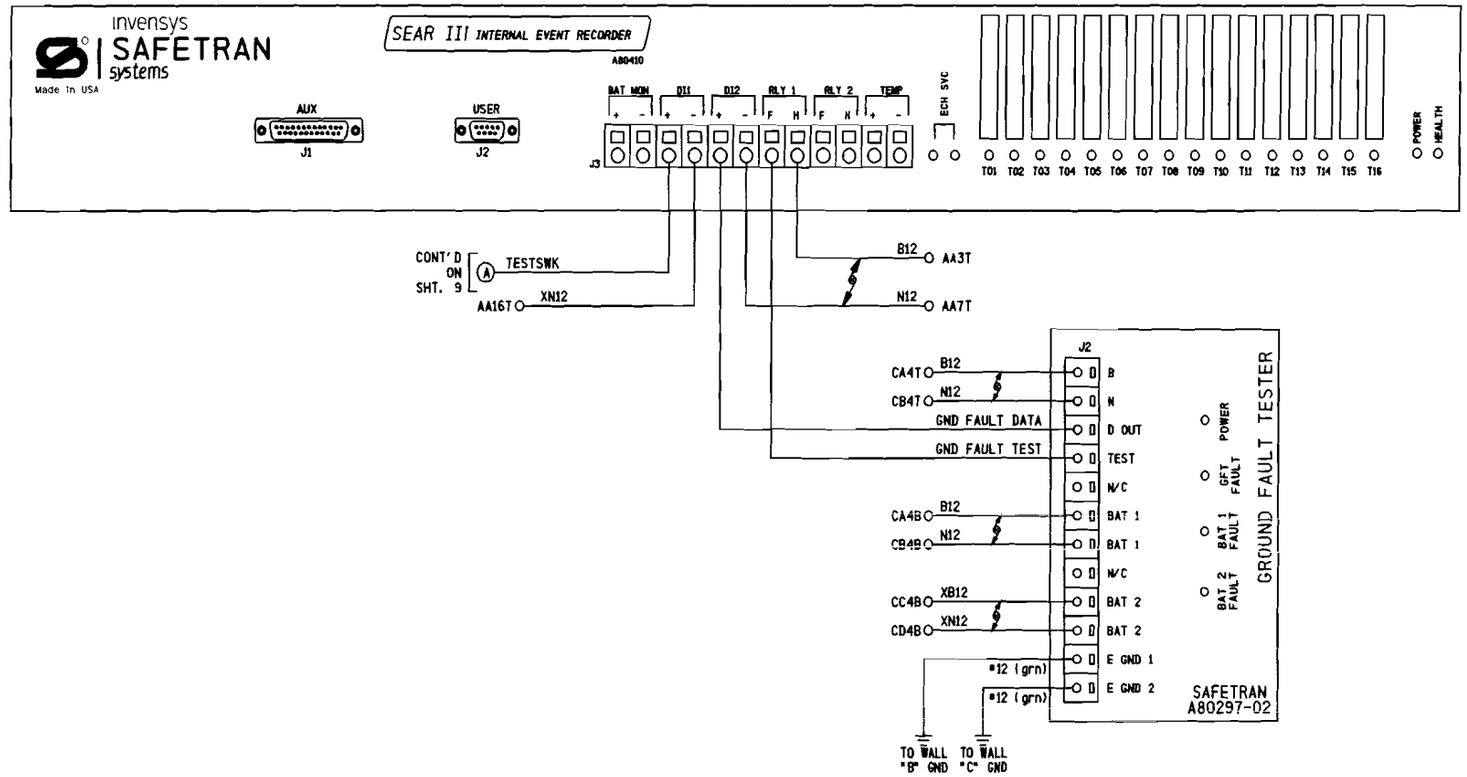

PROPOSED
DES. No. _____
RED-IN YELLOW-OUT

AS INSTALLED
DATE _____
BY _____

6' X 6' BUNGALOW

PROPOSED D	PROPOSED M	PROPOSED Y	REVISIONS	D	C	COMPLETED D	COMPLETED M	COMPLETED Y	C

NOTES:

1) ALL WIRING #16 AWG UNLESS OTHERWISE NOTED.

2) DENOTES TWISTED PAIR.

DIVISION MIDWEST
SUB. PEORIA
SD. 1047 C
MP. 44.30 TO 44.40

SIGNALS AND COMMUNICATIONS
EDMONTON, ALBERTA

DES. MAB
CH. RLC

04 JANUARY 2008

SAFETRAN INTERNAL EVENT ANALYZER
SEARII1 WITH GFT
MCLEAN STREET
LINCOLN, IL

M 4436C08

SAFETRAN SYSTEM CORP.
LOUISVILLE DIVISION, LOUISVILLE, KY

SAFETRAN SYSTEMS CORPORATION

DES. : MAB	DATE: 01/04/08	JOB NO.: PICAI0129	
CKD. : RLC	ISSUE DATE: N/A	EST. NO.:	
DRN. : MAB	PLAN NO.: N/A	SHEET N/A OF N/A	
P TIME:13:05	P DATE: 05-FEB-2008	CAD ID.: 4436C08.DGN	

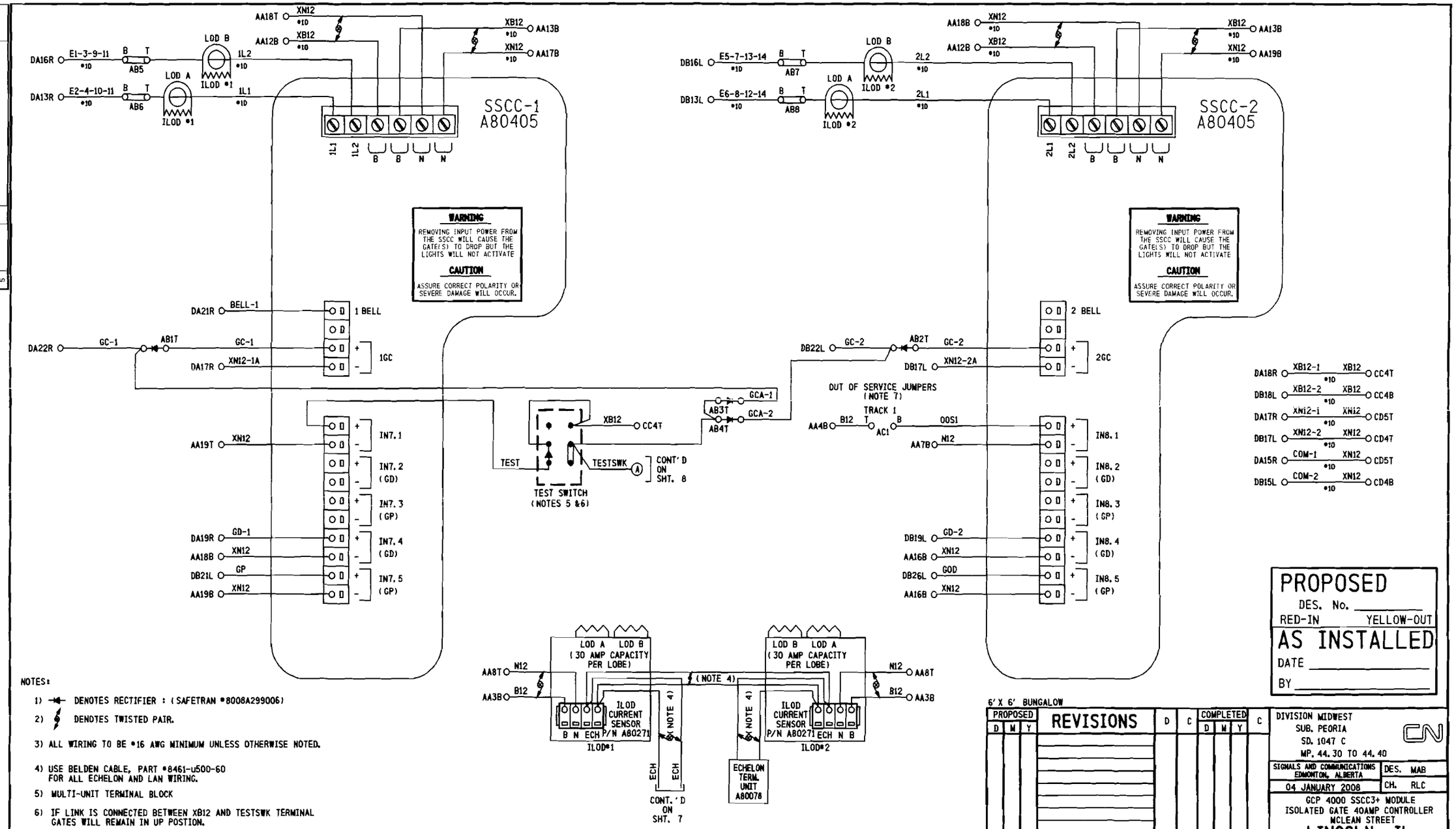

NOTES:

1) DENOTES RECTIFIER : (SAFETRAN #8008A299006)

2) DENOTES TWISTED PAIR.

3) ALL WIRING TO BE #16 AWG MINIMUM UNLESS OTHERWISE NOTED.

4) USE BELDEN CABLE, PART #8461-u500-60 FOR ALL ECHELON AND LAN WIRING.

5) MULTI-UNIT TERMINAL BLOCK

6) IF LINK IS CONNECTED BETWEEN XB12 AND TESTSWK TERMINAL GATES WILL REMAIN IN UP POSTION.

7) TO TAKE TRACK 1 (T1) OUT OF SERVICE, JUMPER AC1T TO AC1B

REVISIONS				
NO.	DATE	BY	DESCRIPTION	APP. BY
1				
2				
3				
4				
5				

SAFETRAN SYSTEMS CORPORATION

DES. : MAB	DATE: 01/04/08	JOB NO. : PTCA10129
CKD. : RLC	ISSUE DATE: N/A	EST. NO. :N/A
DRN. : MAB	PLAN NO. :N/A	SHEET N/A OF N/A
P TIME:13:05	P DATE: 05-FEB-2008	CAD ID. : 4436C09.DGN

PROPOSED
DES. No. _____
RED-IN YELLOW-OUT
AS INSTALLED
DATE _____
BY _____

6' X 6' BUNGALOW

PROPOSED			REVISIONS	D	C	COMPLETED			C
D	M	Y				D	M	Y	

DIVISION MIDWEST
SUB. PEORIA
SD. 1047 C
MP. 44.30 TO 44.40

SIGNALS AND COMMUNICATIONS
EDMONTON, ALBERTA

DES. MAB
CH. RLC

04 JANUARY 2008

GCP 4000 SSCC3+ MODULE
ISOLATED GATE 40AMP CONTROLLER
MCLEAN STREET
LINCOLN, IL

M 4436C09

SAFETRAN SYSTEM CORP.
LOUISVILLE DIVISION, LOUISVILLE, KY

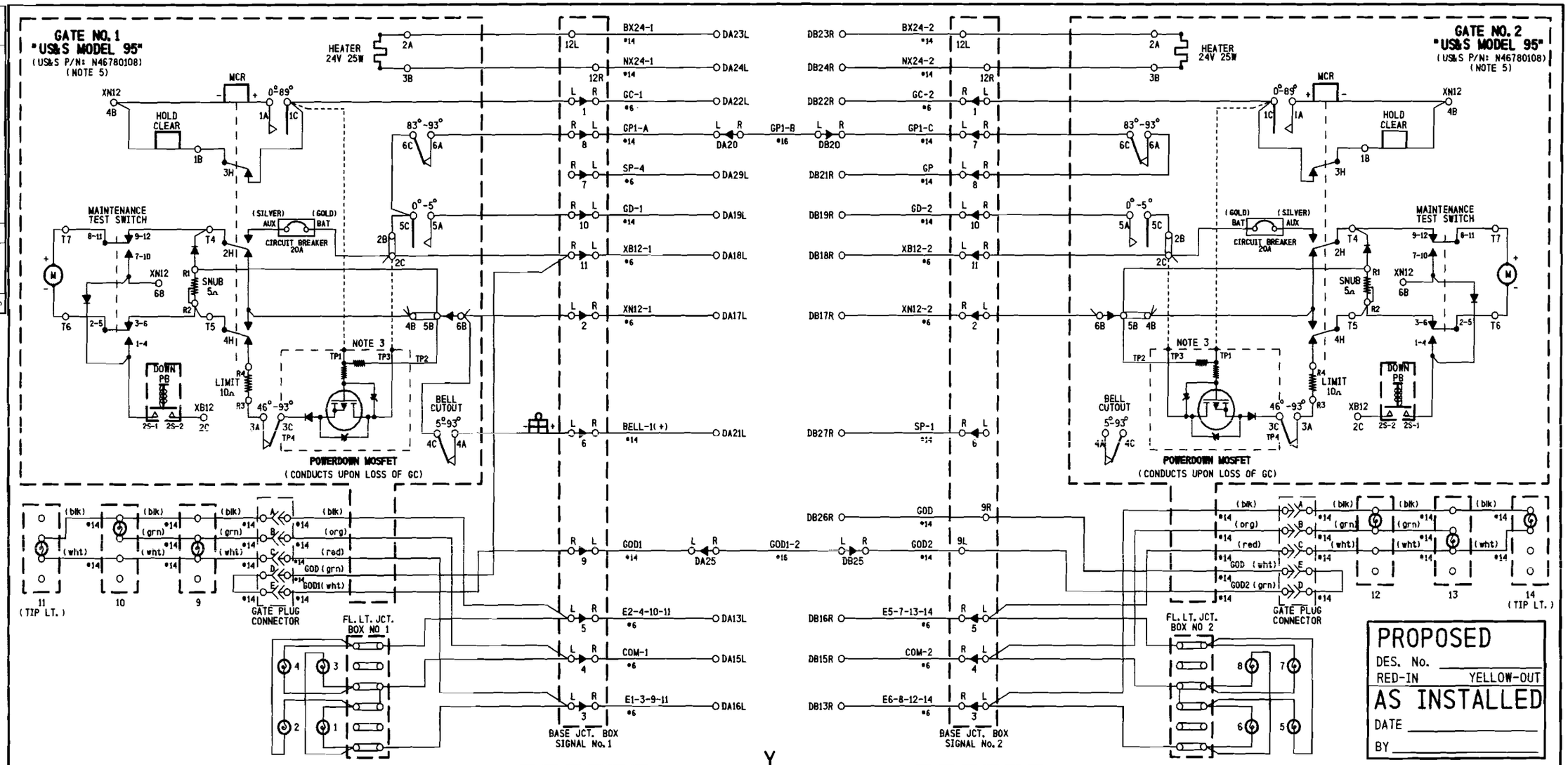

NOTES:

1) ON GATE No. 1 ADD STRAP BETWEEN TERMINAL 2B & 2C ADD JUMPER BETWEEN TERMINAL 2B & 5C AND BETWEEN TERMINAL 5C & 6C.
2) ON GATE No. 2 ADD STRAP BETWEEN TERMINAL 2B & 2C ADD JUMPER BETWEEN TERMINAL 2B & 5C AND CONNECT GP AS SHOWN.
3) POWERDOWN PCB TERMINALS TP1, TP3 & TP4 FIT OVER TERMINALS 1C, 2C & 3C RESPECTIVELY.
4) ALL WIRING #10 AWG MINIMUM UNLESS OTHERWISE NOTED. WIRE SIZES SHOWN ARE MINIMUM GAUGE.
5) GATE DESCENT TIME (RELEASE FROM VERTICAL TO FULLY HORIZONTAL) TO BE WITHIN 11 SECONDS.
6) ENSURE ALL TERMINALS HAVE TWO SHOULDER NUTS.
7) FOR GATE(S) THAT HAS BELL, ADD JUMPER BETWEEN 4C AND 6B.

REVISIONS			
NO.	DATE	BY	DESCRIPTION	APP. BY
1			
2			
3			
4			
5			

SAFETRAN SYSTEMS CORPORATION

DES.: MAB	DATE: 01/04/08	JOB NO.: PICA10129	
CKD.: RLC	ISSUE DATE: N/A	EST. NO. IN/A	
DRN.: MAB	PLAN NO. IN/A	SHEET N/A OF N/A	
P. TIME: 13:05	P. DATE: 05-FEB-2008	CAD ID.: 4436C10.DGN	

PROPOSED
DES. No. _____
RED-IN YELLOW-OUT
AS INSTALLED
DATE _____
BY _____

PROPOSED			REVISIONS	D	C	COMPLETED			C
D	M	Y				D	M	Y	

DIVISION MIDWEST
SUB. PEORIA
SD. 1047 C
MP. 44.30 TO 44.40

SIGNALS AND COMMUNICATIONS EDMONTON, ALBERTA
DES. MAB
04 JANUARY 2008
CH. RLC

GATE MECHANISM CONTROL CIRCUITS

MCLEAN STREET
LINCOLN, IL

M 4436C10

SAFETRAN SYSTEM CORP.
LOUISVILLE DIVISION, LOUISVILLE, KY

NO.	DATE	BY	DESCRIPTION	APP. BY
1				
2				
3				
4				
5				

REVISIONS

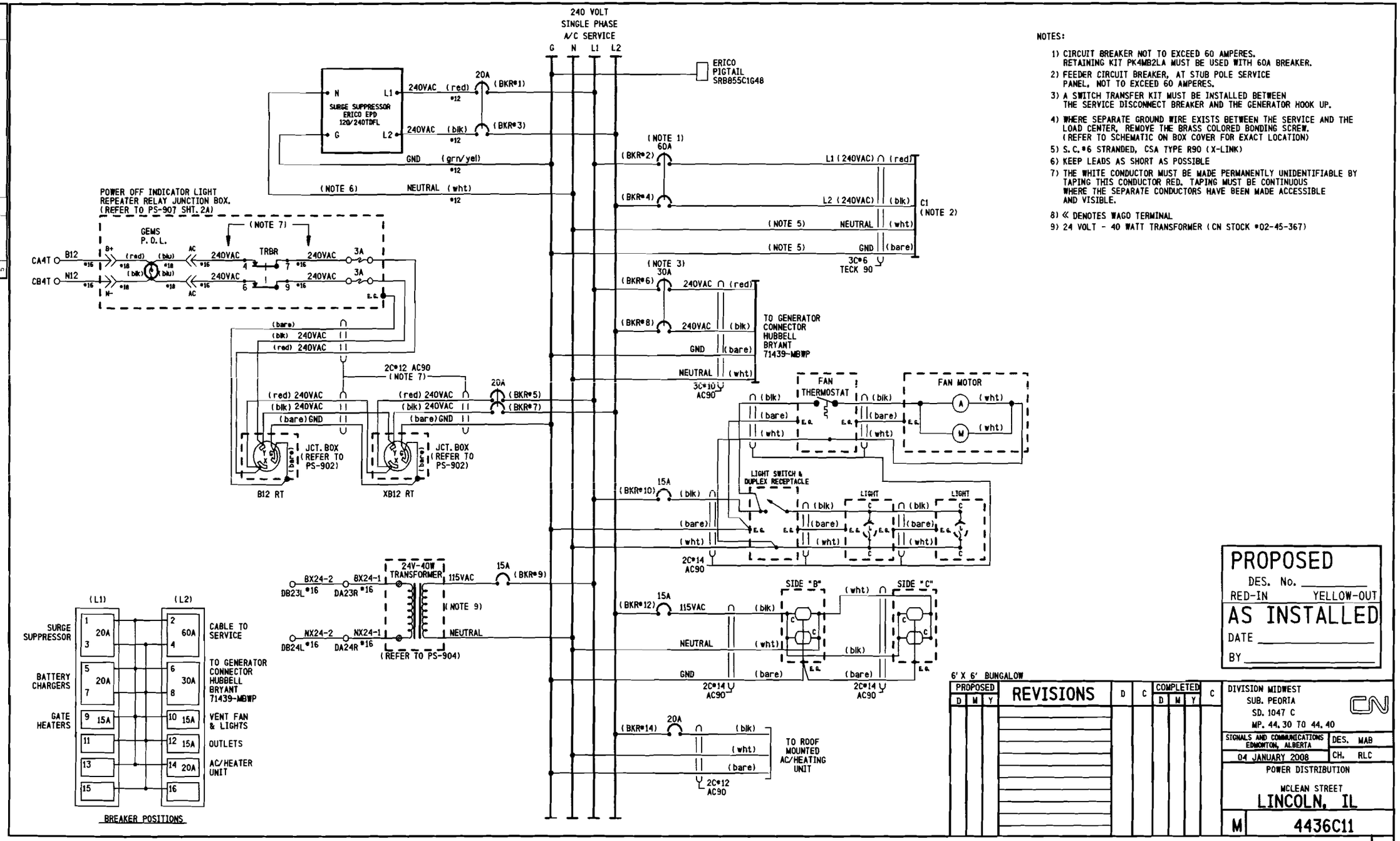

NOTES:

1) CIRCUIT BREAKER NOT TO EXCEED 60 AMPERES. RETAINING KIT PK4MB2LA MUST BE USED WITH 60A BREAKER.
2) FEEDER CIRCUIT BREAKER, AT STUB POLE SERVICE PANEL, NOT TO EXCEED 60 AMPERES.
3) A SWITCH TRANSFER KIT MUST BE INSTALLED BETWEEN THE SERVICE DISCONNECT BREAKER AND THE GENERATOR HOOK UP.
4) WHERE SEPARATE GROUND WIRE EXISTS BETWEEN THE SERVICE AND THE LOAD CENTER, REMOVE THE BRASS COLORED BONDING SCREW. (REFER TO SCHEMATIC ON BOX COVER FOR EXACT LOCATION)
5) S.C.#6 STRANDED, CSA TYPE R90 (X-LINK)
6) KEEP LEADS AS SHORT AS POSSIBLE
7) THE WHITE CONDUCTOR MUST BE MADE PERMANENTLY UNIDENTIFIABLE BY TAPING THIS CONDUCTOR RED. TAPING MUST BE CONTINUOUS WHERE THE SEPARATE CONDUCTORS HAVE BEEN MADE ACCESSIBLE AND VISIBLE.
8) « DENOTES WAGO TERMINAL
9) 24 VOLT - 40 WATT TRANSFORMER (CN STOCK #02-45-367)

PROPOSED
DES. No. _____
RED-IN YELLOW-OUT
AS INSTALLED
DATE _____
BY _____

6' X 6' BUNGALOW

PROPOSED D	M	Y	REVISIONS	D	C	COMPLETED D	M	Y	C

DIVISION MIDWEST
SUB. PEORIA
SD. 1047 C
MP. 44.30 TO 44.40

SIGNALS AND COMMUNICATIONS EDMONTON, ALBERTA — DES. MAB
04 JANUARY 2008 — CH. RLC

POWER DISTRIBUTION
MCLEAN STREET
LINCOLN, IL

M 4436C11

SAFETRAN SYSTEM CORP.
LOUISVILLE DIVISION, LOUISVILLE, KY

SAFETRAN SYSTEMS CORPORATION

DES. : MAB	DATE: 01/04/08	JOB NO.: PICA10129
CKD. : RLC	ISSUE DATE: N/A	EST. NO.: N/A
DRN. : MAB	PLAN NO. : N/A	SHEET N/A OF N/A
P TIME: 13:05	P DATE: 05-FEB-2008	CAD ID.: 4436C11.DGN

NO.	DATE	BY	DESCRIPTION	APP. BY
1				
2				
3				
4				
5				

REVISIONS

Program Report

Location and SIN

DOT Number: 292768A
Milepost Number: 44.36
Site Name: MCLEAN STREET

SIN: 762010010016

MCF and Template Selection

MCF Name: GCP-T6X-01-2.mcf
MCF Revision: 012
MCFCRC: 0DFE7A0C

Template = 1A:6 Trk BI

Program

BASIC: module configuration
Track 1 Slot = Track
Track 2/RIO 1 Slot = Not Used
Track 3 Slot = Not Used
Track 4 Slot = Not Used
Track 5/RIO 2 Slot = Not Used
Track 6/RIO 3 Slot = Not Used
SSCC-1 Slot = SSCC31
SSCC-2 Slot = SSCC31
SEAR Used = Yes

BASIC: MS/GCP operation
Track 1 : MS/GCP Operation = Yes

BASIC: island operation
Track 1 : Island Used = Internal

BASIC: preemption
Preempt Logic = No

BASIC: radio Dax links
Radio DAX link A Used = No
Radio DAX link B Used = No

BASIC: VitalComms links
VitalComms link 1 Used = No
VitalComms link 2 Used = No

PREDICTORS: track 1
Track 1 : Prime Used = Yes
Track 1 : Dax A Used = No
Track 1 : Dax B Used = No
Track 1 : Dax C Used = No
Track 1 : Dax D Used = No
Track 1 : Dax E Used = No
Track 1 : Dax F Used = No
Track 1 : Dax G Used = No

GCP: track 1
Track 1 : GCP Freq Category = Standard
Track 1 : GCP Frequency = 430 Hz
Track 1 : Approach Distance = 2055 ft
Track 1 : Uni/Bi/Sim-Bidirni = Bidirni
Track 1 : GCP Transmit Level = High
Track 1 : Island Connection = Isi1
Track 1 : Island Distance = 120 ft
Track 1 : Computed Distance = 9999 ft
Track 1 : Linearization Steps = 100

GCP: track 1 prime
Track 1 : Prime Warning Time = 25 sec
Track 1 : Prime Offset Distance = 0 ft
Track 1 : Switch MS EZ Level = 14
Track 1 : Prime MS/GCP Mode = Pred
Track 1 : Prime Pickup Delay = 30 sec
Track 1 : Prime UAX = IP
Track 1 : Prime UAX Pickup = 25 sec

GCP: track 1 low EZ detect
Track 1 : Low EZ Detection Used = No
Track 1 : Positive Start = Off
Track 1 : Enhanced Detectn Used = Yes
Track 1 : Station Stop Timer = 10 sec
Track 1 : False Activate Level = Normal
Track 1 : Poor Shunting Level = 2

GCP: track 1 MS Control
Track 1 : MS/GCP CtrlIP Used = No
Track 1 : MS Sensitivity Level = 0
Track 1 : Compensation Level = 1300
Track 1 : Low EX Adjustment = 39
Track 1 : Bidirn Dax Passthru = No

ISLAND: track 1
Track 1 : IslFrequency = 13.2 kHz
Track 1 : Pickup Delay (2s +) = 0 sec

AND: track Anding
AND 1 XR Used = Yes
AND 2 Used = No
AND 3 Used = No
AND 4 Used = No
AND 5 Used = No
AND 6 Used = No
AND 7 Used = No
AND 8 Used = No

AND: AND 1 XR
AND 1 XR Track 1 = Prime
AND 1 Enable Used = Yes
And 1 Enable Pickup = 0 sec
AND 1 Enable Drop = 0 sec
AND 1 Wrap Used = No

ADVANCED: MS restart
MS/GCP Restart Used = No

ADVANCED: out of service
OOS Control = OOS IPs

ADVANCED: out of service 2
T1 OOS Control = OOS Input 1
T1 OOS Controls = GCP and Island

ADVANCED: track wrap circuits
Wrap LOS Timer = 5 sec
Track 1 Wrap Used = No

ADVANCED: trk 1 overrides
Track 1 : AllPredictors Override Used = No

ADVANCED: OR logic
OR 1 Used = No
OR 2 Used = No
OR 3 Used = No
OR 4 Used = No

ADVANCED: InternalI/O 1
Pass Thrus = No
Int.1 Sets = Not Used
Int.1 Set by = Not Used
Int.2 Sets = Not Used
Int.2 Set by = Not Used
Int.3 Sets = Not Used
Int.3 Set by = Not Used
Int.4 Sets = Not Used
Int.4 Set by = Not Used

ADVANCED: InternalI/O 2
Int.5 Sets = Not Used
Int.5 Set by = Not Used
Int.6 Sets = Not Used
Int.6 Set by = Not Used
Int.7 Sets = Not Used
Int.7 Set by = Not Used
Int.8 Sets = Not Used
Int.8 Set by = Not Used

ADVANCED: site options
Daylight Savings = On
Units = Standard
Ext Maint CallInput = No
Emergency Activate IP = No
EZ/EX Logging = Change
EZ/EX Point Change = 3

SSCC
Gates Used = Yes
SSCC1+2 GPs Coupled = Yes
Min Activation = 20 sec
Rmt Activation Cancel = 3 min
BellOn Gate Rising = No
Mute BellOn Gate Down = No
SSCCIV Controller Used = No

SSCC: 1
SSCC-1 Activation = AND 1 XR
SSCC-1 Gate Delay = 3 sec
SSCC-1 Number of GPs = 1
SSCC-1 Number of GDs = 1
SSCC 1 : Flash Rate = 60
SSCC 1 : Low Battery Detection = No
SSCC 1 : Flash Sync = master
SSCC 1 : Invert Gate Output = No
SSCC 1 : Lamp NeutralTest = Off
Aux-1 Xng CtrlUsed = No

SSCC: 2
SSCC-2 Activation = AND 1 XR
SSCC-2 Gate Delay = 3 sec
SSCC-2 Number of GPs = 0
SSCC-2 Number of GDs = 1
SSCC 2 : Flash Rate = 60
SSCC 2 : Low Battery Detection = No
SSCC 2 : Flash Sync = slave
SSCC 2 : Invert Gate Output = No
SSCC 2 : Lamp NeutralTest = Off
Aux-2 Xng CtrlUsed = No

OUTPUT: assignment page 1
OUT 1.1 = Not Used
OUT 1.2 = Not Used

INPUT: assignment page 1
IN 1.1 = T1 Prime UAX
IN 1.2 = Not Used

IO: assignment SSCC
OUT GC 1 = Gate Output 1
OUT GC 2 = Gate Output 2
IN 7.1 = AND 1 XR Enable
IN 7.2 = Not Used
IN 7.3 = Not Used
IN 7.4 = GD 1.1
IN 7.5 = GP 1.1
IN 8.1 = Out Of Service IP 1
IN 8.2 = Not Used
IN 8.3 = Not Used
IN 8.4 = GD 2.1
IN 8.5 = Not Used

SEAR
SEAR Subnode = 99
DI 1 = General1
DI 2 = Gnd Flt Tester 2
Rly 1 = Ground Fault Test
Rly 2 = Not Used

SEAR: Inputs
SP 2.1 = Not Used
SP 3.1 = Not Used
SP 4.1 = Not Used
SP 5.1 = Not Used
SP 6.1 = Not Used

SEAR: slot 1-4 Inputs
IN 1.2 = Not Used
IN 2.1 = Not Used
IN 2.2 = Not Used
IN 3.1 = Not Used
IN 3.2 = Not Used
IN 4.1 = Not Used
IN 4.2 = Not Used

SEAR: Inputs slot 5
IN 5.1 = Not Used
IN 5.2 = Not Used

SEAR: Inputs slot 6
IN 6.1 = Not Used
IN 6.2 = Not Used

SEAR: slot 7-8 Inputs
IN 7.2 = Not Used
IN 7.3 = Not Used
IN 8.2 = Not Used
IN 8.3 = Not Used
IN 8.5 = General2

SITE: programming
Radio Subnode = 1
Password Access = Off
Low Battery Enabled = Off

Configuration Package File

Filename: 292768A.pac

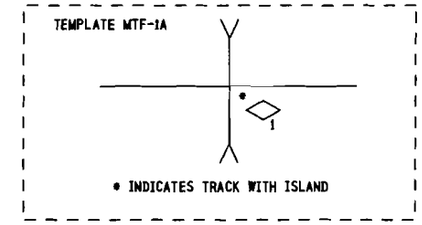

NOTES:

1) DISTANCE(S) TO BE VERIFIED AT INSTALLATION.
INDICATE SELECTED PROGRAMMED VALUE IF DIFFERENT THAN SHOWN.
REFER TO 4000 GCP INSTRUCTION/INSTALLATION MANUAL
FOR PROGRAMMING PARAMETERS.

2) PROGRAM TEXT HIGHLITED IN RED INDICATES 4000 PROGRAM
MODIFICATIONS TO DEFAULT PROGRAM VALUES.

3) EACH CONSTANT WARNING DEVICE SYSTEM TO BE PROGRAMMED TO
CONVERT TO A MOTION SENSOR 300 FEET FROM EDGE OF ROAD
TRAVELLED WAY.
SHUNT TRACK 300 FEET FROM EDGE OF ROAD TRAVELLED WAY
AND NOTE "EZ" VALUE.
PROGRAM EACH SYSTEM WITH THE INDICATED "EZ" VALUE +2.

4) VERIFY SET TIMER VALUE TO MATCH ACTUAL TRAIN MOVEMENT
WITHIN THE CROSSING APPROACH CIRCUITS.

PROPOSED
DES. No. _____
RED-IN YELLOW-OUT
AS INSTALLED
DATE _____
BY _____

PROPOSED D	M	Y	REVISIONS	D	C	COMPLETED D	M	Y	C

DIVISION MIDWEST
SUB. PEORIA
SD. 1047 C
MP. 44.30 TO 44.40

SIGNALS AND COMMUNICATIONS
EDMONTON, ALBERTA

DES. MAB
CH. RLC

04 JANUARY 2008

GCP 4000 NON REDUNDANT
PROGRAM INFORMATION
MCLEAN STREET
LINCOLN, IL

M 4436C12

SAFETRAN SYSTEM CORP.
LOUISVILLE DIVISION, LOUISVILLE, KY

SAFETRAN SYSTEMS CORPORATION

DES. : MAB	DATE: 01/04/08	JOB NO. : PICA10129	
CKD. : RLC	ISSUE DATE: N/A	EST. NO. : N/A	
DRN. : MAB	PLAN NO. : N/A	SHEET N/A OF N/A	
P TIME: 13:05	P DATE: 05-FEB-2008	CAD ID. : 4436C12.DGN	

REVISIONS			
NO.	DATE	BY	DESCRIPTION	APP. BY
1				
2				
3				
4				
5				

TO CONFIGURE SEARII & SEARIII PRESS SITE SETUP KEY. USE ARROW KEYS TO MAKE SELECTION, PRESS ENTER AFTER SELECTION HAS BEEN MADE.

STAGE 1

PROGRAM MENU QUESTIONS	PROGRAM	OPTIONS/RANGE
DATE/TIME?	CURRENT DATE/TIME	CURRENT DATE/TIME
AUTOMATIC DST ADJUSTMENT?	YES	YES, NO
TIME ZONE?	EASTERN	EASTERN, CENTRAL, MOUNTAIN, PACIFIC, ALASKA, HAWAII, ATLANTIC, SASKATCHEWAN, NEW FOUNLAND
SITE NAME?	MCLEAN STREET	STREET NAME
MILE POST?	44.36	MILEAGE
DOT/CROSSING IS #?	292 768A	
TESTER TYPE?	CROSSING	CROSSING, WAYSIDE
DATE FORMAT?	dd-mm-yyyy	mm-dd-yyyy, dd-mm-yyyy
TEMPERATURE FORMAT?	FAHRENHEIT	FAHRENHEIT, CELSIUS
SITE TYPE?	NO COM	NO COM, BULLHORN, DIALUP, NODE, COLLECTOR
SITE ATCS ADDRESS?	7.620.100.100.99.01	7.RRR.LLL.GGG.99.01
OFFICE ATCS ADDRESS?		2.RRR.NN.DDDD
(FOR NODE USE) PRIMARY HOP ADDR?		7.RRR.LLL.GGG.00.01
(FOR NODE USE) BACKUP HOP ADDR1?		7.RRR.LLL.GGG.00.01
(FOR NODE USE) BACKUP HOP ADDR2?		7.RRR.LLL.GGG.00.01
(FOR COLLECTOR USE) POLL ID?		1-99
(FOR COLLECTOR USE) MODE?		GEN/ATCS, GENISYS
(FOR COLLECTOR USE) WAMS/XID?		ENABLED, DISABLE
(FOR COLLECTOR USE) OFFICE COMM. DEVICE?		DIRECT (RS232) MCM (RS232) MCM (ECHELON) SREAD SPEC (ECHELON) DIAL MODEM (RS232) S200 RADIO (RS422)
(FOR COLLECTOR USE) OFFICE PHONE NUMBER?		PHONE NUMBER OF WAMS
(FOR COLLECTOR USE) INIT STRING?		OPTIONAL HAYES MODEM INITIALIZATION STRING
FIELD COMM. DEVICE?		VHF COMM. (ECHELON) VHF COMM. (RS232) SPREAD SPEC (ECHELON) SPREAD SPEC (RS232)
USER PORT?	57600, 8, N, 1, N	BAUD, DATA BITS, PARITY, STOP BITS, FLOW CONTROL
AUX PORT?	9600, 8, N, 1, N	BAUD, DATA BITS, PARITY, STOP BITS, FLOW CONTROL

YOU WILL NOW SEE A MESSAGE "PLEASE WAIT COMPILING STAGE 1"
CONTINUE TO NEXT PROGRAM MENU QUESTIONS.

STAGE 2

QUESTION	PROGRAM	SELECTION 1 (MINIMUM)	SELECTION 2 (MAXIMUM)	CONDITION FOR MENU DISPLAY
RESET NAMES / MODULES ?	NO	YES	NO	ALWAYS
RAILROAD NUMBER ?	360 (IC)	1	999	ALWAYS
CROSSING CONFIGURATION	NORMAL	NORMAL	SPLIT GATE (NOTE 2)	ALWAYS
ENTRANCE GATES ?	0 (NOTE 3)	0	8	ALWAYS
GATE POSTION FAIL TIME (SECONDS) ?	N/A	10	60	GATES > 0
BATTERY BANKS ?	2	1	3	ALWAYS
BATT MON USED ?	NO	NO	YES	ALWAYS
INTERNAL CROSSING CONTROLLERS ?	2	0	2	ALWAYS
EXTERNAL CROSSING CONTROLLERS ?	0	0	2	CROSSING CONTROLLER = YES
VHF COMMUNICATOR ?	YES	YES	NO	ALWAYS
DTMF ACTIVATION?	NO	NO	YES	RAILROAD = 360 (IC)
ACTIVATION CODE ?	N/A	1	999	VHF COMMUNICATOR = YES
ACTIVATION TIMEOUT ?	N/A	1	600	VHF COMMUNICATOR = YES
ILOD MODULES ?	2	0	4	ALWAYS
ANY LED BULBS USED ?	YES	NO	YES	ILOD MODULES > 0
AUTO INSPECTION ?	NO	YES	NO	ALWAYS
BELL SENSORS ?	0	0	8	ALWAYS
BELL SENSORS TSS1 ?	N/A	NO	YES	BELL SENSORS > 0
BELL SENSORS TSS2 ?	N/A	NO	YES	BELL SENSORS > 0
BELL SENSORS TSS3 ?	N/A	NO	YES	BELL SENSORS > 0
BELL SENSORS TSS4 ?	N/A	NO	YES	BELL SENSORS > 0
BELL SENSORS TSS5 ?	N/A	NO	YES	BELL SENSORS > 0
BELL SENSORS TSS6 ?	N/A	NO	YES	BELL SENSORS > 0
BELL SENSORS TSS7 ?	N/A	NO	YES	BELL SENSORS > 0
BELL SENSORS TSS8 ?	N/A	NO	YES	BELL SENSORS > 0
BELL ON ?	N/A	GATES LOWERING	GATES MOVING	BELL SENSORS > 0
GFT'S ?	YES	YES	NO	ALWAYS
BATTERIES ON GFT1 ?	2	1	2	GFT'S = YES
GATE TIP SENSORS ?	N/A	YES	NO	GATES > 0
RTU ?	NO	NO	YES	ALWAYS
VHF VOICE CHANNEL ?	1 (NOTE 1)	1	8	VHF COMMUNICATOR = YES
VHF DATA CHANNEL ?	1 (NOTE 1)	1	8	VHF COMMUNICATOR = YES
USE CELL MODEM NON-CRITICAL FEATURE ?	NO	NO	YES	ALWAYS
FULL APPROACH MOVE ALARMS ?	ACTIVATE	ACTIVATE	DO NOT ACTIVATE	ALWAYS

YOU WILL NOW SEE A MESSAGE "PLEASE WAIT COMPILING STAGE 2"
CONTINUE TO NEXT PROGRAM MENU QUESTIONS.

STAGE 3

PROGRAM MENU QUESTIONS	PROGRAM
EDIT DIGITAL INPUTS	NO
EDIT BATTERIES	NO
EDIT RELAYS	NO
EDIT TEST LEDS	NO
EDIT ILOD SENSORS	NO
EDIT VHF SETTINGS	NO
GCP4K ATCS SUBNODE?	16

SAVE CONFIGURATION

NOTES:

1) INDICATE SELECTION IN SPACE PROVIDED.
2) ADDITIONAL OPTIONS: DUAL CROSSING, EXTERNAL ENTRANCE GATE CONTROLLERS.
3) SELECT "0" IF NO GATE TIP AND BELL SENSORS ARE USED. THUS GATE AND BELL SENSOR RELATED STEPS WILL NOT BE AVAILABLE, OVERWISE ERRORS IN SEARS RECORDING WILL OCCUR.

PROPOSED
DES. No. _____
RED-IN YELLOW-OUT
AS INSTALLED
DATE _____
BY _____

SEARII EXECUTIVE SOFTWARE: 9V725-A01T SEARII APPLICATION SOFTWARE: 9V864-A01H

PROPOSED D	M	Y	REVISIONS	D	C	COMPLETED D	M	Y	C

DIVISION MIDWEST
SUB. PEORIA
SD. 1047 C
MP. 44.30 TO 44.40

SIGNALS AND COMMUNICATIONS EDMONTON, ALBERTA
DES. MAB
04 JANUARY 2008
CH. RLC

SEARIII
SETUP AND PROGRAM
MCLEAN STREET
LINCOLN, IL

M 4436C13

SAFETRAN SYSTEM CORP.
LOUISVILLE DIVISION, LOUISVILLE, KY

SAFETRAN SYSTEMS CORPORATION
DES.: MAB DATE: 01/04/08 JOB NO.: PICA10129
CKD.: RLC ISSUE DATE: N/A EST. NO.: N/A
DRN.: MAB PLAN NO.: N/A SHEET N/A OF N/A
P TIME: 13:05 P DATE: 05-FEB-2008 CAD ID.: 4436C13.DGN

REVISIONS			
NO.	DATE	BY	DESCRIPTION	APP. BY
1				
2				
3				
4				
5				

CALIBRATION HISTORY

INITIAL SET UP BY: _____ DATE: _____

DC VOLTAGE READINGS AFTER CALIBRATION				CALIBRATION HISTORY										LINEARIZATION HISTORY (NOTE 1)							
				EZ/EX VALUES (TRACK UNOCCUPIED)				HARD WIRE SHUNT AT TERMINATION SHUNT						HARD WIRE SHUNT AT 50 PERCENT POINT OF SHUNT							
				EZ		EX		EZ		EX		50 PERCENT OF EZ VALUE		NO LINEARIZATION				LINEARIZATION COMPLETE			
														EZ		EX		STEP±		EZ	
				NRML	STBY	NRML	STBY	NRML	STBY	NRML	STBY	NRML	STBY	NRML	STBY	NRML	STBY	NRML	STBY	NRML	STBY
T1	Z1=	NORTH	TRACK 1																		
	Z2=	SOUTH	TRACK 1																		

CALIBRATION HISTORY

INITIAL SET UP BY: _____ DATE: _____

DC VOLTAGE READINGS AFTER CALIBRATION				CALIBRATION HISTORY										LINEARIZATION HISTORY (NOTE 1)							
				EZ/EX VALUES (TRACK UNOCCUPIED)				HARD WIRE SHUNT AT TERMINATION SHUNT						HARD WIRE SHUNT AT 50 PERCENT POINT OF SHUNT							
				EZ		EX		EZ		EX		50 PERCENT OF EZ VALUE		NO LINEARIZATION				LINEARIZATION COMPLETE			
														EZ		EX		STEP±		EZ	
				NRML	STBY	NRML	STBY	NRML	STBY	NRML	STBY	NRML	STBY	NRML	STBY	NRML	STBY	NRML	STBY	NRML	STBY
T1	Z1=	NORTH	TRACK 1																		
	Z2=	SOUTH	TRACK 1																		

CALIBRATION HISTORY

INITIAL SET UP BY: _____ DATE: _____

DC VOLTAGE READINGS AFTER CALIBRATION				CALIBRATION HISTORY										LINEARIZATION HISTORY (NOTE 1)							
				EZ/EX VALUES (TRACK UNOCCUPIED)				HARD WIRE SHUNT AT TERMINATION SHUNT						HARD WIRE SHUNT AT 50 PERCENT POINT OF SHUNT							
				EZ		EX		EZ		EX		50 PERCENT OF EZ VALUE		NO LINEARIZATION				LINEARIZATION COMPLETE			
														EZ		EX		STEP±		EZ	
				NRML	STBY	NRML	STBY	NRML	STBY	NRML	STBY	NRML	STBY	NRML	STBY	NRML	STBY	NRML	STBY	NRML	STBY
T1	Z1=	NORTH	TRACK 1																		
	Z2=	SOUTH	TRACK 1																		

NOTE:

1) **SET UP APPROACH LENGTH AND LINEARIZATION CALIBRATION**
VERIFY THAT "ENHANCED DETECTION" MODE IS PROGRAMMED "OFF" BEFORE ATTEMPTING LINEARIZATION PROCEDURES.

PROPOSED
DES. No. _____
RED-IN YELLOW-OUT
AS INSTALLED
DATE _____
BY _____

6' X 6' BUNGALOW

PROPOSED D	M	Y	REVISIONS	D	C	COMPLETED D	M	Y	C

DIVISION MIDWEST
SUB. PEORIA
SD. 1047 C
MP. 44.30 TO 44.40

SIGNALS AND COMMUNICATIONS EDMONTON, ALBERTA | DES. MAB
04 JANUARY 2008 | CH. RLC

GCP 4000
CALIBRATION HISTORY
MCLEAN STREET
LINCOLN, IL

M 4436C14

SAFETRAN SYSTEM CORP.
LOUISVILLE DIVISION, LOUISVILLE, KY

SAFETRAN SYSTEMS CORPORATION

DES. : MAB	DATE: 01/04/08	JOB NO. : P1CA10129	
CKD. : RLC	ISSUE DATE: N/A	EST. NO. :N/A	
DRN. : MAB	PLAN NO. :N/A	SHEET N/A OF N/A	
P TIME:13:05	P DATE: 05-FEB-2008	CAD ID. : 4436C14.DGN	