CROSSING DISABLE PROCEDURE

City: Augusta, IL
Street: **TR421 / CR150**
Line Segment: 0011
Mile Post: 227.33
Plan Revision Date: January 16, 2008

Note: If the date stamp in the lower left corner of sheet 1 of the plan set does not match the plan revision date above, then these procedures are VOID.

<u>Warning:</u> An understanding of crossing signal circuits is required before any work is performed. If you are unsure of any of these procedures, consult your supervisor.

To disable crossing, comply with Signal Instruction 7.2, 7.2A, 7.2B, and 7.2C as appropriate and perform the following:

Disable one approach (from Signal Instruction 7.2):

a. Shunt affected approach outside of the island and as close to track work as practicable.
CAUTION: Shunt will adversely affect the opposite approach and may cause short warning time for Prairie St.
b. Crossing should recover in approximately 20 seconds.
c. Verify crossing island circuit is effective.
d. Test unaffected tracks and approaches for proper operation.

Disable both approaches but not the island (from Signal Instruction 7.2):

a. Shunt both approaches outside island and as close to track work as practicable in both directions.
CAUTION: Shunt may cause short warning time for Prairie St.
b. Crossing should recover after approximately 20 seconds.
c. Verify crossing island circuit is effective.

Disable Track 1 if island is affected (from Signal Instruction 7.2):

a. Open 1T1, 1T2, 1R1, and 1R2 test links to track.
b. Jumper 1T1-1 to 1R1-1.
c. Jumper 1T2-1 to 1R2-1.
d. Connect 1000' of simulated track (1-1000' donut) from 1R1-1 to 1R2-1.
NOTE: Crossing signals are inoperative.

Alternate Disable Track 1 if island is affected (from Signal Instruction 7.2):

a. Jumper B12 (13) to MDR+ (19) on the HXP-3R cabinet.
b. Jumper N12 (14) to MDR- (20) on the HXP-3R cabinet.
NOTE: You have now energized the XR relay. Crossing signals are inoperative.

<u>Warning:</u> When restoring system, verify that all shunts, test jumpers, and simulated track (donuts) have been removed and accounted for, and crossing signals are completely tested for proper operation before normal train operation is authorized.

Typ: 043007 Ch: Y

PLAN MUST NOT BE MODIFIED WITHOUT APPROVAL OF SIGNAL ENGINEERING

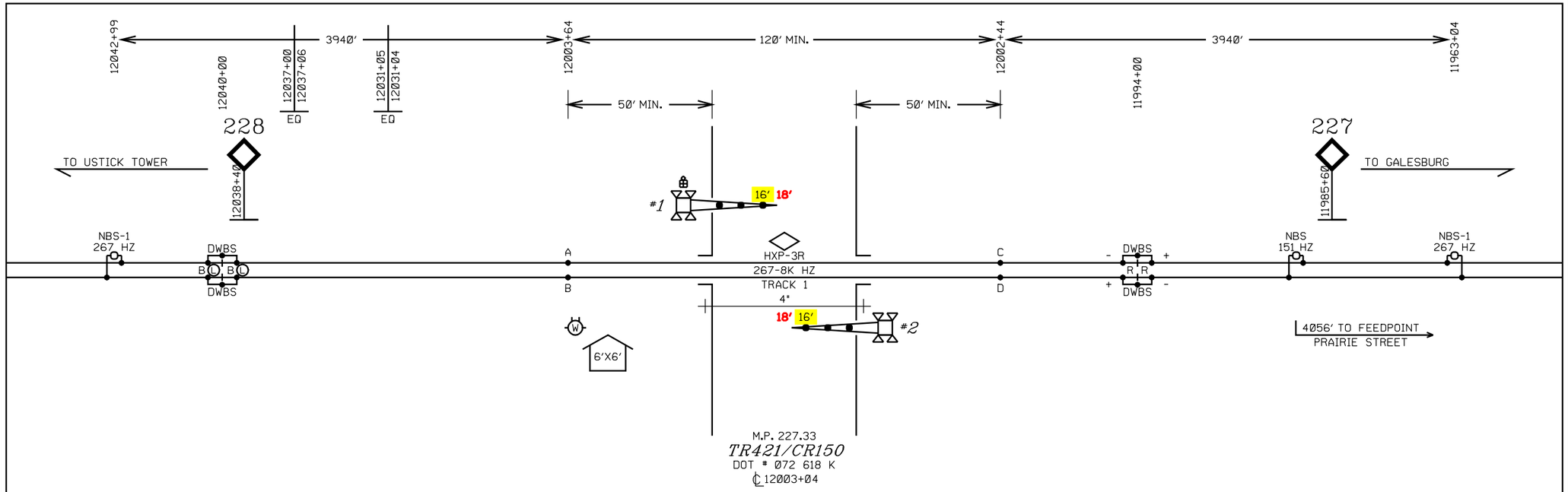

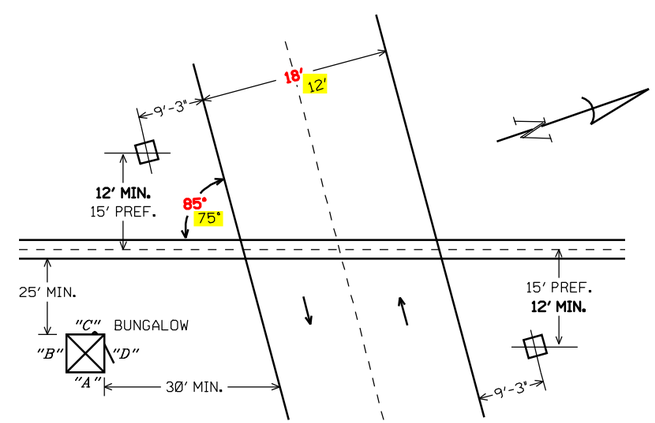

FOUNDATION PLACEMENT SKETCH
NOT TO SCALE

NOTES:

- -TEST TERMINAL
- -EQUALIZER
- -LINE ARRESTER
- -HEAVY DUTY ARRESTER
- -TWISTED WIRE 2 TURNS PER FOOT
- -CONNECTION TO REC./RTU

ALL WIRES #16 AWG UNLESS OTHERWISE NOTED

NOTES:

EQUIPMENT IS DESIGNED FOR 20 SECONDS MINIMUM WARNING TIME AT 79 MPH.
APPROACHES WERE LENGTHENED 10 SECONDS FOR SPEED VARIANCE AND BALLAST CHANGES (BT).
APPROACHES WERE LENGTHENED 4 SECONDS FOR EQUIPMENT RESPONSE TIME (ERT).
ALL LAMPS TO BE LED
GATE LENGTH SHOWN IS MEASURED FROM MAST C/L TO GATE TIP.

ALL NEW

BURLINGTON NORTHERN SANTA FE RAILWAY

CROSSING CIRCUIT PLAN
TR421/CR150 AUGUSTA, IL

REVISED 01-16-08
DESIGNED 05-23-07
NEW XING @ MP 227.33
TCS78E5 SEQ.# 35011

LS 0011	MP 227.33	SH 01 OF 10

0011227_33x01c_.dgn January 16, 2008

RED = IN YELLOW = OUT

PLAN MUST NOT BE MODIFIED WITHOUT APPROVAL OF SIGNAL ENGINEERING

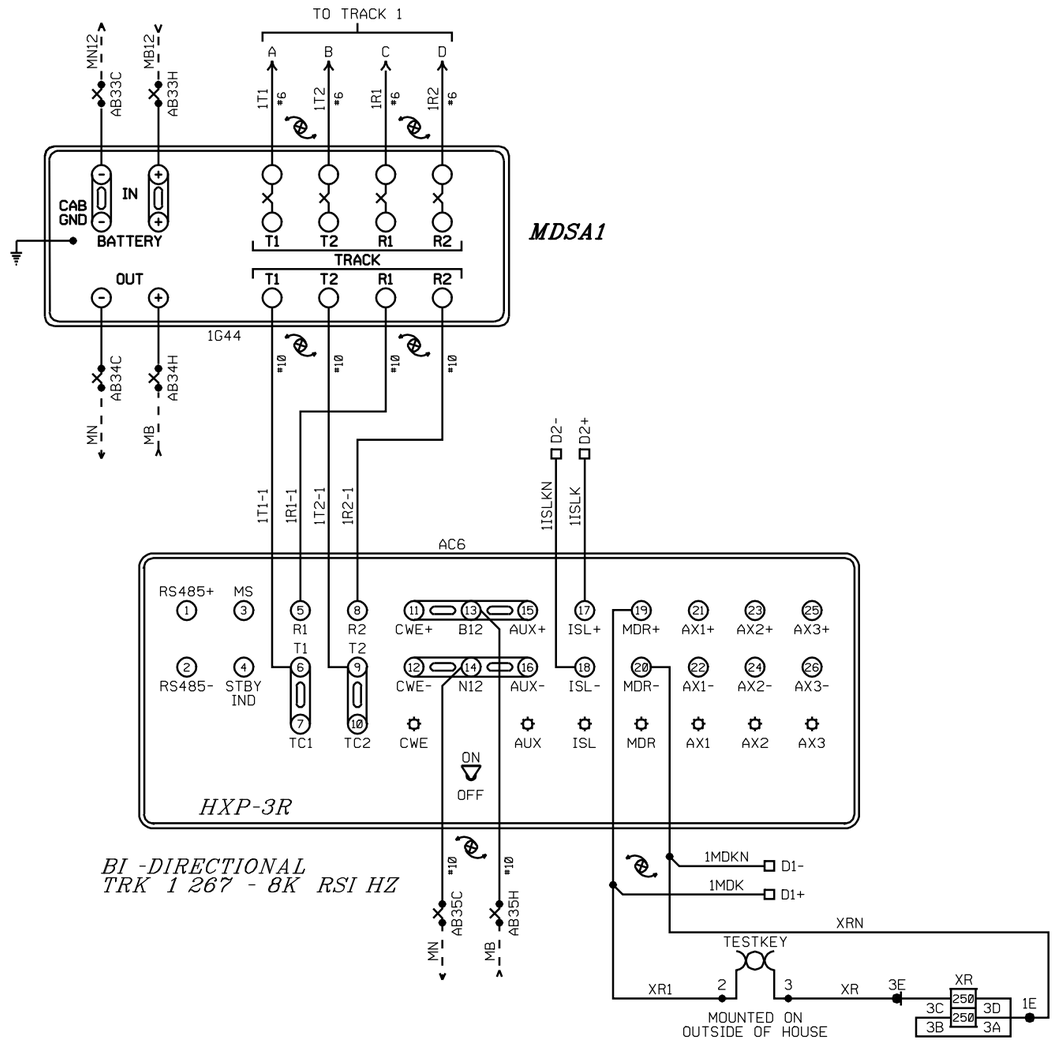

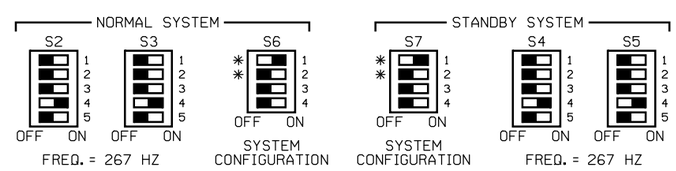

NOTES: FOR S6 AND S7

* 1.) ACTUATOR 1 SELECTS NORMAL APPROACH WHEN SET TO ON POSITION.
* 2.) WITH ACTUATOR 1 IN OFF POSITION ACTUATOR 2 SELECTS SHORT APPROACH WHEN OFF AND SELECTS VERY SHORT WHEN ON.
3.) ACTUATOR 3 OFF SELECTS HXP OPERATION.
4.) ACTUATOR 4 RESERVED FOR FUTURE USE.

ALL NEW

PROGRAM INFORMATION

PROGRAM VERSION 35.0 OR LATER

*=FIELD ADJUSTMENT TO BE MADE ACCORDING TO THE HXP-3 INSTRUCTION MANUAL AND SUPPLEMENTS.

HXP-3R ADJUSTMENTS

NO.	ADJUSTMENT NAME	TRACK 1
1	APP. LENGTH	3940'
2	WARNING TIME	30 SEC.
3	LIA	*
4	TC	*
5	MD RESTART	*

OPTION ADJUSTMENTS

NO.	ABBREVIATION	TRACK 1
1	TK-ENA	"UP"
2	TK FO	267 HZ
3	CW/MD	"C"
4	UNI-BI	"b" (BI)
5	NBS-C	*
6	CWEWT	DL (80 SEC.)
7	LOS	DL (16 SEC.)
8	IJ-LOS	DL (5 SEC.)
9	BC	*
10	P-COMP	*
11	AX1	NA
12	AX2	NA
13	AX3	NA
17	MDR-AX/OF-TK 1	DL (0)
	CJ-LOS	DL (0)
	PJ-DET	DL (15 SEC.)
	PJ-RX	DL (15)
18	MD-TMR	DL (10 MIN.)
19	MIN-WT	DL (0)
20	FS-RX	DL (0)
	FS-TM	DL (10 MIN.)
21	POS-RX	DL (0)
	POS-TM	DL (0)
22	AR-RX	DL (0)
	AR-TM	DL (10 MIN.)
47	ATO-RX	UP
48	PF-ENA	"dn"

AX ADJUSTMENTS

NO.	ABBREVIATION	AX 1	AX 2	AX 3
1	TK-ASN			
2	OF-TK1			
3	OF-TK2			
4	WT			
5	MD-RST			
6	CW/MD			
7	CJ-LOS			
8	PJ-DET			
9	PJ-RX			
10	POS-ST			

SWITCH INFORMATION

SWITCH	TRACK 1
MASTER/SLAVE	MASTER
RSI FAULT JUMPER	0
RSI-LOS JUMPER	1
TLM W1 JUMPER	PINS 1-2
TLM W2 JUMPER	PINS 1-2
TLM W3 JUMPER	PINS 2-3
MINUTE TIMEOUT	5 MIN
CW/MD	CW
STANDBY/AUTO/NORMAL	AUTO

NOTE: DL= DEFAULT LEVEL
NA= NON APPLICABLE

BURLINGTON NORTHERN SANTA FE RAILWAY

HXP-3R CIRCUITS
TR421/CR150 AUGUSTA, IL

DESIGNED 05-23-07 NEW XING @ MP 227.33 TCS/BES SEQ.# 35011

LS 0011 | MP 227.33 | SH 02 OF 10

PLAN MUST NOT BE MODIFIED WITHOUT APPROVAL OF SIGNAL ENGINEERING

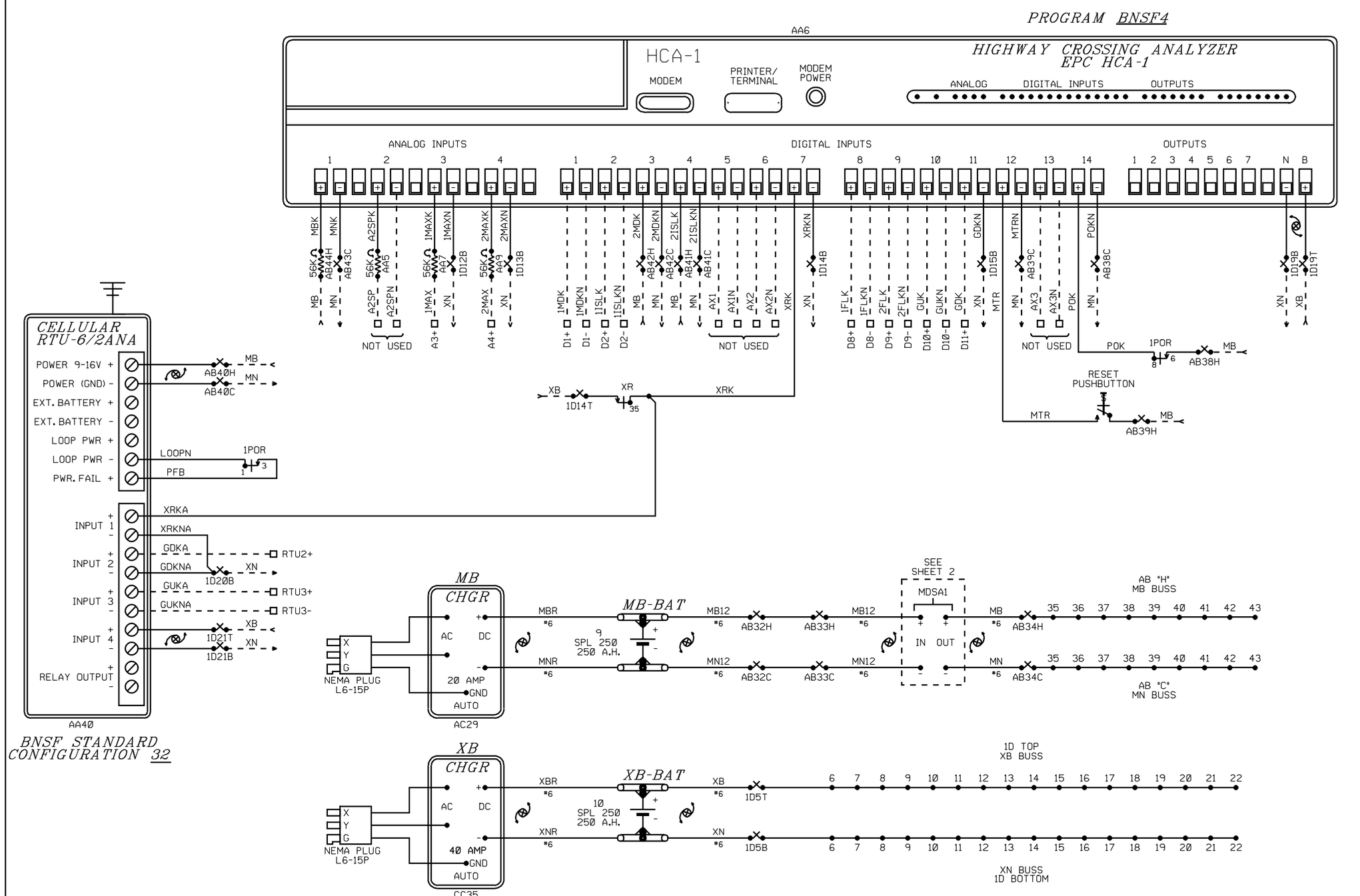

ALL NEW

BURLINGTON NORTHERN SANTA FE RAILWAY

RECORDER AND BATTERY CIRCUITS
TR421/CR150 AUGUSTA, IL

DESIGNED 05-23-07 NEW XING @ MP 227.33 TCS/BES SEQ.# 35011

LS 0011 | MP 227.33 | SH 03 OF 10

0011227_33x03c_.dgn May 23, 2007

PLAN MUST NOT BE MODIFIED WITHOUT APPROVAL OF SIGNAL ENGINEERING

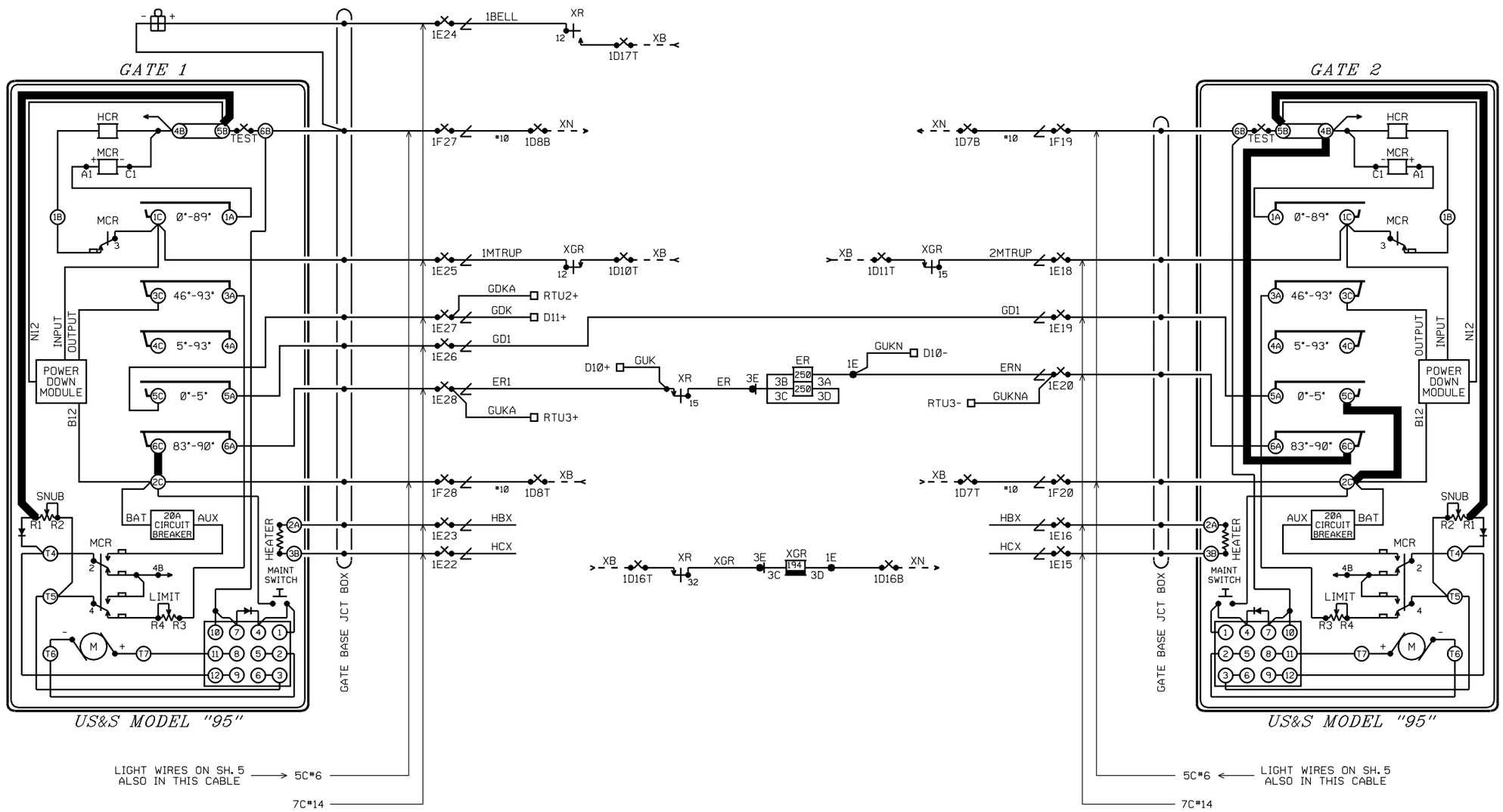

ALL NEW

DESIGNED 05-23-07
NEW XING @ MP 227.33
TCS/BES SEQ.# 35011

BURLINGTON NORTHERN SANTA FE RAILWAY

GATE CIRCUIT PLAN
TR421/CR150 AUGUSTA, IL

LS 0011	MP 227.33	SH 04 OF 10

0011227_33x04c_.dgn May 23, 2007

PLAN MUST NOT BE MODIFIED WITHOUT APPROVAL OF SIGNAL ENGINEERING

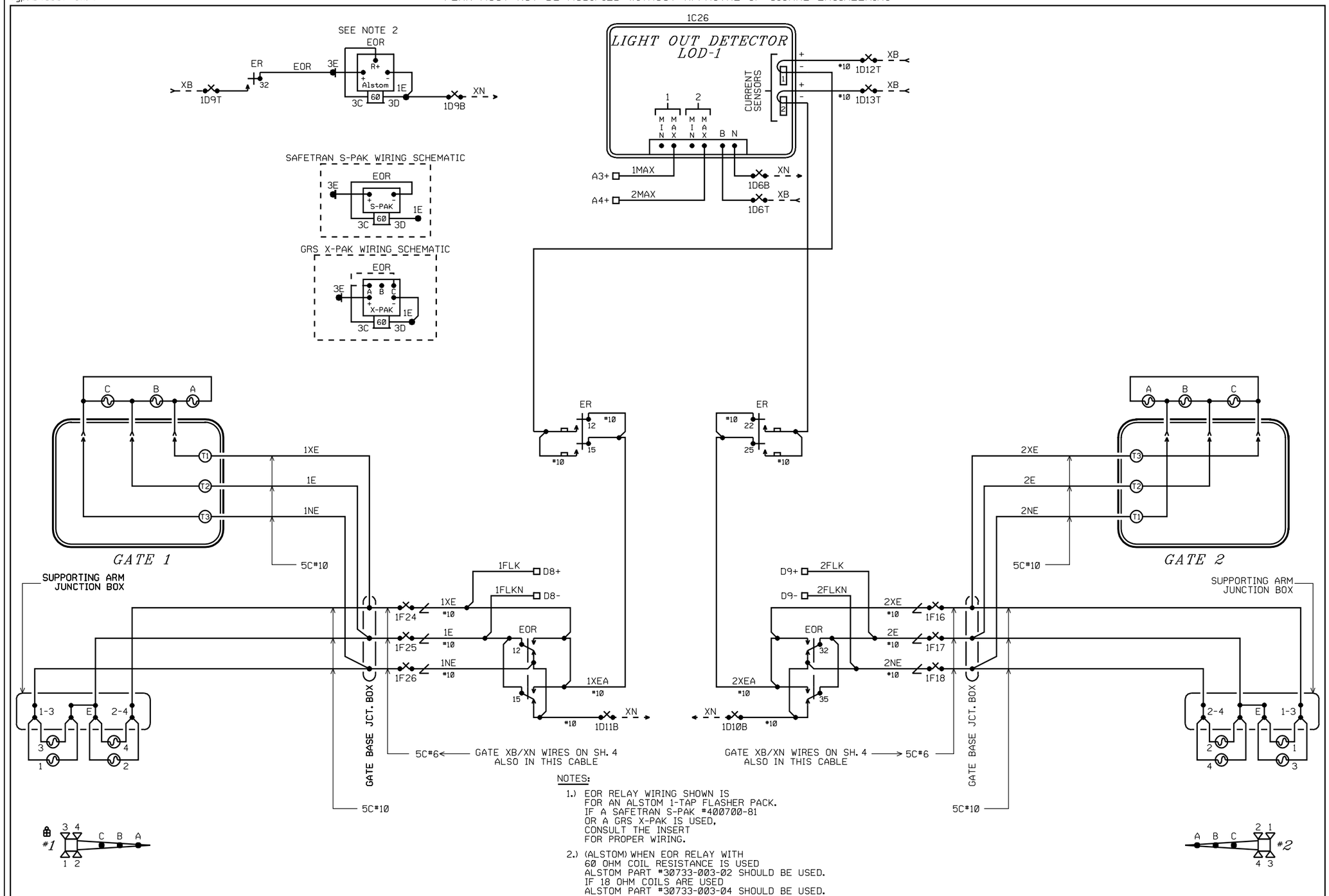

NOTES:

1.) EOR RELAY WIRING SHOWN IS FOR AN ALSTOM 1-TAP FLASHER PACK. IF A SAFETRAN S-PAK #400700-81 OR A GRS X-PAK IS USED, CONSULT THE INSERT FOR PROPER WIRING.

2.) (ALSTOM) WHEN EOR RELAY WITH 60 OHM COIL RESISTANCE IS USED ALSTOM PART #30733-003-02 SHOULD BE USED. IF 18 OHM COILS ARE USED ALSTOM PART #30733-003-04 SHOULD BE USED.

3.) (X-PAK) WHEN EOR RELAY WITH 60 OHM COIL RESISTANCE IS USED CONNECT JUMPER FROM 3C TO "A". IF 18 OHM COILS ARE USED CONNECT JUMPER FROM 3C TO "C".

4.) (S-PAK) DO NOT USE S-PAK WITH 18 OHM COILS

ALL NEW

DESIGNED 05-23-07
NEW XING @ MP 227.33
TCS/BES SEQ.# 35011

BURLINGTON NORTHERN SANTA FE RAILWAY

FLASHER CIRCUIT PLAN
TR421/CR150 AUGUSTA, IL

LS 0011	MP 227.33	SH 05 OF 10

0011227_33x05c_.dgn May 23, 2007

PLAN MUST NOT BE MODIFIED WITHOUT APPROVAL OF SIGNAL ENGINEERING

SIDE D

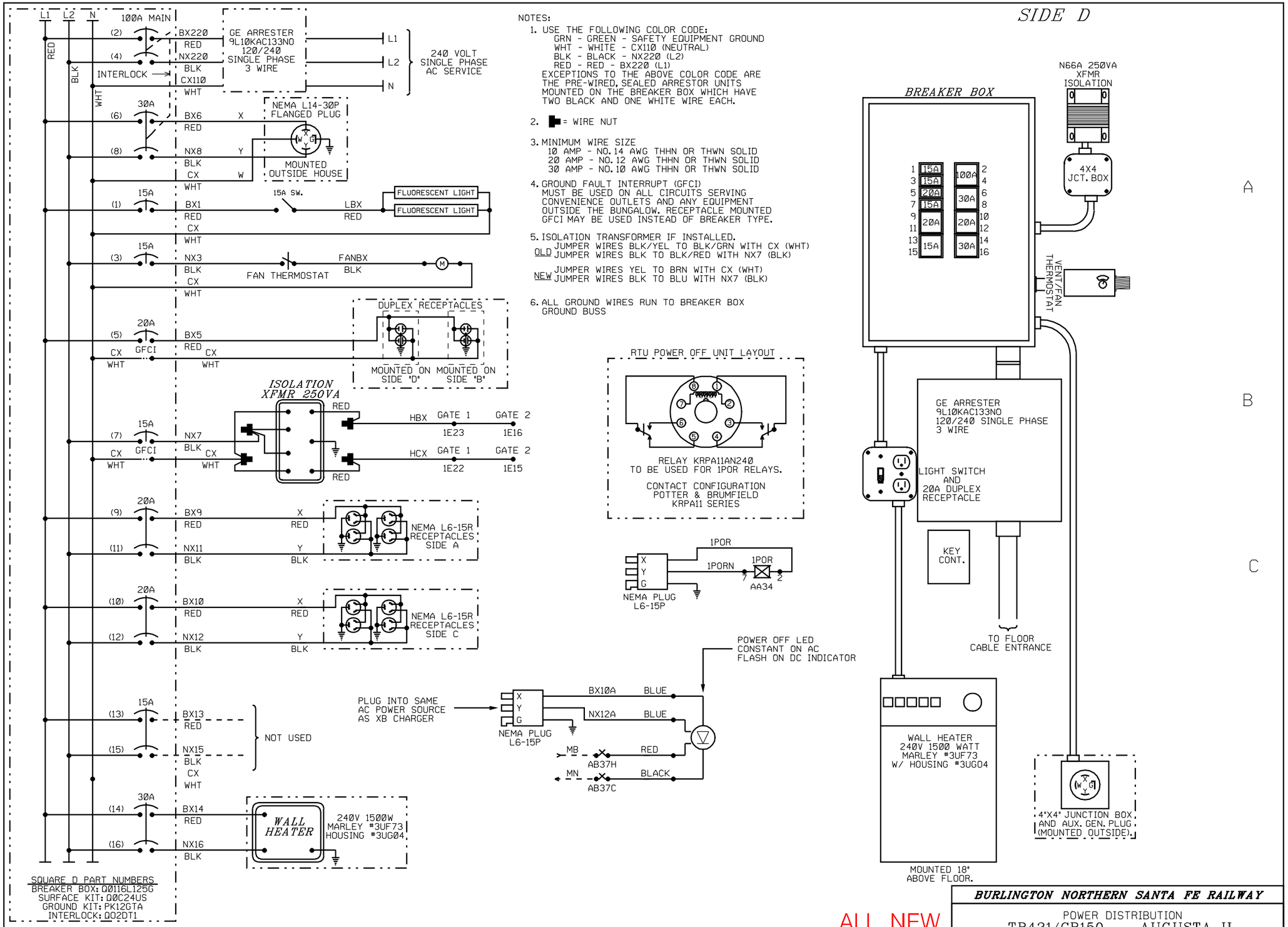

NOTES:

1. USE THE FOLLOWING COLOR CODE:
   GRN - GREEN - SAFETY EQUIPMENT GROUND
   WHT - WHITE - CX110 (NEUTRAL)
   BLK - BLACK - NX220 (L2)
   RED - RED - BX220 (L1)
   EXCEPTIONS TO THE ABOVE COLOR CODE ARE THE PRE-WIRED, SEALED ARRESTOR UNITS MOUNTED ON THE BREAKER BOX WHICH HAVE TWO BLACK AND ONE WHITE WIRE EACH.
2. = WIRE NUT
3. MINIMUM WIRE SIZE
   10 AMP - NO.14 AWG THHN OR THWN SOLID
   20 AMP - NO.12 AWG THHN OR THWN SOLID
   30 AMP - NO.10 AWG THHN OR THWN SOLID
4. GROUND FAULT INTERRUPT (GFCI) MUST BE USED ON ALL CIRCUITS SERVING CONVENIENCE OUTLETS AND ANY EQUIPMENT OUTSIDE THE BUNGALOW. RECEPTACLE MOUNTED GFCI MAY BE USED INSTEAD OF BREAKER TYPE.
5. ISOLATION TRANSFORMER IF INSTALLED.
   OLD JUMPER WIRES BLK/YEL TO BLK/GRN WITH CX (WHT)
   JUMPER WIRES BLK TO BLK/RED WITH NX7 (BLK)
   NEW JUMPER WIRES YEL TO BRN WITH CX (WHT)
   JUMPER WIRES BLK TO BLU WITH NX7 (BLK)
6. ALL GROUND WIRES RUN TO BREAKER BOX GROUND BUSS

ALL NEW

DESIGNED 05-23-07
NED KING 0.1C 227.33
TCS/BES SEL.# 35011

BURLINGTON NORTHERN SANTA FE RAILWAY

POWER DISTRIBUTION
TR421/CR150 AUGUSTA, IL

LS 0011 | MP 227.33 | SH 06 OF 10

PLAN MUST NOT BE MODIFIED WITHOUT APPROVAL OF SIGNAL ENGINEERING

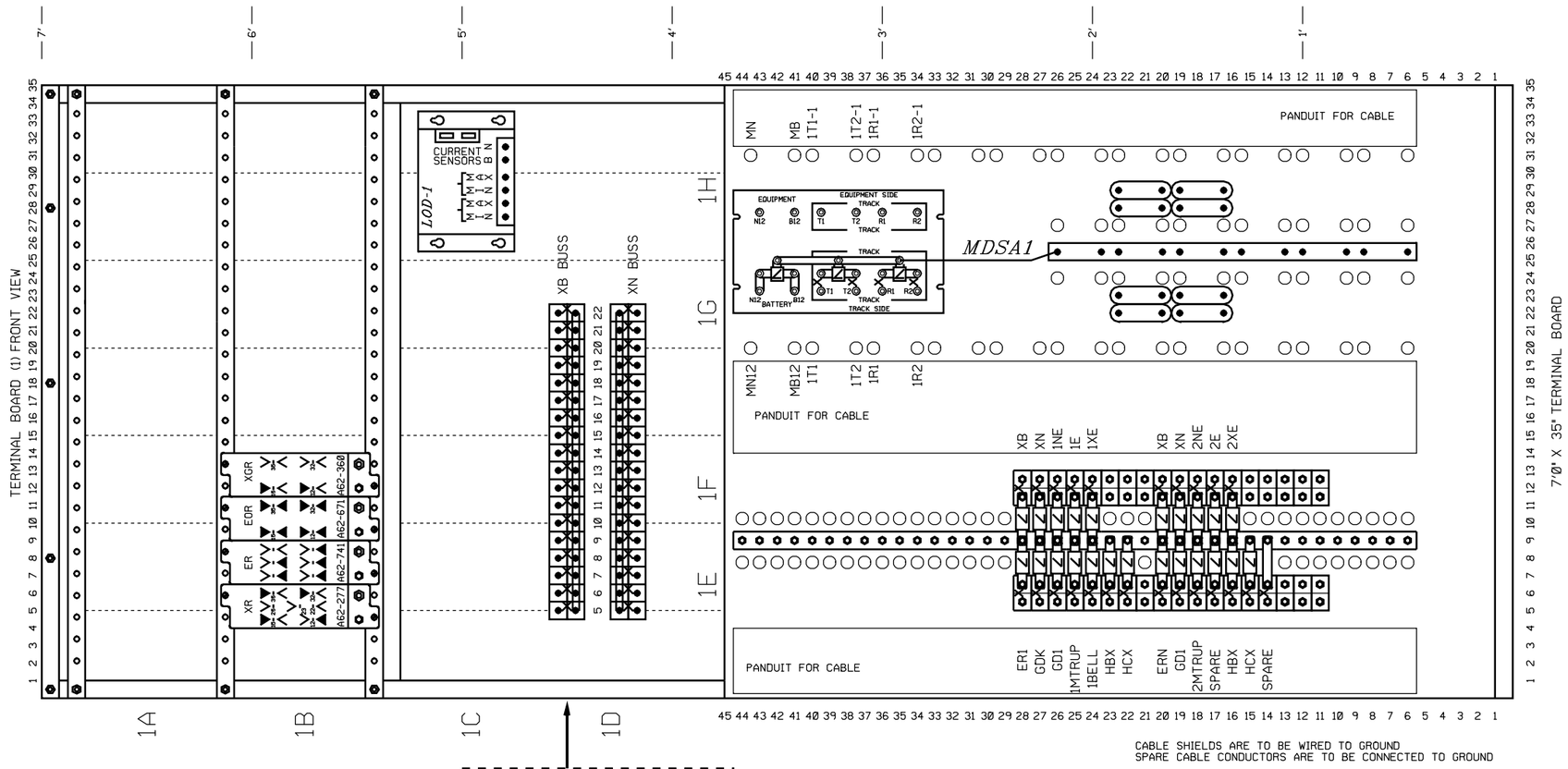

CABLE SHIELDS ARE TO BE WIRED TO GROUND
SPARE CABLE CONDUCTORS ARE TO BE CONNECTED TO GROUND

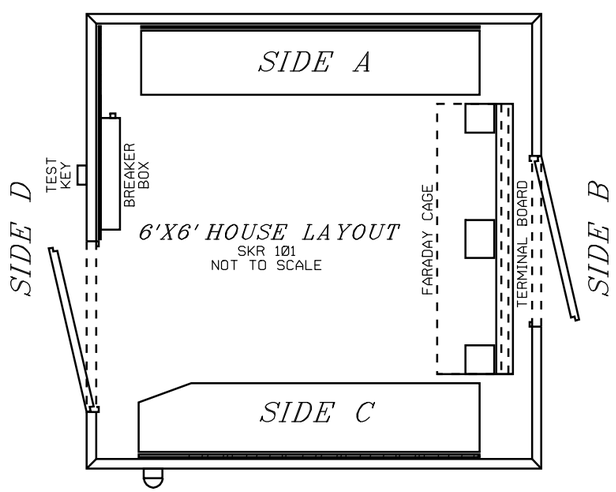

NOTE: INSTALL POWER OFF INDICATOR LIGHT ON TRACK SIDE NEAREST THE HIGHWAY AND NEAR EAVE OF HOUSE.

NOMENCLATURE FOR XB AND XN BUSS:

XB BUSS	XN BUSS
RTU4+	RTU4-
	RTU1-
REC B	REC N
XR 11	
XR 33	XGR 1E
	REC D11-
XR 36	REC D7-
LOD1 2+	REC A4-
LOD1 1+	REC A3-
XGR 16	EOR 14
XGR 13	EOR 34
ER 31	EOR 1E
1F28	1F27
1F20	1F19
LOD1 B	LOD1 N
XB BATT+	XB BATT-

FARADAY CAGE LAYOUT NOTES:

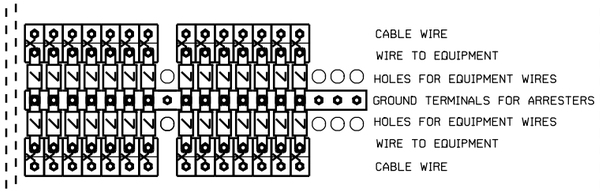

RELAY CROSS REFERENCE

GRS	SAFETRAN
A62-277	400004
A62-741	400005
A62-671	400700
A62-360	400200

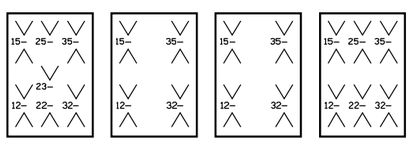

▼ = CONTACT USED

V = CONTACT NOT USED

ALL NEW

DESIGNED 05-23-07
NEW KING & KA 227.33
TCS/BES SEQ.# 350II

BURLINGTON NORTHERN SANTA FE RAILWAY

TERMINAL BOARD LAYOUT
TR421/CR150 AUGUSTA, IL

LS 0011 | MP 227.33 | SH 07 OF 10

PLAN MUST NOT BE MODIFIED WITHOUT APPROVAL OF SIGNAL ENGINEERING

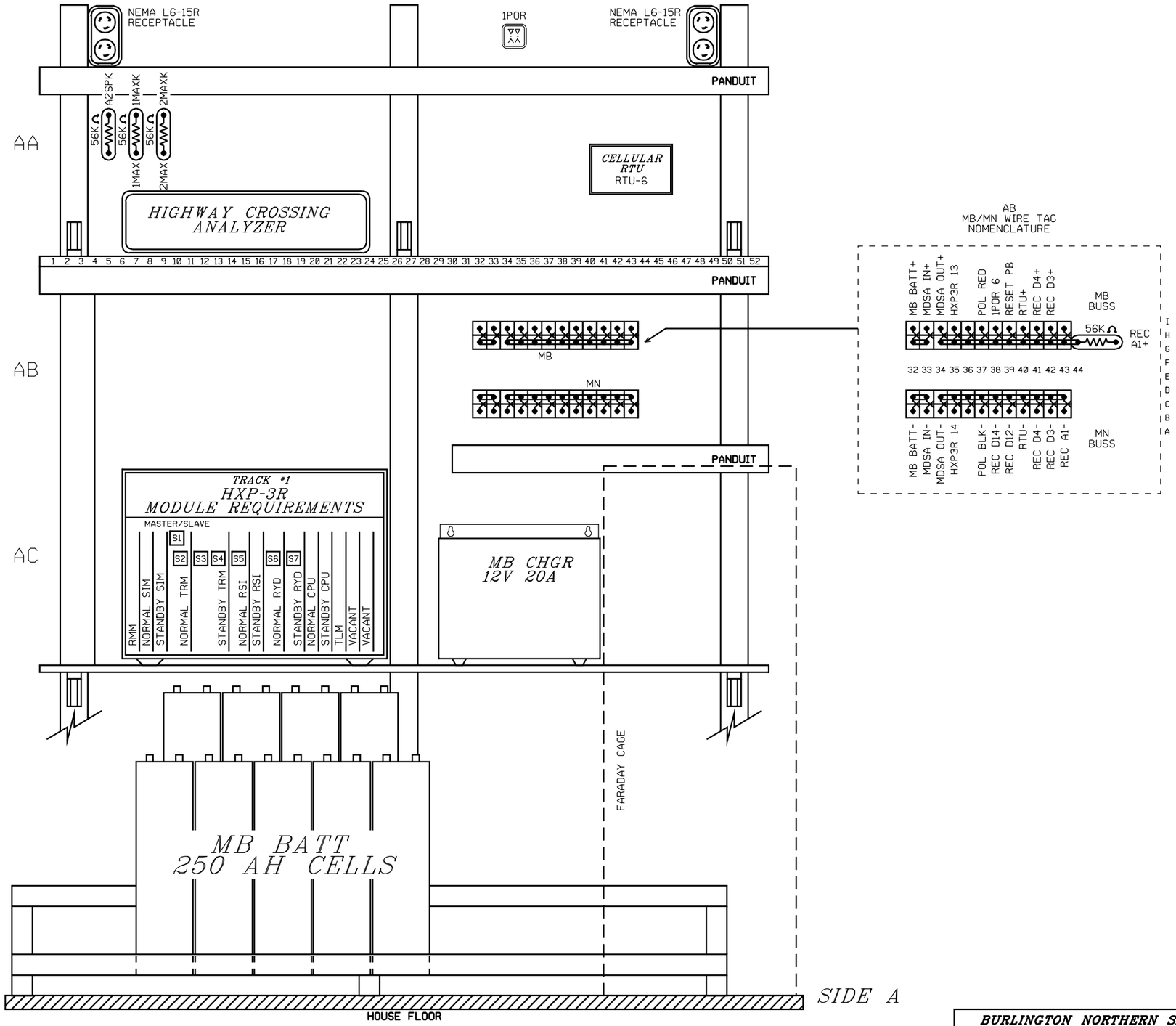

ALL NEW

BURLINGTON NORTHERN SANTA FE RAILWAY

SIDE "A" SHELF LAYOUT
TR421/CR150 AUGUSTA, IL

DESIGNED 05-23-07
NEW XING @ MP 227.33
TCS/BES SEQ.# 35011

LS 0011	MP 227.33	SH 08 OF 10

PLAN MUST NOT BE MODIFIED WITHOUT APPROVAL OF SIGNAL ENGINEERING

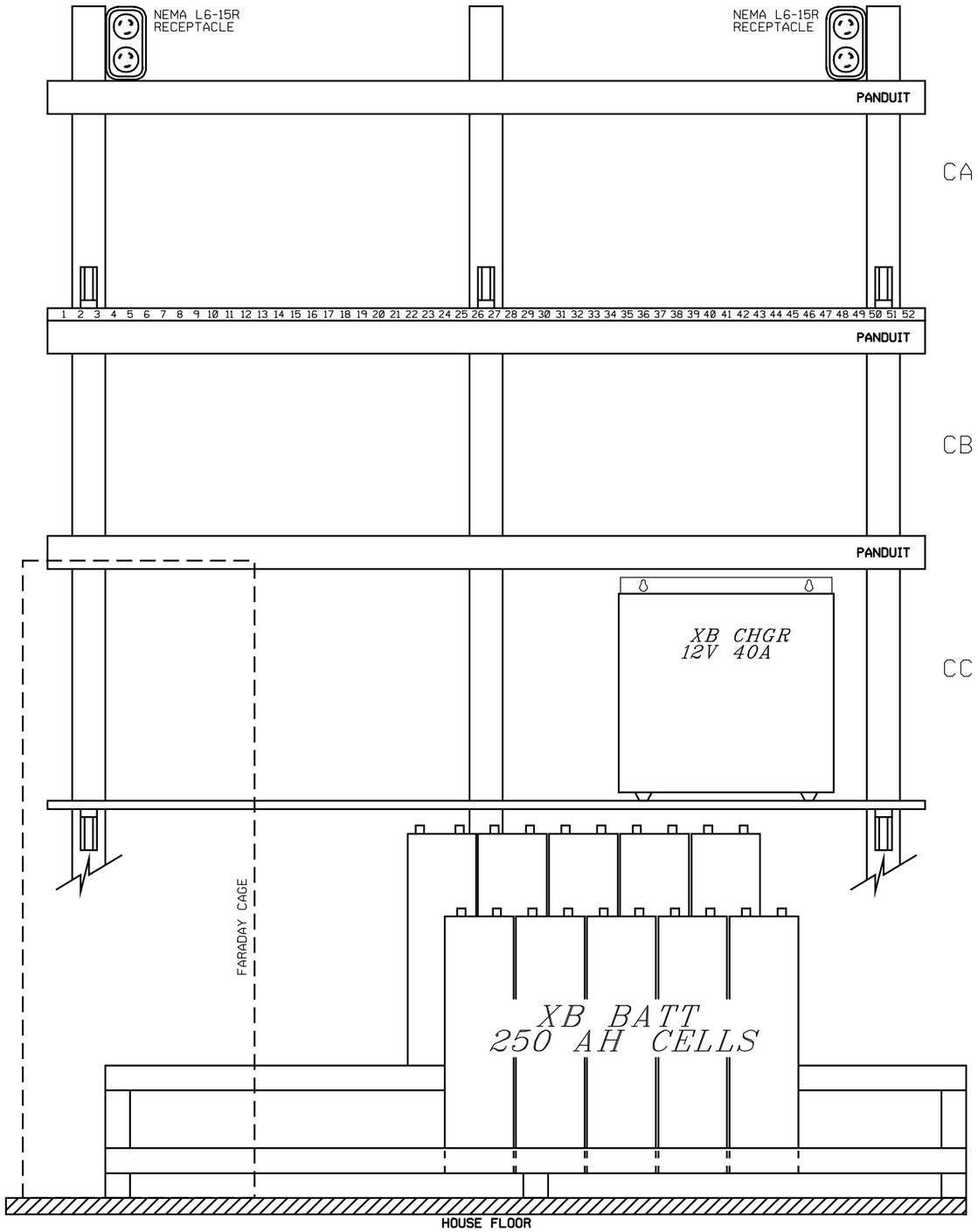

SIDE C

ALL NEW

BURLINGTON NORTHERN SANTA FE RAILWAY

SIDE "C" SHELF LAYOUT
TR421/CR150 AUGUSTA, IL

DESIGNED 05-23-07
NEW KING & MP 227.33
TCS/BES SEQ.# 36011

LS	MP	SH
0011	227.33	09 OF 10

PLAN MUST NOT BE MODIFIED WITHOUT APPROVAL OF SIGNAL ENGINEERING

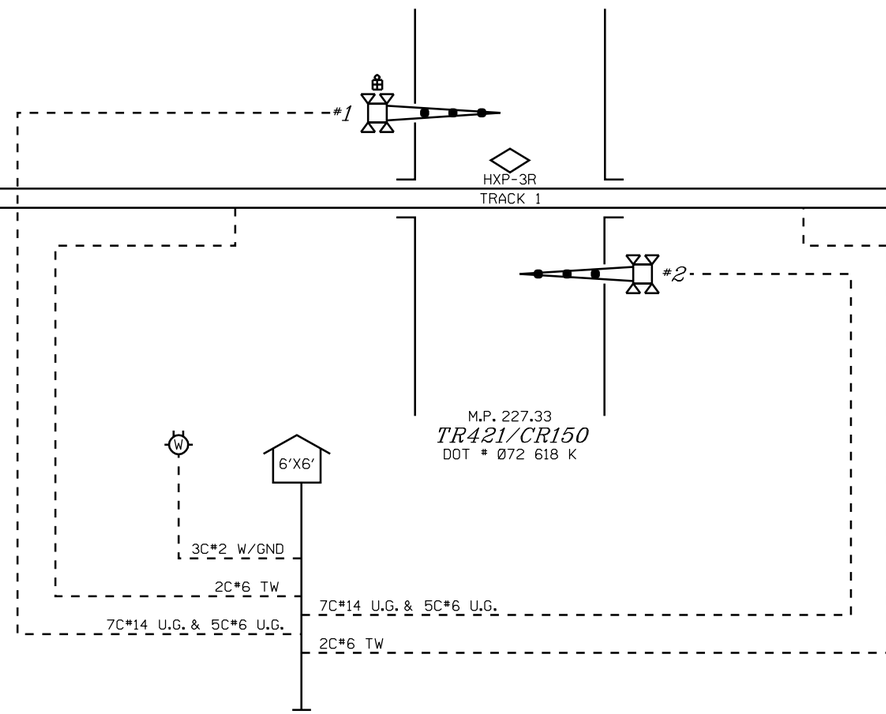

ALL NEW

DESIGNED 05-23-07
NEW XING @ MP 227.33
TCS/BES SEQ.# 36011

BURLINGTON NORTHERN SANTA FE RAILWAY

CABLE LAYOUT
TR421/CR150 AUGUSTA, IL

LS	MP	SH
0011	227.33	10 OF 10