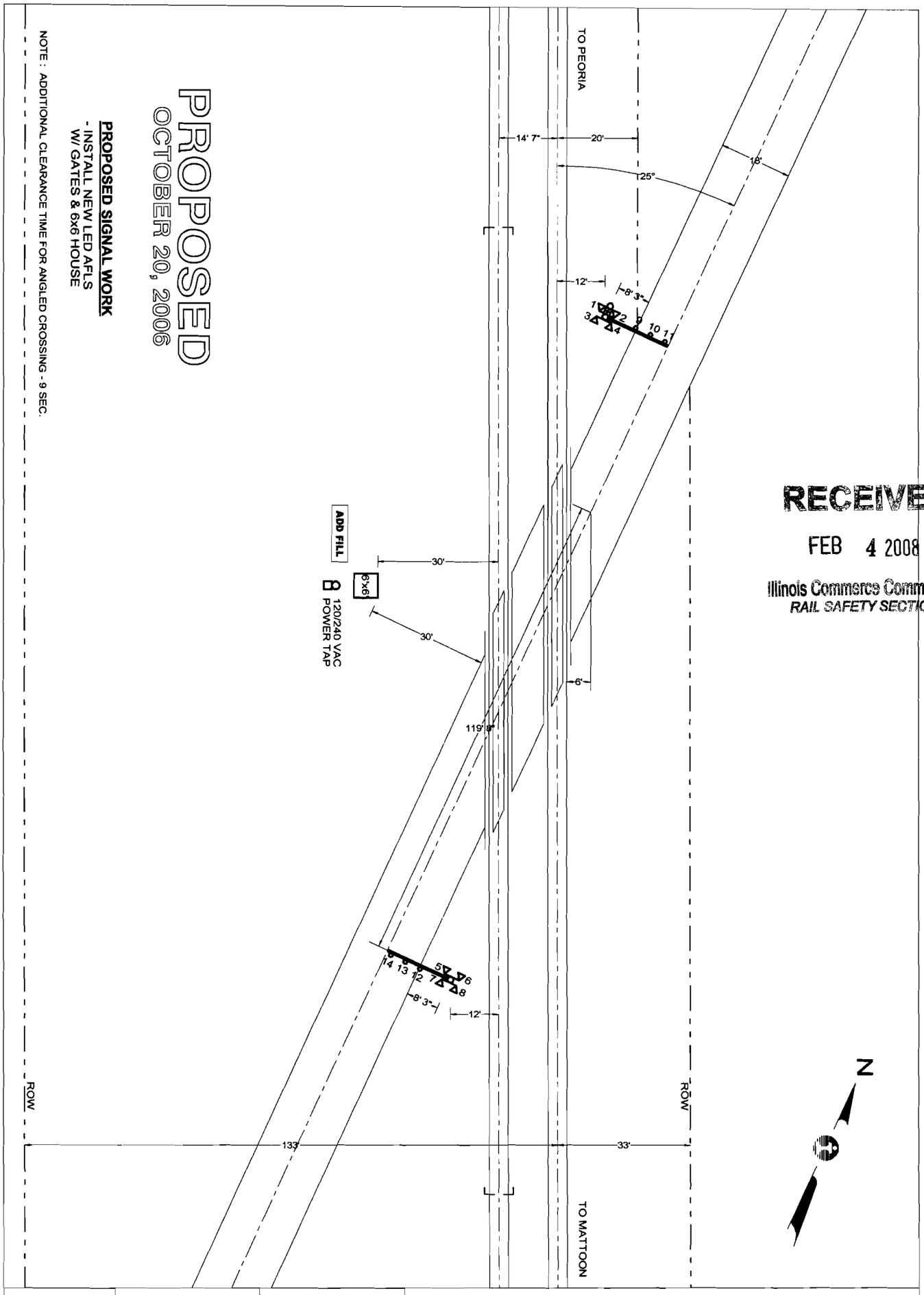


RECEIVED
FEB 4 2008
Illinois Commerce Commission
RAIL SAFETY SECTION

| QUADRANT | NE | SW |
|---|---|---|
| STANDARD AFLS | LED | LED |
| CANTILEVER, FT. | - | - |
| GATE, FT. | 17 | 17 |
| ADDED LIGHTS | - | - |
| BARRICADE | - | - |
| MULTI-TK SIGN | - | - |
| BELL | X | - |
| REVISIONS | | |

E:\DWG\PEO\04905X.CAD

CN

SIGNALS & COMMUNICATIONS, ENGINEERING DEPARTMENT

| | |
|---|---|
| CITY & STATE: CHESTERVALE, IL | SD 1047 X |
| CROSSING: 1450TH AVE / TR 216 | DATE: OCT 20, 2006 |
| IC - 49.05-B | DOT - 292 780G |
| MIDWEST DIVISION | PEORIA SUBDIVISION |
| IN SERVICE | SCALE: 1"=30' / DRAWN BY: AVS |

# SD 1047 - MP 48 TO 49

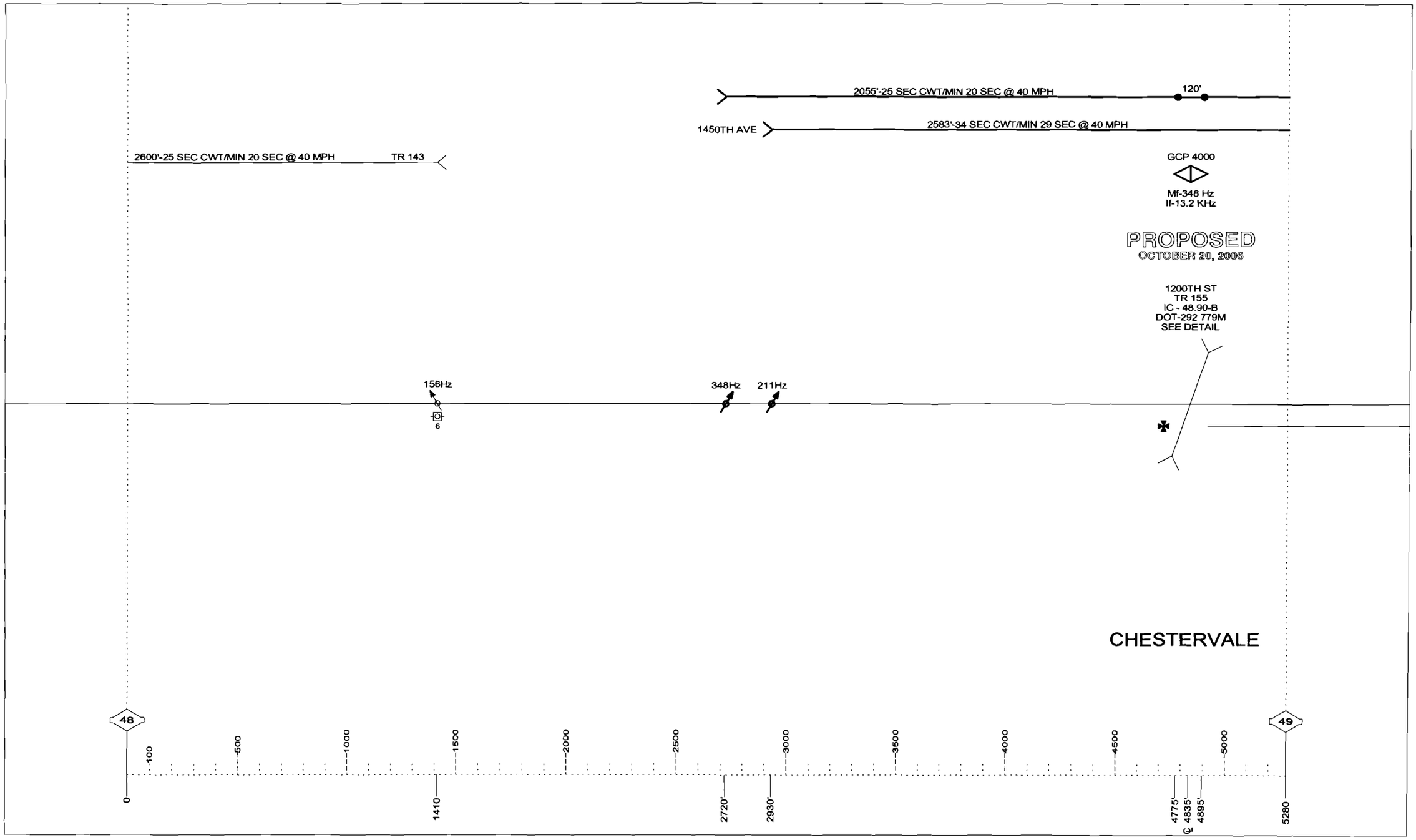


DRAWING SCALE 1" = 500'

11-9-00

# SD 1047 - MP 49 TO 50

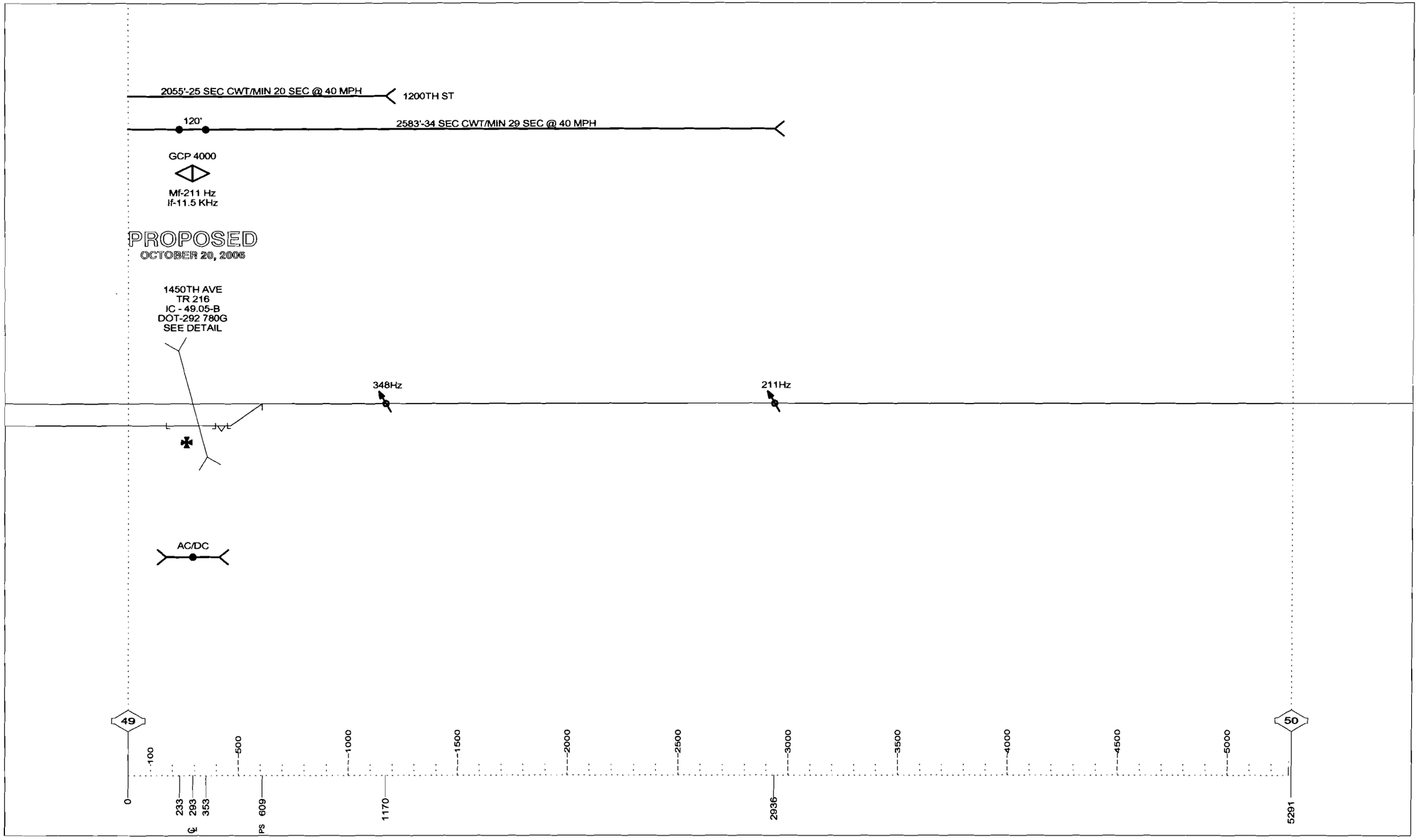


DRAWING SCALE 1" = 500'

| REVISIONS | | | | |
|---|---|---|---|---|
| NO. | DATE | BY | DESCRIPTION | APP. BY |
| 1 | | | | |
| 2 | | | | |
| 3 | | | | |
| 4 | | | | |
| 5 | | | | |

Program Report

Location and SIN

DOT Number: 292780G
Milepost Number: 49.05
Site Name: 1450TH AVE TR16

SIN: 762010010016

MCF and Template Selection

MCF Name: GCP-T6X-01-2.mcf
MCF Revision: D12
MCFCRC: 0DFE7A0C

Template = 1A:6 Trk Bl

Program

BASIC: module configuration
Track 1 Slot = Track
Track 2/RIO 1 Slot = Not Used
Track 3 Slot = Not Used
Track 4 Slot = Not Used
Track 5/RIO 2 Slot = Not Used
Track 6/RIO 3 Slot = Not Used
SSCC-1 Slot = SSCC3I
SSCC-2 Slot = SSCC3I
SEAR Used = Yes

BASIC: MS/GCP operation
Track 1 : MS/GCP Operation = Yes

BASIC: Island operation
Track 1 : Island Used = Internal

BASIC: preemption
Preempt Logic = No

BASIC: radio Dax Hnks
Radio DAX link A Used = No
Radio DAX link B Used = No

BASIC: Vital Comms links
Vital Comms link 1 Used = No
Vital Comms link 2 Used = No

PREDICTORS: track 1
Track 1 : Prime Used = Yes
Track 1 : Dax A Used = No
Track 1 : Dax B Used = No
Track 1 : Dax C Used = No
Track 1 : Dax D Used = No
Track 1 : Dax E Used = No
Track 1 : Dax F Used = No
Track 1 : Dax G Used = No

GCP: track 1
Track 1 : GCP Freq Category = Standard
Track 1 : GCP Frequency = 211 Hz
Track 1 : Approach Distance = 2583 ft
Track 1 : Uni/Bi/Sim-Bidirni = Bidirni
Track 1 : GCP Transmit Level = High
Track 1 : Island Connection = Isi1
Track 1 : Island Distance = 120 ft
Track 1 : Computed Distance = 9999 ft
Track 1 : Linearization Steps = 100

GCP: track 1 prime
Track 1 : Prime Warning Time = 34 sec
Track 1 : Prime Offset Distance = 0 ft
Track 1 : Switch MS EZ Level = 12
Track 1 : Prime MS/GCP Mode = Pred
Track 1 : Prime Pickup Delay = 30 sec
Track 1 : Prime UAX = Not Used

GCP: track 1 low EZ detect
Track 1 : Low EZ Detection Used = No
Track 1 : Positive Start = Off
Track 1 : Enhanced Detectn Used = Yes
Track 1 : Station Stop Timer = 10 sec
Track 1 : False Activate Level = Normal
Track 1 : Poor Shunting Level = 2

GCP: track 1 MS Control
Track 1 : MS/GCP CtrlIP Used = No
Track 1 : MS Sensitivity Level = 0
Track 1 : Compensation Level = 1300
Track 1 : Low EX Adjustment = 39
Track 1 : Bidirn Dax Passthru = No

ISLAND: track 1
Track 1 : IsiFrequency = 11.5 kHz
Track 1 : Pickup Delay (2s +) = 0 sec

AND: track Anding
AND 1 XR Used = Yes
AND 2 Used = No
AND 3 Used = No
AND 4 Used = No
AND 5 Used = No
AND 6 Used = No
AND 7 Used = No
AND 8 Used = No

AND: AND 1 XR
AND 1 XR Track 1 = Prime
AND 1 Enable Used = Yes
And 1 Enable Pickup = 0 sec
AND 1 Enable Drop = 0 sec
AND 1 Wrap Used = No

ADVANCED: MS restart
MS/GCP Restart Used = No

ADVANCED: out of service
OOS Control = OOS IPs

ADVANCED: out of service 2
T1 OOS Control = OOS Input 1
T1 OOS Controls = GCP and Island

ADVANCED: track wrap circuits
Wrap LOS Timer = 5 sec
Track 1 Wrap Used = No

ADVANCED: trk 1 overrides
Track 1 : All Predictors Override Used = No

ADVANCED: OR logic
OR 1 Used = No
OR 2 Used = No
OR 3 Used = No
OR 4 Used = No

ADVANCED: Internal I/O 1
Pass Thrus = No
Int. 1 Sets = Not Used
Int. 1 Set by = Not Used
Int. 2 Sets = Not Used
Int. 2 Set by = Not Used
Int. 3 Sets = Not Used
Int. 3 Set by = Not Used
Int. 4 Sets = Not Used
Int. 4 Set by = Not Used

ADVANCED: Internal I/O 2
Int. 5 Sets = Not Used
Int. 5 Set by = Not Used
Int. 6 Sets = Not Used
Int. 6 Set by = Not Used
Int. 7 Sets = Not Used
Int. 7 Set by = Not Used
Int. 8 Sets = Not Used
Int. 8 Set by = Not Used

ADVANCED: site options
Daylight Savings = On
Units = Standard
Ext Maint Call Input = No
Emergency Activate IP = No
EZ/EX Logging = Change
EZ/EX Point Change = 3

SSCC
Gates Used = Yes
SSCCI+2 GPs Coupled = Yes
Min Activation = 20 sec
Rmt Activation Cancel = 3 min
Bell On Gate Rising = No
Mute Bell On Gate Down = No
SSCCIV Controller Used = No

SSCC: 1
SSCC-1 Activation = AND 1 XR
SSCC-1 Gate Delay = 3 sec
SSCC-1 Number of GPs = 1
SSCC-1 Number of GDs = 1
SSCC 1 : Flash Rate = 60
SSCC 1 : Low Battery Detection = No
SSCC 1 : Flash Sync = master
SSCC 1 : Invert Gate Output = No
SSCC 1 : Lamp Neutral Test = Off
Aux-1 Xng Ctrl Used = No

SSCC: 2
SSCC-2 Activation = AND 1 XR
SSCC-2 Gate Delay = 3 sec
SSCC-2 Number of GPs = 0
SSCC-2 Number of GDs = 1
SSCC 2 : Flash Rate = 60
SSCC 2 : Low Battery Detection = No
SSCC 2 : Flash Sync = slave
SSCC 2 : Invert Gate Output = No
SSCC 2 : Lamp Neutral Test = Off
Aux-2 Xng Ctrl Used = No

OUTPUT: assignment page 1
OUT 1.1 = Not Used
OUT 1.2 = Not Used

INPUT: assignment page 1
IN 1.1 = AND 1 XR Enable
IN 1.2 = Not Used

IO: assignment SSCC
OUT GC 1 = Gate Output 1
OUT GC 2 = Gate Output 2
IN 7.1 = Not Used
IN 7.2 = Not Used
IN 7.3 = Not Used
IN 7.4 = GD 1.1
IN 7.5 = GP 1.1
IN 8.1 = Out Of Service IP 1
IN 8.2 = Not Used
IN 8.3 = Not Used
IN 8.4 = GD 2.1
IN 8.5 = Not Used

SEAR
SEAR Subnode = 99
DI 1 = General 1
DI 2 = Gnd Flt Tester 2
Rly 1 = Ground Fault Test
Rly 2 = Not Used

SEAR: Inputs
SP 2.1 = Not Used
SP 3.1 = Not Used
SP 4.1 = Not Used
SP 5.1 = Not Used
SP 6.1 = Not Used

SEAR: slot 1-4 Inputs
IN 1.2 = Not Used
IN 2.1 = Not Used
IN 2.2 = Not Used
IN 3.1 = Not Used
IN 3.2 = Not Used
IN 4.1 = Not Used
IN 4.2 = Not Used

SEAR: Inputs slot 5
IN 5.1 = Not Used
IN 5.2 = Not Used

SEAR: Inputs slot 6
IN 6.1 = Not Used
IN 6.2 = Not Used

SEAR: slot 7-8 Inputs
IN 7.1 = Not Used
IN 7.2 = Not Used
IN 7.3 = Not Used
IN 8.2 = Not Used
IN 8.3 = Not Used
IN 8.5 = General 2

SITE: programming
Radio Subnode = 1
Password Access = Off
Low Battery Enabled = Off

Configuration Package File

Filename: 292780G.pac

TEMPLATE MTF-1A

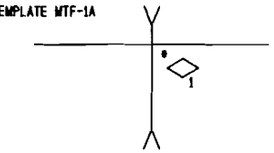


* INDICATES TRACK WITH ISLAND

NOTES:

1) DISTANCE(S) TO BE VERIFIED AT INSTALLATION. INDICATE SELECTED PROGRAMMED VALUE IF DIFFERENT THAN SHOWN. REFER TO 4000 GCP INSTRUCTION/INSTALLATION MANUAL FOR PROGRAMMING PARAMETERS.

2) PROGRAM TEXT HIGHLITED IN RED INDICATES 4000 PROGRAM MODIFICATIONS TO DEFAULT PROGRAM VALUES.

3) EACH CONSTANT WARNING DEVICE SYSTEM TO BE PROGRAMMED TO CONVERT TO A MOTION SENSOR 300 FEET FROM EDGE OF ROAD TRAVELLED WAY. SHUNT TRACK 300 FEET FROM EDGE OF ROAD TRAVELLED WAY AND NOTE "EZ" VALUE. PROGRAM EACH SYSTEM WITH THE INDICATED "EZ" VALUE +2.

4) VERIFY SET TIMER VALUE TO MATCH ACTUAL TRAIN MOVEMENT WITHIN THE CROSSING APPROACH CIRCUITS.

PROPOSED
DES. No. _____
RED-IN YELLOW-OUT
AS INSTALLED
DATE _____
BY _____

| PROPOSED | | | REVISIONS | D | C | COMPLETED | | | C |
|---|---|---|---|---|---|---|---|---|---|
| D | M | Y | | | | D | M | Y | |
| | | | | | | | | | |

DIVISION MIDWEST
SUB. PEORIA
SD. 1047 C
MP. 49.00 TO 49.60

SIGNALS AND COMMUNICATIONS EDMONTON, ALBERTA
DES. LGY
21 DECEMBER 2007
CHL RLC

GCP 4000 NON REDUNDANT
PROGRAM INFORMATION
1450TH AVE./TR216
CHESTERVALE, IL

M 04900C12

SAFETRAN SYSTEM CORP.
LOUISVILLE DIVISION, LOUISVILLE, KY

SAFETRAN SYSTEMS CORPORATION

| | | | |
|---|---|---|---|
| DES. : LGY | DATE: 12/21/07 | JOB NO. : PICA10138 | |
| CKD. : RLC | ISSUE DATE: N/A | EST. NO. : N/A | |
| DRN. : LGY | PLAN NO. : N/A | SHEET N/A OF N/A | |
| P TIME: 14:23 | P DATE: 30-JAN-2008 | CAD ID. : 04900C12 | |

RECEIVED
FEB 4 2008
Illinois Commerce Commission
RAIL SAFETY SECTION

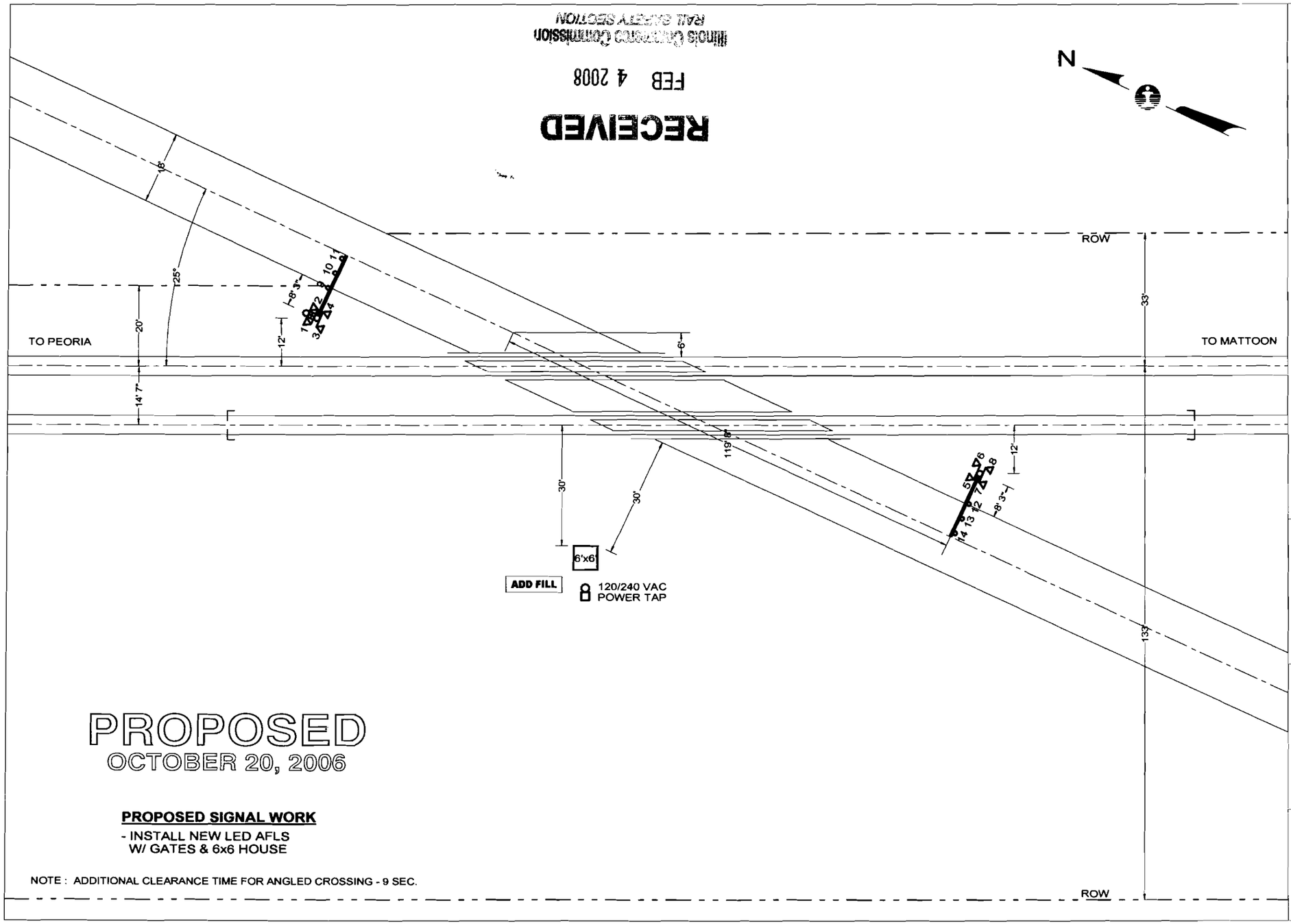


# PROPOSED
## OCTOBER 20, 2006

**PROPOSED SIGNAL WORK**

- INSTALL NEW LED AFLS
  W/ GATES & 6x6 HOUSE

NOTE : ADDITIONAL CLEARANCE TIME FOR ANGLED CROSSING - 9 SEC.

| QUADRANT | NE | SW |
|---|---|---|
| STANDARD AFLS | LED | LED |
| CANTILEVER, FT. | - | - |
| GATE, FT. | 17 | 17 |
| ADDED LIGHTS | - | - |
| BARRICADE | - | - |
| MULTI-TK SIGN | - | - |
| BELL | X | - |
| REVISIONS | | |

E:\DWG\PEO\04905X.CAD

SIGNALS & COMMUNICATIONS, ENGINEERING DEPARTMENT

CITY & STATE: CHESTERVALE, IL

SD 1047 X

CROSSING: 1450TH AVE / TR 216

DATE: OCT 20, 2006

IC - 49.05-B

DOT - 292 780G

MIDWEST DIVISION

PEORIA SUBDIVISION

IN SERVICE

SCALE: 1"=30'

DRAWN BY: AVS

# SD 1047 - MP 48 TO 49

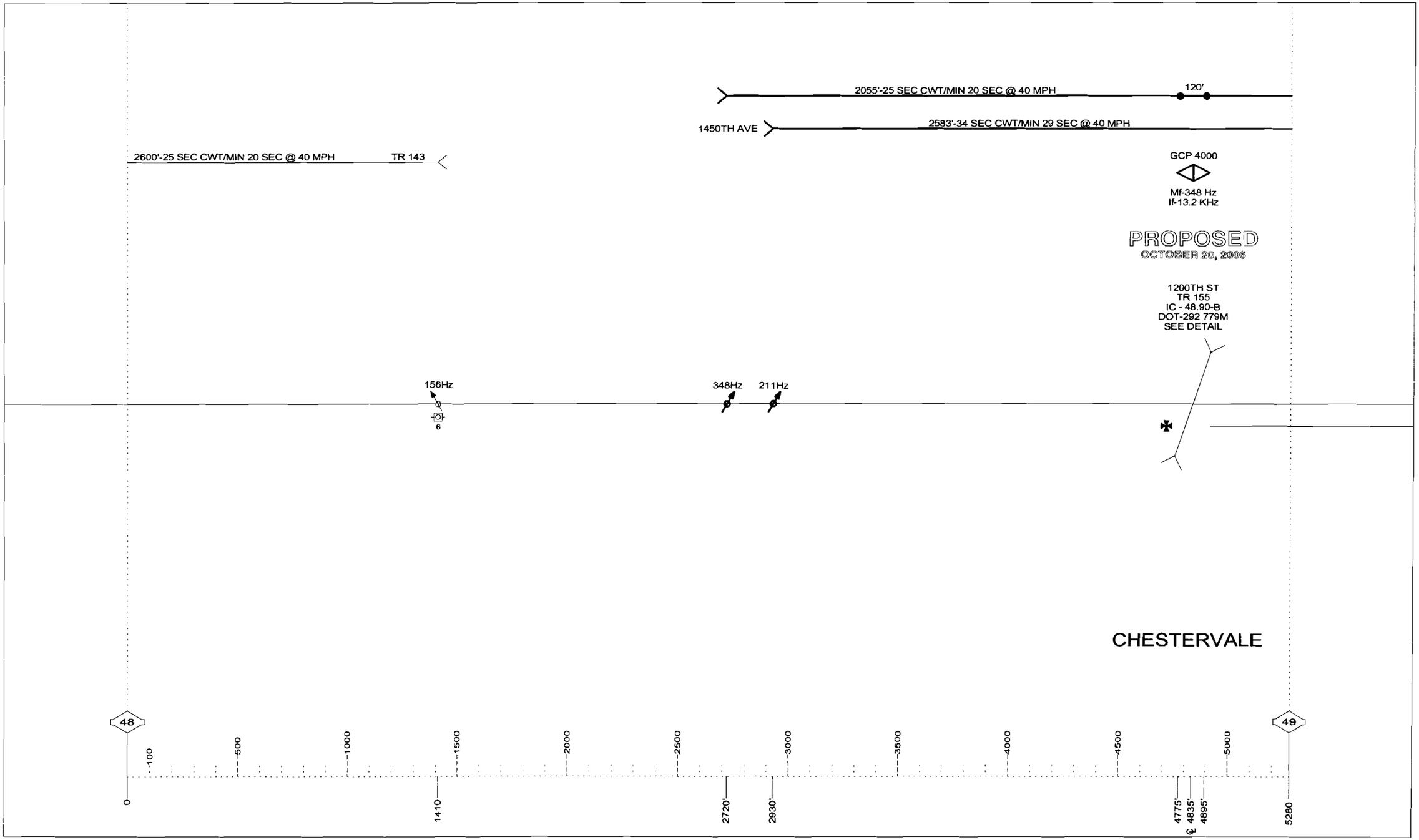


DRAWING SCALE 1" = 500'

11-9-00

# SD 1047 - MP 49 TO 50

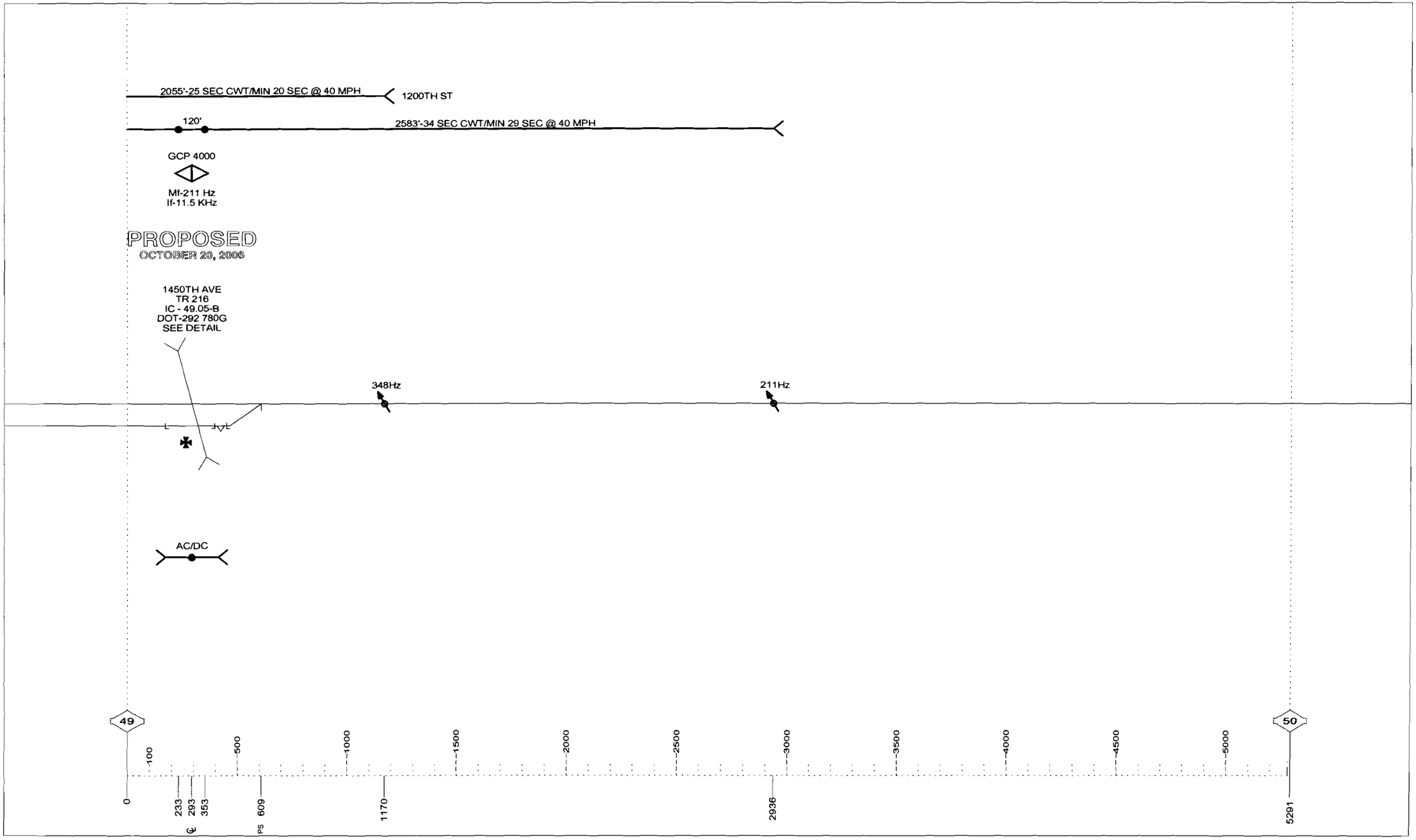


DRAWING SCALE 1" = 500'

| REVISIONS | | | | |
|---|---|---|---|---|
| NO. | DATE | BY | DESCRIPTION | APP. BY |
| 1 | | | | |
| 2 | | | | |
| 3 | | | | |
| 4 | | | | |
| 5 | | | | |

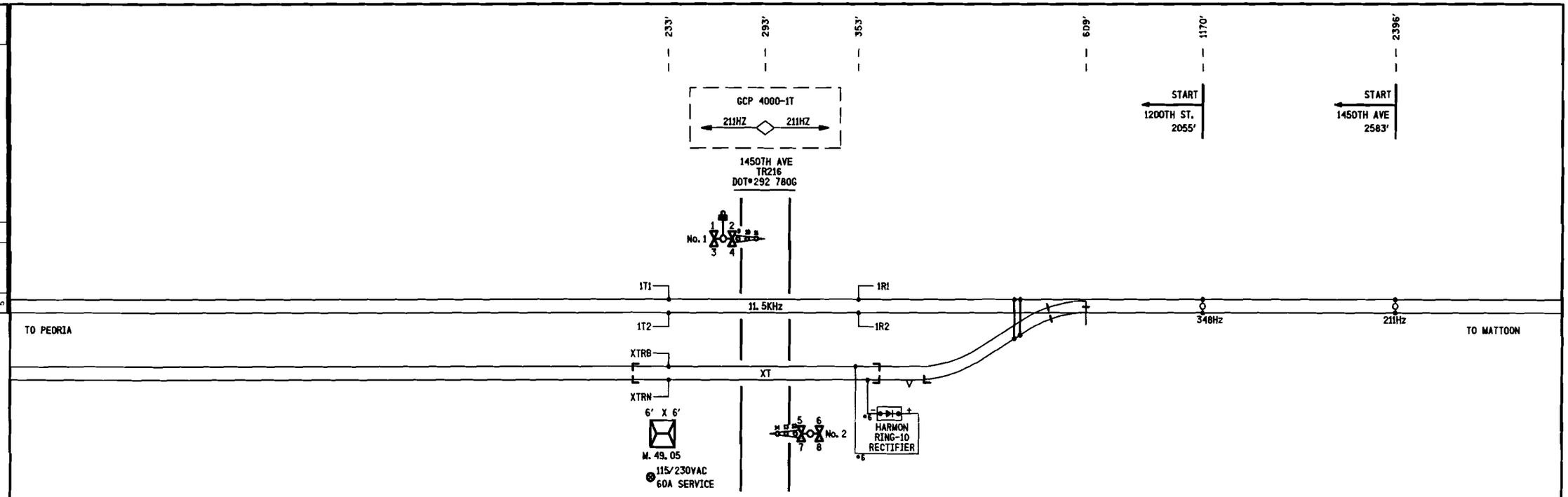


NOTE:

1) DENOTES MULTI-FREQ. NARROW BAND SHUNT 62775-1543

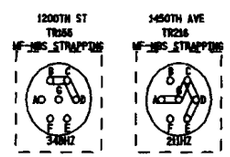


6' X 6' BUNGALOW

| PROPOSED | | | REVISIONS | D | C | COMPLETED | | | C |
|---|---|---|---|---|---|---|---|---|---|
| D | M | Y | | | | D | M | Y | |
| | | | | | | | | | |

PROPOSED
DES. No. _____
[redacted] YELLOW-OUT
AS INSTALLED
DATE _____
BY _____

DIVISION MIDWEST
SUB. PEORIA
SD. 1047 C
MP. 49.00 TO 49.60

SIGNALS AND COMMUNICATIONS
EDMONTON, ALBERTA

DES. LGY
CH. RLC

21 DECEMBER 2007

TRACK LAYOUT

1450TH AVE./TR216
CHESTERVALE, IL

M 04900C01

14

SAFETRAN SYSTEM CORP.
LOUISVILLE DIVISION, LOUISVILLE, KY

SAFETRAN SYSTEMS CORPORATION

| | | | |
|---|---|---|---|
| DES.: LGY | DATE: 12/21/07 | JOB NO.: P1CA10138 | |
| CKD.: RLC | ISSUE DATE: N/A | EST. NO.: N/A | |
| DRN.: LGY | PLAN NO.: N/A | SHEET N/A OF N/A | |
| P TIME: 14:09 | P DATE: 29-JAN-2008 | CAD ID.: 04900C01 | |

| NO. | DATE | BY | REVISIONS DESCRIPTION | APP. BY |
|---|---|---|---|---|
| 1 | | | | |
| 2 | | | | |
| 3 | | | | |
| 4 | | | | |
| 5 | | | | |

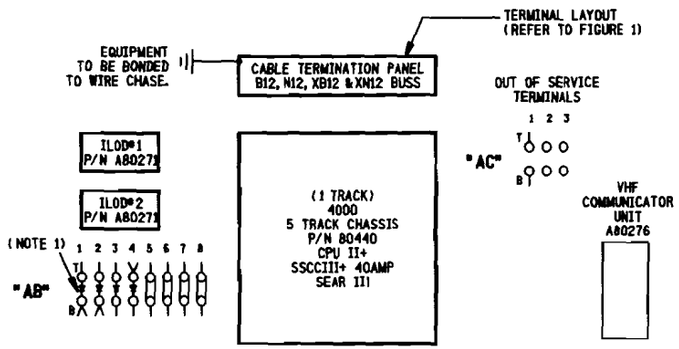


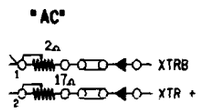


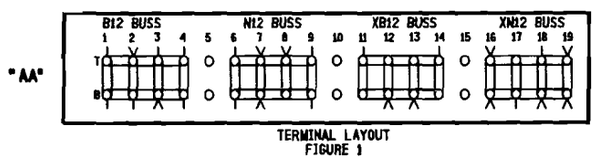


TERMINAL LAYOUT
FIGURE 1

FIGURE 1

NOTE:
1) ⊸ DENOTES RECTIFIER : (SAFETRAN# 8008A299006)

SIDE "A"

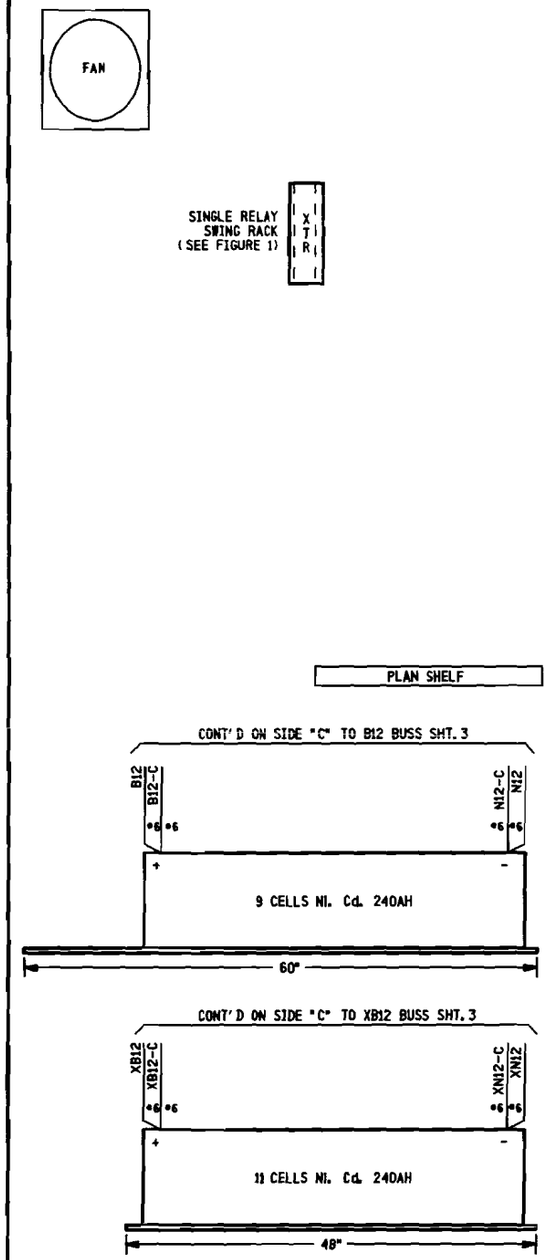


SIDE "B"

PROPOSED
DES. No. _____
[redacted] YELLOW-OUT
AS INSTALLED
DATE _____
BY _____

6' X 6' BUNGALOW

| PROPOSED | | | REVISIONS | D | C | COMPLETED | | | C |
|---|---|---|---|---|---|---|---|---|---|
| D | M | Y | | | | D | M | Y | |
| | | | | | | | | | |

DIVISION MIDWEST
SUB. PEORIA
SD. 1047 C
MP. 49.00 TO 49.60

SIGNALS AND COMMUNICATIONS
EDMONTON, ALBERTA
21 DECEMBER 2007

DES. LGY
CH. RLC

BUNGALOW LAYOUT
SIDE "A" & "B"
145OTH AVE./TR216
CHESTERVALE, IL

M 04900C02

SAFETRAN SYSTEM CORP.
LOUISVILLE DIVISION, LOUISVILLE, KY

SAFETRAN SYSTEMS CORPORATION

| | | | |
|---|---|---|---|
| DES. : LGY | DATE: 12/21/07 | JOB NO. : P1CA10138 | |
| CKD. : RLC | ISSUE DATE: N/A | EST. NO. : N/A | |
| DRN. : LGY | PLAN NO. : N/A | SHEET N/A OF N/A | |
| P. TIME: 14:09 | P. DATE: 29-JAN-2008 | CAD ID. : 04900C02 | |

| NO. | DATE | BY | REVISION DESCRIPTION | APP. | BY |
|---|---|---|---|---|---|
| 1 | | | | | |
| 2 | | | | | |
| 3 | | | | | |
| 4 | | | | | |
| 5 | | | | | |

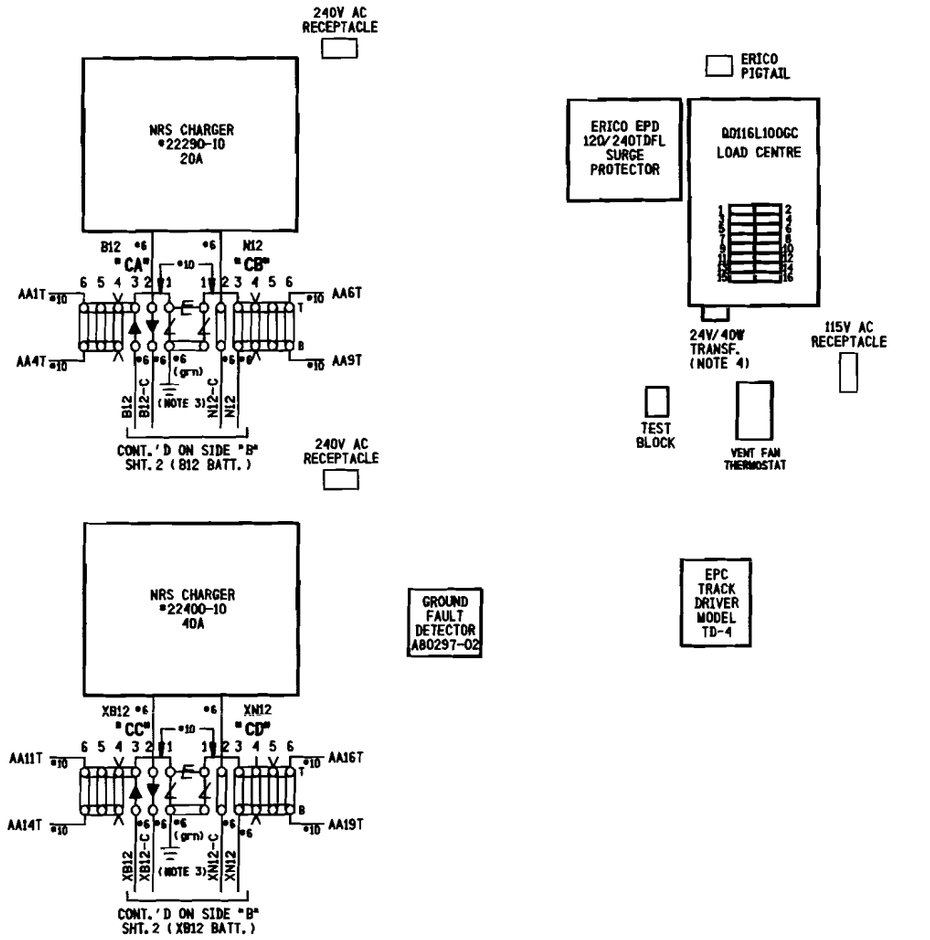


NOTES:

1) # DENOTES EQUALIZER TYPE: (SAFETRAN #022700-1X)
2) ⊤ DENOTES LIGHTNING ARRESTER TYPE: (SAFETRAN #022585-1X)
3) SURGE PROTECTION SHOULD BE BONDED TO BUNGALOW.
4) 24V-40W TRANSFORMER (CN STOCK #02-45-367)

SIDE "C"

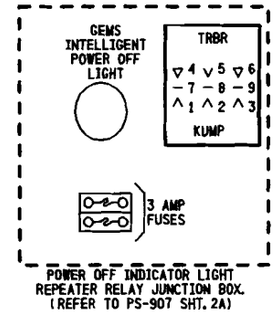


PROPOSED
DES. No. _____
[redacted] YELLOW-OUT
AS INSTALLED
DATE _____
BY _____

SIDE "D"
ABOVE ENTRY DOOR

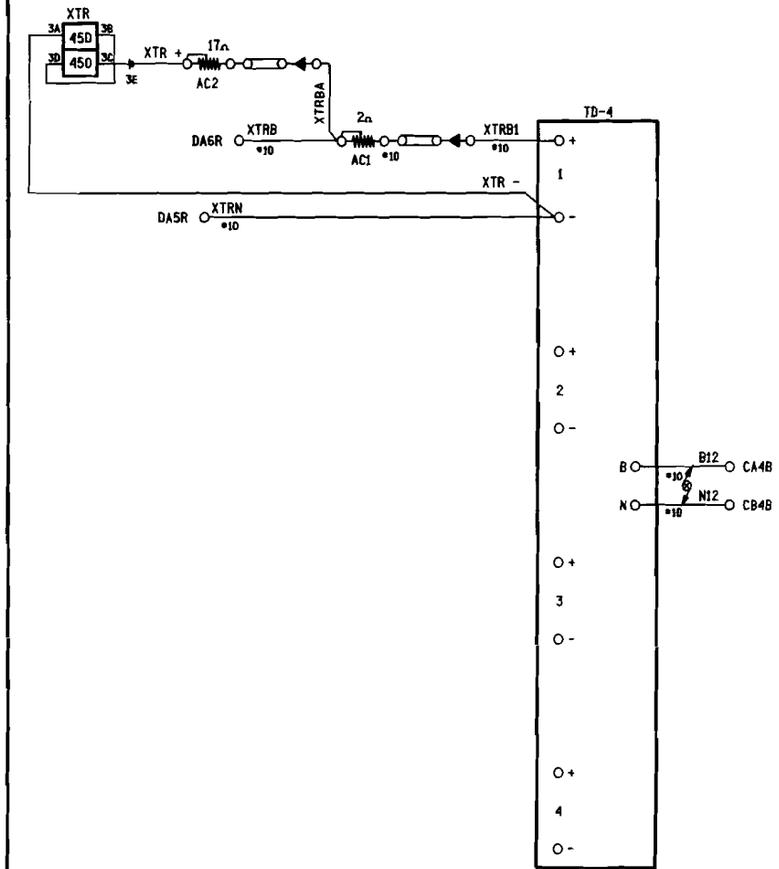


NOTE:

1) ALL WIRING TO BE 16 AWG UNLESS OTHERWISE NOTED

6' X 6' BUNGALOW

| PROPOSED D | PROPOSED M | PROPOSED Y | REVISIONS | D | C | COMPLETED D | COMPLETED M | COMPLETED Y | C |
|---|---|---|---|---|---|---|---|---|---|
| | | | | | | | | | |

DIVISION MIDWEST
SUB. PEORIA
SD. 1047 C
MP. 49.00 TO 49.60

SIGNALS AND COMMUNICATIONS EDMONTON, ALBERTA — DES. LGY
21 DECEMBER 2007 — CH. RLC

BUNGALOW LAYOUT
SIDE "C" & OVER DOOR SIDE "D"
1450TH AVE./TR216
CHESTERVALE, IL

M 04900C03

SAFETRAN SYSTEMS CORPORATION

| | | | |
|---|---|---|---|
| DES.: LGY | DATE: 12/21/07 | JOB NO.: P1CA10138 | |
| CKD.: RLC | ISSUE DATE: N/A | EST. NO.: N/A | |
| DRN.: LGY | PLAN NO.: N/A | SHEET N/A OF N/A | |
| P TIME: 14:09 | P DATE: 29-JAN-2008 | CAD ID.: 04900C03 | |

SAFETRAN SYSTEM CORP.
LOUISVILLE DIVISION, LOUISVILLE, KY

| NO. | DATE | BY | DESCRIPTION | APP. BY |
|---|---|---|---|---|
| 1 | | | | |
| 2 | | | | |
| 3 | | | | |
| 4 | | | | |
| 5 | | | | |

REVISIONS

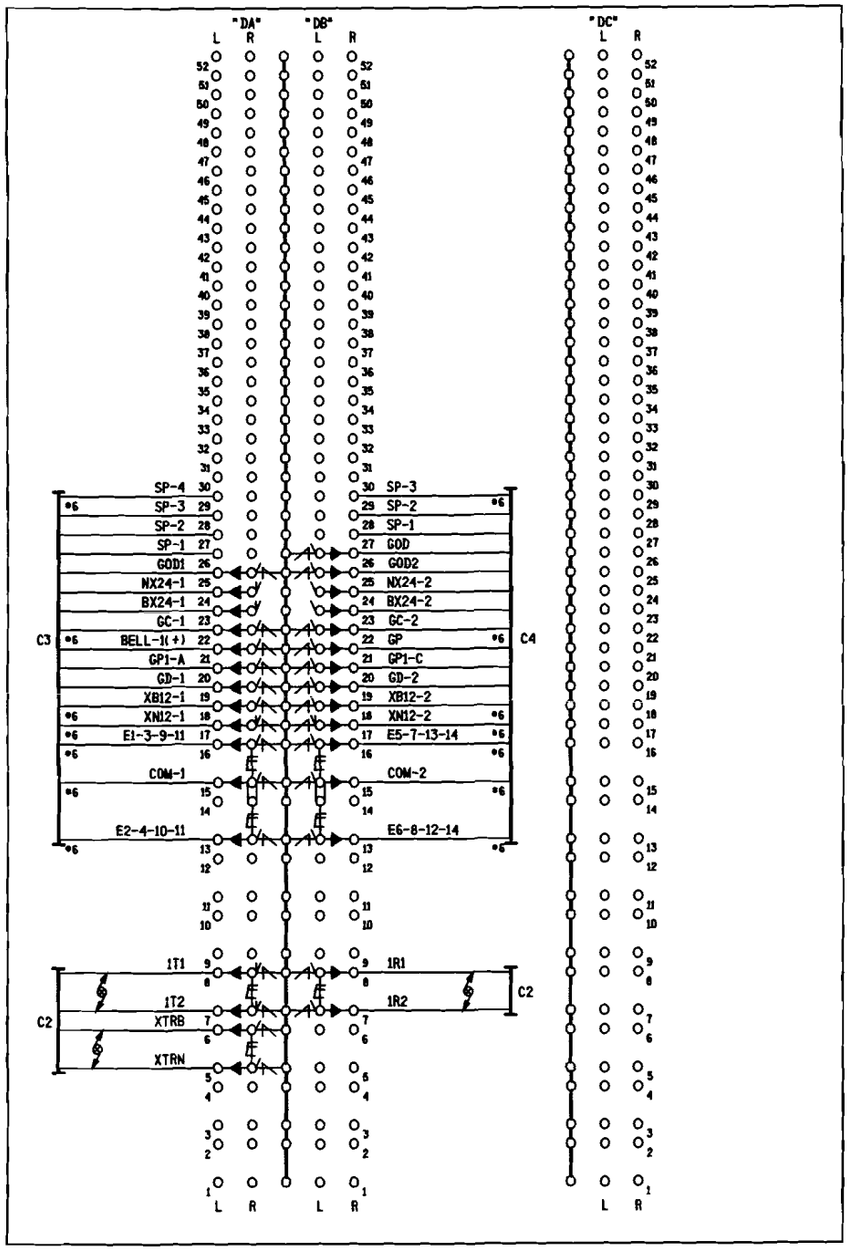


SIDE "D" (INSIDE)

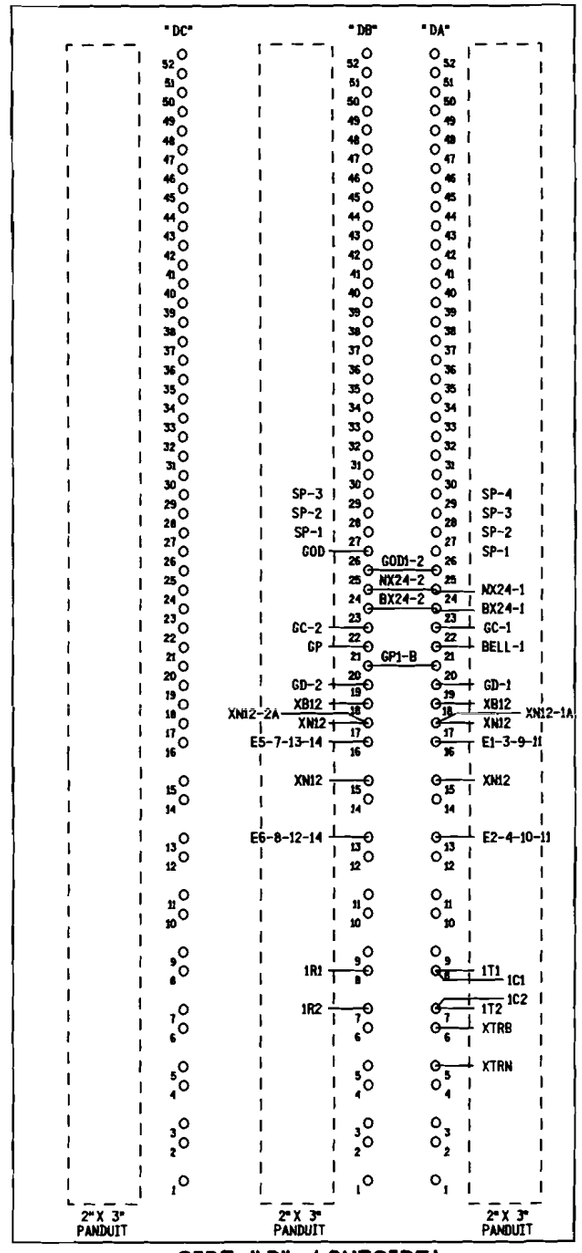


SIDE "D" (OUTSIDE)

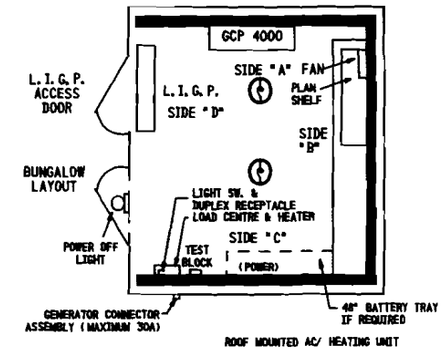


CABLE CONSIST:

C1-3C*6 TECK 90 U/G TO MAIN SERVICE
C2-(3)-2SC*6 TW. TO TRACK
C3-16C (7*6, 9*14) TO GATE (SIG.*1)
C4-16C (7*6, 9*14) TO GATE (SIG.*2)

NOTES:

1) DENOTES LIGHTNING ARRESTER TYPE:(SAFETRAN *022585-1X)
2) DENOTES EQUALIZER TYPE:(SAFETRAN *022700-1X)
3) DENOTES TWISTED PAIR.
4) ENSURE DOUBLE NUTTING OF ALL TERMINALS.

PROPOSED
DES. No. _____
YELLOW-OUT
AS INSTALLED
DATE _____
BY _____

6' X 6' BUNGALOW

| PROPOSED D | M | Y | REVISIONS | D | C | COMPLETED D | M | Y | C |
|---|---|---|---|---|---|---|---|---|---|
| | | | | | | | | | |

DIVISION MIDWEST
SUB. PEORIA
SD. 1047 C
MP. 49.00 TO 49.60

SIGNALS AND COMMUNICATIONS
EDMONTON, ALBERTA
21 DECEMBER 2007

DES. LGY
CH. RLC

BUNGALOW LAYOUT SIDE "D"
LOW IMPEDANCE GROUND PLANE
1450TH AVE./TR216
CHESTERVALE, IL

M 04900C04

SAFETRAN SYSTEM CORP.
LOUISVILLE DIVISION, LOUISVILLE, KY

SAFETRAN SYSTEMS CORPORATION

| | | | |
|---|---|---|---|
| DES.: LGY | DATE: 12/21/07 | JOB NO.: P1CA10138 | |
| CKD.: | ISSUE DATE: N/A | EST. NO.: N/A | |
| DRN.: LGY | PLAN NO.: N/A | SHEET N/A OF N/A | |
| P TIME: 14:09 | P DATE: 29-JAN-2008 | CAD ID.: # 04900C04 | |

| NO. | DATE | BY | DESCRIPTION | APP. BY |
|---|---|---|---|---|
| 1 | | | | |
| 2 | | | | |
| 3 | | | | |
| 4 | | | | |
| 5 | | | | |

REVISIONS

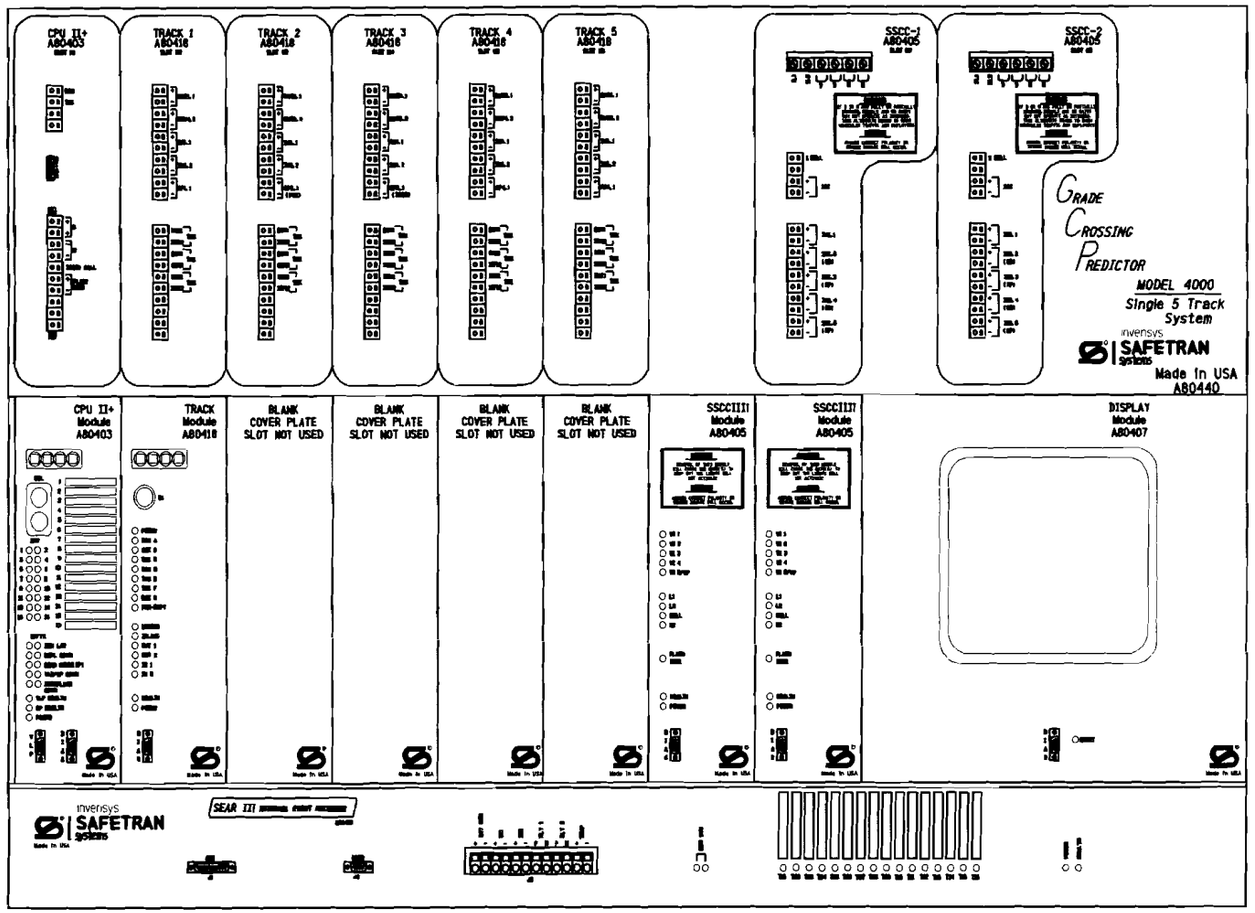


NOTE:

1) DISABLE THE DISPLAY HEATER BY REMOVING JUMPER J-22 (LOCATED AT THE EDGE OF THE DISPLAY MODULE CARD THAT PLUGS INTO THE CHASSIS).

## ATTENTION!

ENSURE THE DISPLAY MODULE HEATER IS DISABLED. LEAVING THE DISPLAY HEATER ENABLE WILL REDUCE THE AMOUNT OF BATTERY STANDBY TIME IN THE EVENT OF AN AC POWER FAILURE.

HEATER FUNCTION IS
JUMPER SELECTABLE ON
THE DISPLAY MODULE BOARD.
THREE OPTIONS ARE AVAILABLE.
NORMAL LCD HTR (DEFAULT)
HI CURRENT
NO JUMPER (HEATER DISABLED)

PROPOSED
DES. No. _____
RED-IN YELLOW-OUT
AS INSTALLED
DATE _____
BY _____

6' X 6' BUNGALOW

| PROPOSED D | M | Y | REVISIONS | D | C | COMPLETED D | M | Y | C |
|---|---|---|---|---|---|---|---|---|---|
| | | | | | | | | | |

DIVISION MIDWEST
SUB. PEORIA
SD. 1047 C
MP. 49.00 TO 49.60
CN

SIGNALS AND COMMUNICATIONS EDMONTON, ALBERTA | DES. LGY
21 DECEMBER 2007 | CH. RLC

GCP 4000 NON REDUNDANT
5 TRK CHASSIS & MOD. LAYOUT
145OTH AVE./TR216
CHESTERVALE, IL

M 04900C05

SAFETRAN SYSTEM CORP.
LOUISVILLE DIVISION, LOUISVILLE, KY

SAFETRAN SYSTEMS CORPORATION

| | | |
|---|---|---|
| DES.: LGY | DATE: 12/21/07 | JOB NO.: P1CA10138 |
| CKD.: RLC | ISSUE DATE: N/A | EST. NO.: N/A |
| DRN.: LGY | PLAN NO.: N/A | SHEET N/A OF N/A |
| P TIME: 14:09 | P DATE: 29-JAN-2008 | CAD ID.: 04900C05 |

| NO. | DATE | BY | REVISIONS DESCRIPTION | APP. BY |
|---|---|---|---|---|
| 1 | | | | |
| 2 | | | | |
| 3 | | | | |
| 4 | | | | |
| 5 | | | | |

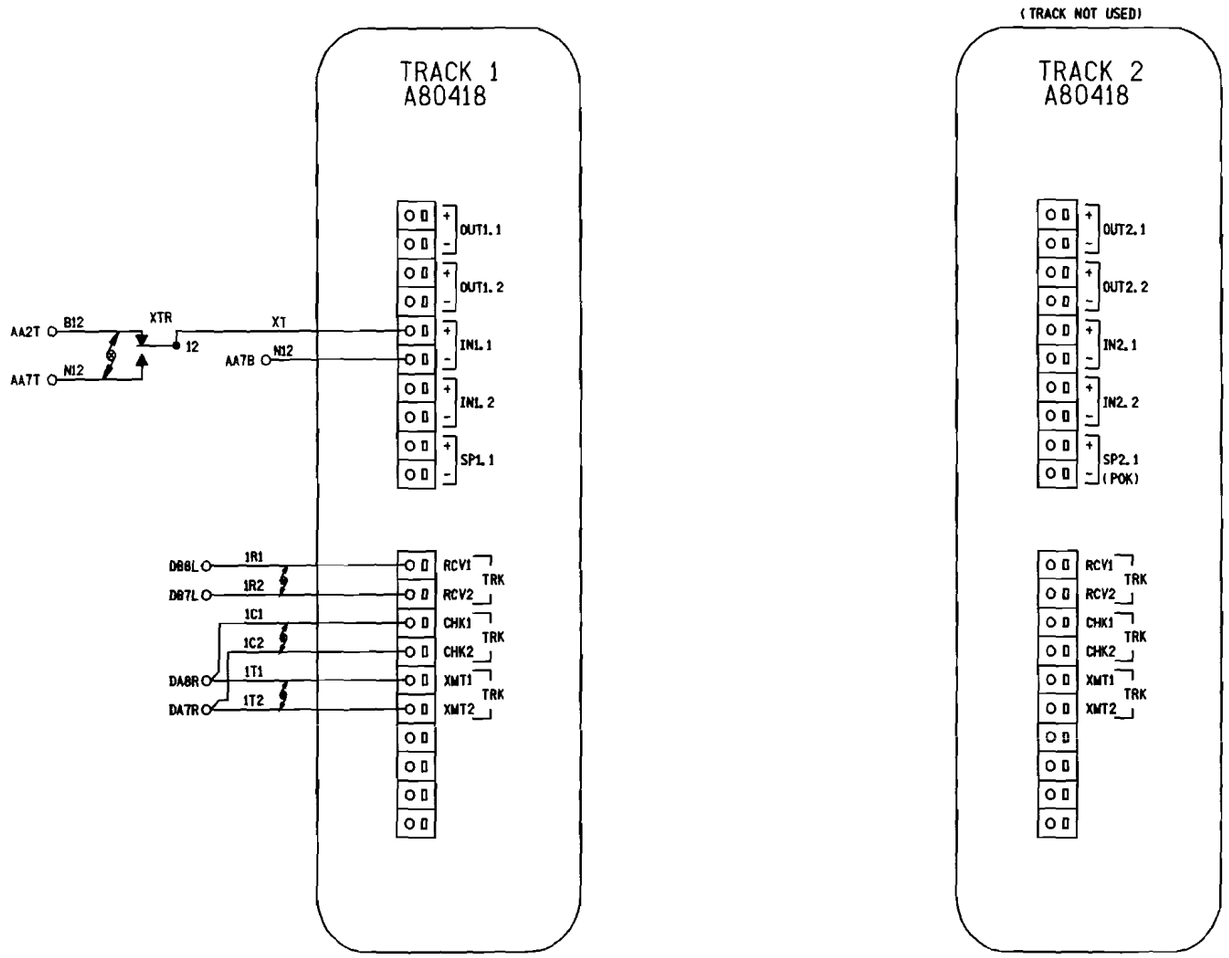


NOTES:

1) ALL WIRING #16 AWG MINIMUM UNLESS OTHERWISE NOTED. WIRE SIZES SHOWN ARE MINIMUM GAUGE.

2) DENOTES TWISTED PAIR.

PROPOSED
DES. No. _____
RED-IN YELLOW-OUT
AS INSTALLED
DATE _____
BY _____

6' X 6' BUNGALOW

| PROPOSED D | M | Y | REVISIONS | D | C | COMPLETED D | M | Y | C |
|---|---|---|---|---|---|---|---|---|---|
| | | | | | | | | | |

DIVISION MIDWEST
SUB. PEORIA
SD. 1047 C
MP. 49.00 TO 49.60

SIGNALS AND COMMUNICATIONS
EDMONTON, ALBERTA

DES. LGY
CH. RLC

21 DECEMBER 2007

6CP 4000 NON REDUNDANT
TRACK CONNECTIONS
145OTH AVE./TR216

CHESTERVALE, IL

M 04900C06

SAFETRAN SYSTEMS CORPORATION

| | |
|---|---|
| DES.: LGY | DATE: 12/21/07 |
| CKD.: RLC | ISSUE DATE: N/A |
| DRN.: LGY | PLAN NO.: N/A |
| P. TIME: 14:09 | P. DATE: 29-JAN-2008 |
| JOB NO.: PICA10138 | |
| EST. NO.: N/A | |
| SHEET N/A OF N/A | |
| CAD ID.: 04900C06 | |

SAFETRAN SYSTEM CORP.
LOUISVILLE DIVISION, LOUISVILLE, KY

| NO. | DATE | BY | REVISIONS DESCRIPTION | APP. BY |
|---|---|---|---|---|
| 1 | | | | |
| 2 | | | | |
| 3 | | | | |
| 4 | | | | |
| 5 | | | | |

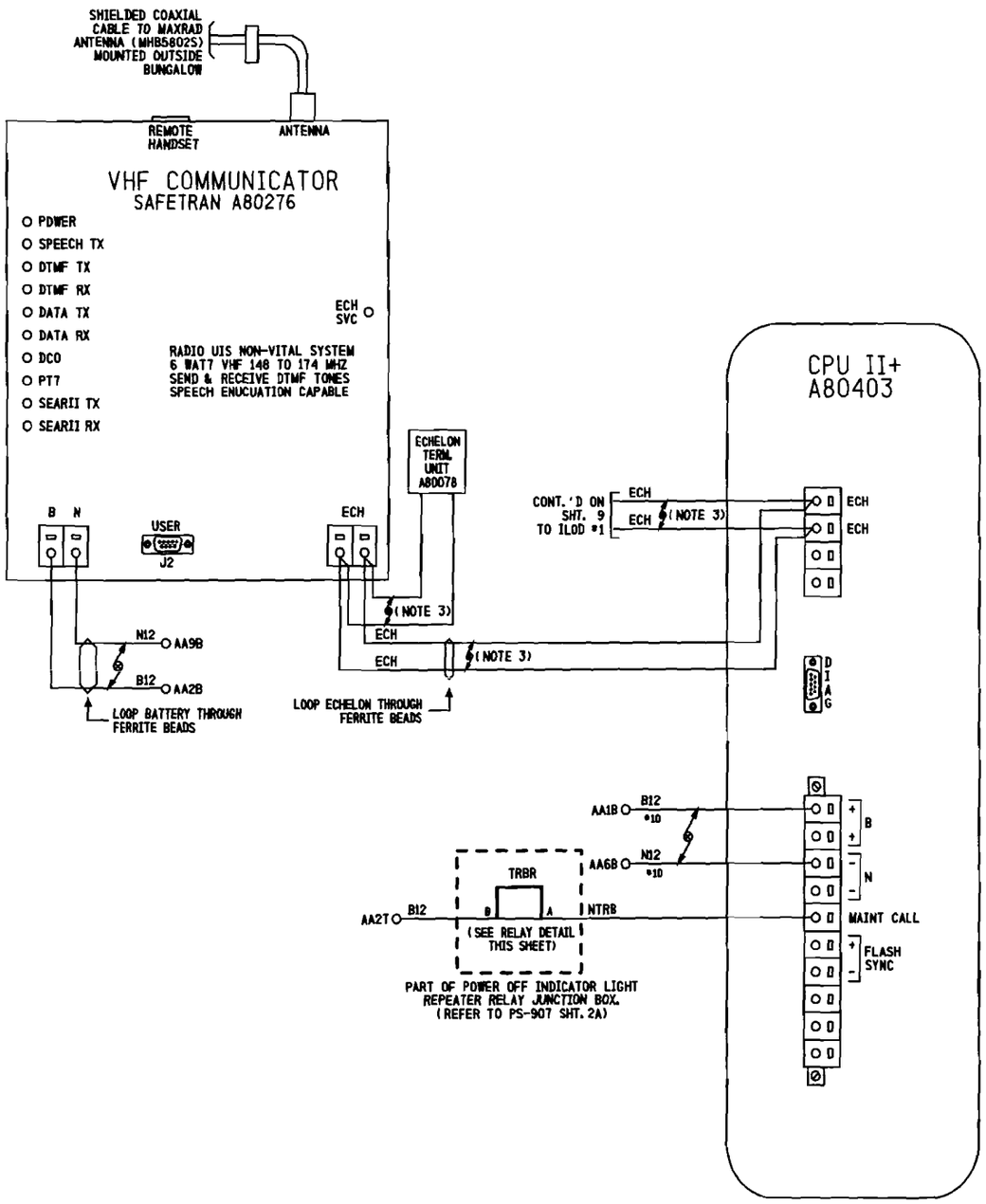


RELAY DETAIL

RELAY - POTTER & BRUMFIELD
MODEL KUMP-14D18-12 SOCKET MOUNTABLE
12 VDC W/ 3 FORM C CONTACTS.

SOCKET - SCREW TERMINAL
MODEL 27E121.

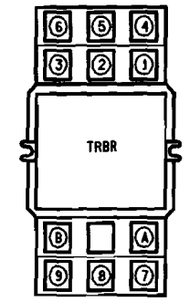


LOCATED OVER ENTRY DOOR

RELAY WIRING DIAGRAM (REAR VIEW)

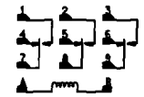


NOTE:
SOCKET NUMBERING CORRESPONDS DIRECTLY WITH RELAY NUMBERING.
(COIL SHOWN ENERGIZED)

NOTES:

1) ALL WIRING #16 AWG UNLESS OTHERWISE NOTED.
2) ∮ DENOTES TWISTED PAIR.
3) USE BELDEN CABLE, PART #8461-u500-60 FOR ALL ECHELON AND LAN WIRING.

PROPOSED
DES. No. _____
RED-IN YELLOW-OUT
AS INSTALLED
DATE _____
BY _____

6' X 6' BUNGALOW

| PROPOSED D | M | Y | REVISIONS | D | C | COMPLETED D | M | Y | C |
|---|---|---|---|---|---|---|---|---|---|
| | | | | | | | | | |

DIVISION MIDWEST
SUB. PEORIA
SD. 1047 C
MP. 49.00 TO 49.60

SIGNALS AND COMMUNICATIONS
EDMONTON, ALBERTA
21 DECEMBER 2007

DES. LGY
CH. RLC

SAFETRAN INTERNAL EVENT ANALYZER
CPUII+ & VHF COMMUNICATOR
1450TH AVE./TR216
CHESTERVALE, IL

M 04900C07

SAFETRAN SYSTEM CORP.
LOUISVILLE DIVISION, LOUISVILLE, KY

SAFETRAN SYSTEMS CORPORATION

| | |
|---|---|
| DES. : LGY | DATE: 12/21/07 |
| CKD. : RLC | ISSUE DATE: N/A |
| DRN. : LGY | PLAN NO. : N/A |
| P. TIME: 14:09 | P. DATE: 29-JAN-2008 |

| | |
|---|---|
| JOB NO. : PICA10138 | |
| EST. NO. : | |
| SHEET N/A OF N/A | |
| CAD ID. : 04900C07 | |

| NO. | DATE | BY | REVISIONS DESCRIPTION | APP. BY |
|---|---|---|---|---|
| 1 | | | | |
| 2 | | | | |
| 3 | | | | |
| 4 | | | | |
| 5 | | | | |

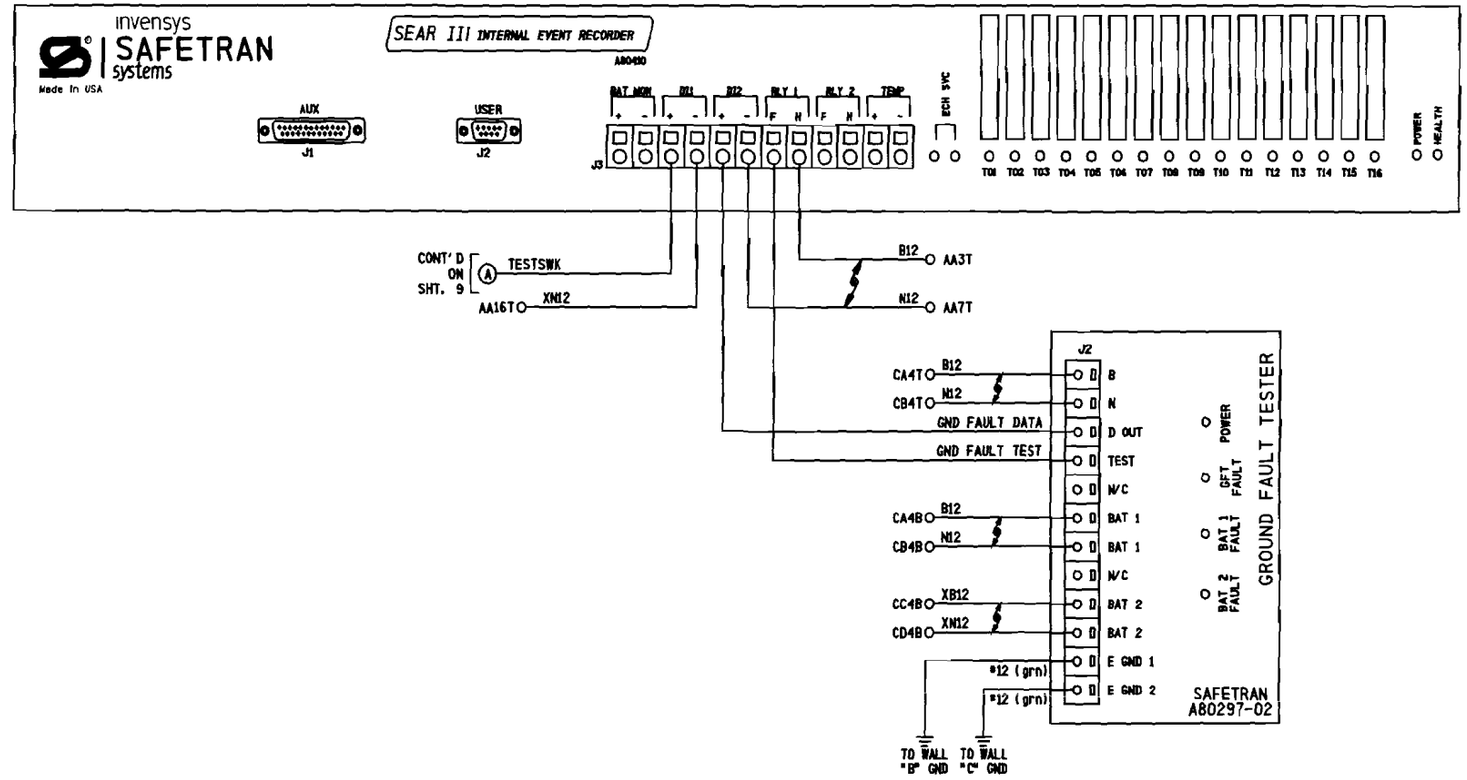


PROPOSED
DES. No. _____
RED-IN YELLOW-OUT
AS INSTALLED
DATE _____
BY _____

NOTES:

1) ALL WIRING #16 AWG UNLESS OTHERWISE NOTED.

2) DENOTES TWISTED PAIR.

6' X 6' BUNGALOW

| PROPOSED D | M | Y | REVISIONS | D | C | COMPLETED D | M | Y | C |
|---|---|---|---|---|---|---|---|---|---|
| | | | | | | | | | |

DIVISION MIDWEST
SUB. PEORIA
SD. 1047 C
MP. 49.00 TO 49.60

SIGNALS AND COMMUNICATIONS
EDMONTON, ALBERTA

DES. LGY
CH. RLC

21 DECEMBER 2007

SAFETRAN INTERNAL EVENT ANALYZER
SEARIII WITH GFT
1450TH AVE./TR216
CHESTERVALE, IL

M 04900C08

SAFETRAN SYSTEM CORP.
LOUISVILLE DIVISION, LOUISVILLE, KY

SAFETRAN SYSTEMS CORPORATION

| | | | |
|---|---|---|---|
| DES.: LGY | DATE: 12/21/07 | JOB NO.: P1CA10138 | |
| CKD.: RLC | ISSUE DATE: N/A | EST. NO.: | |
| DRN.: LGY | PLAN NO.: N/A | SHEET N/A OF N/A | |
| P. TIME: 14:09 | P. DATE: 29-JAN-2008 | CAD ID.: 04900C08 | |

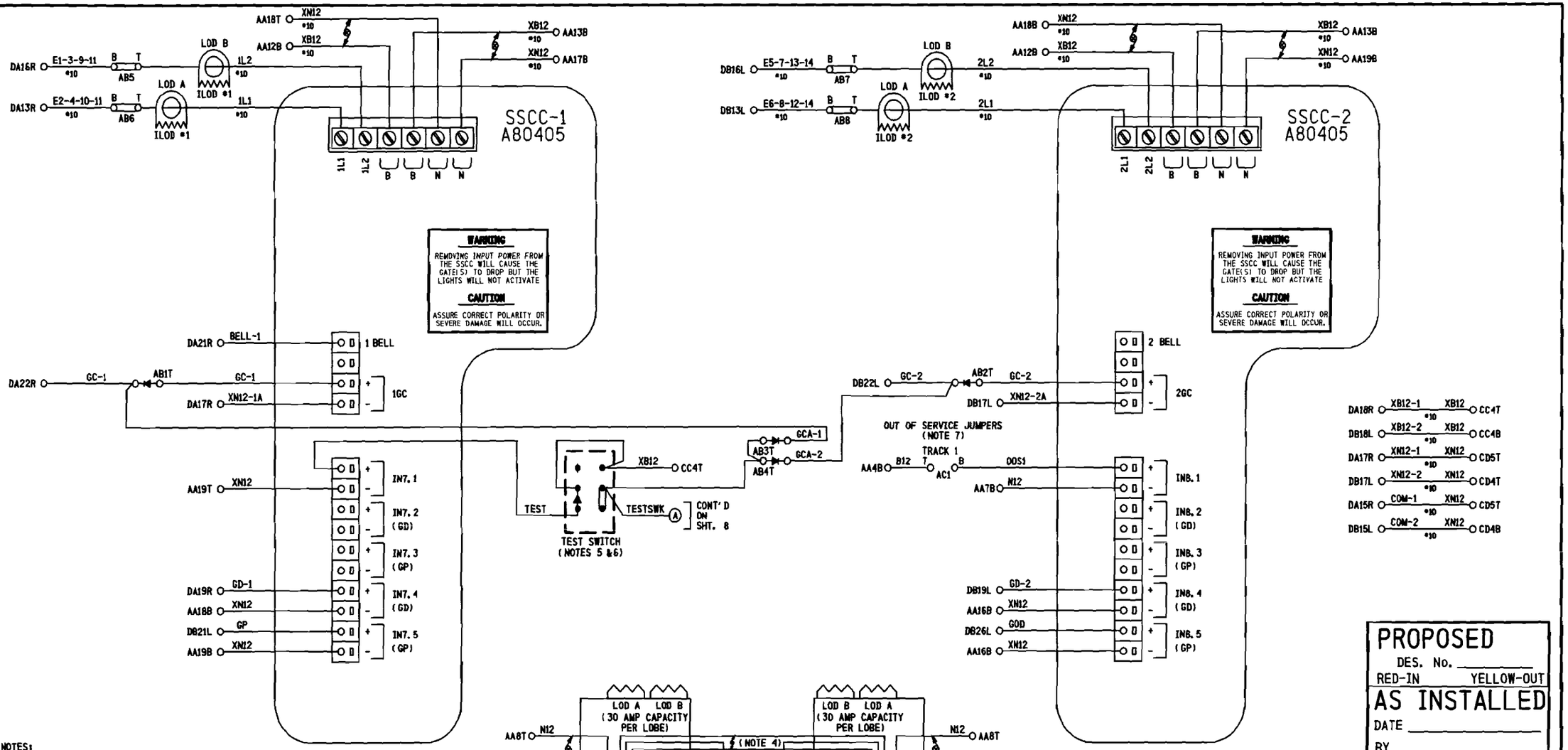


NOTES:

1) DENOTES RECTIFIER : (SAFETRAN #8008A299006)

2) DENOTES TWISTED PAIR.

3) ALL WIRING TO BE #16 AWG MINIMUM UNLESS OTHERWISE NOTED.

4) USE BELDEN CABLE, PART #8461-u500-60 FOR ALL ECHELON AND LAN WIRING.

5) MULTI-UNIT TERMINAL BLOCK

6) IF LINK IS CONNECTED BETWEEN XB12 AND TESTSWK TERMINAL GATES WILL REMAIN IN UP POSTION.

7) TO TAKE TRACK 1 (T1) OUT OF SERVICE, JUMPER AC1T TO AC1B

PROPOSED
DES. No. _____
RED-IN YELLOW-OUT
AS INSTALLED
DATE _____
BY _____

6' X 6' BUNGALOW

| PROPOSED D | M | Y | REVISIONS | D | C | COMPLETED D | M | Y | C |
|---|---|---|---|---|---|---|---|---|---|
| | | | | | | | | | |

DIVISION MIDWEST
SUB. PEORIA
SD. 1047 C
MP. 49.00 TO 49.60

SIGNALS AND COMMUNICATIONS EDMONTON, ALBERTA | DES. LGY
21 DECEMBER 2007 | CH. RLC

GCP 4000 SSCC3+ MODULE
ISOLATED GATE 40AMP CONTROLLER
145OTH AVE./TR216
CHESTERVALE, IL

M 04900C09

SAFETRAN SYSTEM CORP.
LOUISVILLE DIVISION, LOUISVILLE, KY

| NO. | DATE | BY | DESCRIPTION | APP. BY |
|---|---|---|---|---|
| 1 | | | | |
| 2 | | | | |
| 3 | | | | |
| 4 | | | | |
| 5 | | | | |

REVISIONS

SAFETRAN SYSTEMS CORPORATION

| | | |
|---|---|---|
| DES. : LGY | DATE: 12/21/07 | JOB NO. : PTCA10138 |
| CKD. : RLC | ISSUE DATE: N/A | EST. NO. : N/A |
| DRN. : LGY | PLAN NO. : N/A | SHEET N/A OF N/A |
| P. TIME: 14:09 | P. DATE: 29-JAN-2008 | CAD ID. : 04900C09 |

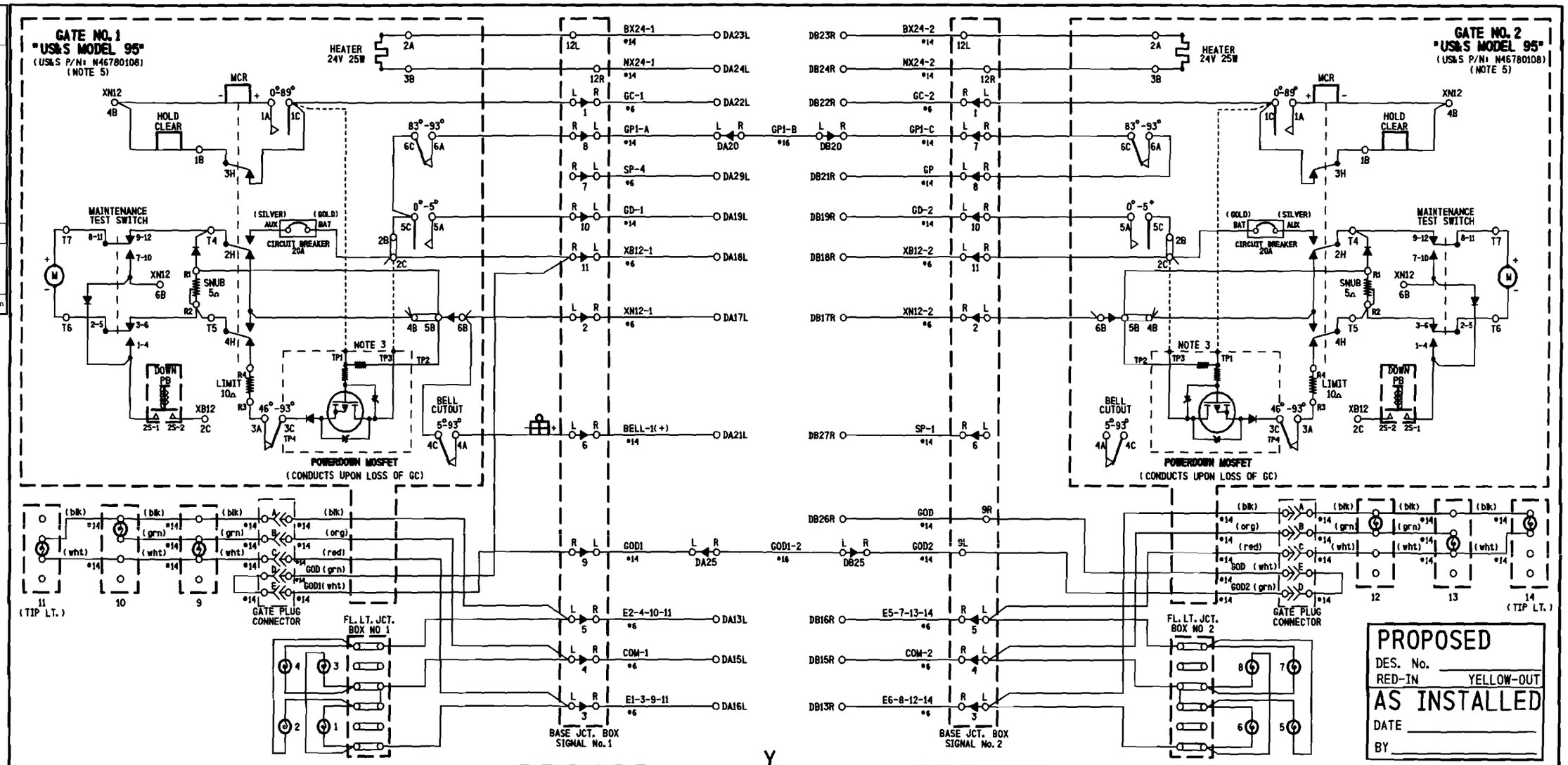


NOTES:

1) ON GATE No. 1 ADD STRAP BETWEEN TERMINAL 2B & 2C
ADD JUMPER BETWEEN TERMINAL 2B & 5C
AND BETWEEN TERMINAL 5C & 6C.
2) ON GATE No. 2 ADD STRAP BETWEEN TERMINAL 2B & 2C
ADD JUMPER BETWEEN TERMINAL 2B & 5C
AND CONNECT GP AS SHOWN.
3) POWERDOWN PCB TERMINALS TP1, TP3 & TP4 FIT
OVER TERMINALS 1C, 2C & 3C RESPECTIVELY.
4) ALL WIRING #10 AWG MINIMUM UNLESS
OTHERWISE NOTED. WIRE SIZES SHOWN
ARE MINIMUM GAUGE.
5) GATE DESCENT TIME (RELEASE FROM VERTICAL TO FULLY
HORIZONTAL) TO BE WITHIN 11 SECONDS.
6) ENSURE ALL TERMINALS HAVE TWO SHOULDER NUTS.
7) FOR GATE(S) THAT HAS BELL, ADD JUMPER BETWEEN 4C AND 6B.

| NO. | DATE | BY | DESCRIPTION | APP. BY |
|---|---|---|---|---|
| 1 | | | | |
| 2 | | | | |
| 3 | | | | |
| 4 | | | | |
| 5 | | | | |

REVISIONS

SAFETRAN SYSTEMS CORPORATION

| | | | |
|---|---|---|---|
| DES. : LGY | DATE: 12/21/07 | JOB NO. : PICA10138 | |
| CKD. : RLC | ISSUE DATE: N/A | EST. NO. : N/A | |
| DRN. : LGY | PLAN NO. : N/A | SHEET N/A OF N/A | |
| P. TIME: 14:09 | P. DATE: 29-JAN-2008 | CAD ID. : 04900C10 | |

PROPOSED
DES. No. _____
RED-IN YELLOW-OUT
AS INSTALLED
DATE _____
BY _____

| PROPOSED | | | REVISIONS | D | C | COMPLETED | | | C |
|---|---|---|---|---|---|---|---|---|---|
| D | M | Y | | | | D | M | Y | |
| | | | | | | | | | |

DIVISION MIDWEST
SUB. PEORIA
SD. 1047 C
MP. 49.00 TO 49.60

SIGNALS AND COMMUNICATIONS EDMONTON, ALBERTA — DES. LGY
21 DECEMBER 2007 — CH. RLC

GATE MECHANISM CONTROL CIRCUITS

1450TH AVE./TR216
CHESTERVALE, IL

M 04900C10

SAFETRAN SYSTEM CORP.
LOUISVILLE DIVISION, LOUISVILLE, KY

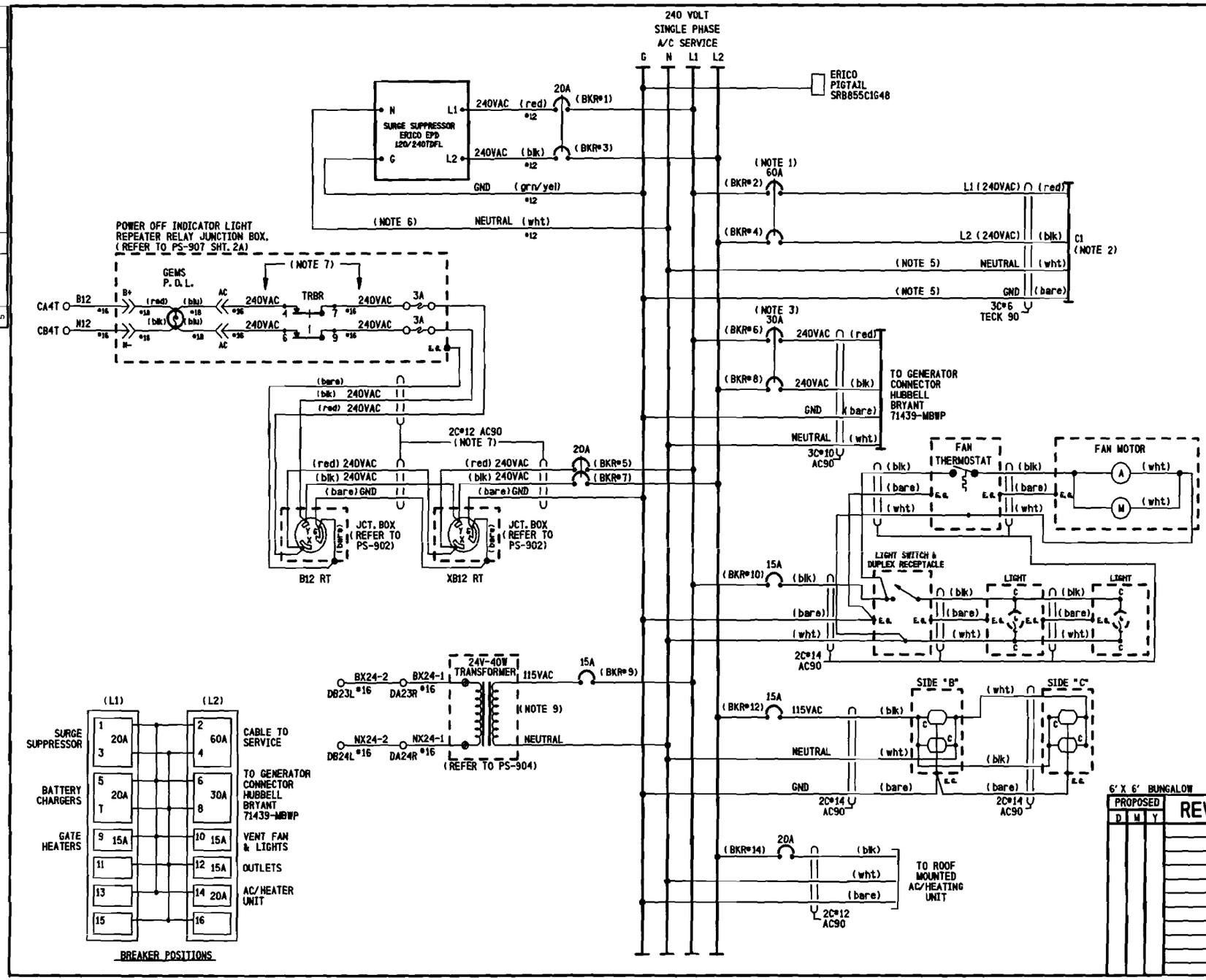


NOTES:

1) CIRCUIT BREAKER NOT TO EXCEED 60 AMPERES. RETAINING KIT PK4MB2LA MUST BE USED WITH 60A BREAKER.
2) FEEDER CIRCUIT BREAKER, AT STUB POLE SERVICE PANEL, NOT TO EXCEED 60 AMPERES.
3) A SWITCH TRANSFER KIT MUST BE INSTALLED BETWEEN THE SERVICE DISCONNECT BREAKER AND THE GENERATOR HOOK UP.
4) WHERE SEPARATE GROUND WIRE EXISTS BETWEEN THE SERVICE AND THE LOAD CENTER, REMOVE THE BRASS COLORED BONDING SCREW. (REFER TO SCHEMATIC ON BOX COVER FOR EXACT LOCATION)
5) S.C. #6 STRANDED, CSA TYPE R90 (X-LINK)
6) KEEP LEADS AS SHORT AS POSSIBLE
7) THE WHITE CONDUCTOR MUST BE MADE PERMANENTLY UNIDENTIFIABLE BY TAPING THIS CONDUCTOR RED. TAPING MUST BE CONTINUOUS WHERE THE SEPARATE CONDUCTORS HAVE BEEN MADE ACCESSIBLE AND VISIBLE.
8) « DENOTES WAGO TERMINAL
9) 24 VOLT - 40 WATT TRANSFORMER (CN STOCK #02-45-367)

| NO. | DATE | BY | REVISIONS | APP. BY |
|---|---|---|---|---|
| 1 | | | | |
| 2 | | | | |
| 3 | | | | |
| 4 | | | | |
| 5 | | | | |

SAFETRAN SYSTEMS CORPORATION

| | | | |
|---|---|---|---|
| DES. : LGY | DATE: 12/21/07 | JOB NO.: P1CA10138 | |
| CKD. : RLC | ISSUE DATE: N/A | EST. NO. : N/A | |
| DRN. : LGY | PLAN NO. : N/A | SHEET N/A OF N/A | |
| P. TIME: 14:09 | P. DATE: 29-JAN-2008 | CAD ID.: 04900C11 | |

PROPOSED
DES. No. _____
RED-IN YELLOW-OUT
AS INSTALLED
DATE _____
BY _____

6' X 6' BUNGALOW

| PROPOSED D | M | Y | REVISIONS | D | C | COMPLETED D | M | Y | C |
|---|---|---|---|---|---|---|---|---|---|
| | | | | | | | | | |

DIVISION MIDWEST
SUB. PEORIA
SD. 1047 C
MP. 49.00 TO 49.60

SIGNALS AND COMMUNICATIONS
EDMONTON, ALBERTA

DES. LGY
CH. RLC

21 DECEMBER 2007

POWER DISTRIBUTION

1450TH AVE./TR216

CHESTERVALE, IL

M 04900C11

SAFETRAN SYSTEM CORP.
LOUISVILLE DIVISION, LOUISVILLE, KY

| NO. | DATE | BY | REVISIONS DESCRIPTION | APP. BY |
|---|---|---|---|---|
| 1 | | | | |
| 2 | | | | |
| 3 | | | | |
| 4 | | | | |
| 5 | | | | |

## Program Report

### Location and SIN

DOT Number: 292780G
Milepost Number: 49.05
Site Name: 1450TH AVE TR16

SIN: 762010010016

### MCF and Template Selection

MCF Name: GCP-T6X-01-2.mcf
MCF Revision: 012
MCFCRC: 0DFE7A0C

Template = 1A:6 Trk Bl

### Program

BASIC: module configuration
Track 1 Slot = Track
Track 2/RIO 1 Slot = Not Used
Track 3 Slot = Not Used
Track 4 Slot = Not Used
Track 5/RIO 2 Slot = Not Used
Track 6/RIO 3 Slot = Not Used
SSCC-1 Slot = SSCC31
SSCC-2 Slot = SSCC31
SEAR Used = Yes

BASIC: MS/GCP operation
Track 1 : MS/GCP Operation = Yes

BASIC: Island operation
Track 1 : Island Used = Internal

BASIC: preemption
Preempt Logic = No

BASIC: radio Dax links
Radio DAX link A Used = No
Radio DAX link B Used = No

BASIC: VitalComms links
VitalComms link 1 Used = No
VitalComms link 2 Used = No

PREDICTORS: track 1
Track 1 : Prime Used = Yes
Track 1 : Dax A Used = No
Track 1 : Dax B Used = No
Track 1 : Dax C Used = No
Track 1 : Dax D Used = No
Track 1 : Dax E Used = No
Track 1 : Dax F Used = No
Track 1 : Dax G Used = No

GCP: track 1
Track 1 : GCP Freq Category = Standard
Track 1 : GCP Frequency = 211 Hz
Track 1 : Approach Distance = 2583 ft
Track 1 : Uni/Bi/Sim-Bidirni = Bidirni
Track 1 : GCP Transmit Level = High
Track 1 : Island Connection = Isl1
Track 1 : Island Distance = 120 ft
Track 1 : Computed Distance = 9999 ft
Track 1 : Linearization Steps = 100

GCP: track 1 prime
Track 1 : Prime Warning Time = 34 sec
Track 1 : Prime Offset Distance = 0 ft
Track 1 : Switch MS EZ Level = 12
Track 1 : Prime MS/GCP Mode = Pred
Track 1 : Prime Pickup Delay = 30 sec
Track 1 : Prime UAX = Not Used

GCP: track 1 low EZ detect
Track 1 : Low EZ Detection Used = No
Track 1 : Positive Start = Off
Track 1 : Enhanced Detectn Used = Yes
Track 1 : Station Stop Timer = 10 sec
Track 1 : False Activate Level = Normal
Track 1 : Poor Shunting Level = 2

GCP: track 1 MS Control
Track 1 : MS/GCP CtrlIP Used = No
Track 1 : MS Sensitivity Level = 0
Track 1 : Compensation Level = 1300
Track 1 : Low EX Adjustment = 39
Track 1 : Bidirn Dax Passthru = No

ISLAND: track 1
Track 1 : IslFrequency = 11.5 kHz
Track 1 : Pickup Delay (2s +) = 0 sec

AND: track Anding
AND 1 XR Used = Yes
AND 2 Used = No
AND 3 Used = No
AND 4 Used = No
AND 5 Used = No
AND 6 Used = No
AND 7 Used = No
AND 8 Used = No

AND: AND 1 XR
AND 1 XR Track 1 = Prime
AND 1 Enable Used = Yes
And 1 Enable Pickup = 0 sec
AND 1 Enable Drop = 0 sec
AND 1 Wrap Used = No

ADVANCED: MS restart
MS/GCP Restart Used = No

ADVANCED: out of service
OOS Control = OOS IPs

ADVANCED: out of service 2
T1 OOS Control = OOS Input 1
T1 OOS Controls = GCP and Island

ADVANCED: track wrap circuits
Wrap LOS Timer = 5 sec
Track 1 Wrap Used = No

ADVANCED: trk 1 overrides
Track 1 : AllPredictors Override Used = No

ADVANCED: OR logic
OR 1 Used = No
OR 2 Used = No
OR 3 Used = No
OR 4 Used = No

ADVANCED: InternalI/O 1
Pass Thrus = No
Int.1 Sets = Not Used
Int.1 Set by = Not Used
Int.2 Sets = Not Used
Int.2 Set by = Not Used
Int.3 Sets = Not Used
Int.3 Set by = Not Used
Int.4 Sets = Not Used
Int.4 Set by = Not Used

ADVANCED: InternalI/O 2
Int.5 Sets = Not Used
Int.5 Set by = Not Used
Int.6 Sets = Not Used
Int.6 Set by = Not Used
Int.7 Sets = Not Used
Int.7 Set by = Not Used
Int.8 Sats = Not Used
Int.8 Set by = Not Used

ADVANCED: site options
Daylight Savings = On
Units = Standard
Ext Maint CallInput = No
Emergency Activate IP = No
EZ/EX Logging = Change
EZ/EX Point Change = 3

SSCC
Gates Used = Yes
SSCC1+2 GPs Coupled = Yes
Min Activation = 20 sec
Rmt Activation Cancel = 3 min
BellOn Gate Rising = No
Mute BellOn Gate Down = No
SSCCIV Controller Used = No

SSCC: 1
SSCC-1 Activation = AND 1 XR
SSCC-1 Gate Delay = 3 sec
SSCC-1 Number of GPs = 1
SSCC-1 Number of GDs = 1
SSCC 1 : Flash Rate = 60
SSCC 1 : Low Battery Detection = No
SSCC 1 : Flash Sync = master
SSCC 1 : Invert Gate Output = No
SSCC 1 : Lamp NeutralTest = Off
Aux-1 Xng CtrlUsed = No

SSCC: 2
SSCC-2 Activation = AND 1 XR
SSCC-2 Gate Delay = 3 sec
SSCC-2 Number of GPs = 0
SSCC-2 Number of GDs = 1
SSCC 2 : Flash Rate = 60
SSCC 2 : Low Battery Detection = No
SSCC 2 : Flash Sync = slave
SSCC 2 : Invert Gate Output = No
SSCC 2 : Lamp NeutralTest = Off
Aux-2 Xng CtrlUsed = No

OUTPUT: assignment page 1
OUT 1.1 = Not Used
OUT 1.2 = Not Used

INPUT: assignment page 1
IN 1.1 = AND 1 XR Enable
IN 1.2 = Not Used

IO: assignment SSCC
OUT GC 1 = Gate Output 1
OUT GC 2 = Gate Output 2
IN 7.1 = Not Used
IN 7.2 = Not Used
IN 7.3 = Not Used
IN 7.4 = GD 1.1
IN 7.5 = GP 1.1
IN 8.1 = Out Of Service IP 1
IN 8.2 = Not Used
IN 8.3 = Not Used
IN 8.4 = GD 2.1
IN 8.5 = Not Used

SEAR
SEAR Subnode = 99
DI 1 = General1
DI 2 = Gnd Flt Tester 2
Rly 1 = Ground Fault Test
Rly 2 = Not Used

SEAR: Inputs
SP 2.1 = Not Used
SP 3.1 = Not Used
SP 4.1 = Not Used
SP 5.1 = Not Used
SP 6.1 = Not Used

SEAR: slot 1-4 Inputs
IN 1.2 = Not Used
IN 2.1 = Not Used
IN 2.2 = Not Usad
IN 3.1 = Not Used
IN 3.2 = Not Used
IN 4.1 = Not Used
IN 4.2 = Not Used

SEAR: Inputs slot 5
IN 5.1 = Not Used
IN 5.2 = Not Used

SEAR: Inputs slot 6
IN 6.1 = Not Used
IN 6.2 = Not Used

SEAR: slot 7-8 Inputs
IN 7.1 = Not Used
IN 7.2 = Not Used
IN 7.3 = Not Used
IN 8.2 = Not Used
IN 8.3 = Not Used
IN 8.5 = General2

SITE: programming
Radio Subnode = 1
Password Access = Off
Low Battery Enabled = Off

### Configuration Package File

Filename: 2927806.pac

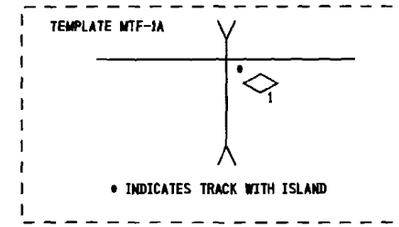


NOTES:

1) DISTANCE(S) TO BE VERIFIED AT INSTALLATION.
INDICATE SELECTED PROGRAMMED VALUE IF DIFFERENT THAN SHOWN.
REFER TO 4000 GCP INSTRUCTION/INSTALLATION MANUAL
FOR PROGRAMMING PARAMETERS.

2) PROGRAM TEXT HIGHLITED IN RED INDICATES 4000 PROGRAM
MODIFICATIONS TO DEFAULT PROGRAM VALUES.

3) EACH CONSTANT WARNING DEVICE SYSTEM TO BE PROGRAMMED TO
CONVERT TO A MOTION SENSOR 300 FEET FROM EDGE OF ROAD
TRAVELLED WAY.
SHUNT TRACK 300 FEET FROM EDGE OF ROAD TRAVELLED WAY
AND NOTE "EZ" VALUE.
PROGRAM EACH SYSTEM WITH THE INDICATED "EZ" VALUE +2.

4) VERIFY SET TIMER VALUE TO MATCH ACTUAL TRAIN MOVEMENT
WITHIN THE CROSSING APPROACH CIRCUITS.

PROPOSED
DES. No. _____
RED-IN YELLOW-OUT
AS INSTALLED
DATE _____
BY _____

| PROPOSED D | M | Y | REVISIONS | D | C | COMPLETED D | M | Y | C |
|---|---|---|---|---|---|---|---|---|---|
| | | | | | | | | | |

DIVISION MIDWEST
SUB. PEORIA
SD. 1047 C
MP. 49.00 TO 49.60

SIGNALS AND COMMUNICATIONS EDMONTON, ALBERTA | DES. LGY
21 DECEMBER 2007 | CH. RLC

GCP 4000 NON REDUNDANT
PROGRAM INFORMATION
1450TH AVE./TR216
CHESTERVALE, IL

M 04900C12

SAFETRAN SYSTEM CORP.
LOUISVILLE DIVISION, LOUISVILLE, KY

SAFETRAN SYSTEMS CORPORATION

| | | | |
|---|---|---|---|
| DES. : LGY | DATE: 12/21/07 | JOB NO. : PICAID138 | |
| CKD. : RLC | ISSUE DATE: N/A | EST. NO. :N/A | |
| DRN. : LGY | PLAN NO. :N/A | SHEET N/A OF N/A | |
| P. TIME:14:09 | P. DATE: 29-JAN-2008 | CAD ID. : 04900C12 | |

| NO. | DATE | BY | DESCRIPTION | APP. BY |
|---|---|---|---|---|
| 1 | | | | |
| 2 | | | | |
| 3 | | | | |
| 4 | | | | |
| 5 | | | | |

REVISIONS

TO CONFIGURE SEARII & SEARIII PRESS SITE SETUP KEY. USE ARROW KEYS TO MAKE SELECTION, PRESS ENTER AFTER SELECTION HAS BEEN MADE.

STAGE 1

| PROGRAM MENU QUESTIONS | PROGRAM | OPTIONS/RANGE |
|---|---|---|
| DATE/TIME? | CURRENT DATE/TIME | CURRENT DATE/TIME |
| AUTOMATIC DST ADJUSTMENT? | YES | YES, NO |
| TIME ZONE? | CENTRAL | EASTERN, CENTRAL, MOUNTAIN, PACIFIC, ALASKA, HAWAII, ATLANTIC, SASKATCHEWAN, NEW FOUNLAND |
| SITE NAME? | 1450TH AVE./TR216 | STREET NAME |
| MILE POST? | 49.05-B | MILEAGE |
| DOT/CROSSING IS #? | 292 780G | |
| TESTER TYPE? | CROSSING | CROSSING, WAYSIDE |
| DATE FORMAT? | dd-mm-yyyy | mm-dd-yyyy, dd-mm-yyyy |
| TEMPERATURE FORMAT? | FAHRENHEIT | FAHRENHEIT, CELSIUS |
| SITE TYPE? | NO COM | NO COM, BULLHORN, DIALUP, NODE, COLLECTOR |
| SITE ATCS ADDRESS? | 7.620.100.100.99.01 | 7.RRR.LLL.GGG.99.01 |
| OFFICE ATCS ADDRESS? | | 2.RRR.NN.DDDD |
| (FOR NODE USE) PRIMARY HOP ADDR? | | 7.RRR.LLL.GGG.00.01 |
| (FOR NODE USE) BACKUP HOP ADDR1? | | 7.RRR.LLL.GGG.00.01 |
| (FOR NODE USE) BACKUP HOP ADDR2? | | 7.RRR.LLL.GGG.00.01 |
| (FOR COLLECTOR USE) POLL ID? | | 1-99 |
| (FOR COLLECTOR USE) MODE? | | GEN/ATCS, GENISYS |
| (FOR COLLECTOR USE) WAMS/XID? | | ENABLED, DISABLE |
| (FOR COLLECTOR USE) OFFICE COMM. DEVICE? | | DIRECT (RS232)<br>MCM (RS232)<br>MCM (ECHELON)<br>SREAD SPEC (ECHELON)<br>DIAL MODEM (RS232)<br>S200 RADIO (RS422) |
| (FOR COLLECTOR USE) OFFICE PHONE NUMBER? | | PHONE NUMBER OF WAMS |
| (FOR COLLECTOR USE) INIT STRING? | | OPTIONAL HAYES MODEM INITIALIZATION STRING |
| FIELD COMM. DEVICE? | | VHF COMM. (ECHELON)<br>VHF COMM. (RS232)<br>SPREAD SPEC (ECHELON)<br>SPREAD SPEC (RS232) |
| USER PORT? | 57600, 8, N, 1, N | BAUD, DATA BITS, PARITY, STOP BITS, FLOW CONTROL |
| AUX PORT? | 9600, 8, N, 1, N | BAUD, DATA BITS, PARITY, STOP BITS, FLOW CONTROL |

YOU WILL NOW SEE A MESSAGE "PLEASE WAIT COMPILING STAGE 1"
CONTINUE TO NEXT PROGRAM MENU QUESTIONS.

STAGE 2

| QUESTION | PROGRAM | SELECTION 1 (MINIMUM) | SELECTION 2 (MAXIMUM) | CONDITION FOR MENU DISPLAY |
|---|---|---|---|---|
| RESET NAMES / MODULES ? | NO | YES | NO | ALWAYS |
| RAILROAD NUMBER ? | 360 (IC) | 1 | 999 | ALWAYS |
| CROSSING CONFIGURATION | NORMAL | NORMAL | SPLIT GATE (NOTE 2) | ALWAYS |
| ENTRANCE GATES ? | 0 (NOTE 3) | 0 | 8 | ALWAYS |
| GATE POSTION FAIL TIME (SECONDS) ? | N/A | 10 | 60 | GATES > 0 |
| BATTERY BANKS ? | 2 | 1 | 3 | ALWAYS |
| BATT MON USED ? | NO | NO | YES | ALWAYS |
| INTERNAL CROSSING CONTROLLERS ? | 2 | 0 | 2 | ALWAYS |
| EXTERNAL CROSSING CONTROLLERS ? | 0 | 0 | 2 | CROSSING CONTROLLER = YES |
| VHF COMMUNICATOR ? | YES | YES | NO | ALWAYS |
| DTMF ACTIVATION? | NO | NO | YES | RAILROAD = 360 (IC) |
| ACTIVATION CODE ? | N/A | 1 | 999 | VHF COMMUNICATOR = YES |
| ACTIVATION TIMEOUT ? | N/A | 1 | 600 | VHF COMMUNICATOR = YES |
| ILOD MODULES ? | 2 | 0 | 4 | ALWAYS |
| ANY LED BULBS USED ? | YES | NO | YES | ILOD MODULES > 0 |
| AUTO INSPECTION ? | NO | YES | NO | ALWAYS |
| BELL SENSORS ? | 0 | 0 | 8 | ALWAYS |
| BELL SENSORS TSS1 ? | N/A | NO | YES | BELL SENSORS > 0 |
| BELL SENSORS TSS2 ? | N/A | NO | YES | BELL SENSORS > 0 |
| BELL SENSORS TSS3 ? | N/A | NO | YES | BELL SENSORS > 0 |
| BELL SENSORS TSS4 ? | N/A | NO | YES | BELL SENSORS > 0 |
| BELL SENSORS TSS5 ? | N/A | NO | YES | BELL SENSORS > 0 |
| BELL SENSORS TSS6 ? | N/A | NO | YES | BELL SENSORS > 0 |
| BELL SENSORS TSS7 ? | N/A | NO | YES | BELL SENSORS > 0 |
| BELL SENSORS TSS8 ? | N/A | NO | YES | BELL SENSORS > 0 |
| BELL ON ? | N/A | GATES LOWERING | GATES MOVING | BELL SENSORS > 0 |
| GFT'S ? | YES | YES | NO | ALWAYS |
| BATTERIES ON GFT1 ? | 2 | 1 | 2 | GFT'S = YES |
| GATE TIP SENSORS ? | N/A | YES | NO | GATES > 0 |
| RTU ? | NO | NO | YES | ALWAYS |
| VHF VOICE CHANNEL ? | 1 (NOTE 1) | 1 | 8 | VHF COMMUNICATOR = YES |
| VHF DATA CHANNEL ? | 1 (NOTE 1) | 1 | 8 | VHF COMMUNICATOR = YES |
| USE CELL MODEM NON-CRITICAL FEATURE ? | NO | NO | YES | ALWAYS |
| FULL APPROACH MOVE ALARMS ? | ACTIVATE | ACTIVATE | DO NOT ACTIVATE | ALWAYS |

YOU WILL NOW SEE A MESSAGE "PLEASE WAIT COMPILING STAGE 2"
CONTINUE TO NEXT PROGRAM MENU QUESTIONS.

STAGE 3

| PROGRAM MENU QUESTIONS | PROGRAM |
|---|---|
| EDIT DIGITAL INPUTS | NO |
| EDIT BATTERIES | NO |
| EDIT RELAYS | NO |
| EDIT TEST LEDS | NO |
| EDIT ILOD SENSORS | NO |
| EDIT VHF SETTINGS | NO |
| GCP4K ATCS SUBNODE? | 16 |

SAVE CONFIGURATION

NOTES:

1) INDICATE SELECTION IN SPACE PROVIDED.
2) ADDITIONAL OPTIONS: DUAL CROSSING, EXTERNAL ENTRANCE GATE CONTROLLERS.
3) SELECT "0" IF NO GATE TIP AND BELL SENSORS ARE USED. THUS GATE AND BELL SENSOR RELATED STEPS WILL NOT BE AVAILABLE, OVERWISE ERRORS IN SEARS RECORDING WILL OCCUR.

PROPOSED
DES. No. _____
RED-IN YELLOW-OUT
AS INSTALLED
DATE _____
BY _____

SEARIII EXECUTIVE SOFTWARE: 9V725-A01T SEARIII APPLICATION SOFTWARE: 9V864-A01H

| PROPOSED D | PROPOSED M | PROPOSED Y | REVISIONS | D | C | COMPLETED D | COMPLETED M | COMPLETED Y | C |
|---|---|---|---|---|---|---|---|---|---|
| | | | | | | | | | |

DIVISION MIDWEST
SUB. PEORIA
SD. 1047 C
MP. 49.00 TO 49.60
SIGNALS AND COMMUNICATIONS EDMONTON, ALBERTA
21 DECEMBER 2007
DES. LGY
CH. RLC

SEARIII
SETUP AND PROGRAM
1450TH AVE./TR216
CHESTERVALE, IL

M 04900C13

SAFETRAN SYSTEMS CORPORATION
DES. : LGY DATE: 12/21/07 JOB NO. : PICA10138
CKD. : RLC ISSUE DATE: N/A EST. NO. : N/A
DRN. : LGY PLAN NO. : N/A SHEET N/A OF N/A
P. TIME: 14:09 P. DATE: 29-JAN-2008 CAD ID. : 04900C13

SAFETRAN SYSTEM CORP.
LOUISVILLE DIVISION, LOUISVILLE, KY

| NO. | DATE | BY | REVISIONS DESCRIPTION | APP. BY |
|---|---|---|---|---|
| 1 | | | | |
| 2 | | | | |
| 3 | | | | |
| 4 | | | | |
| 5 | | | | |

## CALIBRATION HISTORY

INITIAL SET UP BY: _____ DATE: _____

| DC VOLTAGE READINGS AFTER CALIBRATION | | | | CALIBRATION HISTORY | | | | | | | | | | LINEARIZATION HISTORY (NOTE 1) | | | | | | | |
|---|---|---|---|---|---|---|---|---|---|---|---|---|---|---|---|---|---|---|---|---|---|
| | | | | EZ/EX VALUES (TRACK UNOCCUPIED) | | | | HARD WIRE SHUNT AT TERMINATION SHUNT | | | | | | HARD WIRE SHUNT AT 50 PERCENT POINT OF SHUNT | | | | | | | |
| | | | | EZ | | EX | | EZ | | EX | | 50 PERCENT OF EZ VALUE | | NO LINEARIZATION | | | | LINEARIZATION COMPLETE | | | |
| | | | | | | | | | | | | | | EZ | | EX | | STEP± | | EZ | |
| | | | | NRML | STBY | NRML | STBY | NRML | STBY | NRML | STBY | NRML | STBY | NRML | STBY | NRML | STBY | NRML | STBY | NRML | STBY |
| T1 | Z1= | NORTH | TRACK 1 | | | | | | | | | | | | | | | | | | |
| T1 | Z2= | SOUTH | TRACK 1 | | | | | | | | | | | | | | | | | | |

## CALIBRATION HISTORY

INITIAL SET UP BY: _____ DATE: _____

| DC VOLTAGE READINGS AFTER CALIBRATION | | | | CALIBRATION HISTORY | | | | | | | | | | LINEARIZATION HISTORY (NOTE 1) | | | | | | | |
|---|---|---|---|---|---|---|---|---|---|---|---|---|---|---|---|---|---|---|---|---|---|
| | | | | EZ/EX VALUES (TRACK UNOCCUPIED) | | | | HARD WIRE SHUNT AT TERMINATION SHUNT | | | | | | HARD WIRE SHUNT AT 50 PERCENT POINT OF SHUNT | | | | | | | |
| | | | | EZ | | EX | | EZ | | EX | | 50 PERCENT OF EZ VALUE | | NO LINEARIZATION | | | | LINEARIZATION COMPLETE | | | |
| | | | | | | | | | | | | | | EZ | | EX | | STEP± | | EZ | |
| | | | | NRML | STBY | NRML | STBY | NRML | STBY | NRML | STBY | NRML | STBY | NRML | STBY | NRML | STBY | NRML | STBY | NRML | STBY |
| T1 | Z1= | NORTH | TRACK 1 | | | | | | | | | | | | | | | | | | |
| T1 | Z2= | SOUTH | TRACK 1 | | | | | | | | | | | | | | | | | | |

## CALIBRATION HISTORY

INITIAL SET UP BY: _____ DATE: _____

| DC VOLTAGE READINGS AFTER CALIBRATION | | | | CALIBRATION HISTORY | | | | | | | | | | LINEARIZATION HISTORY (NOTE 1) | | | | | | | |
|---|---|---|---|---|---|---|---|---|---|---|---|---|---|---|---|---|---|---|---|---|---|
| | | | | EZ/EX VALUES (TRACK UNOCCUPIED) | | | | HARD WIRE SHUNT AT TERMINATION SHUNT | | | | | | HARD WIRE SHUNT AT 50 PERCENT POINT OF SHUNT | | | | | | | |
| | | | | EZ | | EX | | EZ | | EX | | 50 PERCENT OF EZ VALUE | | NO LINEARIZATION | | | | LINEARIZATION COMPLETE | | | |
| | | | | | | | | | | | | | | EZ | | EX | | STEP± | | EZ | |
| | | | | NRML | STBY | NRML | STBY | NRML | STBY | NRML | STBY | NRML | STBY | NRML | STBY | NRML | STBY | NRML | STBY | NRML | STBY |
| T1 | Z1= | NORTH | TRACK 1 | | | | | | | | | | | | | | | | | | |
| T1 | Z2= | SOUTH | TRACK 1 | | | | | | | | | | | | | | | | | | |

NOTE:

1) **SET UP APPROACH LENGTH AND LINEARIZATION CALIBRATION**
VERIFY THAT "ENHANCED DETECTION" MODE IS PROGRAMMED "OFF" BEFORE ATTEMPTING LINEARIZATION PROCEDURES.

PROPOSED
DES. No. _____
RED-IN YELLOW-OUT
AS INSTALLED
DATE _____
BY _____

6' X 6' BUNGALOW

| PROPOSED D | M | Y | REVISIONS | D | C | COMPLETED D | M | Y | C |
|---|---|---|---|---|---|---|---|---|---|
| | | | | | | | | | |

DIVISION MIDWEST
SUB. PEORIA
SD. 1047 C
MP. 49.00 TO 49.60
CN
SIGNALS AND COMMUNICATIONS EDMONTON, ALBERTA
DES. LGY
CH.
29 AUGUST 2007
GCP 4000
CALIBRATION HISTORY
145OTH AVE./TR216
CHESTERVALE, IL
M TR216C14

SAFETRAN SYSTEM CORP.
LOUISVILLE DIVISION, LOUISVILLE, KY

SAFETRAN SYSTEMS CORPORATION

| | | | |
|---|---|---|---|
| DES.: LGY | DATE: 12/21/07 | JOB NO.: P1CA10138 | |
| CKD.: RLC | ISSUE DATE: N/A | EST. NO. IN/A | |
| DRN.: LGY | PLAN NO. IN/A | SHEET N/A OF N/A | |
| P. TIME: 14:09 | P. DATE: 29-JAN-2008 | CAD ID.: 04900C14 | |