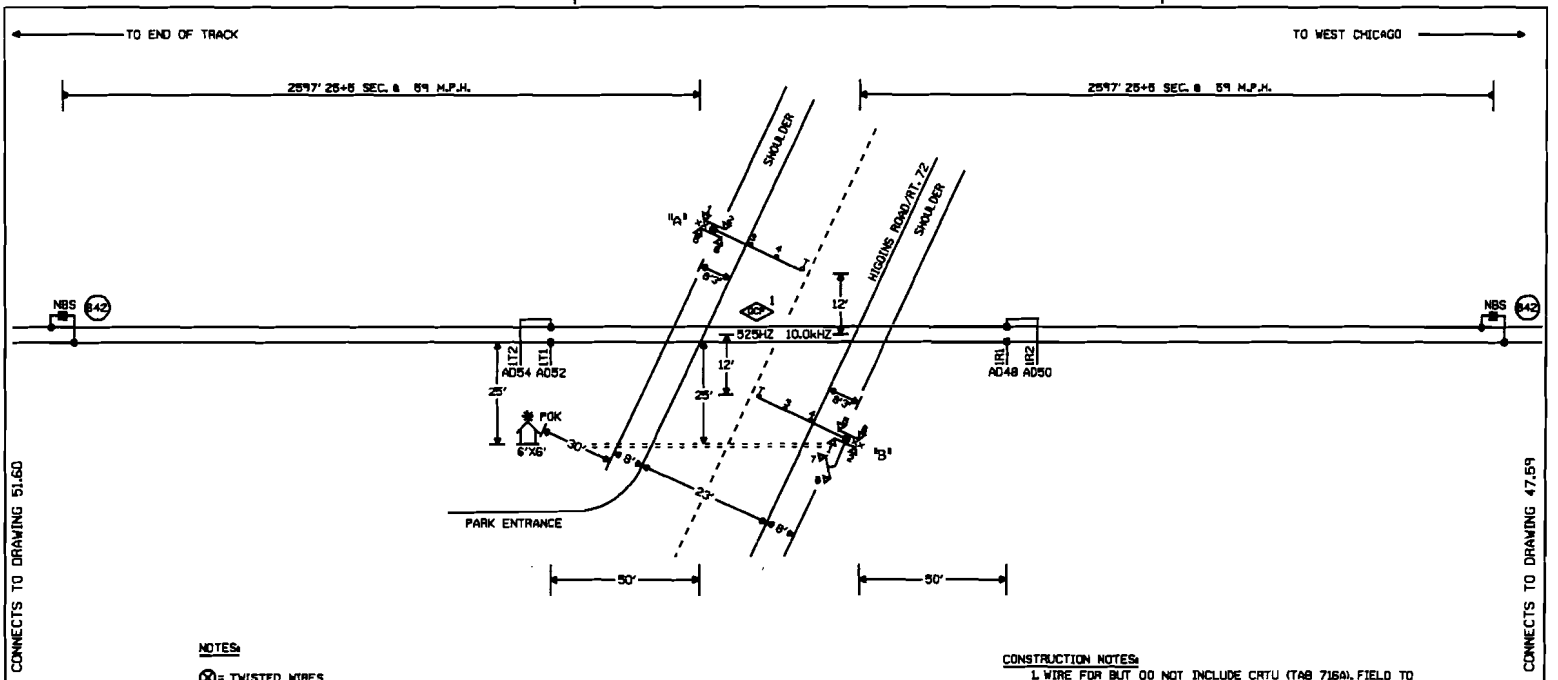

NOTES:

⊗ = TWISTED WIRES
INSULATED 1 TWIST PER FT.
ALL TRACK WIRES 2C. #6

TRANSMITTER AND RECEIVER LEADS TO BE SEPARATED BY AT LEAST 12" IN TRENCH. LENGTHS SHOULD NOT EXCEED MANUFACTURES RECOMMENDATION.

TOP OF FOUNDATION TO BE AT SAME ELEVATION AS THE SURFACE OF THE TRAVELED WAY & NO MORE THAN 4" ABOVE THE SURFACE OF THE GROUND.

ALL BUNGALOW WIRING TO BE #16 AWG FLEX UNLESS OTHERWISE SPECIFIED EXCEPT ALL GROUND WIRE TO BE #6 AWG FLEX OR LARGER.

ALL WIRING IN GATE MECHANISM TO BE #10 "AWG FLEX".

REFER TO UP STANDARD DWG FOR BUNGALOW GROUNDING.

ALL LIGHTS TO BE 12" ROUNDELS.

= = = = = = 4" X 60' CONDUIT

LIGHTS: LED LIGHTS

GATE A: 19'
GATE B: 19'

xx = BELL

CRTU: MICROBURST

CONSTRUCTION NOTES:

1. WIRE FOR BUT DO NOT INCLUDE CRTU (TAB 716A). FIELD TO RECONFIGURE CRTU PER NEW DESIGN.
2. REMOVE EXISTING HWS.

RECEIVED
FEB 4 2008
Illinois Commerce Commission
RAIL SAFETY SECTION

W ←—○—→ E

GILBERTS, ILLINOIS
HIGGINS ROAD/RT. 72
M.P. 49.85
BELVIDERE SUBDIVISION
O.D.T.#174 552V

NEW SHEET

05-21-07 INSTALL FLASHERS AND GATES WITH CWT AT M.P. 49.85 AFE 83170 GRK SSC/JJF	MODIFICATION LEVEL		UNION PACIFIC SAFETY SIGNAL DESIGN	DES: SSC DIG: SSC CHK: GRK/GRK A.F.E. 83170 ID: BEV4985.IX	UNION PACIFIC RAILROAD GILBERTS, ILLINOIS HIGHWAY CROSSING SIGNALS CONTROL CIRCUITS Office of AVP Engineering - Design Omaha, Nebraska	DATE 05-21-07 SHEET 1 DWG 49.85 BEV
	Q.A. LAST LEVEL CHECKED	DP				
	LAST LEVEL MOD THIS TYPICAL	DP				
	LAST LEVEL BY DESIGNER	DP				
	CHANGED FROM TYPICAL?	Y				

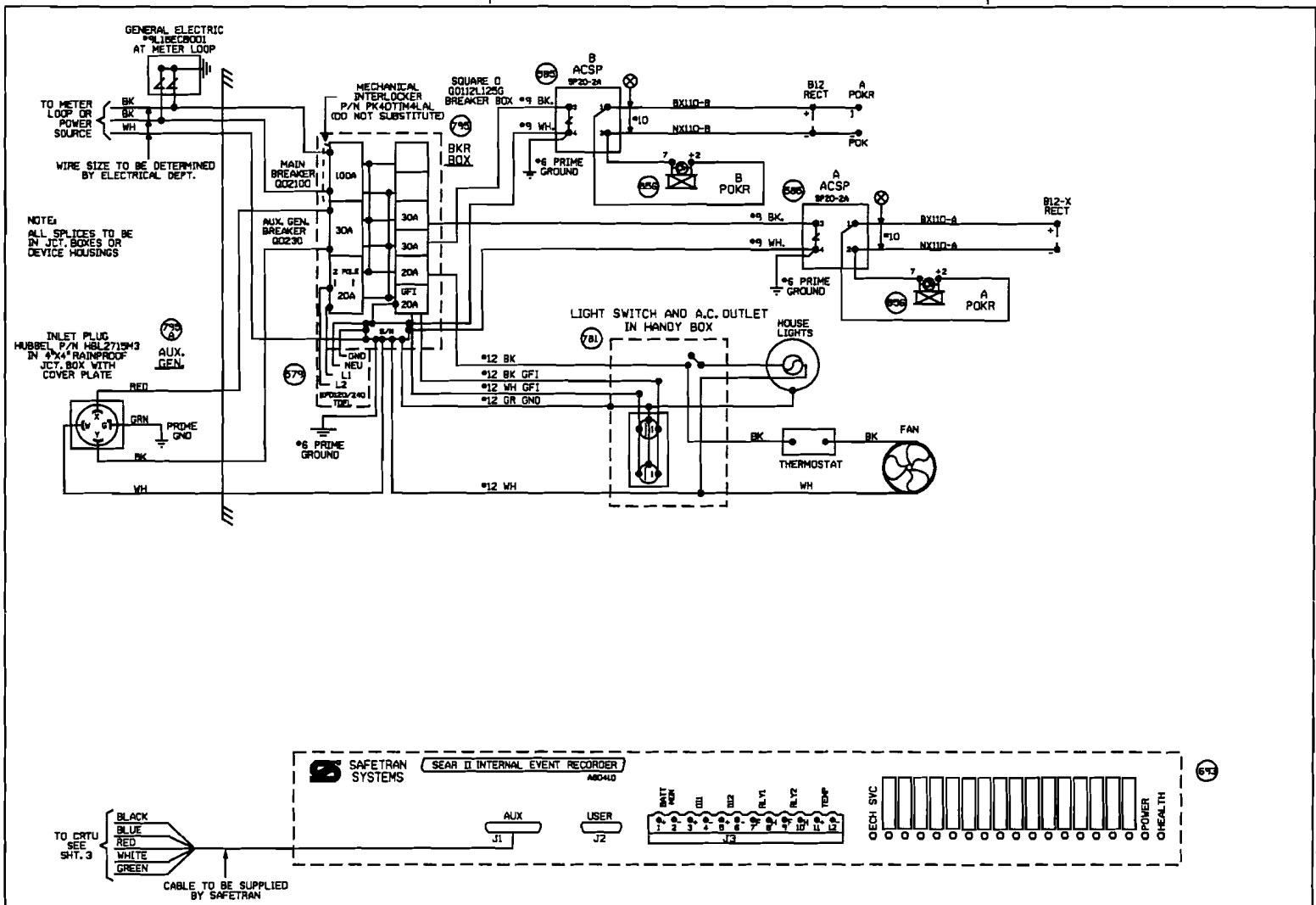

GILBERTS, ILLINOIS
HIGGINS ROAD/RT. 72
M.P. 49.85
BELVIDERE SUBDIVISION
D.O.T.#174 552V

NEW SHEET

05-21-07 INSTALL FLASHERS AND GATES WITH CWT AT M.P. 49.85	MODIFICATION LEVEL		UNION PACIFIC	DES: SSC	UNION PACIFIC RAILROAD	DATE 05-21-07
	G.A. LAST LEVEL CHECKED	DP		DIG: SSC	GILBERTS, ILLINOIS	SHEET 2
	LAST LEVEL MOD THIS TYPICAL	DP		CHK: GRK	HIGHWAY CROSSING SIGNALS	DWG 49.85
	LAST LEVEL BY DESIGNER	DP		A.F.E. 63170	CONTROL CIRCUITS	BEV
AFE 63170 GRK SSC/JJF	CHANGED FROM TYPICAL?	Y	SIGNAL DESIGN	ID: BEV4985.2X	Office of AVP Engineering - Design Omaha, Nebraska	

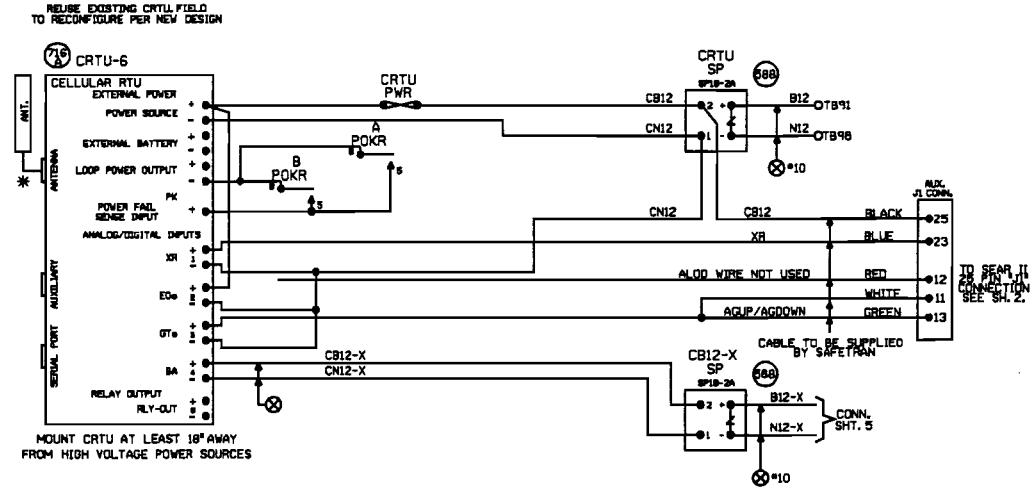

NOTES:

ALL DIODES 1N5060 OR 1N4004 UNLESS OTHERWISE NOTED.

* MOUNT ANTENNA ON TOP OF HOUSE.
  INSTALL ANTENNA CABLE AND CHOKE PER TECH BULLENTIN #99-0015-00

ALL WIRES #18 UNLESS OTHERWISE NOTED.

ALL UNUSED 'NC' INPUTS MUST BE TIED HIGH TO BATTERY

ALL UNUSED ANALOG INPUTS MUST BE TIED HIGH TO BATTERY

ALL UNUSED 'NO' INPUTS MUST BE DISCONNECTED

NORMAL STATE FOR ANALOG CHANNELS IS EQUAL TO THE STORED NOMINAL VOLTAGE +120% OR -81%

CRTU FRONT PANEL DISPLAY CHART INDICATES NORMAL STATE

■ DIGITAL INPUT HIGH OR POWER FAIL INPUT CLOSED ■ DIGITAL INPUT LOW, OR POWER FAIL INPUT OPEN

■ L ← LATCH IS SET BECAUSE CRTU DETECTED AN ALARM CONDITION
12.05V L

'sRUN MODE' 'sRUN MODE-SILENT'
CRTU RADIO IS DISABLED. REPROGRAM CRTU WITH LAPTOP.

ANALOG AND AC INPUT MODULES AND SURGE PROTECTORS MUST BE MOUNTED LESS THAN 18" FROM CRTU

ANALOG MODULES CONVERT DC VOLTAGE TO A SQUARE WAVE. A WORKING ANALOG MODULE WILL HAVE 4.5VDC TO 8.0VDC BETWEEN 5VOUT+ AND 6VOUT-. WHERE, 0VOLTS = 0HZ OUT, 3OVOLTS = 10KHZ OUT, AND 15VOLTS = 5KHZ OUT
MAKE SURE CRTU IS PROGRAMMED WITH CALIBRATION SETTINGS.

CRTU CH4 CAN BE CONNECTED TO EITHER SP18 OR EQUIPMENT SIDE OF MOSAL, TAB 565

UNIT INSTALLATION AND SETUP

R.R. SITE ID WHERE: SSSS = 4 CHARACTER SUBDIVISION ID. FILL WITH PRECEDING ZEROS AS REQUIRED. THE MAIN TRACK SUBDIVISION ID# IS IN THE CURRENT TIMETABLE. INDUSTRIAL LEADS, LEASED, AND LEAD TRACKS LISTED WITHIN THE SUBDIVISION MAY HAVE THEIR OWN UNIQUE SUBDIVISION ID#. ALWAYS REFER TO CURRENT PRINTED COPY OF THE TIMETABLE.
LLLLLLLL = 8 CHARACTERS USE DOT# AT CROSSINGS, AND
WO LLLLLL = USE 'WO' THEN MP# AT WAYSIDE LOCATIONS.
EXAMPLE = 0786WOUSOLSUT
HSLLLLLL = USE 'HS' THEN MP# AT HSD SITES.
EXAMPLE = 0100-HSDSLSZTX
THE MP# MUST USE A DECIMAL POINT TO SEPARATE NUMBERS. FILL WITH PRECEDING DASHES AS REQUIRED.
AA = 2 CHARACTER STATE NAME FOR ALL LOCATIONS.
MUST BE 14 CHARACTERS LONG. NO SPACES ALLOWED.

SITE IDENTIFIER SSSSLLLLLLLLAA	0015-174552VIL
OPERATION TO RESUME:	RUN
SIGNAL STRENGTH dBm	
CARRIER ID	
FIRMWARE VERSION	2.3
SERIAL NUMBER	
BOOT VERSION:	
CHM VERSION:	
MIN ASSIGNMENT	
ESN: (MICROBURST ONLY)	
CONFIGURATION NET	MICROBURST
SILENCE INTERVAL	60 MINUTES
HEALTHCHECK INTERVAL	EVERY 2 DAYS
ALARM DEFER DELAY	240 MINUTES (4 HOURS)
SIGNAL STATUS	
SCADANET STATUS	
CALIBRATION CONSTANT CH1	
CALIBRATION CONSTANT CH2	
CALIBRATION CONSTANT CH3	
CALIBRATION CONSTANT CH4	
CALIBRATION CONSTANT PS	

FIELD PROVIDES: SAMPLED NOMINAL VOLTAGES, SCADANET STATUS CALIBRATION CONSTANTS, SERIAL NUMBER, AND SIGNAL STATUS.

CHANNEL SETUP - STANDARD CONFIGURATION 32:XR,EOe,GTe,Be

CHANNEL NORMAL STATE	SENSE (NO/NC)	NAME FUNCTION	RECOGNITION DELAY SECONDS ACTIVE	RECOGNITION DELAY SECONDS NORMAL	RETURN TO NORMAL	REPORTING MODE	ALARM LINKED CHANNEL	ALARM LINKED CRITERIA	EVENT LOGGING ENABLED OPTIONS
POWER FAIL (CH0) ■	POWER FAIL DETECT NO	PFxr-PK AC POWER FAIL	7,200 ALARM	300 NORMAL	ENABLED	ALERT	DISABLED	N/A	
CH1 ■	DIGITAL INPUT NC	CH1-XR XR DOWN TO LONG	1,800 ALARM	1 NORMAL	ENABLED	ALERT	DISABLED	N/A	ANALOG VALUE SENT
CH2 ■	DIGITAL INPUT NO	CH2-EOe LIGHT OUT	120 ALARM	10 NORMAL	ENABLED	ALERT	DISABLED	N/A	
CH3 ■	DIGITAL INPUT NO	CH3-GTe GATES NOT UP/DOWN	120 ALARM	10 NORMAL	ENABLED	ALERT	DISABLED	N/A	
CH4 STORED NOMINAL VOLTAGE	ANALOG INPUT N/A	CH4-Be/V BATTERY MONITOR BATTERY LOW	600 ALARM	1200 NORMAL	ENABLED	ALERT W/UPDATE	DISABLED	N/A	DIGITAL EVENTS
POWER SOURCE (CH5)	ANALOG INPUT N/A	PS-Be/V BATTERY MONITOR BATTERY LOW	600 ALARM	1200 NORMAL	ENABLED	ALERT W/UPDATE	DISABLED	N/A	PFxr-PK CH1-XR CH2-EOe CH3-GTe

ANALOG CHANNEL	USEFUL RANGE VOLTS LOW	USEFUL RANGE VOLTS HIGH	DISPLAYED RANGE VOLTS LOW	DISPLAYED RANGE VOLTS HIGH	RELATIVE ALARM POINT LOW	RELATIVE ALARM POINT HIGH	ABSOLUTE ALARM POINT LOW	ABSOLUTE ALARM POINT HIGH	AUTOMATIC UPDATE INTERVAL	STORED NOMINAL VOLTAGE	SAMPLED NOMINAL VOLTAGE
CH4	0.0	30.00	0.0	30.00	81%	120%	10.0	29.0	14 DAYS	12.89	
POWER SOURCE	0.0	30.00	0.0	30.00	81%	120%	10.0	29.0	14 DAYS	12.89	

RELAY OUTPUT	NAME	ACTIVE	NORMAL	PULSE DURATION	
	RLY-OUT	SET-UP-OPEN	CLR-ON-CLOSE	15 SECONDS	StdCfg Ver: 2.3.3 REV'D 4-20-02

MAINTENANCE OPERATIONS

TO START OR ABORT ANY PROCEDURE

1. PRESS THE 'CANCEL' BUTTON FIRST

WHEN RESPONDING TO A CALL, PUT THE CRTU IN THE 'SILENCE ALARMS' MODE

1. PRESS 'SELECT' AND THEN '+ ARROW' BUTTON UNTIL
   DISPLAY: ACTION?
   SILENCE ALARMS
2. PRESS THE 'SELECT' BUTTON TWICE.
3. CORRECT PROBLEM AND SIMULATE NORMAL TRAIN MOVEMENT THROUGH THE LOCATION
4. EXAMINE EACH CHANNEL ON THE CRTU
5. PRESS THE '+/- ARROW' BUTTON
   VERIFY ALL CHANNELS INDICATE A NORMAL STATE

NORMAL STATES ARE ON THE CHANNEL SETUP CHART

CLEAR TIMERS, LATCHES AND SEND ALL NORMAL

1. DO STEPS #1 - #5 ABOVE, AND PRESS 'CANCEL'.
2. PRESS 'SELECT' AND THEN '- ARROW' BUTTON UNTIL
   DISPLAY: ACTION?
   SERVICE MODE
3. PRESS 'SELECT' AGAIN TO RESET TIMERS, AND IF
   DISPLAY: SERVICE MODE
   ALL NORMAL
4. PRESS 'SELECT' AGAIN TO CLEAR LATCHES, AND SEND ALL NORMAL, SKIP STEPS #5-#6.
5. HOWEVER, IF ALARMS ARE NOT CLEARED
   DISPLAY: SERVICE MODE
   ALARMS PENDING/PRESENT
6. PRESS 'CANCEL', CORRECT PROBLEM AND REPEAT STEPS #2 THRU #5 UNTIL ALL NORMAL SENT.

TO CANCEL THE 'SILENCE ALARMS' MODE

1. PRESS 'SELECT' AND THEN '+ ARROW' BUTTON UNTIL
   DISPLAY: ACTION?
   CANCEL SILENCE
2. PRESS THE 'SELECT' BUTTON AGAIN

EXAMINE & SET BATTERY VOLTAGE NOMINAL VALUE

1. PRESS THE '+ ARROW' OR '- ARROW' BUTTON UNTIL THE DESIRED CHANNEL IS DISPLAYED.
   DISPLAY: PS-Be
   13.83V NORMAL
2. VERIFY THE DISPLAYED READING WITH A DIGITAL VOLTMETER
3. PRESS THE 'SELECT' BUTTON, AND THE CRTU DISPLAY WILL SWITCH BETWEEN CURRENT/SAVED NOMINAL VOLTAGE VALUES.
   DISPLAY: NOMINAL ON "ST" (CURRENT)
   13.83
   DISPLAY: SAVED NOMINAL @ (STORED)
   12.89
4. PRESS THE 'SELECT' BUTTON AND THE CURRENT OR 'NOMINAL ON' VALUE WILL BE SAMPLED AND STORED AS THE 'SAVED NOMINAL' VALUE
5. VERIFY THE 'NOMINAL ON' AND 'SAVED NOMINAL' VALUES ARE EQUIVALENT, REPEAT STEPS #1 THRU #3 & PRESS THE 'CANCEL' BUTTON.

NEW SHEET

GILBERTS, ILLINOIS
HIGGINS ROAD/RT. 72
M.P. 49.85
BELVIDERE SUBDIVISION
D.O.T.#174 552V

05-21-07 INSTALL FLASHERS AND GATES WITH CWT AT M.P. 49.85	MODIFICATION LEVEL		
	Q.A. LAST LEVEL CHECKED	DJ	
	LAST LEVEL MOD THIS TYPICAL	DJ	
	LAST LEVEL BY DESIGNER	DP	
AFE 83170 GRK SSC/JJF	CHANGED FROM TYPICAL?	Y	

UNION PACIFIC — SIGNAL DESIGN

DES:	SSC
DGN:	SSC
CHK:	GRK
A.F.E.	83170
ID:	BEV4985.3X

UNION PACIFIC RAILROAD
GILBERTS, ILLINOIS
HIGHWAY CROSSING SIGNALS
CONTROL CIRCUITS

DATE	05-21-07
SHEET	3
DWG	49.85
	BEV

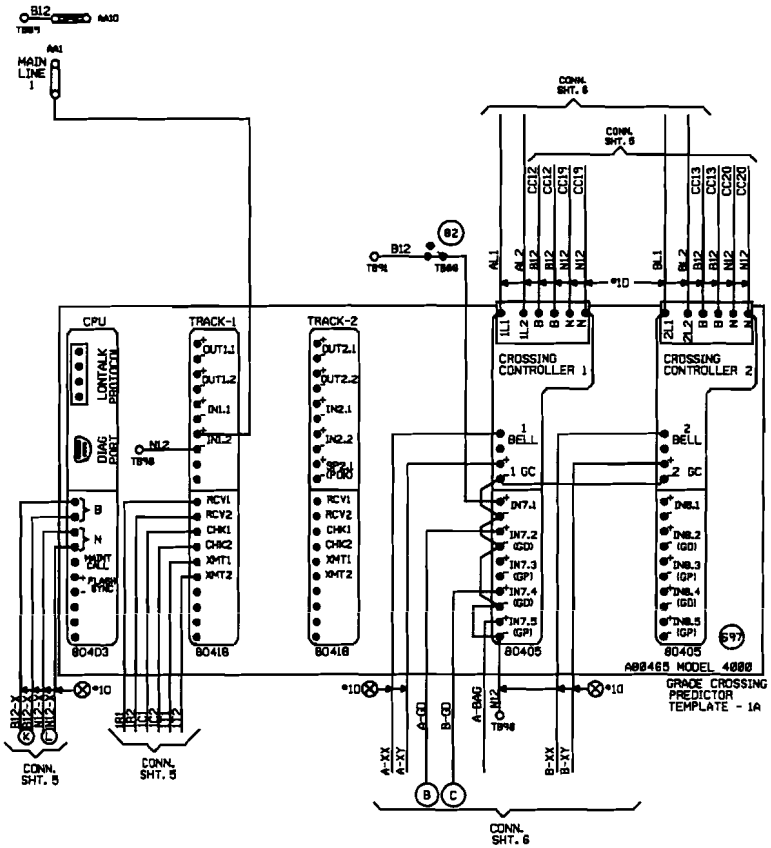

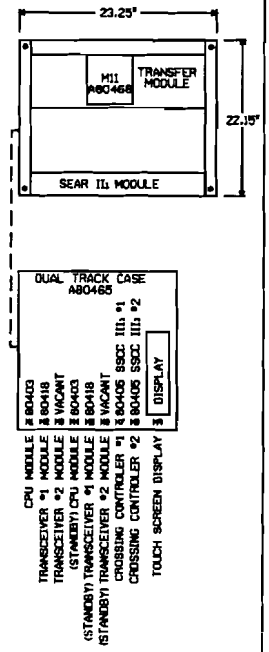

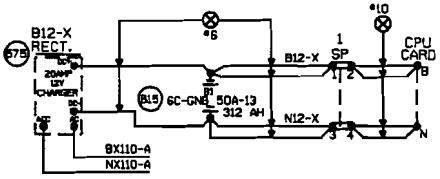

"Mf" FREQUENCY (HZ)	MAXIMUM TRANSMIT WIRE LENGTH (FEET)
86	100
114	125
156	150
211	200
285-970	250

NOTE:
EACH TRANSMITTER TO RAIL WIRE FROM XMT1 AND XMT2 MUST NOT EXCEED THE MAXIMUM LENGTH SPECIFIED IN THE TABLE SHOWN. THE RECEIVER WIRE LENGTH IS NOT CRITICAL. DOES NOT APPLY TO 6 TRACK WIRE APPLICATION.

NEW SHEET

GILBERTS, ILLINOIS
HIGGINS ROAD/RT. 72
M.P. 49.85
BELVIDERE SUBDIVISION
D.O.T.#174 552V

05-21-07 INSTALL FLASHERS AND GATES WITH CWT AT M.P. 49.85 AFE 83170 GRK SSC/JJF	MODIFICATION LEVEL		UNION PACIFIC SIGNAL DESIGN	DES: SSC DIG: SSC CHK: GRK A.F.E. 83170 ID: BEV4985.4X	UNION PACIFIC RAILROAD GILBERTS, ILLINOIS HIGHWAY CROSSING SIGNALS CONTROL CIRCUITS Office of AVP Engineering - Design Omaha, Nebraska
	Q.A. LAST LEVEL CHECKED	DP			DATE 05-21-07
	LAST LEVEL MOD THIS TYPICAL	DP			SHEET 4
	LAST LEVEL BY DESIGNER	DP			DWG 49.85
	CHANGED FROM TYPICAL?	Y			BEV

Minimum Program Steps Report

Location and SIN

DOT Number: 174552V
Milepost Number: 49.85
Site Name: GILBERTS, IL

SIN: 762010010016 *

* Parameter is part of office check number calculation.

MCF and Template Selection

MCF Name: GCP-T6X-01-2.mcf
MCF Revision: 012
MCFCRC: 0DFE7A0C

Template = 1A:6 Trk Bi *

* Parameter is part of office check number calculation.

Minimum Program Steps

TEMPLATE: track 1-Bi, Island
Track 1 : GCP Frequency = 525 Hz
Track 1 : Approach Distance = 2597 ft See Plans
Track 1 : Prime Warning Time = 25 sec *
Track 1 : GCP Transmit Level = Medium Set in Field
Track 1 : Isl Frequency = 10.0 kHz

TEMPLATE: AND 1 XR
AND 1 Enable Used = Yes *

TEMPLATE: IP assignment 1
IN 1.2 = Out Of Service IP 1 *

TEMPLATE: IP assignment SSCC
IN 7.1 = AND 1 XR Enable *

GCP: track 1
Track 1 : Island Distance = 123 ft *

ADVANCED: out of service
OOS Control = OOS IPs *

* Parameter is part of office check number calculation.

Check Numbers

Office Check Number: 5627B59A
Config. Check Number: 5737836B
(Based on MCF Revision 012)

Parameters not part of office check number calculation:

Track 1 : GCP Frequency = 525 Hz
Track 1 : Approach Distance = 2597 ft See Plans
Track 1 : GCP Transmit Level = Medium Set in Field
Track 1 : Isl Frequency = 10.0 kHz

Comments

<none>

Configuration Package File

Filename: BEV4985 174552V.pac
Path: O:\UPRR\JXXD00172\DOCUMENTS\gcp program\
Date/Time: 10:19 AM 9/18/2007

GILBERTS, ILLINOIS
HIGGINS ROAD/RT. 72
M.P. 49.85
BELVIDERE SUBDIVISION
D.O.T.#174 552V

NEW SHEET

				05-21-07 INSTALL FLASHERS AND GATES WITH CWT AT M.P. 49.85 AFE 83170 GRK SSC/JJF	NOTE: Actual OFFSET and ISLAND distances must be entered by field personnel.	UNION PACIFIC SIGNAL DESIGN	DES: SSC DIG: SSC CHK: GRK A.F.E. 83170 ID: BEV4985.4AX	UNION PACIFIC RAILROAD GILBERTS, ILLINOIS HIGHWAY CROSSING SIGNALS CONTROL CIRCUITS Office of AVP Engineering - Design Omaha, Nebraska	DATE 05-21-07 SHEET 4A DWG 49.85 BEV

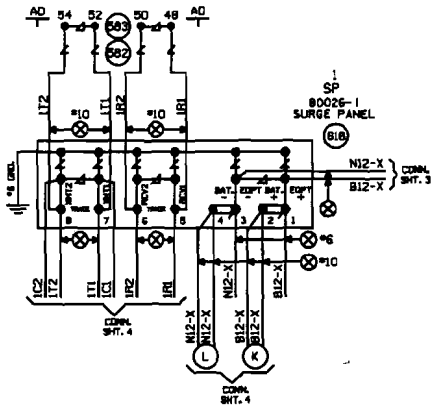

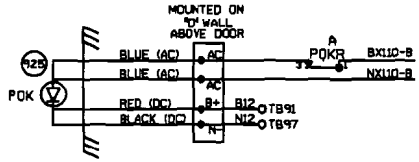

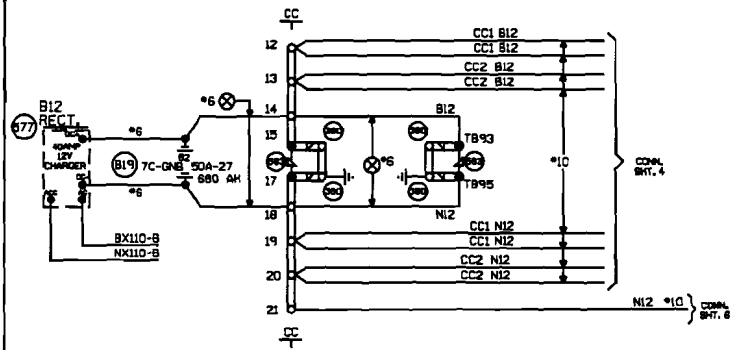

NEW SHEET

GILBERTS, ILLINOIS
HIGGINS ROAD/RT. 72
M.P. 49.85
BELVIDERE SUBDIVISION
D.O.T.#174 552V

05-21-07 INSTALL FLASHERS AND GATES WITH CWT AT M.P. 49.85	MODIFICATION LEVEL		UNION PACIFIC SAFETY FIRST SAFETY	DESN SSC	UNION PACIFIC RAILROAD	DATE 05-21-07
	Q.A. LAST LEVEL CHECKED	DP		DRN SSC	GILBERTS, ILLINOIS	SHEET 5
	LAST LEVEL MOD THIS TYPICAL	DP		CHK GRK	HIGHWAY CROSSING SIGNALS	DWG 49.85
	LAST LEVEL BY DESIGNER	DP		A.F.E. 63170	CONTROL CIRCUITS	BEV
AFE 63170 GRK SSC/JJF	CHANGED FROM TYPICAL?	Y	SIGNAL DESIGN	ID# BEV49.85.5X	Office of AVP Engineering - Design Omaha, Nebraska	

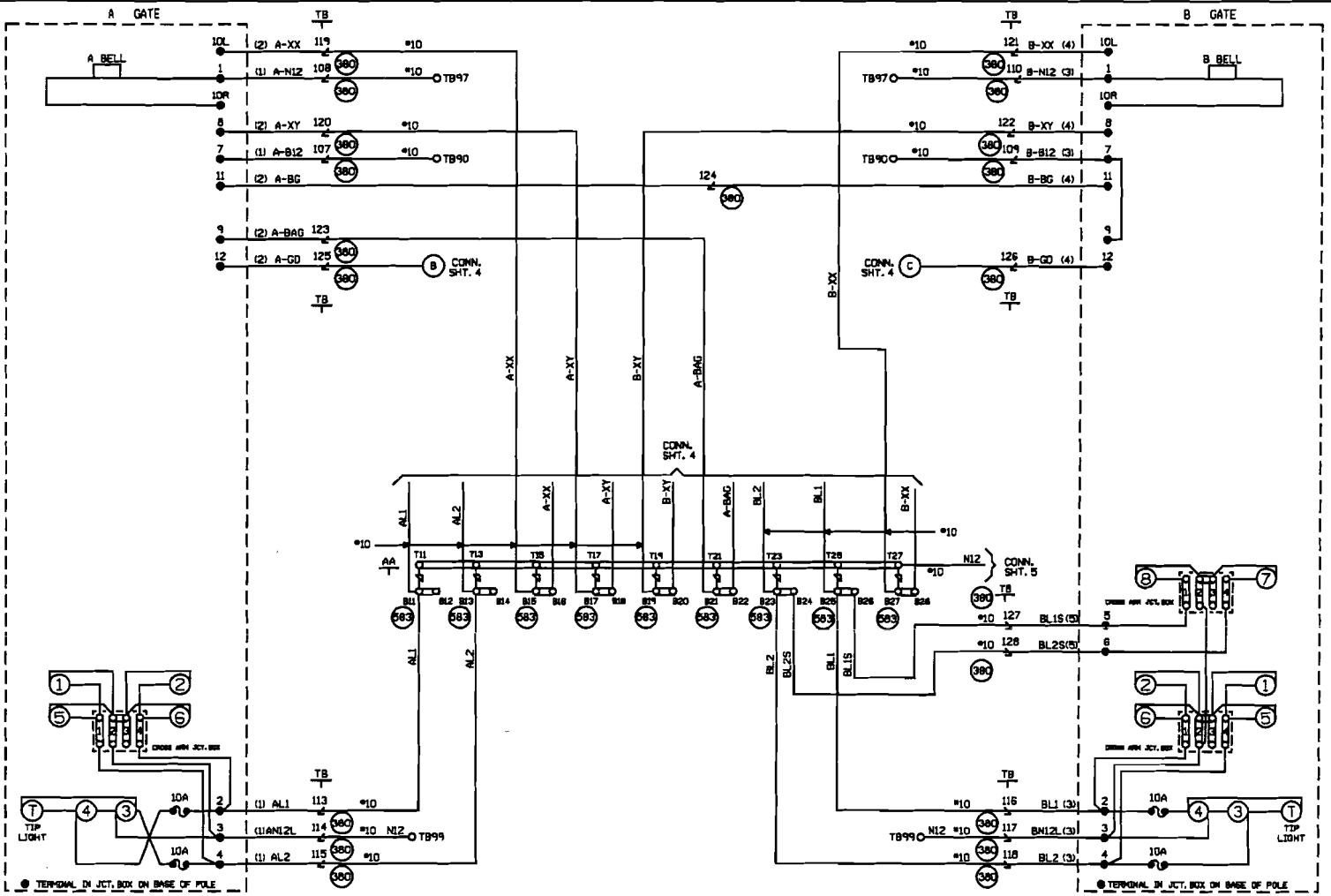

CABLE TABULATION

CABLE NO. 1 5C. NO.6 U.G.B.T.
CABLE NO. 2 7C. NO.14 U.G.B.T.
CABLE NO. 3 5C. NO.6 U.G.B.T.
CABLE NO. 4 7C. NO.14 U.G.B.T.
CABLE NO. 5 2C. NO.6 U.G.B.T.

NEW SHEET

GILBERTS, ILLINOIS
HIGGINS ROAD/RT. 72
M.P. 49.85
BELVIDERE SUBDIVISION
D.O.T.#174 552V

05-21-07 INSTALL FLASHERS AND GATES WITH CWT AT M.P. 49.85 AFE 83170 GRK SSC/JJF	MODIFICATION LEVEL		UNION PACIFIC SAFETY SIGNAL DESIGN	DES: SSC DIG: SSC CHK: GRK A.F.E. 83170 ID: BEV4985.6X	UNION PACIFIC RAILROAD GILBERTS, ILLINOIS HIGHWAY CROSSING SIGNALS CONTROL CIRCUITS Office of AVP Engineering - Design Omaha, Nebraska	DATE 05-21-07 SHEET 6 DWG 49.85 BEV
	Q.A. LAST LEVEL CHECKED	DP				
	LAST LEVEL MOD THIS TYPICAL	DP				
	LAST LEVEL BY DESIGNER	DP				
	CHANGED FROM TYPICAL?	Y				

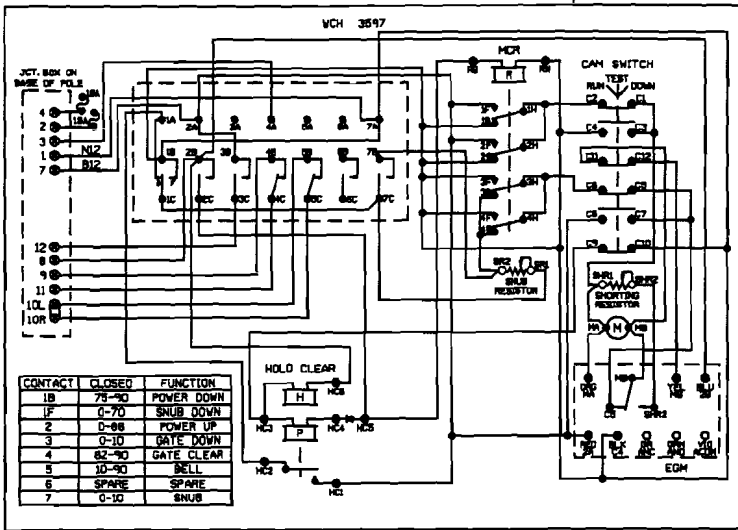

CONTACT	CLOSED	FUNCTION
1B	75-90	POWER DOWN
1F	0-70	SNUB DOWN
2	0-86	POWER UP
3	0-10	GATE DOWN
4	82-90	GATE CLEAR
5	10-90	BELL
6	SPARE	SPARE
7	0-10	SNUB

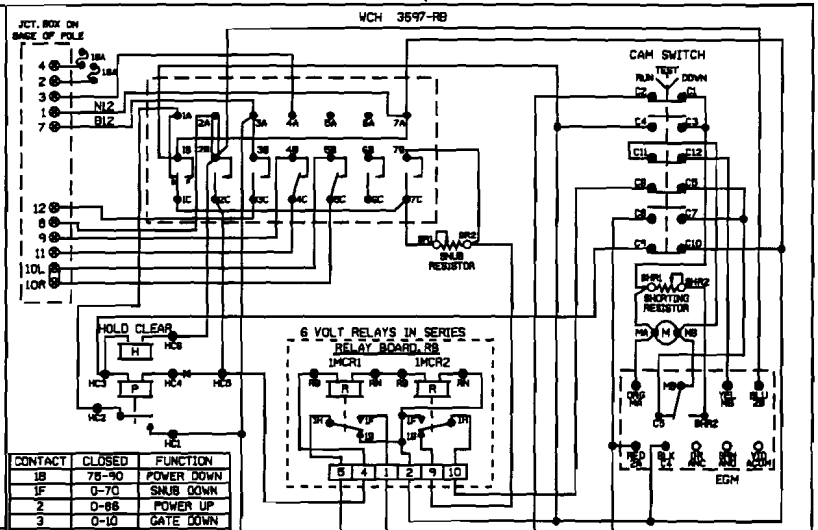

CONTACT	CLOSED	FUNCTION
1B	75-90	POWER DOWN
1F	0-70	SNUB DOWN
2	0-86	POWER UP
3	0-10	GATE DOWN
4	82-90	GATE CLEAR
5	10-90	BELL
6	SPARE	SPARE
7	0-10	SNUB

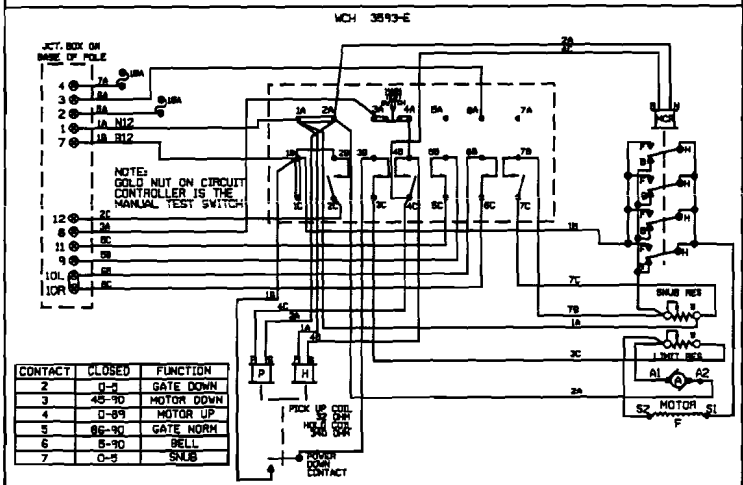

CONTACT	CLOSED	FUNCTION
2	0-5	GATE DOWN
3	45-90	MOTOR DOWN
4	0-89	MOTOR UP
5	86-90	GATE NORM
6	5-90	BELL
7	0-5	SNUB

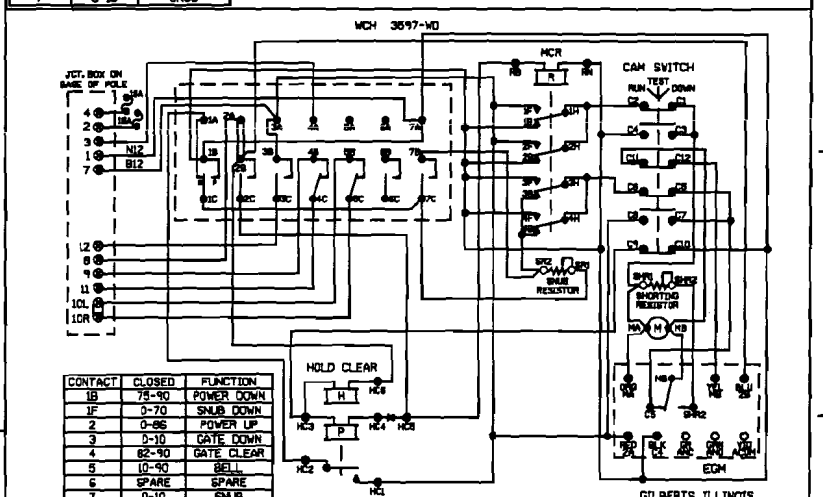

CONTACT	CLOSED	FUNCTION
1B	75-90	POWER DOWN
1F	0-70	SNUB DOWN
2	0-86	POWER UP
3	0-10	GATE DOWN
4	82-90	GATE CLEAR
5	10-90	BELL
6	SPARE	SPARE
7	0-10	SNUB

SHOW TYPE MECH. INSTALLED

ALL MECHANISMS SHOWN IN THE CLEAR POSITION

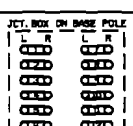

GILBERTS, ILLINOIS
HIGGINS ROAD/RT. 72
M.P. 49.85
BELVIDERE SUBDIVISION
D.O.T.#174 552V

NEW SHEET

05-21-07 INSTALL FLASHERS AND GATES WITH CVT AT M.P. 49.85	NODIFICATION LEVEL		UNION PACIFIC SIGNAL DESIGN	DES: SSC	UNION PACIFIC RAILROAD
	Q.A. LAST LEVEL CHECKED	DP		DIG: SSC	GILBERTS, ILLINOIS
	~~LAST LEVEL MOD THIS TYPICAL~~	DP		CHK: GRK	HIGHWAY CROSSING SIGNALS
	LAST LEVEL BY DESIGNER	DP		A.F.E. 83170	CONTROL CIRCUITS
AFE 83170 GRK SSC/JJF	CHANGED FROM TYPICAL?	N		ID: BEV4985.7X	Office of AVP Engineering - Design Omaha, Nebraska

DATE 05-21-07
SHEET 7
DWG 49.85
BEV

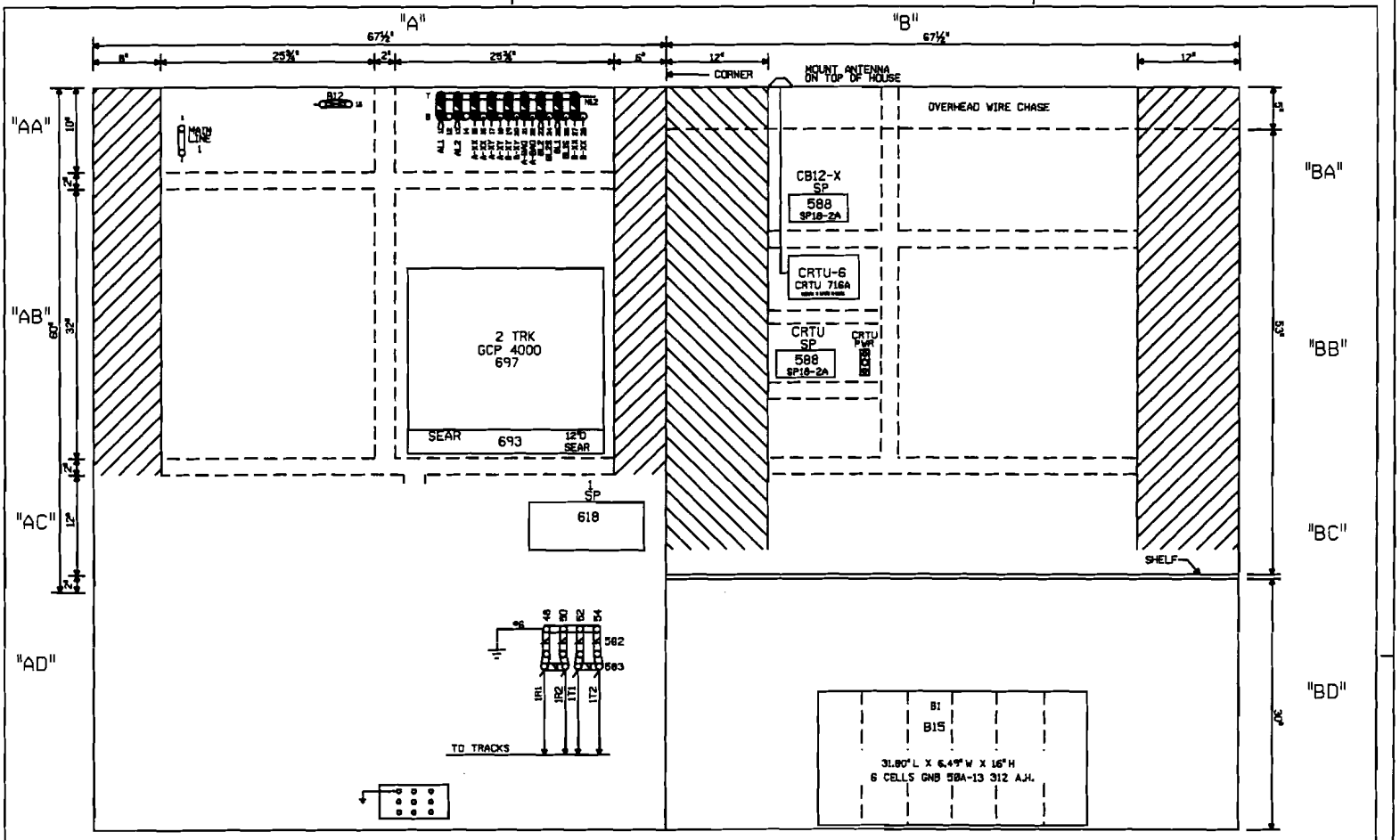

NOTE: ALL DIMENSIONS SHOWN ARE APPROXIMATE.

0 1 2 3 4 FEET

SCALE: 1.5 INCHES = 1 FOOT

NEW SHEET

GILBERTS, ILLINOIS
HIGGINS ROAD/RT. 72
M.P. 49.85
BELVIDERE SUBDIVISION
O.D.T. #174 552V

05-21-07 INSTALL FLASHERS AND GATES WITH CWT AT M.P. 49.85 AFE 83170 GRK SSC/JJF	MODIFICATION LEVEL		UNION PACIFIC SIGNAL DESIGN	DES: SSC	UNION PACIFIC RAILROAD	DATE 05-21-07
	D.A. LAST LEVEL CHECKED	DP		DIG: SSC	GILBERTS, ILLINOIS	SHEET 8
	LAST LEVEL MOD THIS TYPICAL	DP		CHK: GRK	HIGHWAY CROSSING SIGNALS	DWG 49.85
	LAST LEVEL BY DESIGNER	DP		A.F.E. 83170	CONTROL CIRCUITS	BEV
	CHANGED FROM TYPICAL?	Y		ID: BEV4985.8X	Office of AVP Engineering - Design Omaha, Nebraska	

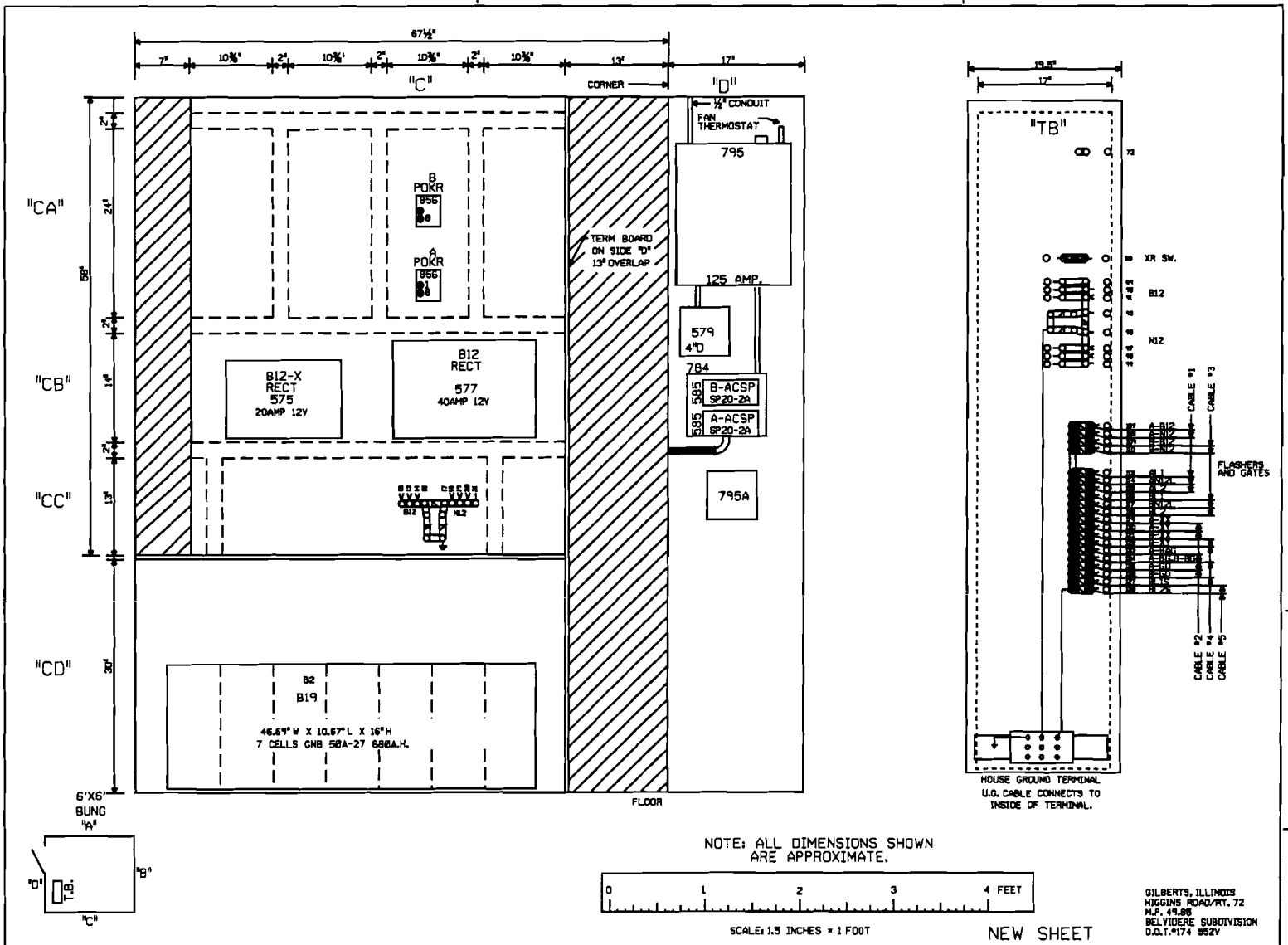

NOTE: ALL DIMENSIONS SHOWN ARE APPROXIMATE.

0 1 2 3 4 FEET

SCALE: 1.5 INCHES = 1 FOOT

NEW SHEET

GILBERTS, ILLINOIS
HIGGINS ROAD/RT. 72
M.P. 49.85
BELVIDERE SUBDIVISION
D.O.T.#174 552V

05-21-07 INSTALL FLASHERS AND GATES WITH CWT AT M.P. 49.85 AFE 63170 GRK SSC/JJF	MODIFICATION LEVEL		UNION PACIFIC SIGNAL DESIGN	DES: SSC	UNION PACIFIC RAILROAD	DATE 05-21-07
	G.A. LAST LEVEL CHECKED	DP		DIG: SSC	GILBERTS, ILLINOIS	SHEET 9
	LAST LEVEL MOD THIS TYPICAL	DP		CHK: GRK	HIGHWAY CROSSING SIGNALS	DWG 49.85
	LAST LEVEL BY DESIGNER	DP		A.F.E. 63170	CONTROL CIRCUITS	BEV
	CHANGED FROM TYPICAL?	Y		ID: BEV4985.9X	Office of AVP Engineering - Design Omaha, Nebraska	

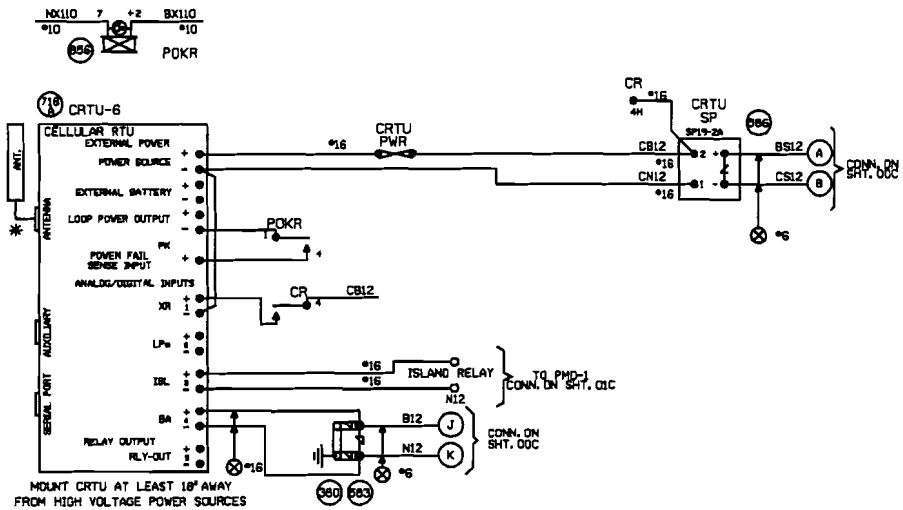

NOTES:

ALL DIODES 1N5060 OR 1N4004 UNLESS OTHERWISE NOTED.
* MOUNT ANTENNA ON TOP OF HOUSE.
ALL WIRES #18 UNLESS OTHERWISE NOTED.
ALL UNUSED 'NC' INPUTS MUST BE TIED HIGH TO BATTERY
ALL UNUSED ANALOG INPUTS MUST BE TIED HIGH TO BATTERY
ALL UNUSED 'NO' INPUTS MUST BE DISCONNECTED
NORMAL STATE FOR ANALOG CHANNELS IS EQUAL TO THE STORED NOMINAL VOLTAGE +120% OR -81%
CRTU FRONT PANEL DISPLAY CHART INDICATES NORMAL STATE

DIGITAL INPUT HIGH, OR POWER FAIL INPUT CLOSED — DIGITAL INPUT LOW, OR POWER FAIL INPUT OPEN

L — LATCH IS SET BECAUSE CRTU DETECTED AN ALARM CONDITION
12.06V L

'sRUN MODE' — 'sRUN MODE-SILENT'
CRTU RADIO IS DISABLED. REPROGRAM CRTU WITH LAPTOP.

ANALOG AND AC INPUT MODULES MUST BE MOUNTED LESS THAN 12" FROM CRTU

UNIT INSTALLATION AND SETUP

R.R. SITE ID WHERE: SSSS = 4 CHARACTER SUBDIVISION ID. FILL WITH PRECEDING ZEROS AS REQUIRED. THE MAIN TRACK SUBDIVISION ID* IS IN THE CURRENT TIMETABLE. INDUSTRIAL LEADS, LEASED, AND LEAD TRACKS LISTED WITHIN THE SUBDIVISION MAY HAVE THEIR OWN UNIQUE SUBDIVISION ID*. DO NOT AUTOMATICALLY USE THE MAIN TRACK SUBDIVISION ID* FOR THESE OTHER TRACKS. ALWAYS DOUBLE CHECK WITH THE MOST CURRENT PRINTED COPY OF THE TIMETABLE.
LLLLLLLL = 8 CHARACTERS USE DOT* AT CROSSINGS, AND USE MP* AT WAYSIDE AND HBD SITES.
FILL WITH PRECEDING DASHES AS REQUIRED.
THE MP* MUST USE A DECIMAL POINT TO SEPARATE NUMBERS.
AA = 2 CHARACTER STATE NAME FOR CROSSINGS.
AA = 'WO' FOR WAYSIDE LOCATIONS. AA = 'HB' FOR HBD SITES.
MUST BE 14 CHARACTERS LONG, NO SPACES ALLOWED.

SITE IDENTIFIER SSSSLLLLLLAA	0015-174552VIL
SIGNAL STRENGTH dBm	
CARRIER ID	
FIRMWARE VERSION	2.3.06
SERIAL NUMBER	
CONFIGURATION NET	MICROBURST
SIGNAL STATUS	
SCADANET STATUS	
SILENCE INTERVAL	60 MINUTES
HEALTHCHECK INTERVAL	EVERY 2 DAYS
ALARM DEFER DELAY	240 MINUTES (4 HOURS)
OPERATION TO RESUME:	RUN
CALIBRATION CONSTANT	
CH4	
POWER SOURCE	

FIELD PROVIDES: SAMPLED NOMINAL VOLTAGES, SCADANET STATUS, CALIBRATION CONSTANTS, SERIAL NUMBER, AND SIGNAL STATUS.

CHANNEL SETUP - STANDARD CONFIGURATION 15sXR,LP#,ISL,BA

CHANNEL NORMAL STATE	SENSE NO/NC	NAME FUNCTION	RECOGNITION DELAY SECONDS ACTIVE	RECOGNITION DELAY SECONDS NORMAL	RETURN TO NORMAL	REPORTING MODE	ALARM LINKED CHANNEL	ALARM LINKED CRITERIA	EVENT LOGGING ENABLED OPTIONS
POWER FAIL (CH0)	POWER FAIL DETECT NO	PFin-PK AC POWER FAIL	7,200 ALARM	300 NORMAL	ENABLED	ALERT	DISABLED	N/A	
CH1	DIGITAL INPUT NO	CH1-XR XR DOWN TO LONG	1,800 ALARM	1 NORMAL	ENABLED	ALERT	DISABLED	N/A	
CH2	DIGITAL INPUT NO	CH2-LP# LIGHT OUT GATES NOT UP/DOWN XING CNTRLR FAILED	120 ALARM	10 NORMAL	ENABLED	ALERT	DISABLED	N/A	
CH3	DIGITAL INPUT NC	CH3-ISL ISLAND OCCUPIED DAX, PREEMPT WARNING TIME	1 ACTIVE	1 NORMAL	DISABLED	STATUS ONLY	DISABLED	N/A	DIGITAL EVENTS
CH4 STORED NOMINAL VOLTAGE	ANALOG INPUT N/A	CH4-BA/V BATTERY MONITOR BATTERY LOW	300 ALARM	300 NORMAL	DISABLED	ALERT W/UPDATE	DISABLED	N/A	CH1-XR CH3-ISL
POWER SOURCE (CH5)	ANALOG INPUT N/A	PS-BA/V BATTERY MONITOR BATTERY LOW	300 ALARM	300 NORMAL	DISABLED	ALERT W/UPDATE	DISABLED	N/A	

ANALOG CHANNEL	USEFUL RANGE VOLTS LOW	USEFUL RANGE VOLTS HIGH	DISPLAYED RANGE VOLTS LOW	DISPLAYED RANGE VOLTS HIGH	RELATIVE ALARM POINT LOW	RELATIVE ALARM POINT HIGH	ABSOLUTE ALARM POINT LOW	ABSOLUTE ALARM POINT HIGH	AUTOMATIC UPDATE INTERVAL	STORED NOMINAL VOLTAGE	SAMPLED NOMINAL VOLTAGE
CH4	0.0	30.00	0.0	30.00	81%	120%	10.0	26.0	10 DAYS	12.89	
POWER SOURCE	0.0	30.00	0.0	30.00	81%	120%	10.0	26.0	10 DAYS	12.89	
RELAY OUTPUT	NAME RLY-OUT		ACTIVE SET-UP-OPEN		NORMAL CLR-ON-CLOSE		PULSE DURATION		15 SECONDS	CHART'S REV'D 3-2-01	

MAINTENANCE OPERATIONS

TO START OR ABORT ANY PROCEDURE
1. PRESS THE 'CANCEL' BUTTON FIRST.

WHEN RESPONDING TO A CALL, PUT THE CRTU IN THE 'SILENCE ALARMS' MODE

1. PRESS 'SELECT' AND THEN '+ ARROW' BUTTON UNTIL
   DISPLAY: ACTION?
   SILENCE ALARMS
2. PRESS THE 'SELECT' BUTTON TWICE.
3. CORRECT PROBLEM AND SIMULATE NORMAL TRAIN MOVEMENT THROUGH THE LOCATION
4. EXAMINE EACH CHANNEL ON THE CRTU
5. PRESS THE '+/- ARROW' BUTTON
   VERIFY ALL CHANNELS INDICATE A NORMAL STATE
   NORMAL STATES ARE ON THE CHANNEL SETUP CHART

CLEAR TIMERS, LATCHES AND SEND ALL NORMAL

1. DO STEPS #1 - #5 ABOVE, AND PRESS 'CANCEL'.
2. PRESS 'SELECT' AND THEN '- ARROW' BUTTON UNTIL
   DISPLAY: ACTION?
   SERVICE MODE
3. PRESS 'SELECT' AGAIN TO RESET TIMERS, AND IF
   DISPLAY: SERVICE MODE
   ALL NORMAL
4. PRESS 'SELECT' AGAIN TO CLEAR LATCHES, AND SEND ALL NORMAL. SKIP STEPS #5-#6.
5. HOWEVER, IF ALARMS ARE NOT CLEARED,
   DISPLAY: SERVICE MODE
   ALARMS PENDING/PRESENT
6. PRESS 'CANCEL', CORRECT PROBLEM AND REPEAT STEPS #2 THRU #5 UNTIL ALL NORMAL SENT.

TO CANCEL THE 'SILENCE ALARMS' MODE

1. PRESS 'SELECT' AND THEN '+ ARROW' BUTTON UNTIL
   DISPLAY: ACTION?
   CANCEL SILENCE
2. PRESS THE 'SELECT' BUTTON AGAIN

EXAMINE & SET BATTERY VOLTAGE NOMINAL VALUE

1. PRESS THE '+ ARROW' OR '- ARROW' BUTTON UNTIL THE DESIRED CHANNEL IS DISPLAYED.
   DISPLAY: PS-BA
   13.83V NORMAL
2. VERIFY THE DISPLAYED READING WITH A DIGITAL VOLTMETER
3. PRESS THE 'SELECT' BUTTON AND THE CRTU DISPLAY WILL SWITCH BETWEEN CURRENT/SAVED NOMINAL VOLTAGE VALUES.
   DISPLAY: NOMINAL ON #67 (CURRENT)
   13.83
   DISPLAY: SAVED NOMINAL @ (STORED)
   12.89
4. PRESS THE 'SELECT' BUTTON AND THE CURRENT OR 'NOMINAL ON' VALUE WILL BE SAMPLED AND STORED AS THE 'SAVED NOMINAL' VALUE
5. VERIFY THE 'NOMINAL ON' AND 'SAVED NOMINAL' VALUES ARE EQUIVALENT. REPEAT STEPS #1 THRU #3 & PRESS THE 'CANCEL' BUTTON.

TO BE VOIDED
WO 83170 05-21-07

GILBERTS, ILLINOIS
ELGIN ST HWY 72
M.P. 49.86
BELVIDERE SUBDIVISION
O.O.T.#174 552V
PROJ.#

		REV. 11-10-01 INSTALLED CRTU W.O. 3327 9-18-01 PCM/WITT/WITT/EML	MODIFICATION LEVEL: Q.A. LAST LEVEL CHK'D. / LAST LEVEL MOD. THIS TYP. / LAST LEVEL BY DESIGNER / CHANGED FROM TYP.? Y/N	UNION PACIFIC SAFETY SIGNAL DESIGN	DES: WITT DKD; DRG: WITT DKD; CHK: EML; A.F.E. 3327; ID=BEV04986.00AC

UNION PACIFIC RAILROAD
WEST CHICAGO, ILLINOIS
TO END OF TRACK
CROSSING CIRCUITS
OFFICE OF CHIEF ENG'R OMAHA NEBR.

DATE 07-01-01
SHEET .00AC
DWG 49.86
BEV

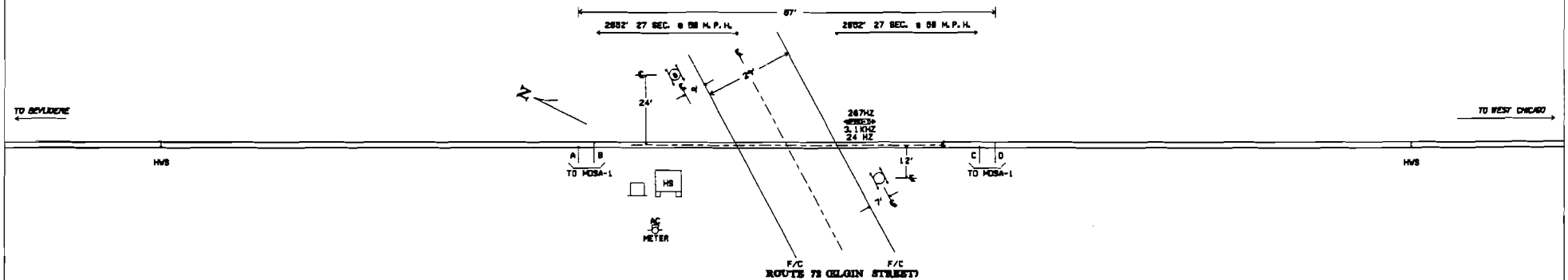

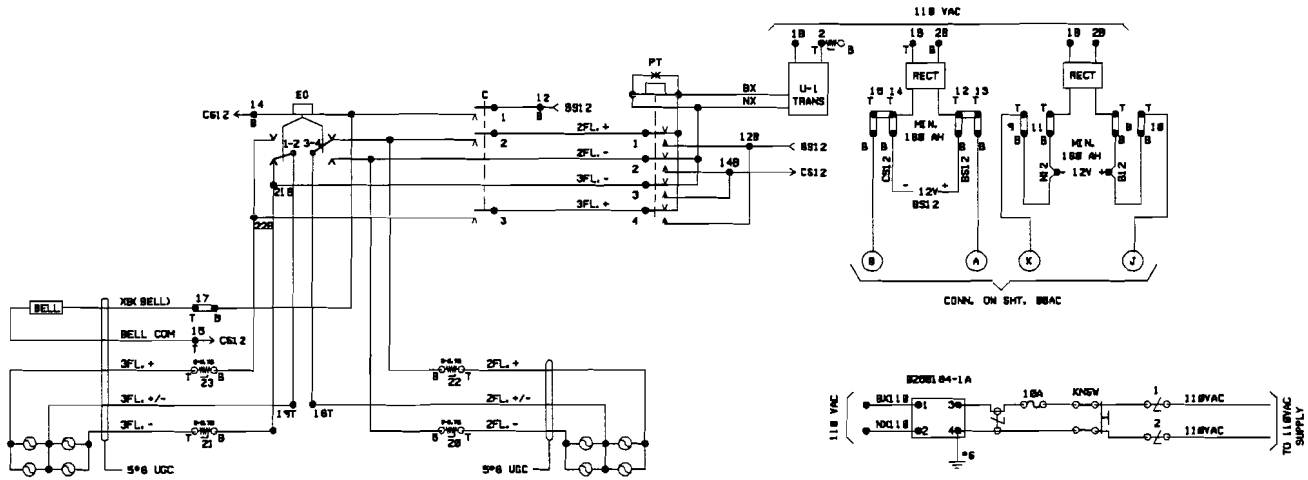

- NOTES -

1. HIGH SINGLE TO BE A MINIMUM OF 25' FROM CENTERLINE OF TRACK AND 30' FROM EDGE OF ROADWAY.
2. THE C-PT HAVE HEAVY-DUTY CONTACTS.
3. ADJUST LIGHT CIRCUITS (AC & DC) TO OBTAIN A MIN. OF 9.2 VOLTS TO A MAX OF 9.8 VOLTS AT LAMPS.
4. THE PT WILL OPERATE ON 18-15 VOLT AC.
5. FLASHER VARIABLE RES. UNITS TO BE 6.7 OHMS.
6. USE 18 VOLT-25 WATT LAMPS.
7. USE #18 STRANDED WIRE ON FLASHER CIRCUITS.
8. PLANVIEW NOT TO SCALE.
9. F/C = FACE OF CURB.

TO BE VOIDED

WO 83070 08-21-07

REVISIONS		
REV.	4/22/98	
SPEED UPGRADE W.O. 17985	2/98	JWK/KKR/ABS
REV. INSTALLED CRTU W.O. 3327 9-18-01	11-18-01	PCN/WBTT/WTT/EML

UNION PACIFIC

GILBERTS, IL
ROUTE 72
(ELGIN STREET)
M.P. 49.86

SIGNAL DESIGN

BEV04986.00C

SYSTEM#TIME#####

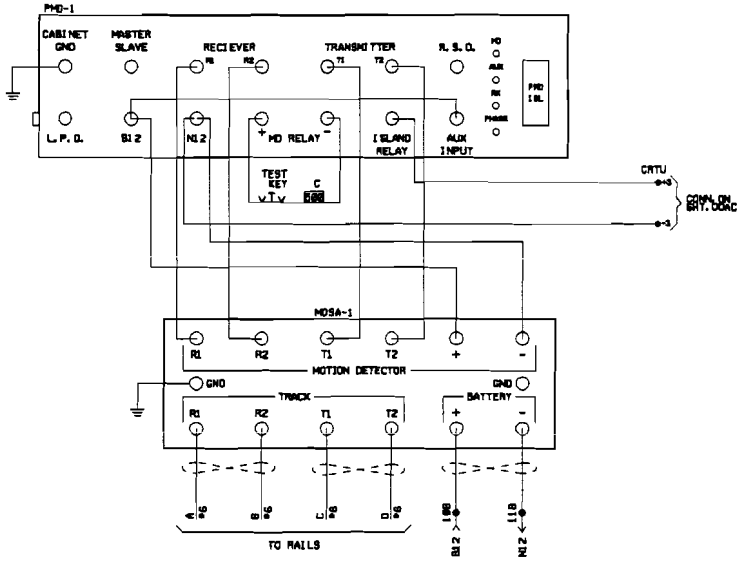

PMD-1 ( ) SWITCH OPTION TABLE

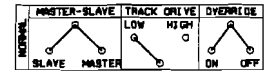

PMD-1 ( ) FREQ. --- 267HZ

ISLAND CARRIER FREQ. --- 3.1KHZ

ISLAND SUBTONE FREQ. --- 24 HZ

WIRING REQUIREMENTS

THE FOLLOWING WIRE GAUGES WILL BE CONSIDERED THE MINIMUM ACCEPTABLE FOR PROPER OPERATION

POWER LEADS	* 18 (MUST BE TWISTED)
CONNECTIONS FROM PMD CABINET TO MOSA-1	* 14 AWG (WIRES ON TERMS R1, R2 T1 & T2 MUST BE TWISTED.)
TRACK LEADS	* 6 AWG (ALL WIRES MUST BE TWISTED & WELDED.)
RELAY OUTPUT & AUXILIARY INPUT	* 20 (MUST BE TWISTED)
GROUND WIRE FROM MOSA-1 TO CAGE	*6 AWG DIRECTLY TO PRIME GROUND TERMINALS (NO SHARP BENDS)

TO BE VOIDED

WO 83170 05-21-07

REVISIONS

REV. 4/2/96
SPEED UPGRADE
W.O. 17985 2/96
JWN/MAR/ABG

REV. 11-18-01
INSTALLED CRTU
W.O. 3327
9-18-01
PCM/WITT/WITT/EML

UNION PACIFIC GILBERTS, IL
ROUTE 72
(ELGIN STREET)
M.P. 49.86

QUALITY PRODUCTIVITY SAFETY
SIGNAL DESIGN

BEV04986.01C