INDEX

CONTENTS

SH. NO.		REVISION NO. 1	2	3	4	5	6	7	8	9
I01	INDEX AND REVISIONS									
S01	TRACK AND SIGNAL PLAN									
P01	MINIMUM PROGRAM STEPS REPORT CWE 50									
E01	POWER DISTRIBUTION									
C01	DETECTION DEVICE CONSIST CWE 50									
C02	DETECTION CIRCUITRY CWE 50									
C03	DETECTION CIRCUITRY CWE 50									
C04	CROSSING WARNING DEVICE GATE CIRCUITRY									
C05	CROSSING WARNING DEVICE LIGHT CIRCUITRY									
C06	CROSSING WARNING DEVICE CIRCUITRY									
C07	SEAR III CONFIGURATION & FUNCTIONS									
C08	ELECTROCODE 4 PLUS CIRCUITS									

= PLANS SENT TO FIELD (DISTRIBUTED)

= PLANS AS-IN-SERVICED (UP TO DATE)

REVISIONS

REV. NO.	PROJECT NO.	DESIGN DATE	IN SERVICE DATE	REVISION DATE
1	IL2006015	08-15-07		
1	IL2007015	08-15-07		

TO BE COMPLETED ON A.I.S.

NEW WORK

SAFETRAN systems

PROJECT #. IL2006015
PROJECT #. IL2007015
DES/CHKD BY. DCK/SWS
DATE. 08 15 07

= NOTE

CSX TRANSPORTATION

RAIL TRANSPORT GROUP ENGINEERING
COMMUNICATIONS AND SIGNALS

CP GALE TO WILLOWS

CALLAHAN (546413E)

INDEX AND REVISIONS

JEWETT, IL M.P. OS-127.50

DESIGNED	DIGITIZED	CHECKED	DATE
SAF/DCK	SAF/DCK	SAF/SWS	08-15-07

DRAWING	SHEET NO	FILE	SHEET
8406-1275	1	OS12750	I01

4K.10:
REV. 12 19-26

DESIGN DATE	REV. NO.
08-15-07	1

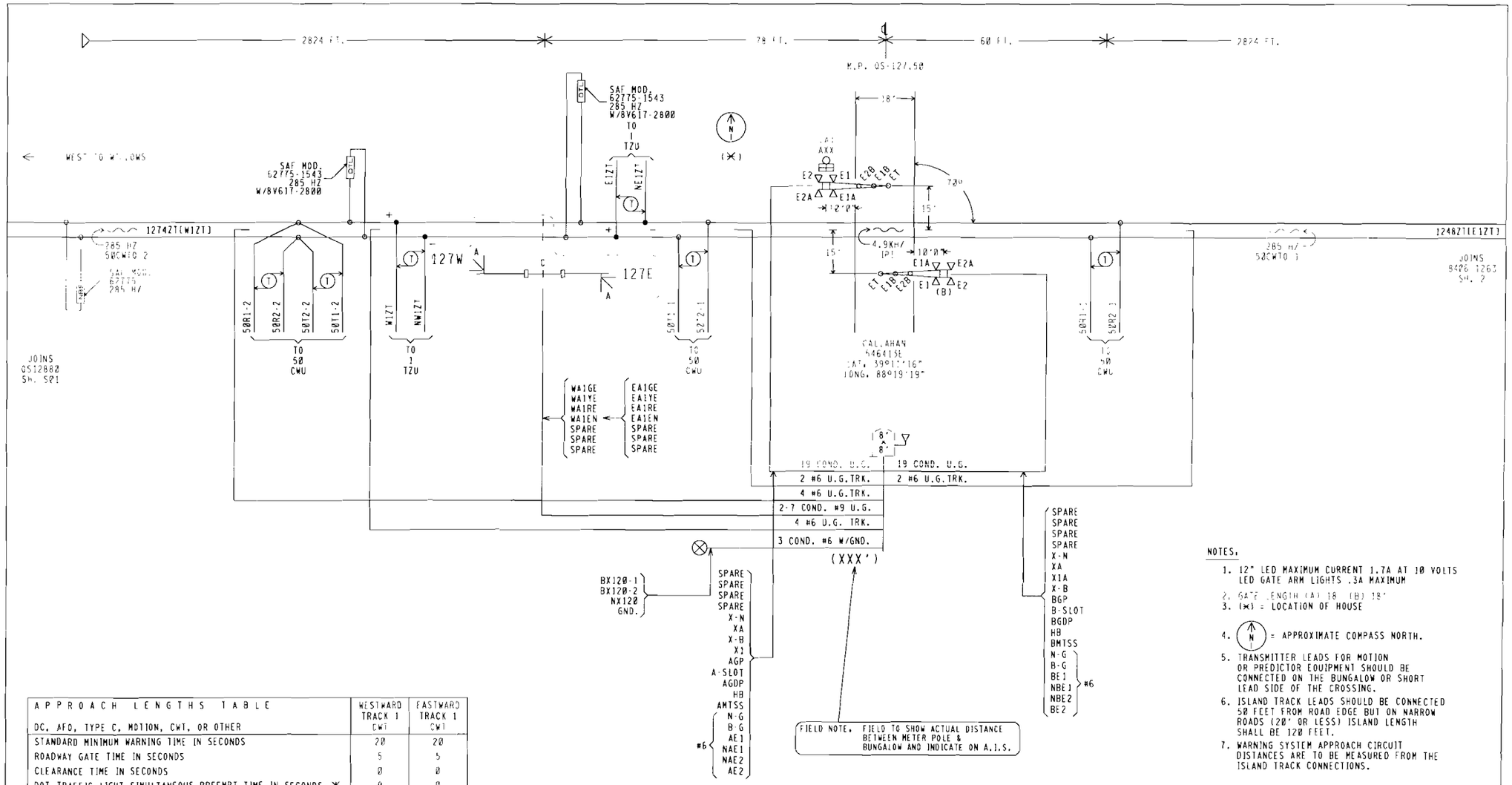

NOTES.

1. 12" LED MAXIMUM CURRENT 1.7A AT 10 VOLTS LED GATE ARM LIGHTS .3A MAXIMUM
2. GATE LENGTH (A) 18' (B) 18'
3. (✱) = LOCATION OF HOUSE
4. (N) = APPROXIMATE COMPASS NORTH.
5. TRANSMITTER LEADS FOR MOTION OR PREDICTOR EQUIPMENT SHOULD BE CONNECTED ON THE BUNGALOW OR SHORT LEAD SIDE OF THE CROSSING.
6. ISLAND TRACK LEADS SHOULD BE CONNECTED 50 FEET FROM ROAD EDGE BUT ON NARROW ROADS (20' OR LESS) ISLAND LENGTH SHALL BE 120 FEET.
7. WARNING SYSTEM APPROACH CIRCUIT DISTANCES ARE TO BE MEASURED FROM THE ISLAND TRACK CONNECTIONS.

APPROACH LENGTHS TABLE DC, AFO, TYPE C, MOTION, CWT, OR OTHER	WESTWARD TRACK 1 CWT	EASTWARD TRACK 1 CWT
STANDARD MINIMUM WARNING TIME IN SECONDS	20	20
ROADWAY GATE TIME IN SECONDS	5	5
CLEARANCE TIME IN SECONDS	0	0
DOT TRAFFIC LIGHT SIMULTANEOUS PREEMPT TIME IN SECONDS ✱	0	0
DESIGNED WARNING TIME FOR TRAINS AT TIME TABLE SPEED	25 SEC.	25 SEC.
DOT TRAFFIC LIGHT ADVANCE PREEMPT TIME IN SECONDS ✱	0	0
CONTROL EQUIPMENT DECISION TIME IN SECONDS	5	5
DESIGNED DETECTION TIME FOR TRAINS AT TIME TABLE SPEED	30 SEC.	30 SEC.
TIME TABLE MAXIMUM TRAIN SPEED IN MILES PER HOUR	60	60
BUFFER SPEED IN MILES PER HOUR	5	5
TOTAL WARNING SYSTEM DESIGN SPEED IN MILES PER HOUR	65	65
APPROACH DISTANCE TO ISLAND EDGE IN FEET	2824	2824
HALF WIDTH OF ISLAND IN FEET	78	60
APPROXIMATE MILE POSTS FOR APPROACH CIRCUIT	128.05	126.95

✱AUTHORIZING AGENCY. NONE
✱DATE OF REQUIREMENT. NONE
✱AMOUNT OF TIME (SEC.). NONE

NEW WORK

SAFETRAN Systems

PROJECT #. IL2006015
PROJECT #. IL2007015
DES/CHKD BY. DCK/SWS
DATE. 08 15 07

= NOTE

4K.S01
REV. 12 22 06

CSX TRANSPORTATION
RAIL TRANSPORT GROUP ENGINEERING
COMMUNICATIONS AND SIGNALS

CP GALE TO WILLOWS
CALLAHAN (546413E)
TRACK AND SIGNAL PLAN
JEWETT, IL M.P. QS-127.50

DESIGN DATE	REV. NO.	DRAWING	SHEET NO	FILE	SHEET
08-15-07	1	8406-1275	2	QS12750	501

DESIGNED	DIGITIZED	CHECKED	DATE
SAF/DCK	SAF/DCK	SAF/SWS	08-15-07

Minimum Program Steps Report

Location and SIN

DOT Number, 546413E
Milepost Number, OS-127.50
Site Name, CALLAHAN (800E)

SIN, 712541200816 *

* Parameter is part of office check number calculation.

MCF and Template Selection

MCF Name, GCP-T6X-01-2.mcf
MCF Revision, 012
MCFCRC, 0DFE7A0C

Template : 10.3 Uni pairs *

* Parameter is part of office check number calculation.

Minimum Program Steps

TEMPLATE, track 1-Uni, Island
Track 1 , GCP Frequency = 285 Hz
Track 1 , Approach Distance = 2824 ft See Plans
Track 1 , Prime Warning Time = 25 sec *
Track 1 , GCP Transmit Level = High Set in Field
Track 1 , Uni/Bi/Sim-Bidirnl = Sim. Bidirnl *
Track 1 , Isi Frequency = 4.9 kHz
Track 1 , Island Distance = 138 ft Verify in Field

TEMPLATE, track 2-Uni,No Island
Track 2 , GCP Frequency = 285 Hz
Track 2 , Approach Distance = 2824 ft Verify in Field
Track 2 , Prime Warning Time = 25 sec *
Track 2 , GCP Transmit Level = High Set in Field
Track 2 , Uni/Bi/Sim-Bidirnl = Sim. Bidirnl *

TEMPLATE, SSCC
SSCC-1 Number of GDs = 1 *
SSCC-2 Number of GPs = 1 *
SSCC-2 Number of GDs = 1 *

TEMPLATE, IP assignment SSCC
IN 7.2 = Not Used *
IN 8.2 = Out Of Service IP 1 *
IN 8.4 = GD 2.1 *
IN 8.5 = GP 2.1 *

TEMPLATE, SEAR
SP 3.1 = Not Used *

ADVANCED, out of service
OOS Control = Display OOS IPs *

ADVANCED, out of service 2
T2 OOS Control = OOS Input 1 *

ADVANCED, site options
Daylight Savings = On *

SSCC, 1
SSCC-1 Gate Delay = 5 sec *
SSCC 1 , Flash Rate = 55 *
SSCC 1 , Lamp Neutral Test = Off *

SSCC, 2
SSCC-2 Gate Delay = 5 sec *
SSCC 2 , Flash Rate = 55 *
SSCC 2 , Lamp Neutral Test = Off *

SEAR
DI 1 = Gnd Flt Tester 1 *
DI 2 = Gnd Flt Tester 2 *
Rly 1 = Ground Fault Test *
Rly 2 = AC Control *

SEAR, slot 7-8 inputs
IN 7.1 = TSS 1 *
IN 8.1 = TSS 2 *
IN 8.3 = POK 2 *

* Parameter is part of office check number calculation.

Check Numbers

Office Check Number, 39F1AE66
Config. Check Number, 602BA7FA
(Based on MCF Revision 012)

Parameters not part of office check number calculation

Track 1 , GCP Frequency = 285 Hz
Track 1 , Approach Distance = 2824 ft See Plans
Track 1 , GCP Transmit Level = High Set in Field
Track 1 , Isi Frequency = 4.9 kHz
Track 1 , Island Distance = 138 ft Verify in Field
Track 2 , GCP Frequency = 285 Hz
Track 2 , Approach Distance = 2824 ft Verify in Field
Track 2 , GCP Transmit Level = High Set in Field

NEW WORK

SAFETRAN Systems

PROJECT #, 112006015
PROJECT #, 112007015
DES/CHKD BY, DCK/SWS
DATE, 08 15 07

4K.P01
REV. 12 21 06

CSX TRANSPORTATION
RAIL TRANSPORT GROUP ENGINEERING
COMMUNICATIONS AND SIGNALS

CP GALE TO WILLOWS
CALLAHAN (546413E)
MINIMUM PROGRAM STEPS REPORT CWE-50
JEWETT, IL M.P. OS-127.50

DESIGN DATE	REV. NO.	DRAWING	SHEET NO	FILE	SHEET
08-15-07	1	B406-1275	3	OS12750	P01

DESIGNED	DIGITIZED	CHECKED	DATE
SAF/DCK	SAF/DCK	SAF/SWS	08-15-07

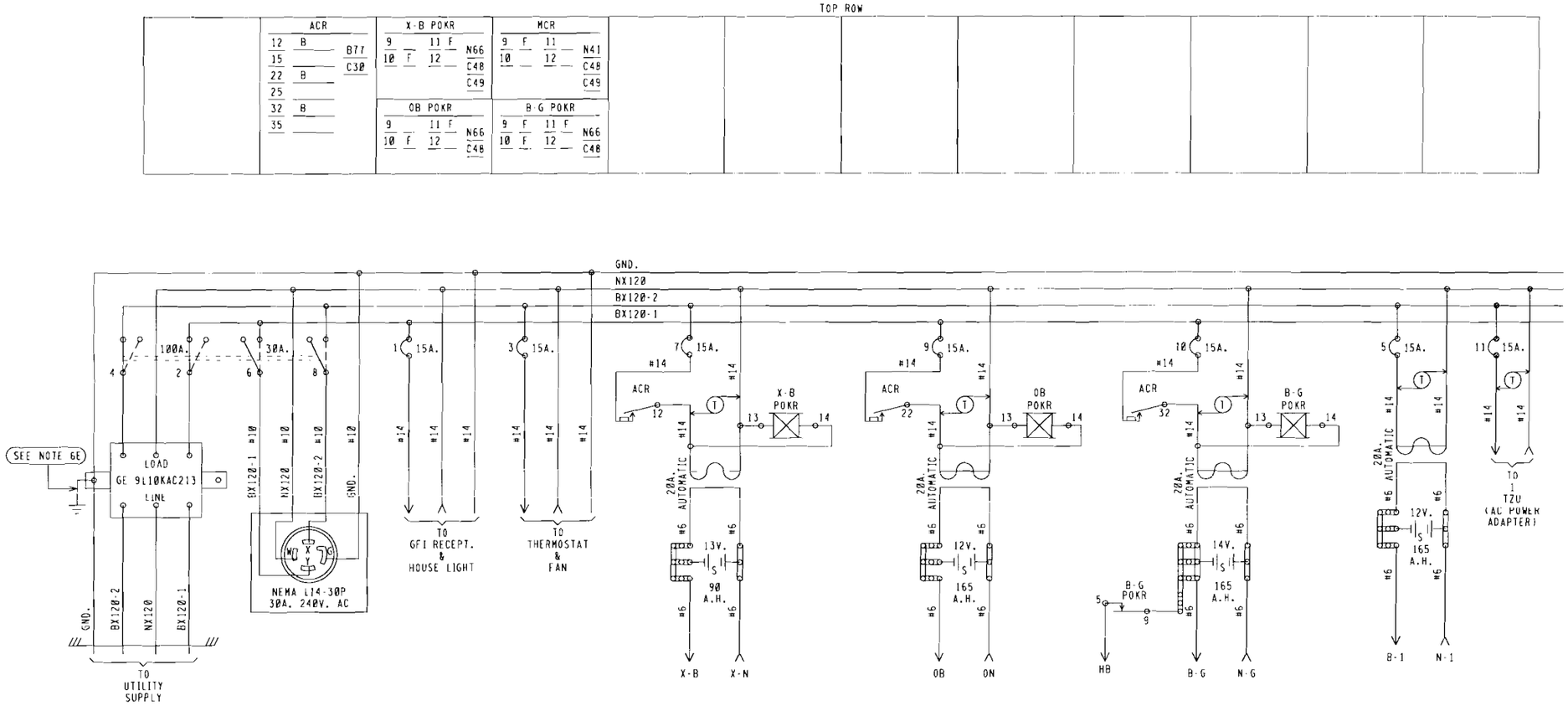

BX120-1	BX120-2
16.0 AMPS	14.0 AMPS

MAXIMUM LOAD
CALCULATED PER SS360

NOTES.

1 - REFERENCES ARE PER SCMS-13.
2 - ARRESTERS ARE PER SS382.
3 - SHELF RELAY PLACEMENT ON CONSIST CHART HAS NO SIGNIFICANCE.
4 - PLUG-IN RELAYS ARE VIEWED FROM THE FRONT OF RACK.
5 - BATTERY A.H. CAPACITY SHOWN IS THE MINIMUM REQUIREMENT.
6 - WIRING
  A - FEED TO ALL BUSSES, LIGHT CIRCUITS, MOTOR CIRCUITS TO BE #10 FLEX.
  B - 120-VOLT FEED FROM ENTRANCE TO POWER BUSS TO BE #10 FLEX.
  C - ALL TRACK WIRES TO BE #10 FLEX.
  D - ALL OTHERS TO BE #16 FLEX UNLESS NOTED.
  E - GROUND WIRE NOT NECESSARY WHEN GE ARRESTER IS MOUNTED ON GROUND PLANE OR METAL ENCLOSURE AFFIXED DIRECTLY TO BUNGALOW METALLIC STRUCTURAL MEMBER.
7 - CIRCUIT INTERRUPTERS 2 & 4 ARE MECHANICALLY INTERLOCKED WITH CIRCUIT INTERRUPTERS 6 & 8.

1TZU ELECTRO CODE 4 PLUS CONFIGURATION "A" FRONT VIEW

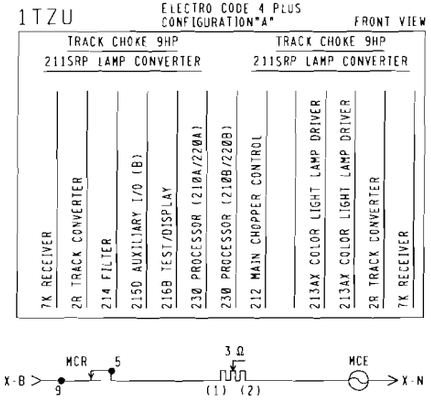

NEW WORK

SAFETRAN systems

PROJECT #: IL2006015
PROJECT #: IL2007015
DFS/CHKD BY: DCK/SWS
DATE: 08 15 07
= NOTE

4000GCP.E01
REV. 04-14-07

8'X 8' RELAY HOUSE W/FARADAY SHIELD

CSX TRANSPORTATION
RAIL TRANSPORT GROUP ENGINEERING
COMMUNICATIONS AND SIGNALS

CP GALE TO WILLOWS
CALLAHAN (546413E)
POWER DISTRIBUTION
JEWETT, IL M.P. QS-127.50

DESIGNED	DIGITIZED	CHECKED	DATE
SAF/DCK	SAF/DCK	SAF/SWS	08-15-07

DESIGN DATE	REV. NO.	DRAWING	SHEET NO	FILE	SHEET
08-15-07	1	8406-1275	4	QS12750	E01

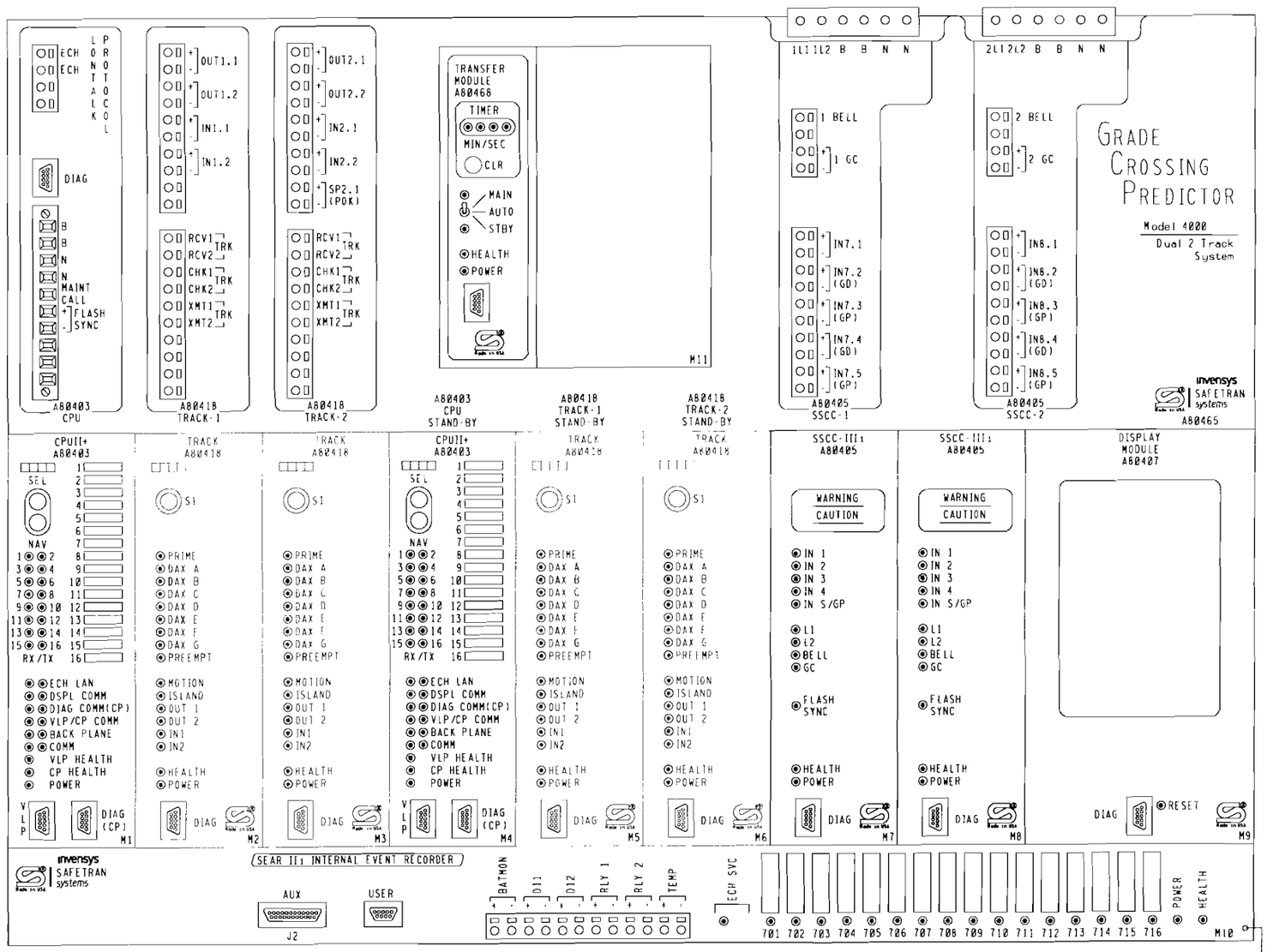

DIMENSIONS 23.25"W X 22.15"H X 12.38"D

GCP 4000 APPLICATION NOTES.

1. THE GRADE CROSSING PREDICTOR (GCP) IS A MODULAR MICROPROCESSOR CONTROLLED SYSTEM THAT IS DEPLOYED TO CONTINUALLY MONITOR THE APPROACHES TO RAILROAD GRADE CROSSINGS AND TO CONTROL THE LAMPS, GATES AND BELLS ASSOCIATED WITH THOSE CROSSINGS. WHEN EQUIPPED WITH THE SEAR II1 MODULE THE GCP 4000 WILL RECORD EVENTS AND REPORT ALARMS WHEN CONNECTED TO AN OFFICE SYSTEM.

2. THE GCP 4000 GCP (A80465) IS A TWO TRACK REDUNDANT UNIT CAPABLE OF DRIVING 4 INDEPENDENT FLASHER AND GATE SIGNALS AND RECORDING EVENTS AND REPORTING ALARMS. THE STANDARD A80465 INCLUDES THE FOLLOWING MODULES.

SLOT	MODULE	FUNCTION	PART NO.
M1	CPU-II+	MAIN	A80403
M2	TRACK 1	MAIN	A80418
M3	TRACK 2	MAIN	A80418
M4	CPU-II+	STANDBY	A80403
M5	TRACK 1	STANDBY	A80418
M6	TRACK 2	STANDBY	A80418
M7	SSCC-III1	A SIGNAL	A80405
M8	SSCC-III1	B SIGNAL	A80405
M9	DISPLAY MODULE		A80407
TOP CENTER	TRANSFER UNIT		A80468
LOWER BAY	SEAR II1	RECORDER	A80410
OPTIONAL MODULES.			A80413
RIO MODULE			

3. EACH TRACK MODULE HAS TWO PROGRAMMABLE INPUTS AND TWO PROGRAMMABLE OUTPUTS.

4. THE SEAR II1 INTERNAL EVENT RECORDER HAS INPUTS FOR ONE BATTERY MONITOR, TWO NON-VITAL INPUTS AND TWO PROGRAMMABLE RELAY DRIVES (HEEL/FRONT).

5. LOCATED ON THE FRONT OF EACH MODULE THERE ARE LED LIGHTS TO INDICATE THE ACTIVITY OF CERTAIN FUNCTIONS OCCURRING INSIDE THE GCP.

6. BETWEEN SLOT 1 & 2 THERE IS A CHASSIS INDENTIFICATION CHIP (CIC) SOCKET AND AN ECD CONNECTOR (DB-25 FEMALE).

7. UPON THE FAILURE OF A MODULE IN SLOTS M1-M3 THE AUTOMATIC TRANSFER UNIT SWITCHES TO THE STANDBY MODULES IN SLOTS M4-M6.

NEW WORK

SAFETRAN systems

PROJECT #. IL2006015
PROJECT #. IL2007015
DES/CHKD BY. DCK/SWS
DATE. 08 15 07

CSX TRANSPORTATION
RAIL TRANSPORT GROUP ENGINEERING
COMMUNICATIONS AND SIGNALS

CP GALE TO WILLOWS
CALLAHAN (546413E)
DETECTION DEVICE CONSIST CWE-50
JEWETT, IL M.P. OS-127.50

4K-CHASSIS.DGN
REV. 12 22-06

DESIGNED	DIGITIZED	CHECKED	DATE
SAF/DCK	SAF/DCK	SAF/SWS	08-15-07

DESIGN DATE	REV. NO.	DRAWING	SHEET NO	FILE	SHEET
08-15-07	1	8406-1275	5	OS12750	C01

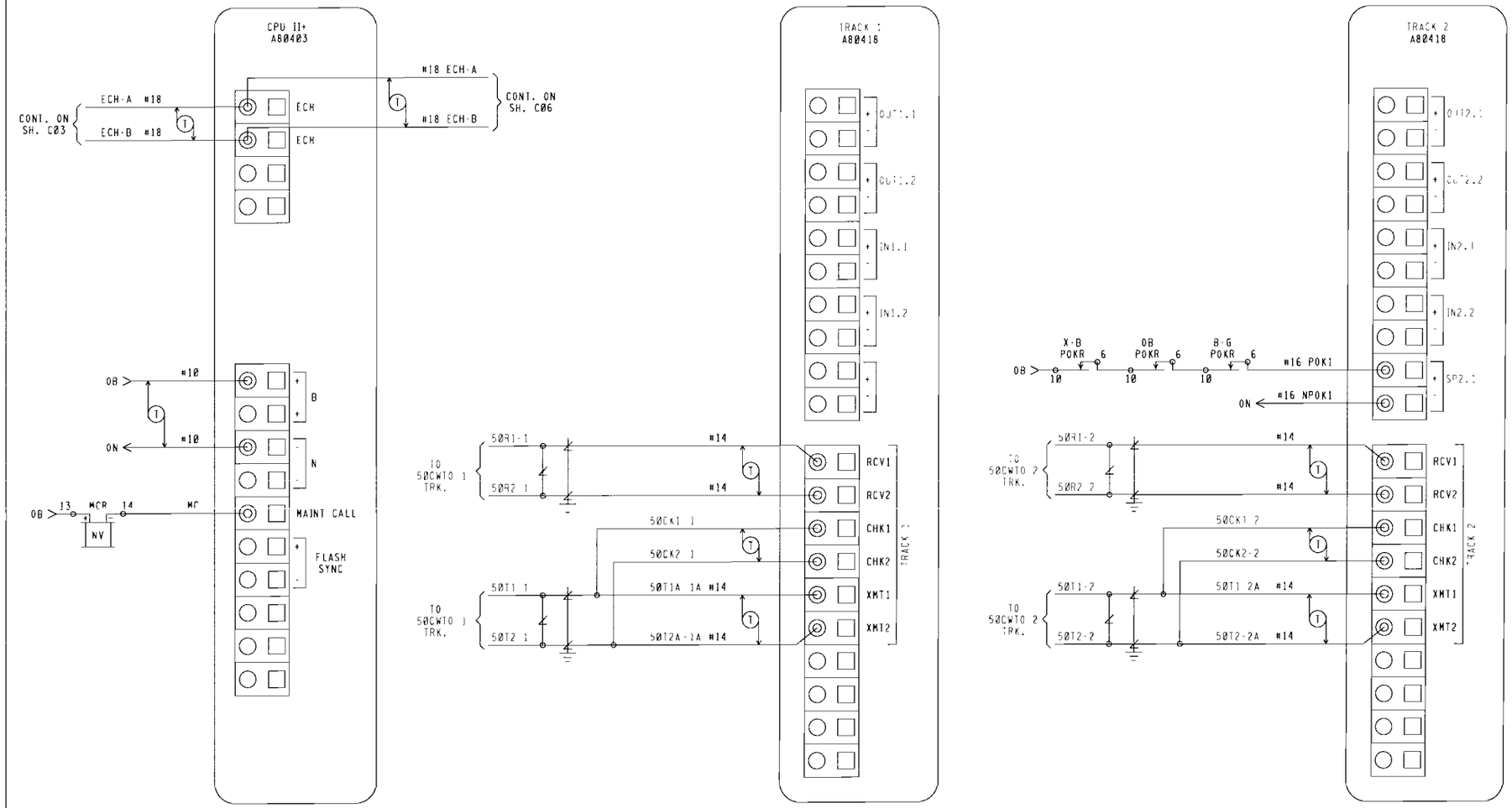

NOTE,

ECHELON CONNECTIONS NOT TO EXCEED 53' IN LENGTH AND TOTAL LENGTH COMBINED NOT TO EXCEED 430' WITH A MAXIMUM OF 8 NODES. RECOMMEND USE BELDEN WIRE CABLE #8461 OR EQUIVALENT.

NEW WORK

SAFETRAN systems

PROJECT #, JL2006015
PROJECT #, JL2007015
DES/CHKD BY, DCK/SWS
DATE, 08 15 07

4K TERMINALS.DGN
REV. 12 22 06

CSX TRANSPORTATION

RAIL TRANSPORT GROUP ENGINEERING
COMMUNICATIONS AND SIGNALS

CP GALE TO WILLOWS

CALLAHAN (546413E)

DETECTION CIRCUITRY CWE-50

JEWETT, IL M.P. QS-127.50

DESIGNED	DIGITIZED	CHECKED	DATE
SAF/DCK	SAF/DCK	SAF/SWS	08-15-07

DESIGN DATE	REV. NO.	DRAWING	SHEET NO	FILE	SHEET
08-15-07	1	8406-1275	6	QS12750	C02

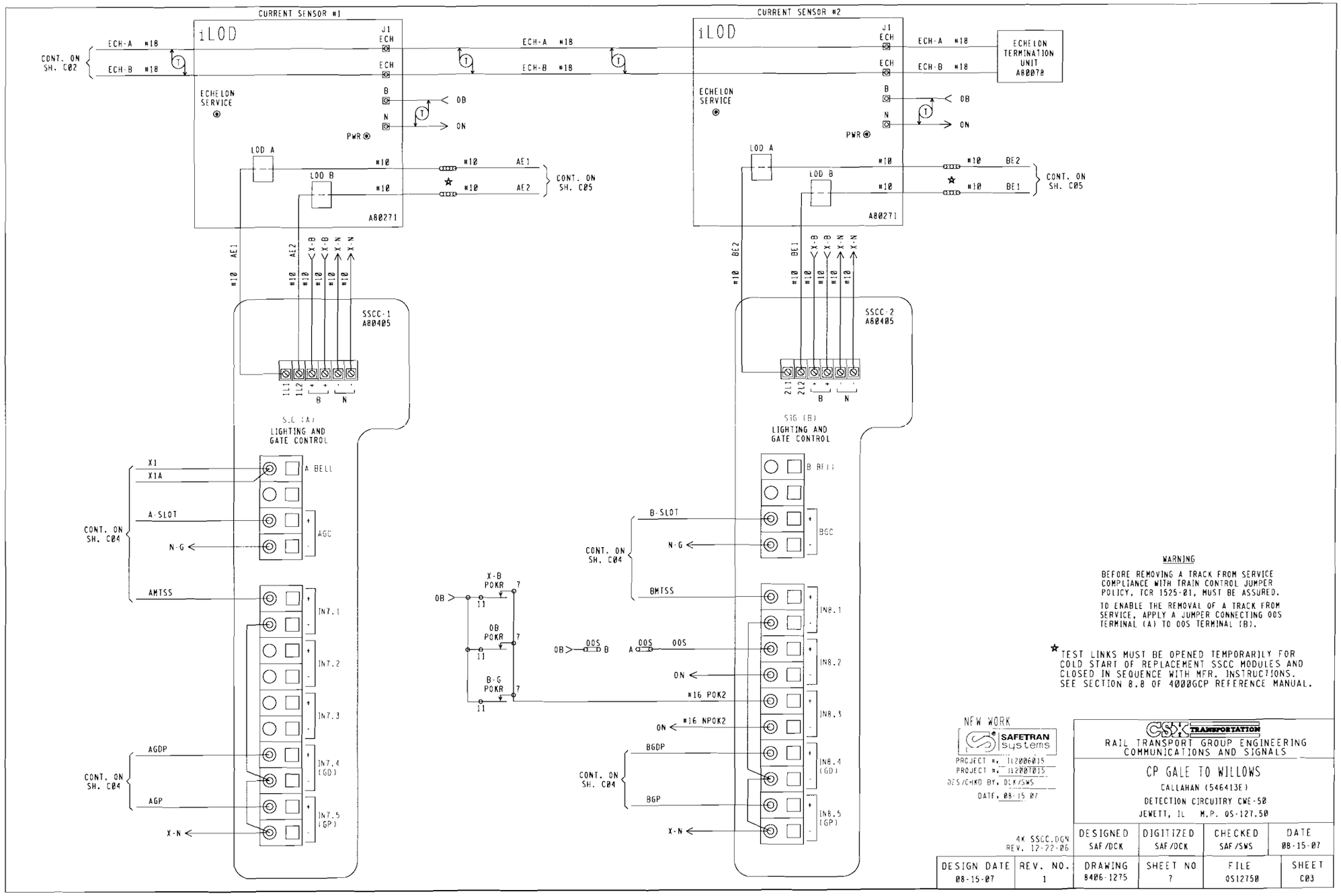

WARNING

BEFORE REMOVING A TRACK FROM SERVICE COMPLIANCE WITH TRAIN CONTROL JUMPER POLICY, TCR 1525-01, MUST BE ASSURED.

TO ENABLE THE REMOVAL OF A TRACK FROM SERVICE, APPLY A JUMPER CONNECTING OOS TERMINAL (A) TO OOS TERMINAL (B).

☆ TEST LINKS MUST BE OPENED TEMPORARILY FOR COLD START OF REPLACEMENT SSCC MODULES AND CLOSED IN SEQUENCE WITH MFR. INSTRUCTIONS. SEE SECTION 8.8 OF 4000GCP REFERENCE MANUAL.

NEW WORK

SAFETRAN systems

PROJECT #: 112006015
PROJECT #: 112007015
DES/CHKD BY: DCK/SWS
DATE: 08-15-07

4K SSCC.DGN
REV. 12-22-06

CSX TRANSPORTATION

RAIL TRANSPORT GROUP ENGINEERING
COMMUNICATIONS AND SIGNALS

CP GALE TO WILLOWS

CALLAHAN (546413E)

DETECTION CIRCUITRY CWE-50

JEWETT, IL M.P. OS-127.50

DESIGN DATE	REV. NO.	DRAWING	SHEET NO	FILE	SHEET
08-15-07	1	8406-1275	7	OS12750	C03

DESIGNED	DIGITIZED	CHECKED	DATE
SAF/DCK	SAF/DCK	SAF/SWS	08-15-07

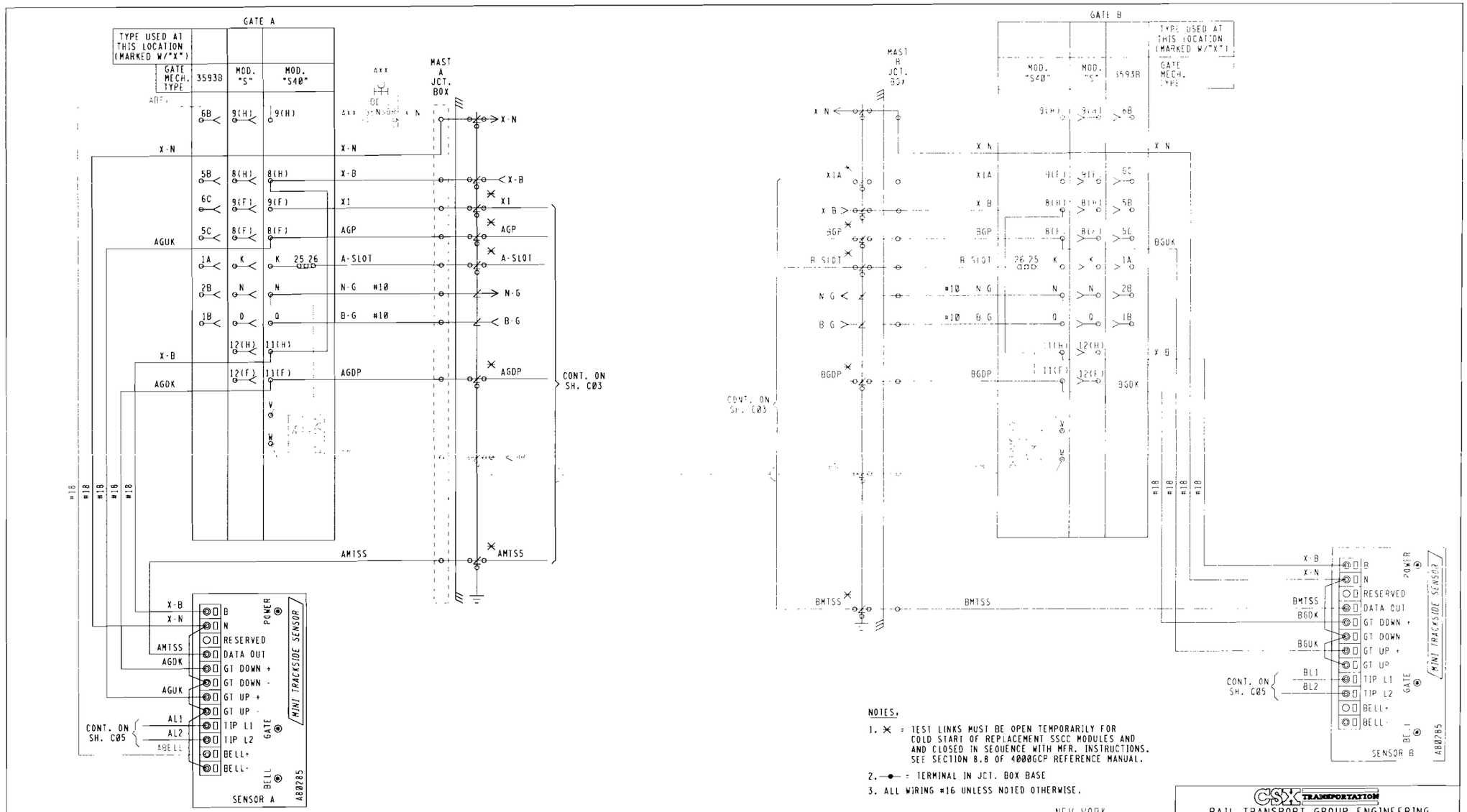

NOTES.

1. ✕ = TEST LINKS MUST BE OPEN TEMPORARILY FOR COLD START OF REPLACEMENT SSCC MODULES AND AND CLOSED IN SEQUENCE WITH MFR. INSTRUCTIONS. SEE SECTION 8.8 OF 4000GCP REFERENCE MANUAL.
2. —●— = TERMINAL IN JCT. BOX BASE
3. ALL WIRING #16 UNLESS NOTED OTHERWISE.

NEW WORK

SAFETRAN systems

PROJECT #, TL2006015
PROJECT #, TL2007015
DES/CHKD BY, DCK/SWS
DATE, 08 15-07

4K GMFCHS.DGN
REV. 12 22 06

CSX TRANSPORTATION

RAIL TRANSPORT GROUP ENGINEERING
COMMUNICATIONS AND SIGNALS

CP GALE TO WILLOWS

CALLAHAN (546413E)

CROSSING WARNING DEVICE GATE CIRCUITRY

JEWETT, IL M.P. OS-127.50

DESIGNED	DIGITIZED	CHECKED	DATE
SAF/DCK	SAF/DCK	SAF/SWS	08-15-07

DESIGN DATE	REV. NO.	DRAWING	SHEET NO	FILE	SHEET
08-15-07	1	8406-1275	8	OS12750	C04

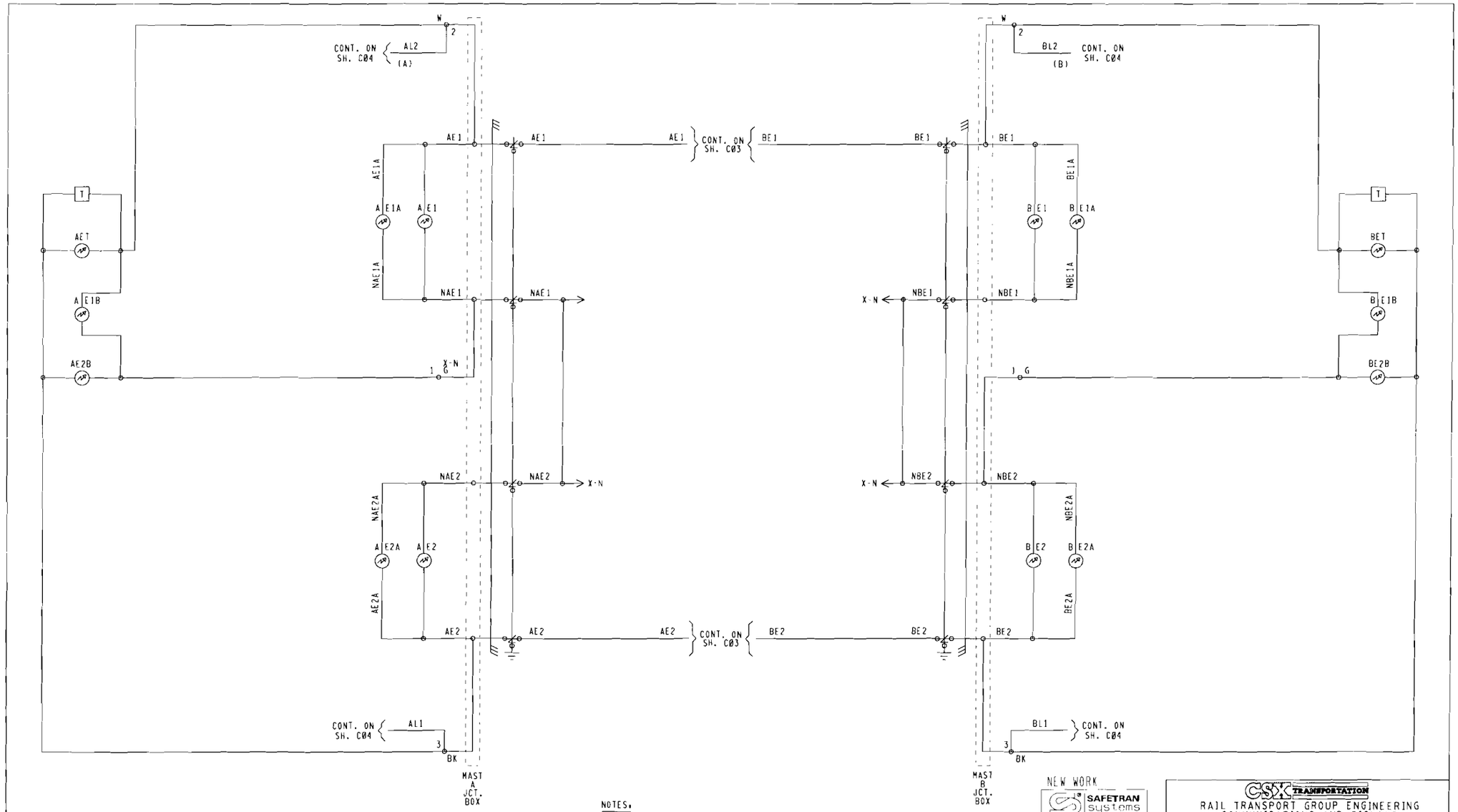

NOTES.

1. ● = TERMINAL IN JUNCTION BOX
2. WHEN 7 OR MORE LIGHTS ON A SINGLE STRUCTURE REFER TO SS382 FOR REQUIRED ARRESTERING
3. FEEDS TO ALL BUSSES AND LIGHT CIRCUITS ARE #10 FLEX
4. UNLESS NOTED ALL OTHER WIRING #16
5. CABLING SPECIFICATIONS SHOWN ON SH. S01
6. [T] = TIP SENSOR

NEW WORK

SAFETRAN systems

PROJECT #. IL2006015
PROJECT #. IL2007015
DES/CHKD BY. DCK/SWS
DATE. 08-15-07

4K-LAMP WIRING.DGN
REV. 08-28-06

CSX TRANSPORTATION
RAIL TRANSPORT GROUP ENGINEERING
COMMUNICATIONS AND SIGNALS

CP GALE TO WILLOWS
CALLAHAN (546413E)
CROSSING WARNING DEVICE LIGHT CIRCUITRY
JEWETT, IL M.P. OS-127.50

DESIGNED	DIGITIZED	CHECKED	DATE
SAF/DCK	SAF/DCK	SAF/SWS	08-15-07

DESIGN DATE	REV. NO.	DRAWING	SHEET NO	FILE	SHEET
08-15-07	1	8406-1275	9	OS12750	C05

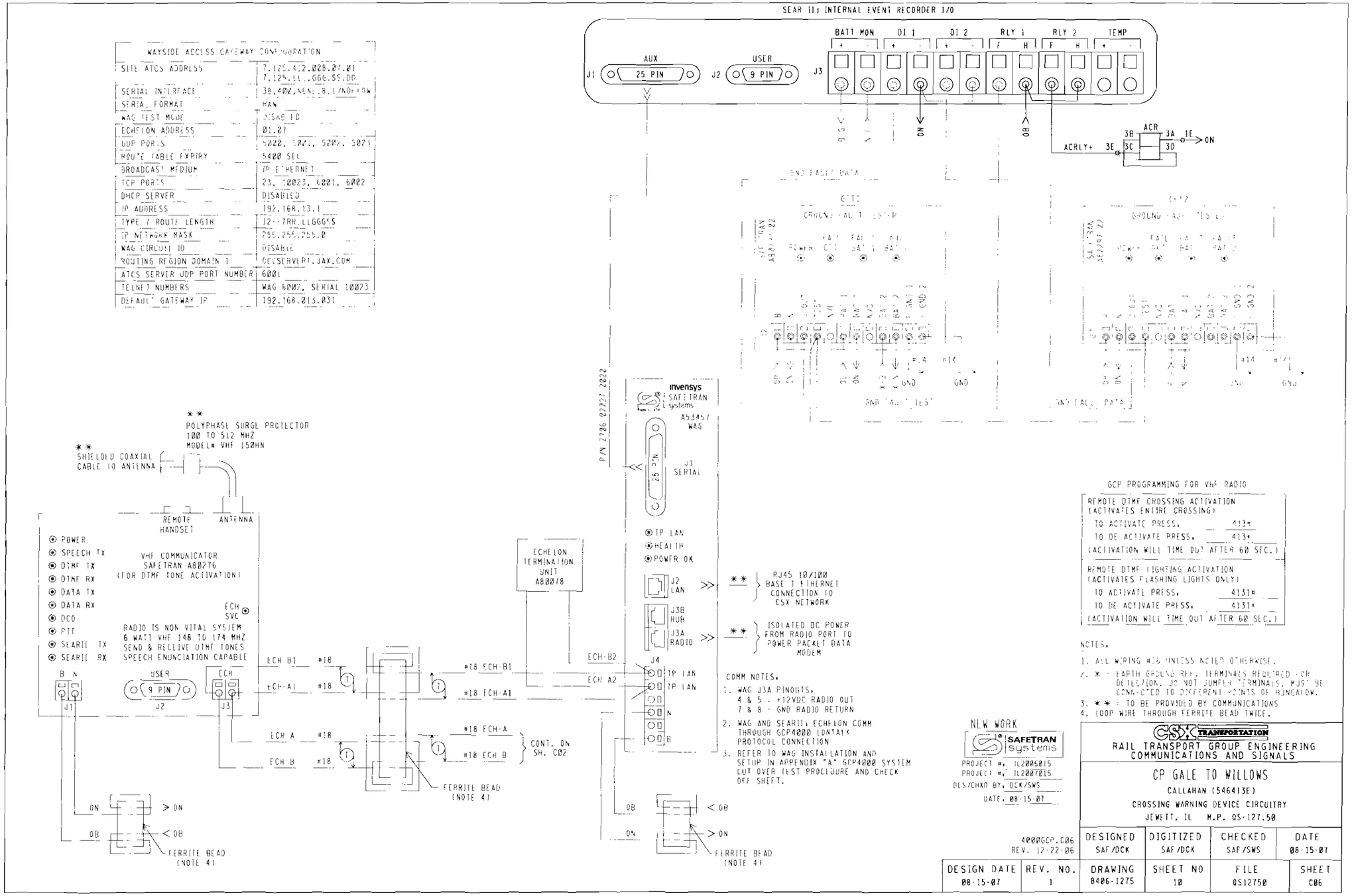

WAYSIDE ACCESS GATEWAY CONFIGURATION	
SITE ATCS ADDRESS	7.125.412.008.07.01 7.125.LL..GGG.SS.DD
SERIAL INTERFACE	38,400,NONE,8,1/NOFLOW
SERIAL FORMAT	RAW
WAG TEST MODE	DISABLED
ECHELON ADDRESS	01.07
UDP PORTS	5000, 5001, 5002, 5003
ROUTE TABLE EXPIRY	5400 SEC
BROADCAST MEDIUM	IP ETHERNET
TCP PORTS	23, 10023, 6001, 6002
DHCP SERVER	DISABLED
IP ADDRESS	192.168.13.1
TYPE / ROUTE LENGTH	12--7RR.LLGGGSS
IP NETWORK MASK	255.255.255.0
WAG CIRCUIT ID	DISABLE
ROUTING REGION DOMAIN 1	DCCSERVER1.JAX.COM
ATCS SERVER UDP PORT NUMBER	6001
TELNET NUMBERS	WAG 6002, SERIAL 10023
DEFAULT GATEWAY IP	192.168.013.031

COMM NOTES.

1. WAG J3A PINOUTS,
   4 & 5 - +12VDC RADIO OUT
   7 & 8 - GND RADIO RETURN
2. WAG AND SEARII, ECHELON COMM THROUGH GCP4000 LONTALK PROTOCOL CONNECTION
3. REFER TO WAG INSTALLATION AND SETUP IN APPENDIX "A" GCP4000 SYSTEM CUT OVER TEST PROCEDURE AND CHECK OFF SHEET.

GCP PROGRAMMING FOR VHF RADIO

REMOTE DTMF CROSSING ACTIVATION
(ACTIVATES ENTIRE CROSSING)
TO ACTIVATE PRESS, 413#
TO DE ACTIVATE PRESS, 413*
(ACTIVATION WILL TIME OUT AFTER 60 SEC.)

REMOTE DTMF LIGHTING ACTIVATION
(ACTIVATES FLASHING LIGHTS ONLY)
TO ACTIVATE PRESS, 4131#
TO DE ACTIVATE PRESS, 4131*
(ACTIVATION WILL TIME OUT AFTER 60 SEC.)

NOTES.

1. ALL WIRING #16 UNLESS NOTED OTHERWISE.
2. * - EARTH GROUND REF. TERMINALS REQUIRED FOR DETECTION. DO NOT JUMPER TERMINALS. MUST BE CONNECTED TO DIFFERENT POINTS OF BUNGALOW.
3. ** - TO BE PROVIDED BY COMMUNICATIONS
4. LOOP WIRE THROUGH FERRITE BEAD TWICE.

	DEFAULTS AND/OR STYLE	FIELD RECORD
SEAR II: EXECUTIVE PROGRAM	VERSION, 9V725A01	VERSION, ____
APPLICATION PROGRAM (IF LOADED)	VERSION, 9V864A01	VERSION, ____

NOTE TO INSPECTOR, AT IN SERVICE OF SEAR II: OR UPDATE OF ITS INTERNAL EXECUTIVE PROGRAM OR ITS CS4T APPLICATION PROGRAM, THE VERSION NUMBER OF EACH PROGRAM MUST BE INSERTED IN THE BLANK FIELDS.

SITE SET UP PROCEDURE	
FUNCTION	LED DISPLAY
DATE/TIME	XX XX XXXX XX,XX,XX
AUTOMACTIC DST ADJUSTMENT	YES
TIME ZONE	EASTERN
SITE NAME	CALLAHAN
MILEPOST	OS 127.50
DOT NUMBER	546413E
TESTER TYPE	CROSSING
DATE FORMAT	MM-DD-YYYY
TEMP FORMAT	FAHRENHEIT
INDICATE HOLD (SEC)	0
SITE TYPE	COLLECTOR
SITE ATCS ADDRESS	7.125.412.028.99.01 (7.RRR.LLL.GGG.99.01)
POLL ID	1
OFFICE ADDRESS	2.125.00.0000 (2.RRR.NN.DDDD)
FIELD COMM. DEVICE	VHF COMM. (ECHELON)
MODE	GEN/ATCS
WAMS AID	ENABLED
OFFICE COMM. DEVICE	WAG (ECHELON)
USER PORT BAUD	9600
USER PORT DATA BITS	8
USER PORT PARITY	NONE
USER PORT STOP BITS	1
USER PORT FLOW CONTROL	NONE
AUX PORT BAUD	38,400
AUX PORT DATA BITS	8
AUX PORT PARITY	NONE
AUX PORT STOP BITS	1
AUX PORT FLOW CONTROL	NONE
COMM PORT BAUD	9600
COMM PORT DATA BITS	8
COMM PORT PARITY	NONE
COMM PORT STOP BITS	1
COMM PORT FLOW CONTROL	NONE

INSPECTOR NOTE,
CURRENT VALUES MAY VARY DEPENDANT ON FIELD CONDITIONS, MARK UP PER ACTUAL READINGS FOR IN-SERVICE REVISION.

LIT BULB COUNT ON EACH CIRCUIT	NO.	TYPE OF BULB	CURRENT READING IN AMP. AT APPROX. 10.0 V ARRAY VOLTAGE
CURRENT SENSOR (1) AE1, LAMP SET UP	4	☐BULBS ☐LED	4.0
CURRENT SENSOR (1) AE2, LAMP SET UP	4	☐BULBS ☐LED	4.0
CURRENT SENSOR (2) BE1, LAMP SET UP	4	☐BULBS ☐LED	4.0
CURRENT SENSOR (2) BE2, LAMP SET UP	4	☐BULBS ☐LED	4.0

VHF RADIO CHANNELS			
1	161.130	5	161.550
2	160.710	6	160.785
3	160.560	7	160.785
4	160.860	8	160.785

NOTE 9

MENU → CONFIGURATION	
MODULE TYPE	WAG
MODULE NAME	DEFAULT
WAG ECHELON NODE	7

MEASURE BATTERY VOLTAGE AT INPUT		
BATTERY VOLTAGE	QB	_____ VOLTS
BATTERY VOLTAGE	A-B	_____ VOLTS
BATTERY VOLTAGE	B-G	_____ VOLTS

NOTE,
REFER TO WAG INSTALLATION AND SETUP IN APPENDIX "A" GCP4000 SYTEM CUT OVER, TEST PROCEDURE AND CHECK OFF SHEET.

	CONTROL SYSTEM CONFIGURATION MENU QUESTIONS	
	OPTION	SELECTION
NOTE 1	RESET NAMES AND MODULES*	YES ☐ NO ☐
	RAILROAD NUMBER	125
	ENTRANCE GATES*	0 ☐ 1 ☐ 2 ☐ 3 ☐ 4 ☐ 5 ☐ 6 ☐ 7 ☐ 8 ☐
NOTE 2	EXIT GATES*	0 ☐ 1 ☐ 2 ☐ 3 ☐ 4 ☐
	GATE POSITION FAIL*	20 SECS.
	BATTERY BANKS*	1 ☐ 2 ☐ 3 ☐
	BATT MON USED*	NO ☐ YES ☐
	INTERNAL CROSSING CONTROLLERS*	0 ☐ 1 ☐ 2 ☐
	EXTERNAL CROSSING CONTROLLERS*	0 ☐ 1 ☐ 2 ☐
NOTE 3	VHF COMMUNICATOR*	YES ☐ NO ☐
	ACTIVATION CODE	413
	ACTIVATION TIMEOUT	(60 SEC)
	iLOD MODULES*	0 ☐ 1 ☐ 2 ☐ 3 ☐ 4 ☐
NOTE 4	ANY LED BULBS USED*	NO ☐ YES ☐
	AUTO INSPECTIONS*	YES ☐ NO ☐
NOTE 5	BELL SENSOR*	0 ☐ 1 ☐ 2 ☐ 3 ☐ 4 ☐
	BELL SENSOR TSS 1*	NO ☐ YES ☐
	BELL SENSOR TSS 2*	NO ☐ YES ☐
	BELL SENSOR TSS 3*	NO ☐ YES ☐
	BELL SENSOR TSS 4*	NO ☐ YES ☐
	BELL SENSOR TSS 5*	NO ☐ YES ☐
	BELL SENSOR TSS 6*	NO ☐ YES ☐
	BELL SENSOR TSS 7*	NO ☐ YES ☐
	BELL SENSOR TSS 8*	NO ☐ YES ☐
	BELL ON*	GATES LOWERING ☐ GATES MOVING ☐ ALWAYS ☐
	GFI'S	YES ☐ NO ☐
	BATTERIES ON GFI1	1 ☐ 2 ☐
NOTE 6	GATE TIP SENSORS*	YES ☐ NO ☐
	RTU	NO ☐ YES ☐
NOTE 7	VHF VOICE CHANNEL	1 ☐ 2 ☐ 3 ☐ 4 ☐ 5 ☐ 6 ☐ 7 ☐ 8 ☐
	DATA CHANNEL	1 ☐ 2 ☐ 3 ☐ 4 ☐ 5 ☐ 6 ☐ 7 ☐ 8 ☐
	FULL APPROACH MOVE ALARMS*	ACTIVATED ☐ DO NOT ACTIVATE ☐

NOTE 8

EDIT DIGITAL INPUTS	☐ NO	☐ YES
EDIT BATTERIES	☐ NO	☐ YES
EDIT RELAYS	☐ NO	☐ YES
EDIT INDICATOR LEDS	☐ NO	☐ YES
EDIT TEST LED'S	☐ NO	☐ YES
EDIT iLOD SENSOR	☐ NO	☐ YES
EDIT VHF SETTINGS	☐ NO	☐ YES

NOTES,

1. SELECT YES ON INITIAL SET-UP.
2. OPTION AVAILABLE IF GATES = YES
3. OPTION AVAILABLE IF VHF COMMUNICATOR = YES LAST 3 DIGITS OF DOT NUMBER.
4. OPTION AVAILABLE IF iLODS.
5. OPTION AVAILABLE IF BELL SENSORS.
6. OPTION AVAILABLE IF GATES.
7. OPTION AVAILABLE IF VHF RADIO.
8. ONLY YES IN SPECIAL CIRCUMSTANCES.
9. SELECT "MENU" THEN "CONFIGURATION" FROM SEAR II INTERFACE KEYPAD TO ACCESS MODULE CONFIGURATION MENU.

NEW WORK

SAFETRAN systems

PROJECT #, 12006015
PROJECT #, 12007015
DES/CHKD BY, DCK/SWS
DATE, 08-15-07

( ) = NOTE

4000CCP.C07
REV. 10-26-06

CSX TRANSPORTATION
RAIL TRANSPORT GROUP ENGINEERING
COMMUNICATIONS AND SIGNALS

CP GALE TO WILLOWS
CALLAHAN (546413E)
SEAR II: CONFIGURATION & FUNCTIONS
JEWETT, IL M.P. OS-127.50

DESIGNED	DIGITIZED	CHECKED	DATE
SAF/DCK	SAF/DCK	SAF/SWS	08-15-07

DESIGN DATE	REV. NO.	DRAWING	SHEET NO	FILE	SHEET
08-15-07	1	8406-1275	11	OS12750	C07

2824 APPROACH AT 60 M.P.H.= 25.0 SECONDS (MINIMUM)

2824 APPROACH AT 60 M.P.H.= 25.0 SECONDS (MINIMUM)

WEST TO WILLOWS

EAST TO CP GALE

RECEIVED
JAN 28 2008
Illinois Commerce Commission
RAIL SAFETY SECTION

GPS COORDINATES:
39° 11' 16" N
88° 19' 19" W
ELEV. 393'

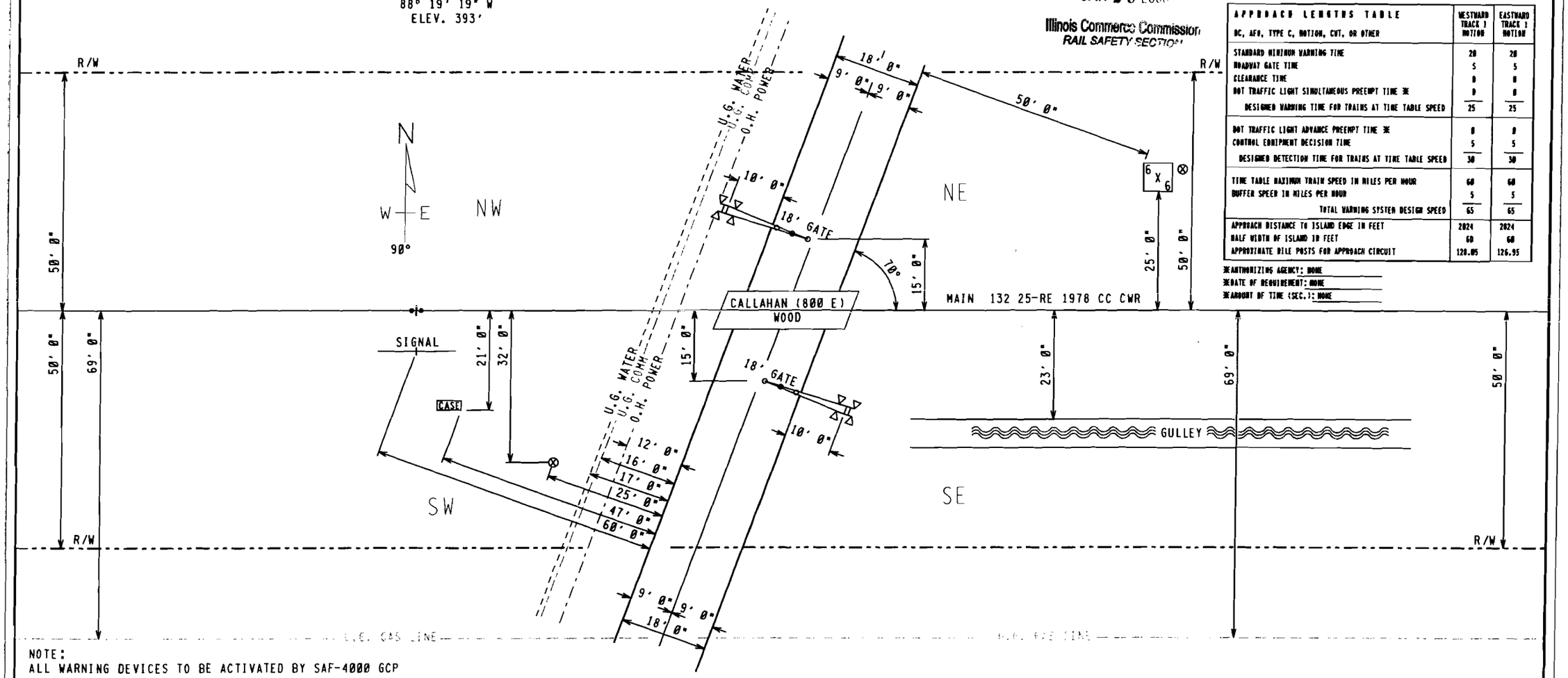

APPROACH LENGTHS TABLE BC, AFO, TYPE C, MOTION, CWT, OR OTHER	WESTWARD TRACK 1 MOTION	EASTWARD TRACK 1 MOTION
STANDARD MINIMUM WARNING TIME	20	20
ROADWAY GATE TIME	5	5
CLEARANCE TIME	0	0
DOT TRAFFIC LIGHT SIMULTANEOUS PREEMPT TIME *	0	0
DESIGNED WARNING TIME FOR TRAINS AT TIME TABLE SPEED	25	25
DOT TRAFFIC LIGHT ADVANCE PREEMPT TIME *	0	0
CONTROL EQUIPMENT DECISION TIME	5	5
DESIGNED DETECTION TIME FOR TRAINS AT TIME TABLE SPEED	30	30
TIME TABLE MAXIMUM TRAIN SPEED IN MILES PER HOUR	60	60
BUFFER SPEED IN MILES PER HOUR	5	5
TOTAL WARNING SYSTEM DESIGN SPEED	65	65
APPROACH DISTANCE TO ISLAND EDGE IN FEET	2824	2824
HALF WIDTH OF ISLAND IN FEET	60	60
APPROXIMATE MILE POSTS FOR APPROACH CIRCUIT	120.05	126.95

*AUTHORIZING AGENCY: NONE
*DATE OF REQUIREMENT: NONE
*AMOUNT OF TIME (SEC.): NONE

NOTE:
ALL WARNING DEVICES TO BE ACTIVATED BY SAF-4000 GCP

FILE NAME: QS12750.H01	REVISION DATES	PRODUCED FOR:	PRODUCED BY:	LEGEND	GUARD RAIL	METER SERVICE ⊗	STREET NAME: CALLAHAN (800E)
DATE DRAWN: 04-18-2007	- -	CSX TRANSPORTATION	SAFETRAN systems	CSX ROW	O.H. POWER	POLE Ⓟ	CITY & STATE: JEWETT, IL
DRAWN BY: GARY CARLEE	- -	RAIL TRANSPORT GROUP ENGINEERING	7775 BAYMEADOWS WAY	R/R POLELINE	FENCE	FIRE PLUG Ⓕ	PROJECT #: IL2007015
CHECKED BY: GREG BURLEY	- -	COMMUNICATIONS AND SIGNALS	SUITE 250	GAS	WATER	SEWER CAP Ⓢ	OP #: TBA
SSC #: JXXD00079	- -		JACKSONVILLE, FL 32256	FIBER OPTIC	SEWER	GAS VENT Ⓥ	DOT: 546413E

PROPOSED CROSSING LAYOUT
SCALE = 20:1

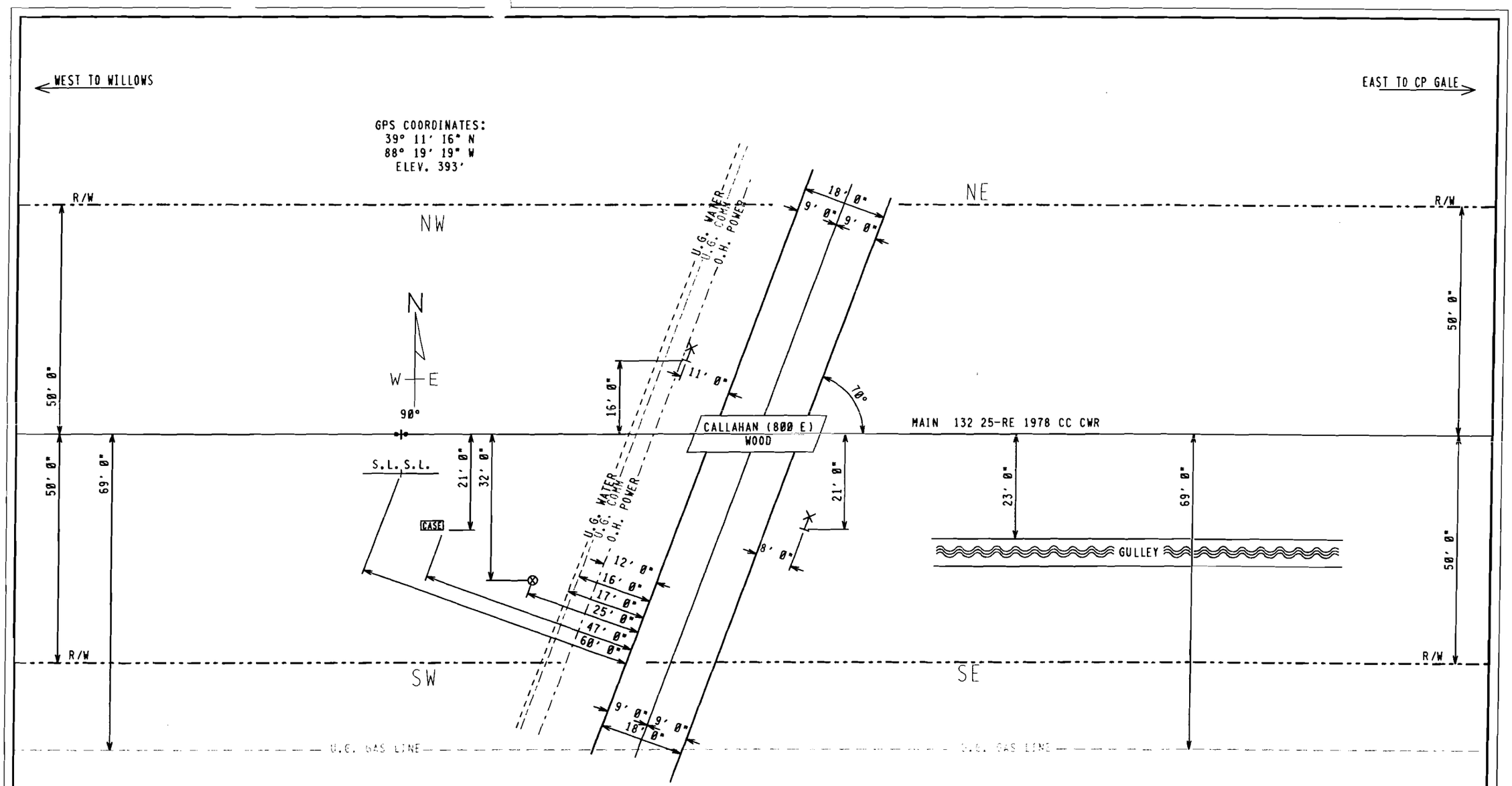

FILE NAME: QS12750.H02	REVISION DATES	PRODUCED FOR:	PRODUCED BY:	LEGEND	GUARD RAIL	METER SERVICE	STREET NAME: CALLAHAN (800E)
DATE DRAWN: 04-18-2007	- -	CSX TRANSPORTATION	SAFETRAN systems	CSX ROW	O.H. POWER	POLE	CITY & STATE: JEWETT, IL
DRAWN BY: GARY CARLEE	- -	RAIL TRANSPORT GROUP ENGINEERING	7775 BAYMEADOWS WAY	R/R POLELINE	FENCE	FIRE PLUG	PROJECT #: IL2007015
CHECKED BY: GREG BURLEY	- -	COMMUNICATIONS AND SIGNALS	SUITE 250	GAS	WATER	SEWER CAP	OP #: TBA
SSC #: JXXD00079	- -		JACKSONVILLE, FL 32256	FIBER OPTIC	SEWER	GAS VENT	DOT: 546413E

EXISTING CROSSING LAYOUT

SCALE = 20:1

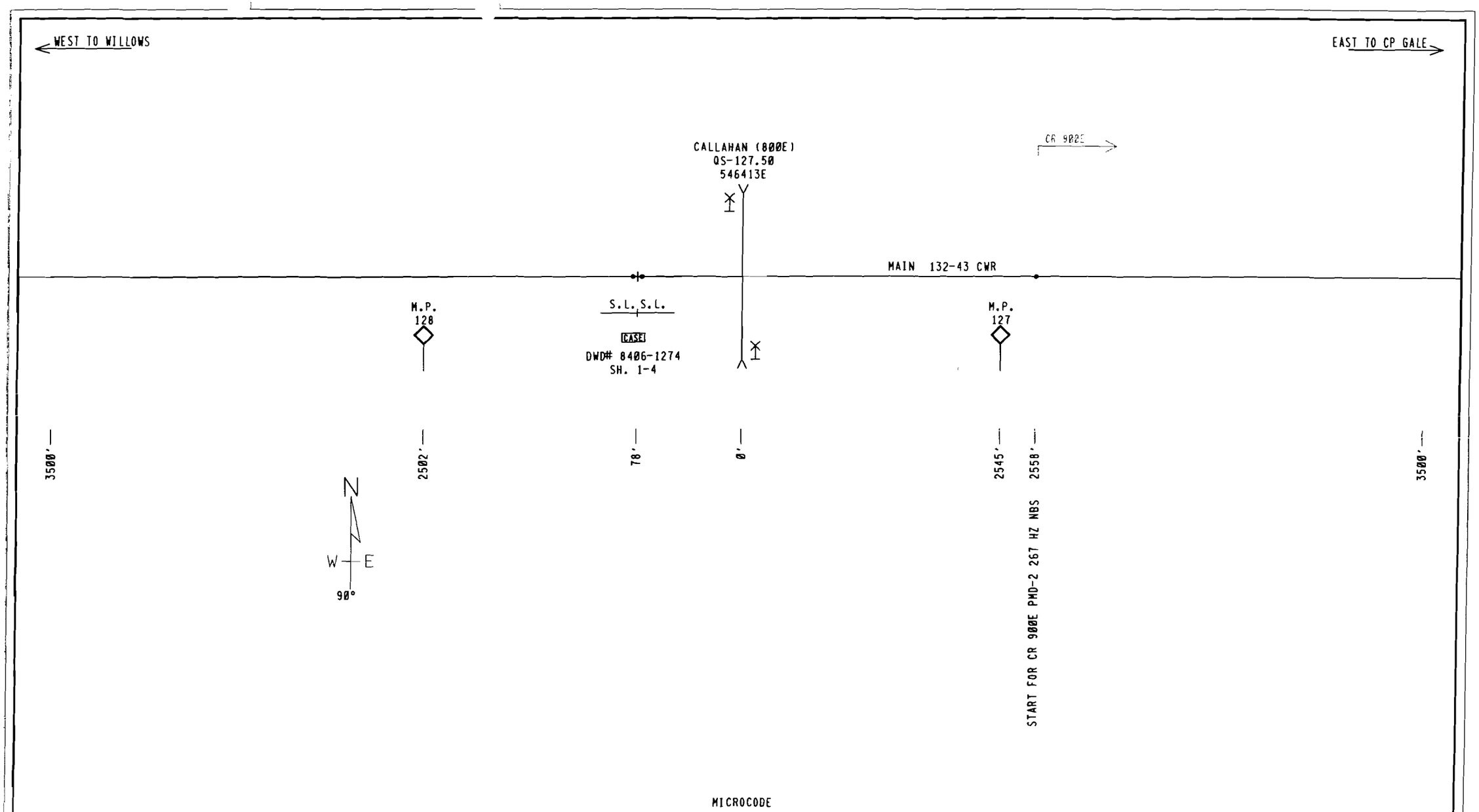

FILE NAME: QS12750.H03	REVISION DATES	PRODUCED FOR:	PRODUCED BY:	LEGEND	GUARD RAIL	METER SERVICE ⊗	STREET NAME: CALLAHAN (800E)
DATE DRAWN: 04-18-2007	- -	CSX TRANSPORTATION	SAFETRAN *systems*	CSX ROW	O.H. POWER	POLE Ⓟ	CITY & STATE: JEWETT, IL
DRAWN BY: GARY CARLEE	- -	RAIL TRANSPORT GROUP ENGINEERING	7775 BAYMEADOWS WAY	R/R POLELINE	FENCE	FIRE PLUG Ⓕ	PROJECT #: IL2007015
CHECKED BY: GREG BURLEY	- -	COMMUNICATIONS AND SIGNALS	SUITE 250	GAS	WATER	SEWER CAP Ⓢ	OP #: TBA
SSC #: JXXD00079	- -		JACKSONVILLE, FL 32256	FIBER OPTIC	SEWER	GAS VENT Ⓥ	DOT: 546413E

EXISTING TRACK LAYOUT
NOT TO SCALE

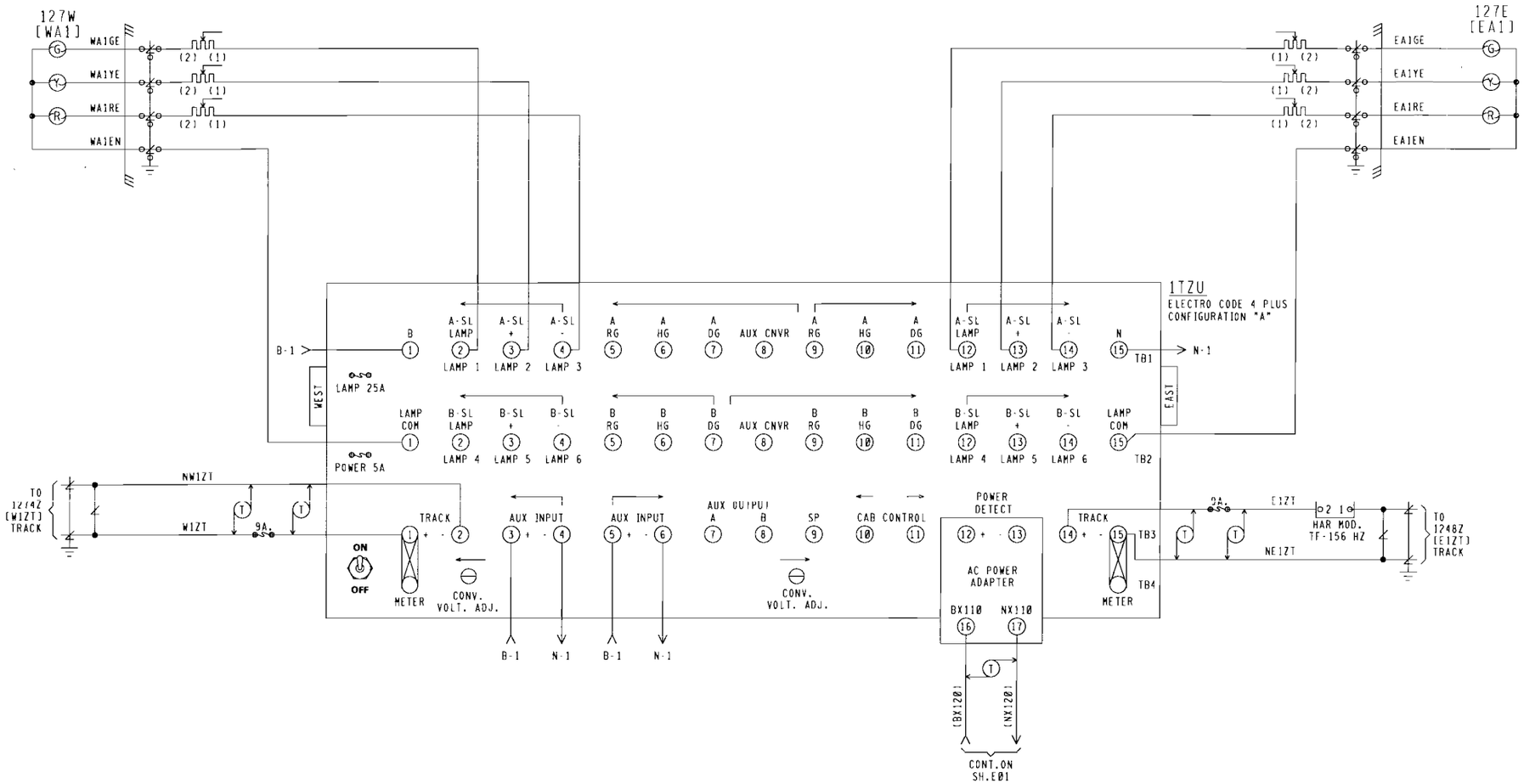

230 MICROPROCESSOR MODULE

JP1	210A/220		210B/230
JP2	210		220/230
JP3	U12-256		U12-64
JP4	220/230		210 (16K)
JP5	220/230		210 (32K)

INSTALL JUMPER TO DETERMINE PROPER CONFIGURATION.

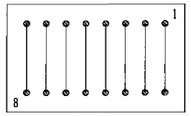

SHUNT 1

CHASSIS
I.D. 38

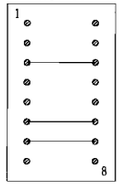

EXE NAME EC40-50 REV. 06
CS U2 $ AE14 CS U4 $ 2F3F
APP NAME CLA0 REV. 3.4
CS U1 & U3 $ BA20

216B MODULE

215A/B/D JP1 215SC

215D MODULE

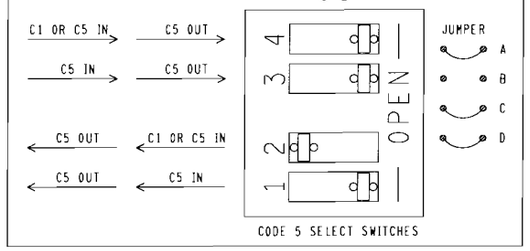

CODE 5 SELECT SWITCHES

NOTES:

1. SIGNAL LIGHT RESISTORS ARE 3 OHM VARIABLE, 15 WATT, AND MOUNTED IN SIGNAL HEADS.
2. [ ] = TAGGING PURPOSES ONLY.
3. AC POWER ADAPTER - HARMON PART #810-083004-018

SAFETRAN systems

PROJECT #: 11206015
PROJECT #: TL2007015
DES/CHKD BY: DCK/SWS
DATE: 08-15-07

CSX TRANSPORTATION

RAIL TRANSPORT GROUP ENGINEERING
COMMUNICATIONS AND SIGNALS

CP GALE TO WILLOWS

INTERMEDIATE SIGNALS 127W & 127E
ELECTRO CODE 4 PLUS CIRCUITS
JEWETT, IL M.P. QS-127.40

11AUT01.C01
REV. 04 10 04

DESIGNED	DIGITIZED	CHECKED	DATE
SAF/DCK	SAF/DCK	SAF/SWS	08-15-07

DESIGN DATE	REV. NO.	DRAWING	SHEET NO	FILE	SHEET
08-15-07	1	8406-1275	12	QS12750	C08

INDEX

CONTENTS

SH. NO.		REVISION NO. 1	2	3	4	5	6	7	8	9
I01	TITLE, NOTES, INDEX, AND REVISIONS									
S01	TRACK AND SIGNAL PLAN									
E01	POWER DISTRIBUTION									
C01	ELECTROCODE REPEATER CIRCUITS									
C02	ELECTROCODE REPEATER CIRCUITS									

= DESIGN COMPLETED

= REVISION COMPLETED

NEW WORK

SAFETRAN systems

PROJECT #, IL2006015
PROJECT #, IL2007015
DES/CHKD BY, DCK/SWS
DATE, 08 15 07

= NOTE

XXX = OUT

REPCUT.I01
REV. 02-17 06

DESIGN DATE	REV. NO.
08-15-07	1

REVISIONS

REV. NO.	PROJECT NO.	DESIGN DATE	IN SERVICE DATE	REVISION DATE
1	IL2006015	08-15-07		
1	IL2007015	08-15-07		

TO BE COMPLETED ON A.I.S.

CSX TRANSPORTATION

RAIL TRANSPORT GROUP ENGINEERING
COMMUNICATIONS AND SIGNALS

CP GALE TO WILLOWS

ELECTROCODE REPEATER

TITLE, NOTES, INDEX, AND REVISIONS

JEWETT, IL M.P. QS-128.80

DESIGNED	DIGITIZED	CHECKED	DATE
SAF/DCK	SAF/DCK	SAF/SWS	08-15-07

DRAWING	SHEET NO	FILE	SHEET
8406-1288	1	QS12880	I01

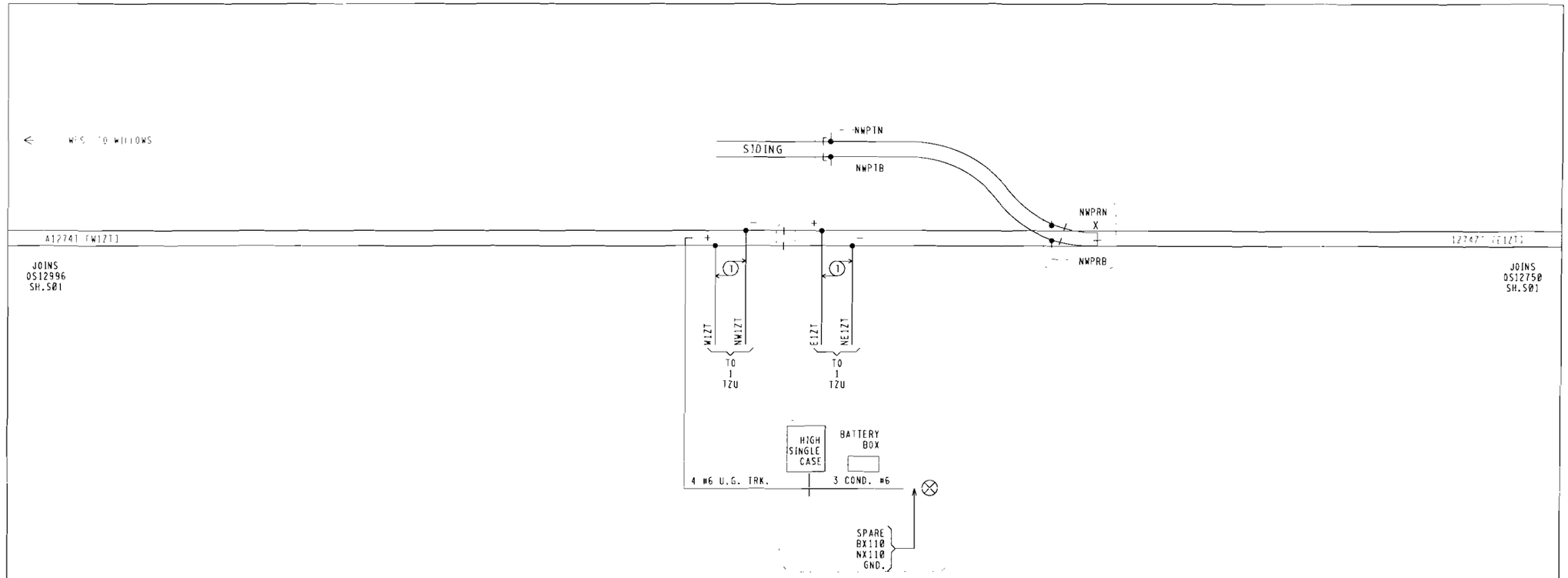

NEW WORK EXCEPT
= EXISTING

SAFETRAN systems

PROJECT #. IL2006015
PROJECT #. IL2007015
DES/CHKD BY. DCK/SWS
DATE. 08 15 07

= NOTE
= OUT

REPCUT.S01
REV. 02 17-06

CSX TRANSPORTATION
RAIL TRANSPORT GROUP ENGINEERING
COMMUNICATIONS AND SIGNALS

CP GALE TO WILLOWS
ELECTROCODE REPEATER
TRACK AND SIGNAL PLAN
JEWETT, IL M.P. OS-128.80

DESIGNED	DIGITIZED	CHECKED	DATE
SAF/DCK	SAF/DCK	SAF/SWS	08-15-07

DESIGN DATE	REV. NO.	DRAWING	SHEET NO	FILE	SHEET
08-15-07	1	6406-1288	2 (A)	OS12880	S01 (A)

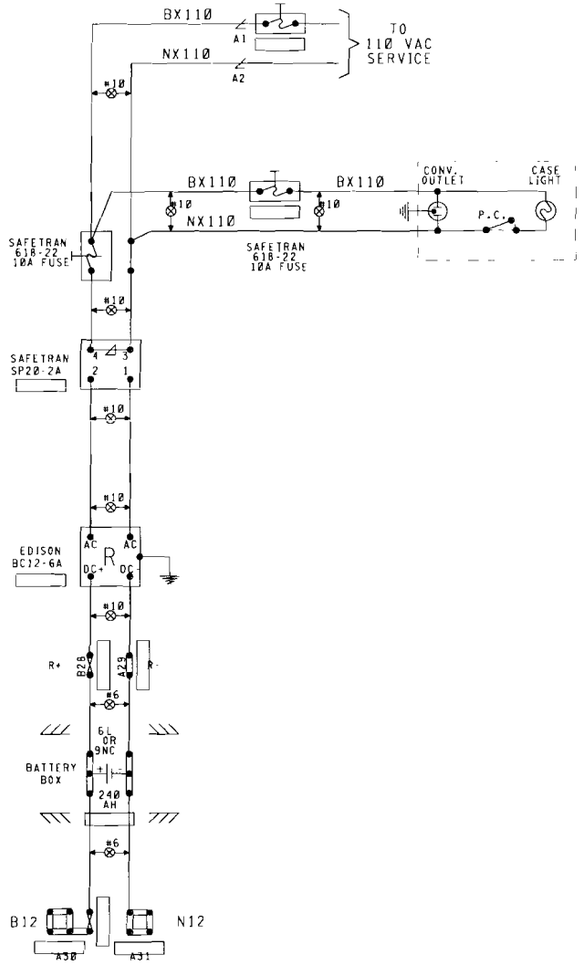

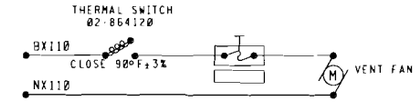

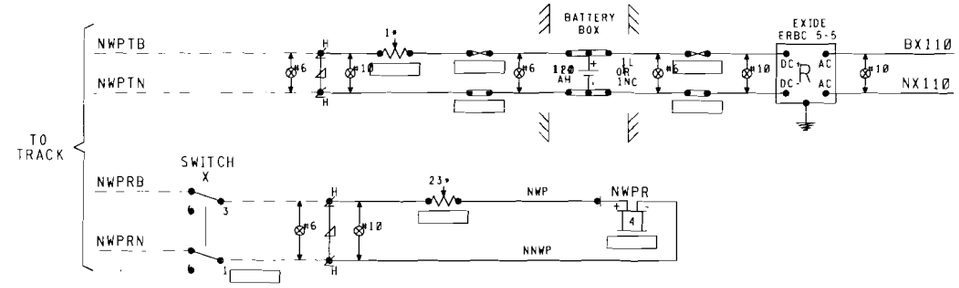

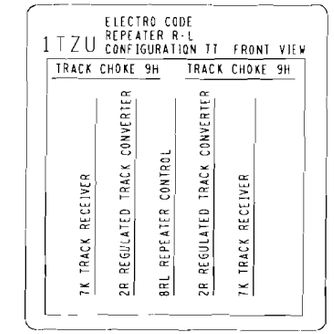

NEW SHEET

SAFETRAN systems

PROJECT #: IL2006015
PROJECT #: IL2007015
DES/CHKD BY: DCK/SWS
DATE: 08 15-07

⊖⊖⊖ = IN
✕✕✕ = OUT

REPCUT.F01
REV. 03 31-06

CSX TRANSPORTATION

RAIL TRANSPORT GROUP ENGINEERING
COMMUNICATIONS AND SIGNALS

CP GALE TO WILLOWS

ELECTROCODE REPEATER

POWER DISTRIBUTION

JEWETT, IL M.P. QS-128.80

DESIGNED	DIGITIZED	CHECKED	DATE
SAF/DCK	SAF/DCK	SAF/SWS	08-15-07

DESIGN DATE	REV. NO.	DRAWING	SHEET NO	FILE	SHEET
08-15-07	1	8406-1288	3 (A)	QS12880	E01 (A)

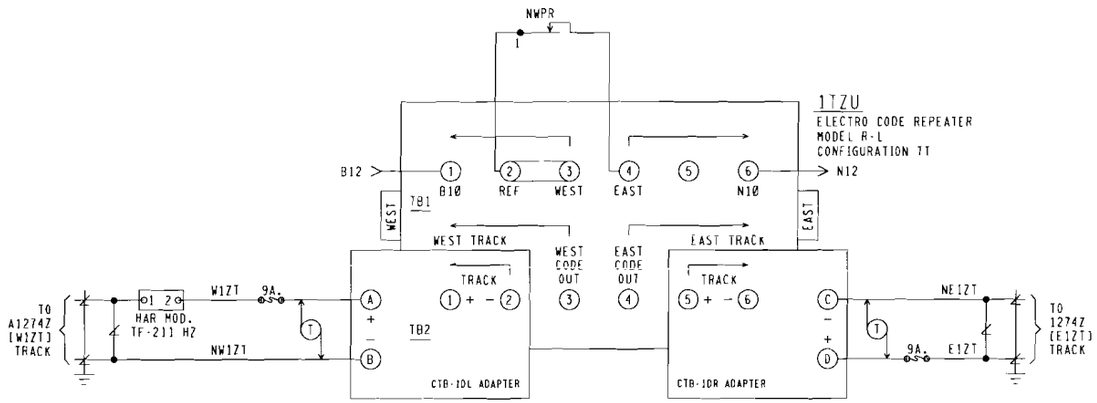

NOTES.

1. EAST & WEST TAGGING IS PHYSICALLY ON THE UNIT AND MAY NOT REPRESENT ACTUAL DIRECTION.
2. [ ] = TAGGING PURPOSES ONLY

NEW WORK

SAFETRAN systems

PROJECT #. IL2006015
PROJECT #. IL2007215
DES/CHKD BY. DCK/SWS
DATE. 08 15-07

XXX = OUT

CSX TRANSPORTATION

RAIL TRANSPORT GROUP ENGINEERING
COMMUNICATIONS AND SIGNALS

CP GALE TO WILLOWS

ELECTROCODE REPEATER

ELECTRO CODE REPEATER CIRCUITS

JEWETT, IL M.P. OS-128.80

REPCUT.C01
REV. 04 32-04

DESIGNED	DIGITIZED	CHECKED	DATE
SAF/DCK	SAF/DCK	SAF/SWS	08-15-07

DESIGN DATE	REV. NO.	DRAWING	SHEET NO	FILE	SHEET
08-15-07	1	8406-1288	4	OS12880	C01 (A)

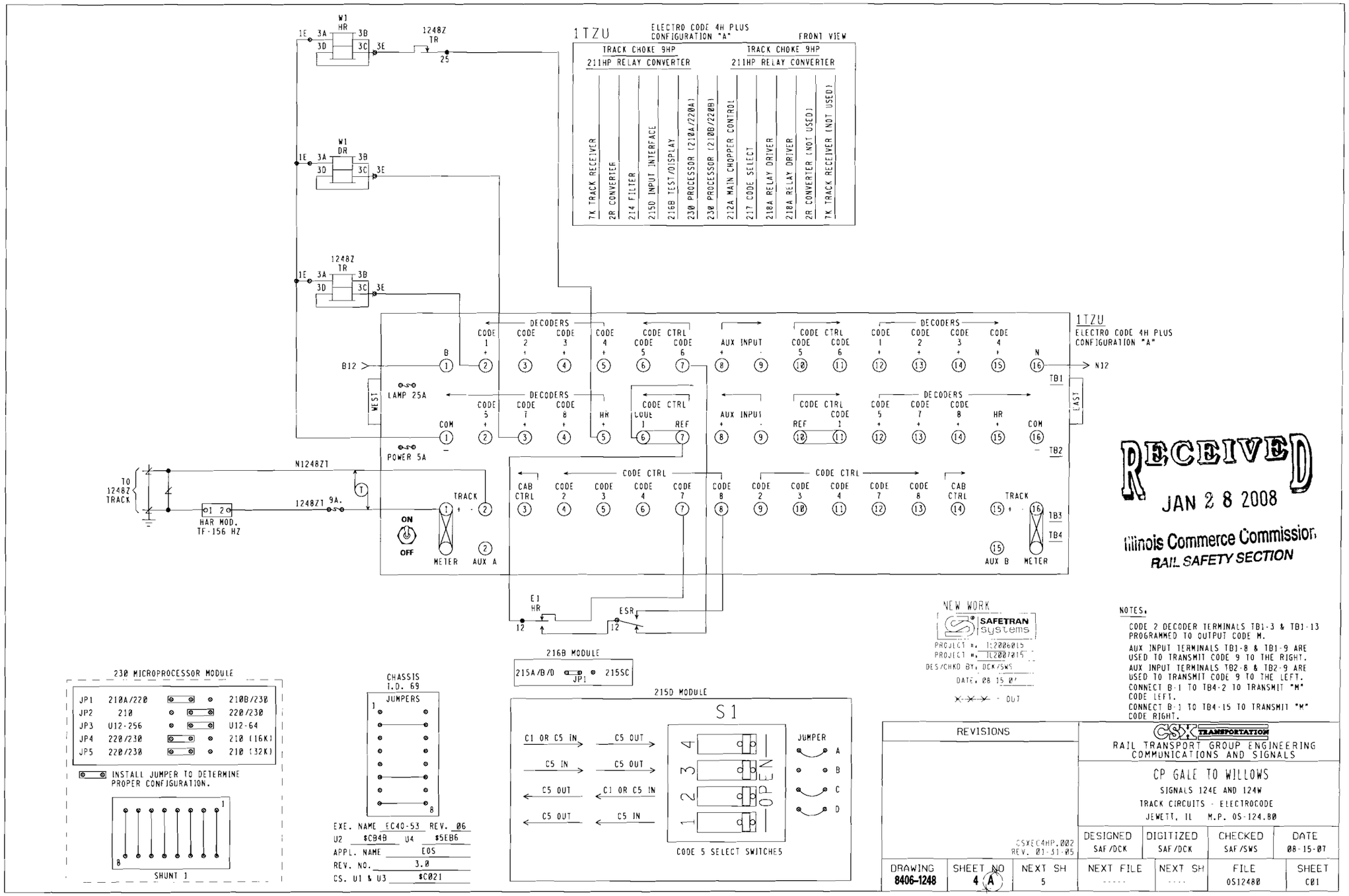

RECEIVED
JAN 28 2008
Illinois Commerce Commission
RAIL SAFETY SECTION

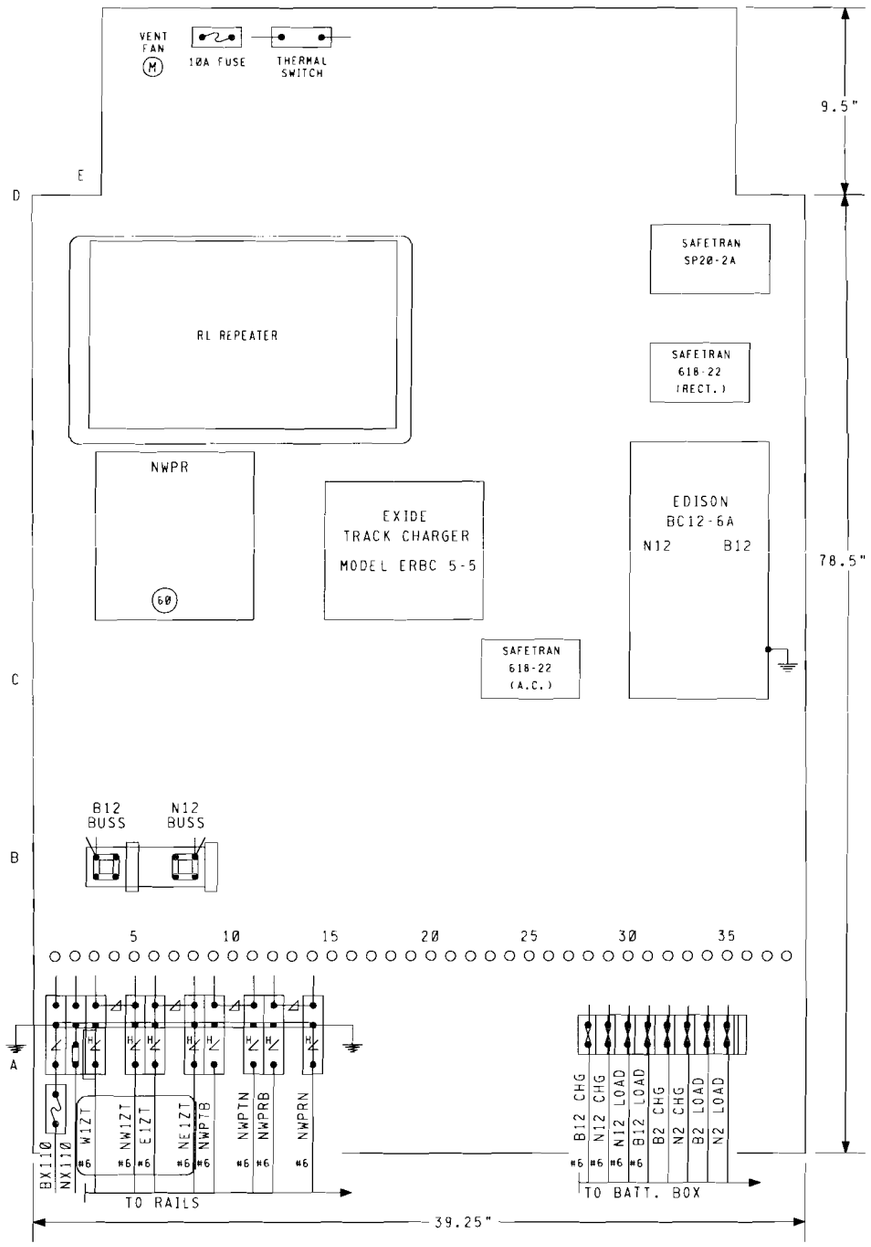

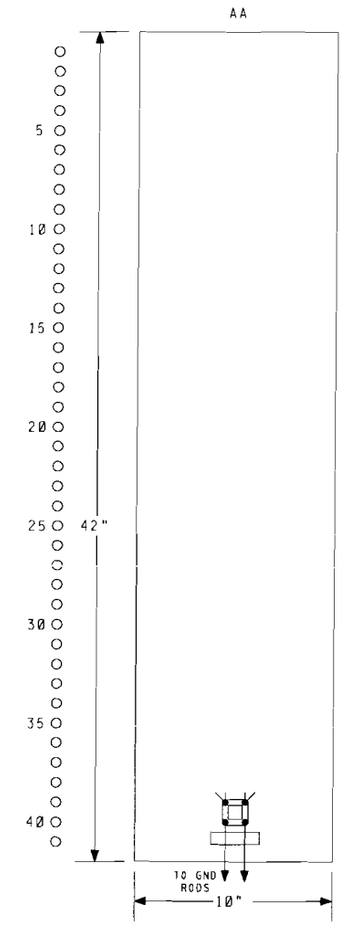

TERMINAL BOARD MOUNTED IN REAR OF CASE

RELAY FUNCTION

NWPR (60)

1 - MC-B12
2 -
3 -
4 -

NEW SHEET

SAFETRAN systems

PROJECT #: IL2006015
PROJECT #: IL2007015
DES/CHKD BY: DCK/SWS
DATE: 08-15-07

- IN
- NOTE

CSX TRANSPORTATION

RAIL TRANSPORT GROUP ENGINEERING
COMMUNICATIONS AND SIGNALS

WILLOWS TO CP GALE

ELECTROCODE REPEATER

ELECTRO CODE REPEATER CIRCUITS

JEWETT, IL M.P. QS-128.80

HtPCJT.C01
REV. 04 30 04

DESIGNED	DIGITIZED	CHECKED	DATE
SAF/DCK	SAF/DCK	SAF/SWS	08-15-07

DESIGN DATE	REV. NO.	DRAWING	SHEET NO	FILE	SHEET
08-15-07	1	8406-1288	5	QS12880	C02

INDEX

CONTENTS

SH. NO.		REVISION NO. 1	2	3	4	5	6	7	8	9
I01	TITLE, NOTES, INDEX, AND REVISIONS									
S01	TRACK AND SIGNAL PLAN									
E01	POWER DISTRIBUTION									
C01	ELECTROCODE 4 PLUS CIRCUITS									

= DESIGN COMPLETED

= REVISION COMPLETED

REVISIONS

REV. NO.	PROJECT NO.	DESIGN DATE	IN SERVICE DATE	REVISION DATE
1	IL2006015	08-15-07		
1	IL2007015	08-15-07		

TO BE COMPLETED ON A.I.S.

NEW WORK

SAFETRAN systems

PROJECT #. IL2006015
PROJECT #. IL2007015
DES/CHKD BY. DCK/SWS
DATE. 08 15 07

= OUT

= NOTE

CSX TRANSPORTATION

RAIL TRANSPORT GROUP ENGINEERING
COMMUNICATIONS AND SIGNALS

CP GALE TO WILLOWS

INTERMEDIATE SIGNAL 130W &130E

TITLE, NOTES, INDEX, AND REVISIONS

JEWETT, IL M.P. QS-130.30

1TAUTO1.I01
REV. 02-17-06

DESIGNED	DIGITIZED	CHECKED	DATE
SAF/DCK	SAF/DCK	SAF/SWS	08-15-07

DESIGN DATE	REV. NO.	DRAWING	SHEET NO	FILE	SHEET
08-15-07	1	8406-1303	1 A	QS13030	I01

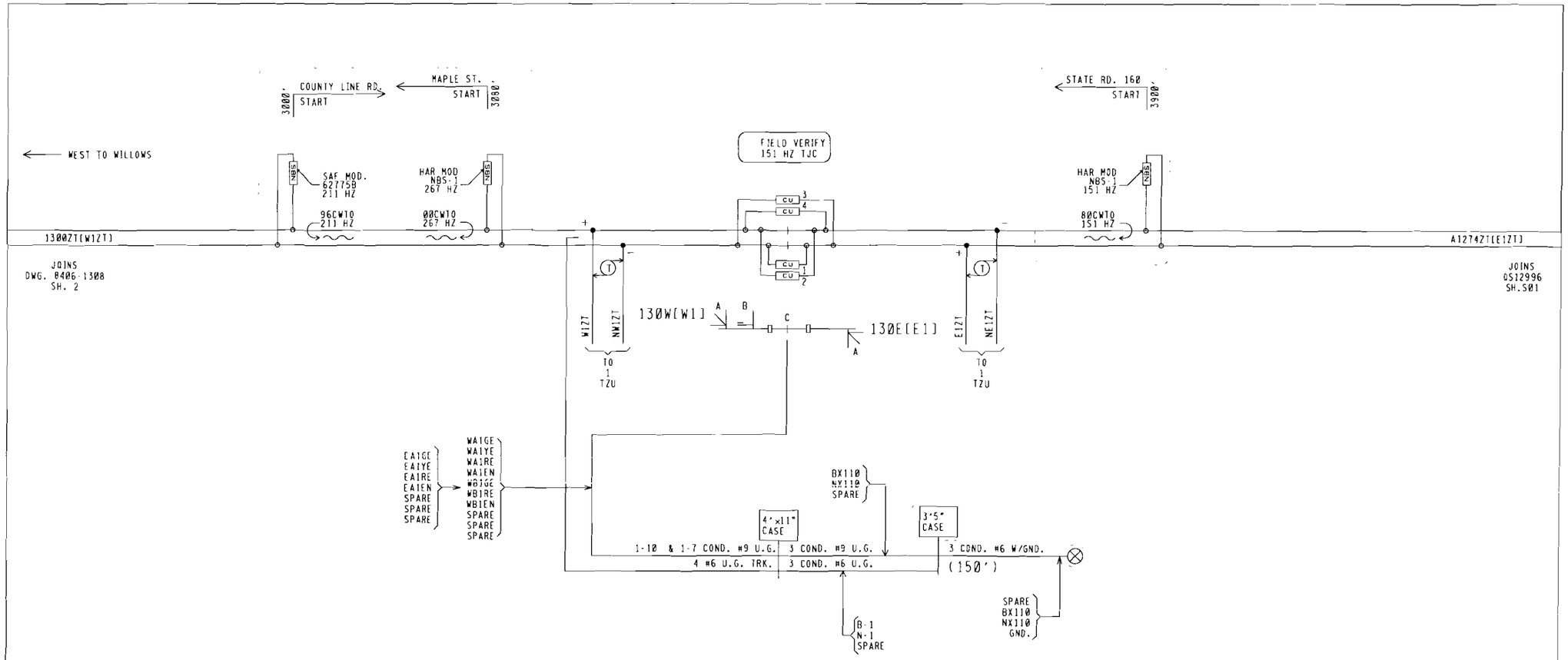

NOTE. CU-1 & 2 ARE SAF MOD.
62785-211 HZ TJC'S
CU-3,4 ARE HAR MOD.
227129-J09, 151 HZ TJC MODULES

NEW WORK EXCEPT
= EXISTING

SAFETRAN systems

PROJECT #. IL2026015
PROJECT #. IL2027015
DES/CHKD BY. DCK/SWS
DATE. 08 15 07

= NOTE
= OUT

NOTE.
[ ] = TAGGING PURPOSES ONLY

CSX TRANSPORTATION
RAIL TRANSPORT GROUP ENGINEERING
COMMUNICATIONS AND SIGNALS

CP GALE TO WILLOWS
INTERMEDIATE SIGNAL 130W &130E
TRACK AND SIGNAL PLAN
JEWETT, IL M.P. OS-130.30

ITAUT01B.S01
REV. 02 17-06

DESIGN DATE	REV. NO.	DRAWING	SHEET NO	FILE	SHEET
08-15-07	1	8406-1303	2 A	QS13030	S01 A

DESIGNED	DIGITIZED	CHECKED	DATE
SAF/DCK	SAF/DCK	SAF/SWS	08-15-07

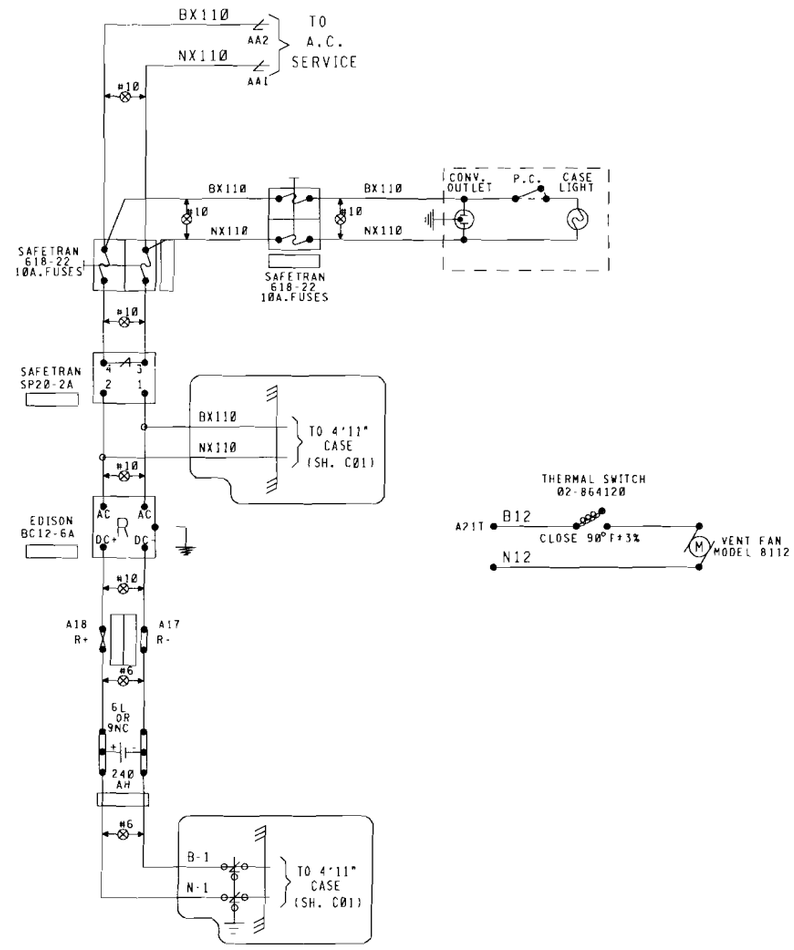

NEW SHEET

SAFETRAN systems

PROJECT #: IL2006015
PROJECT #: IL2007015
DES/CHKD BY: DCK/SWS
DATE: 08-15-07

= NOTE
- IN
= OUT

3'5" CASE

CSX TRANSPORTATION
RAIL TRANSPORT GROUP ENGINEERING
COMMUNICATIONS AND SIGNALS

CP GALE TO WILLOWS

INTERMEDIATE SIGNAL 130W &130E
POWER DISTRIBUTION
JEWETT, IL M.P. QS-130.30

1"AUTOCAD
REV. 23-31 06

DESIGN DATE	REV. NO.	DRAWING	SHEET NO	FILE	SHEET
08-15-07	1	8406-1303	3 (A)	QS13030	E01 (A)

DESIGNED	DIGITIZED	CHECKED	DATE
SAF/DCK	SAF/DCK	SAF/SWS	08-15-07

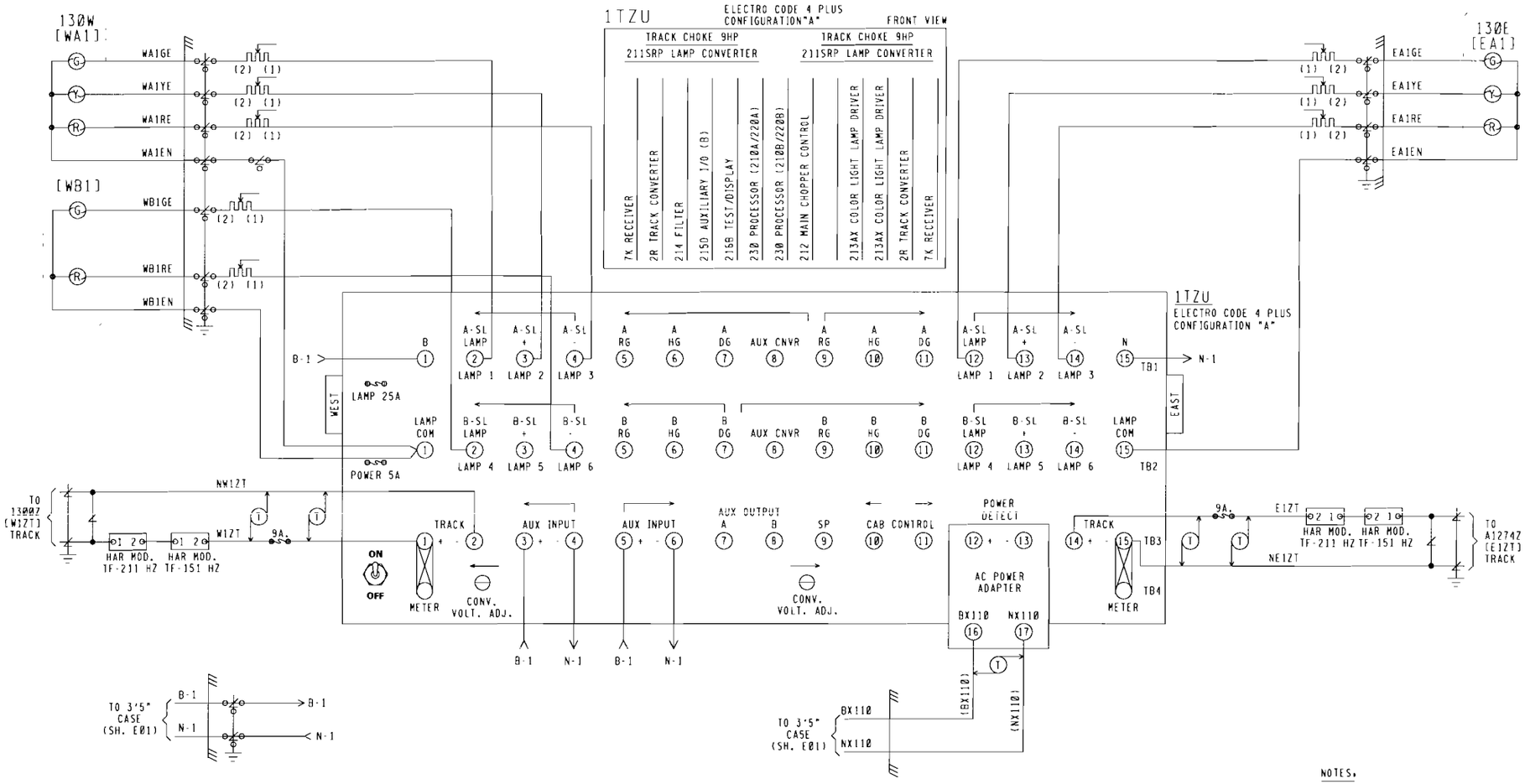

NOTES.

1. SIGNAL LIGHT RESISTORS ARE 3 OHM VARIABLE, 15 WATT, AND MOUNTED IN SIGNAL HEADS.
2. [ ] = TAGGING PURPOSES ONLY.
3. AC POWER ADAPTER - HARMON PART #610-083004-018

NEW WORK EXCEPT
= EXISTING

SAFETRAN systems

PROJECT #: IL2006015
PROJECT #: IL2007015
DES/CHKD BY: DCK/SWS
DATE: 08 15 07

= NOTE
= OUT

4'11" CASE

CSX TRANSPORTATION
RAIL TRANSPORT GROUP ENGINEERING
COMMUNICATIONS AND SIGNALS

CP GALE TO WILLOWS

INTERMEDIATE SIGNAL 130W &130E
ELECTRO CODE 4 PLUS CIRCUITS
JEWETT, IL M.P. QS-130.30

1TAL101.CD1
REV. 04 30-04

DESIGNED	DIGITIZED	CHECKED	DATE
SAF/DCK	SAF/DCK	SAF/SWS	08-15-07

DESIGN DATE	REV. NO.	DRAWING	SHEET NO	FILE	SHEET
08-15-07	1	8406-1303	4 (A)	QS13030	C01 (A)