PLAN MUST NOT BE MODIFIED WITHOUT APPROVAL OF SIGNAL ENGINEERING

REVISIONS

DESIGNED 11-07-07
INSTALL XING - MP 3.08
DGD/WMC SEQ.# 36840

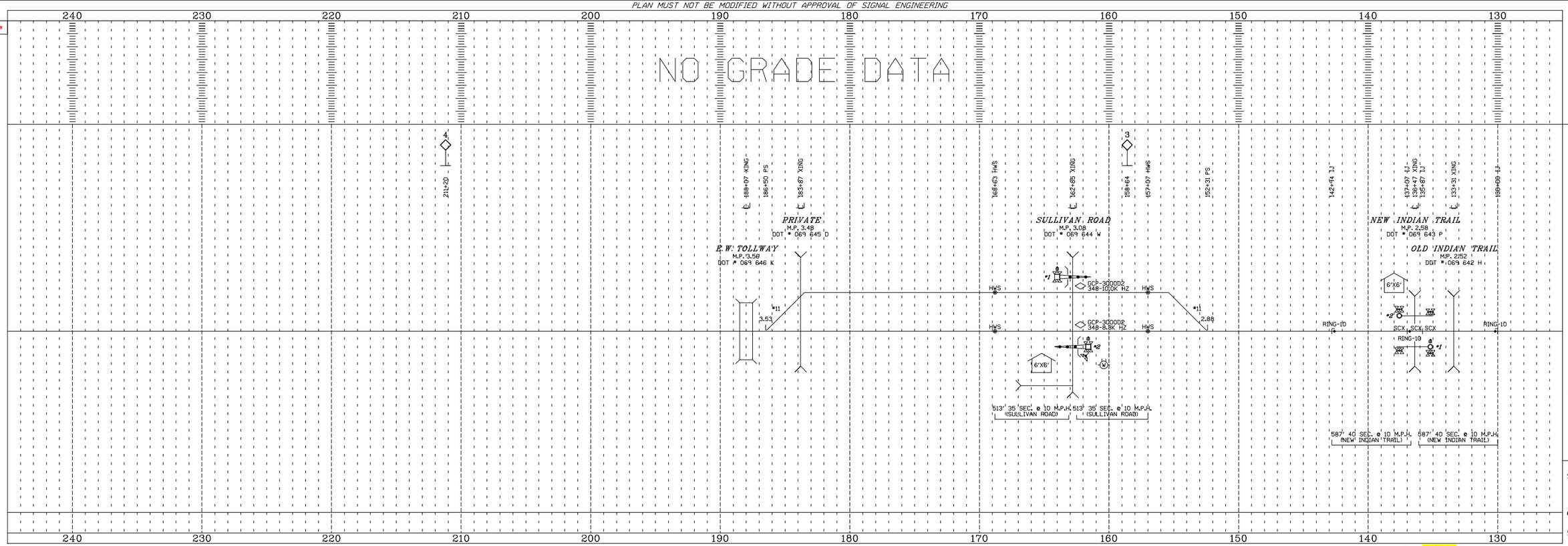

BURLINGTON NORTHERN SANTA FE RAILWAY

TRACK PROFILE AND LOCATION PLAN
AURORA TO NIFA

MP 002 TO MP 005

LS 0064

11" X 33"
SCALE:
VERT 1"=20'
HOR 1"=400'

CURVES

5½" X 16½"
SCALE:
VERT 1"=40'
HOR 1"=800'

RED = IN YELLOW = OUT * = ESTIMATED SURVEY STATION

0064002005p01c..dgn November 7, 2007

PLAN MUST NOT BE MODIFIED WITHOUT APPROVAL OF SIGNAL ENGINEERING

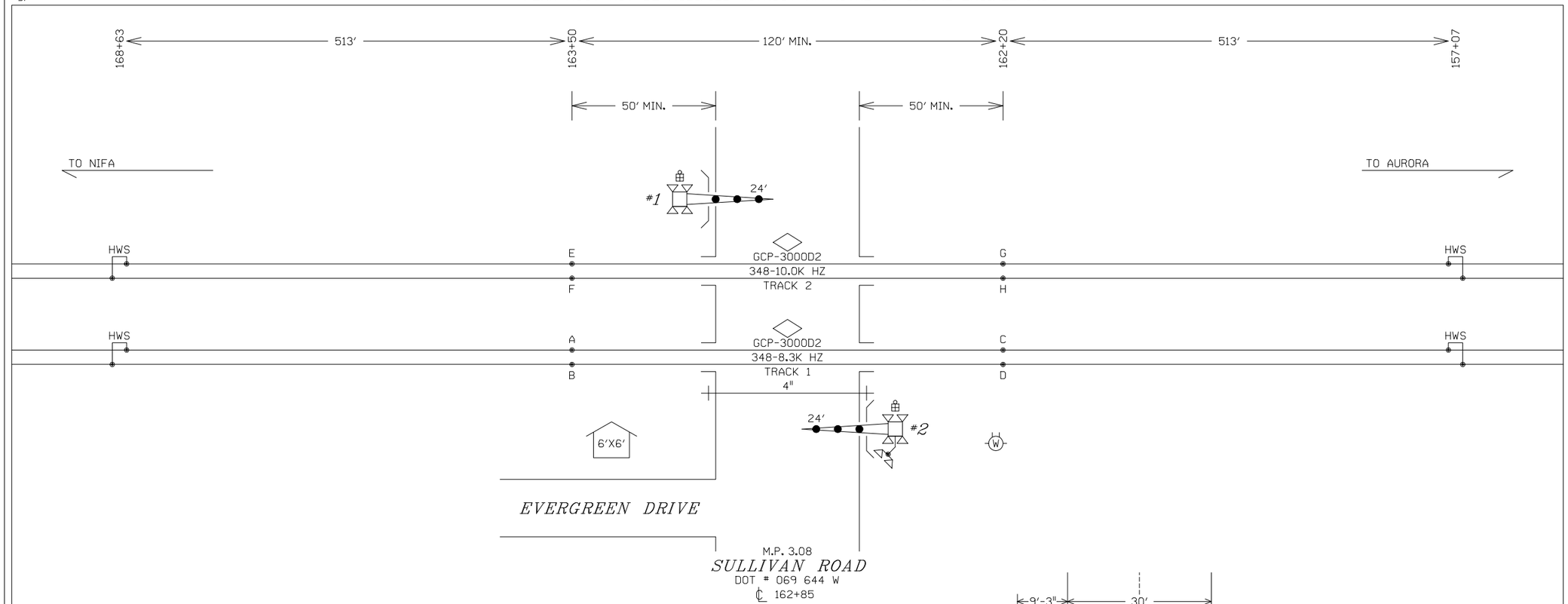

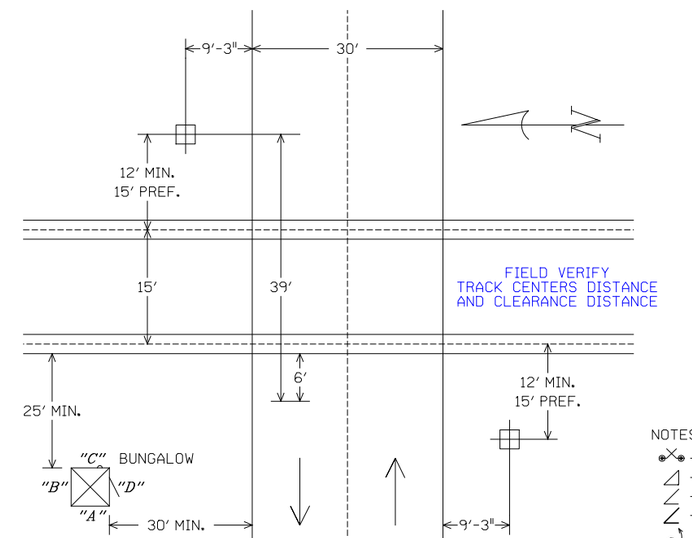

FOUNDATION PLACEMENT SKETCH
NOT TO SCALE

NOTES:

- -TEST TERMINAL
- -EQUALIZER
- -LINE ARRESTER
- -HEAVY DUTY ARRESTER
- -TWISTED WIRE 2 TURNS PER FOOT
- -CONNECTION TO REC./RTU

ALL WIRES #16 AWG UNLESS OTHERWISE NOTED

NOTES:

EQUIPMENT IS DESIGNED FOR 20 SECONDS MINIMUM WARNING TIME AT 10 MPH.
APPROACHES WERE LENGTHENED 1 SECOND(S) FOR WIDE OR ANGLED CROSSING (CT).
APPROACHES WERE LENGTHENED 10 SECONDS FOR SPEED VARIANCE AND BALLAST CHANGES (BT).
APPROACHES WERE LENGTHENED 4 SECONDS FOR EQUIPMENT RESPONSE TIME (ERT).
ALL LAMPS TO BE LED
GATE LENGTH SHOWN IS MEASURED FROM MAST C/L TO GATE TIP.

ALL NEW

DESIGNED 11-07-07
INSTALL XING - MP 3.08
DSD/WMC SEQ.# 36840

BURLINGTON NORTHERN SANTA FE RAILWAY

CROSSING CIRCUIT PLAN
SULLIVAN ROAD NORTH AURORA, IL.

LS 0064	MP 3.08	SH 01 OF 10

PLAN MUST NOT BE MODIFIED WITHOUT APPROVAL OF SIGNAL ENGINEERING

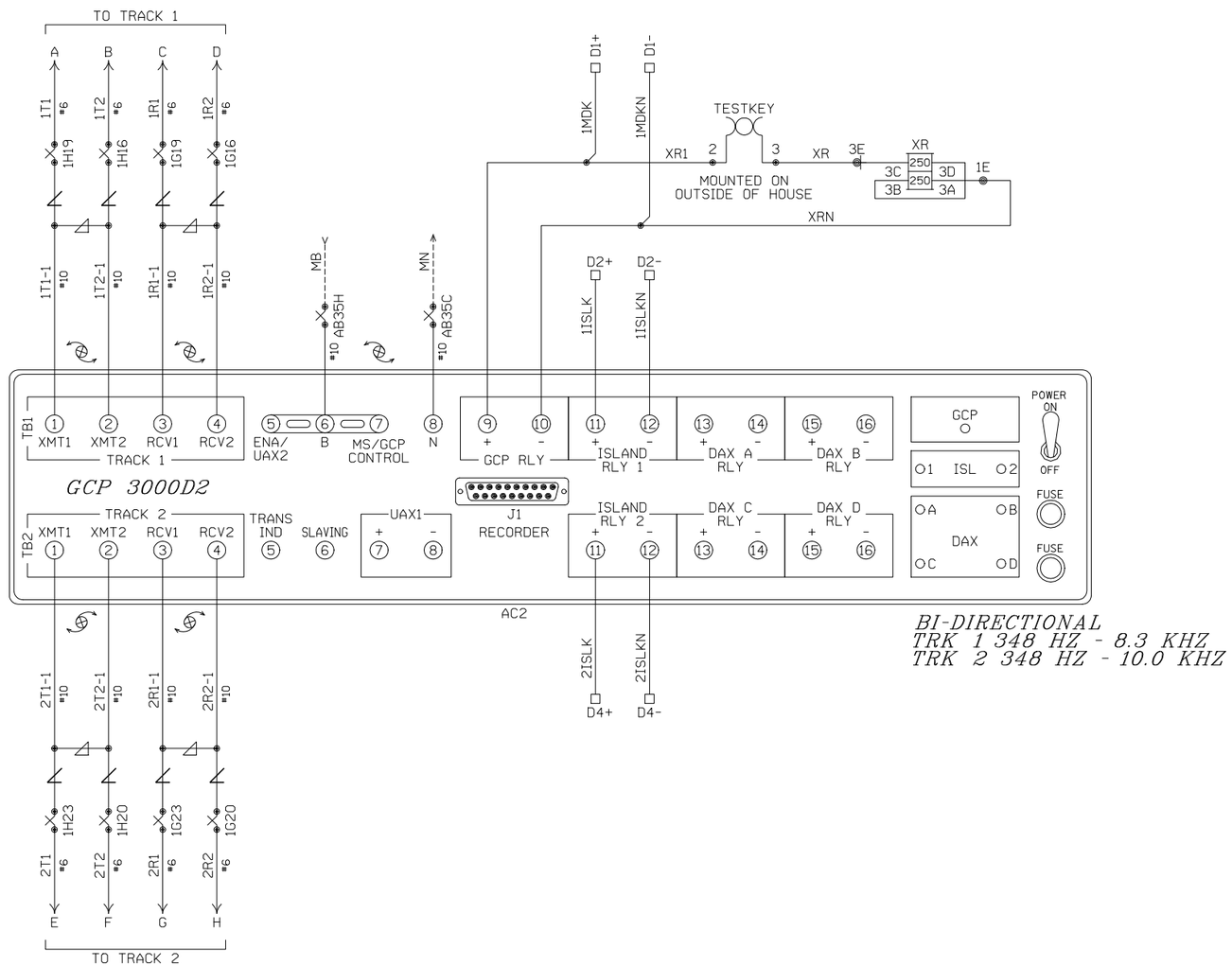

BI-DIRECTIONAL
TRK 1 348 HZ - 8.3 KHZ
TRK 2 348 HZ - 10.0 KHZ

PROGRAM INFORMATION

PROGRAM VERSION J OR LATER

*=FIELD ADJUSTMENT TO BE MADE ACCORDING TO THE GCP INSTRUCTION MANUAL AND SUPPLEMENTS.

NUMBER OF TRACKS	2	
TRACKS ASSIGNMENT	TRACK 1	TRACK 2
FREQUENCY	348 HZ	348 HZ
UNIDIRECTIONAL/BIDIRECTIONAL	BI	BI
TRANSMIT LEVEL	MED	MED
PREDICTOR/MOTION SENSOR	PRED	PRED
WARNING TIME SELECTED	31 SEC.	31 SEC.
APPROACH DISTANCE SELECTED	513′	513′
APPROACH DISTANCE COMPUTED	COMPUTED	COMPUTED
UAX1 PICK UP DELAY	0 SEC.	N/A
ENA/UAX2 PICK UP DELAY (0=ENA)	N/A	0 SEC.
ISLAND DISTANCE	130′ SEE BELOW	130′ SEE BELOW
NUMBER OF DAXS	0	
DAX "A" DISTANCE	N/A	N/A
DAX "A" WARNING TIME	N/A	N/A
DAX "B" DISTANCE	N/A	N/A
DAX "B" WARNING TIME	N/A	N/A
DAX "C" DISTANCE	N/A	N/A
DAX "C" WARNING TIME	N/A	N/A
DAX "D" DISTANCE	N/A	N/A
DAX "D" WARNING TIME	N/A	N/A
SLAVING MASTER/SLAVE	MASTER	
PASSWORD ENABLE	DISABLED	
RECORDER INSTALLED	INSTALLED	

FUNCTION INFORMATION

TRACKS ASSIGNMENT	TRACK 1	TRACK 2
SWITCH TO MS (ENTER EZ LEVEL)	10 (DL)	10 (DL)
TRANSFER DELAY MS TO GCP	0 (OFF)	0 (OFF)
TRANSFER MS TO GCP PRIME	N/A	N/A
TRANSFER MS TO GCP DAX "A"	N/A	N/A
TRANSFER MS TO GCP DAX "B"	N/A	N/A
TRANSFER MS TO GCP DAX "C"	N/A	N/A
TRANSFER MS TO GCP DAX "D"	N/A	N/A
PRIME PREDICTION OFFSET	0 (OFF)	0 (OFF)
PICKUP DELAY PRIME	15 SEC. (DL)	15 SEC. (DL)
PICKUP DELAY DAX "A"	N/A	N/A
PICKUP DELAY DAX "B"	N/A	N/A
PICKUP DELAY DAX "C"	N/A	N/A
PICKUP DELAY DAX "D"	N/A	N/A
COMPENSATION VALUE	N/A	N/A
ENHANCED DETECTION (ED)	OFF (DL)	OFF (DL)
BACK TO BACK T1 & T2	N/A	N/A
STATION STOP TIMER	N/A	N/A
NUMBER OF TRACK WIRES - 4 OR 6	4	4
LOW EX ADJUSTMENT	0 (DL)	0 (DL)
LOW EZ DETECTION	OFF (DL)	OFF (DL)
LOW EZ DETECTION TIMER	N/A	N/A
POSITIVE START	0 (OFF)	0 (OFF)
POSITIVE START TIMEOUT	N/A	N/A
SET AT OPERATION	NORMAL	NORMAL
ADVANCE PREEMPT TIMER	0 SEC. (DL)	0 SEC. (DL)
MOTION SENSING LEVEL	0 (NORMAL)	0 (NORMAL)

NOTES:

1.) FOR ISLAND DISTANCE MEASURE THE DISTANCE BETWEEN THE TRANSMITTER AND RECEIVER LEADS AND ENTER ON CHART - MUST BE 120′ MINIMUM.

2.) DL= DEFAULT LEVEL
N/A = NON APPLICABLE

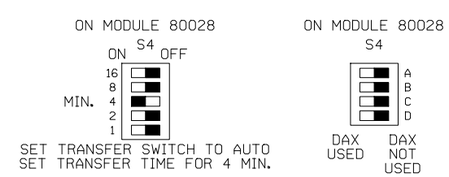

ALL NEW

BURLINGTON NORTHERN SANTA FE RAILWAY

GCP-3000D2 TRACK CIRCUITS
SULLIVAN ROAD NORTH AURORA, IL.

DESIGNED 11-07-07
INSTALL XING - MP 3.08
DSD/WMC SEQ.# 36840

LS 0064 | MP 3.08 | SH 02 OF 10

PLAN MUST NOT BE MODIFIED WITHOUT APPROVAL OF SIGNAL ENGINEERING

PROGRAM BNSF4

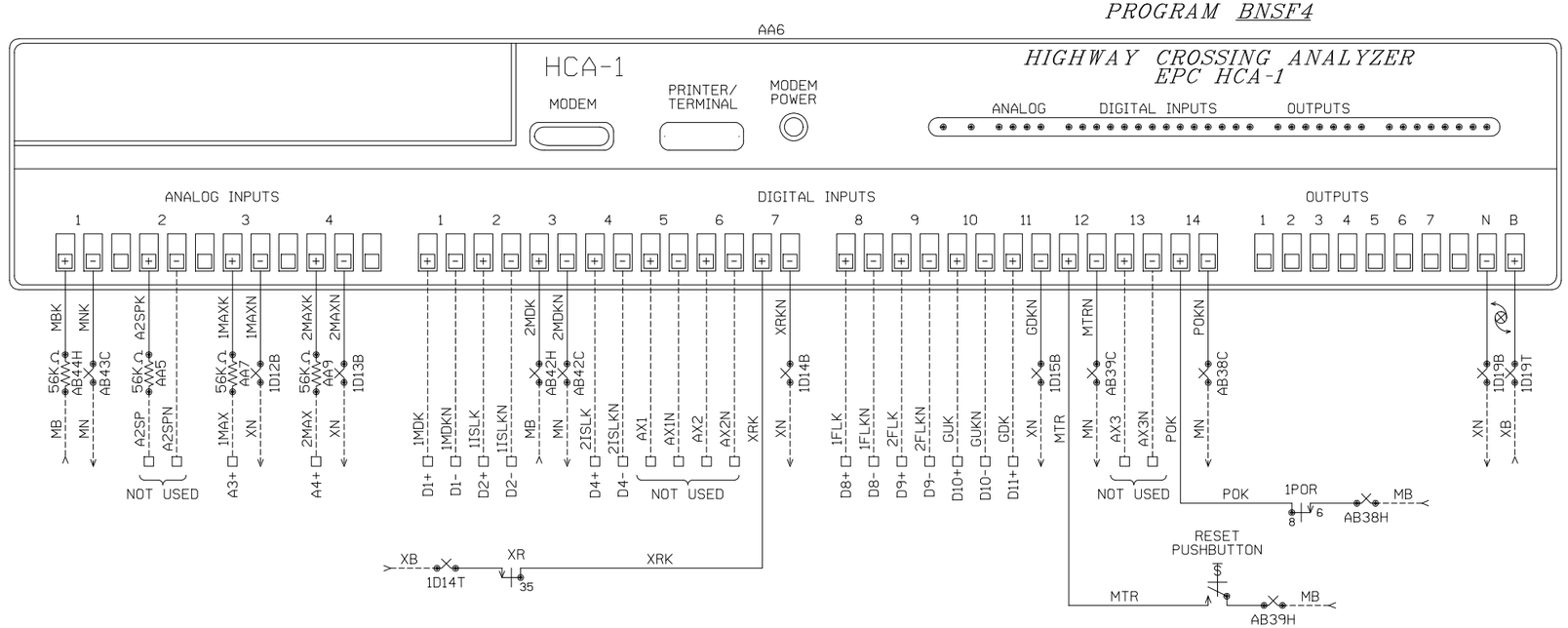

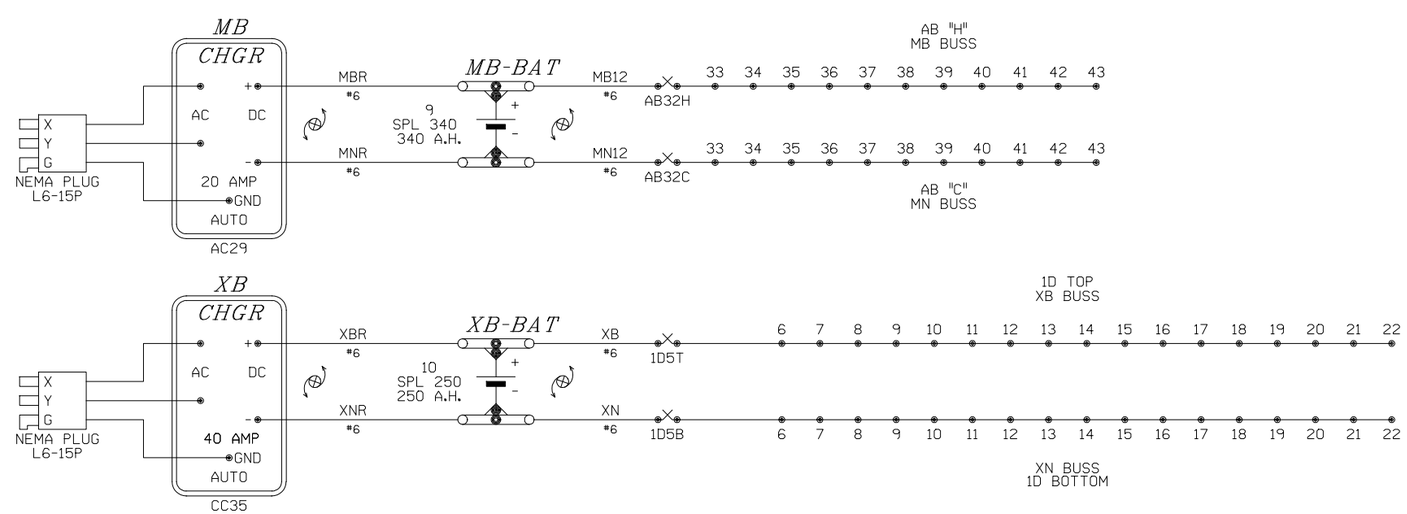

ALL NEW

DESIGNED 11-07-07
INSTALL XING - MP 3.08
DSD/WMC SEQ.# 36840

BURLINGTON NORTHERN SANTA FE RAILWAY

RECORDER AND BATTERY CIRCUITS
SULLIVAN ROAD NORTH AURORA, IL.

LS 0064 | MP 3.08 | SH 03 OF 10

PLAN MUST NOT BE MODIFIED WITHOUT APPROVAL OF SIGNAL ENGINEERING

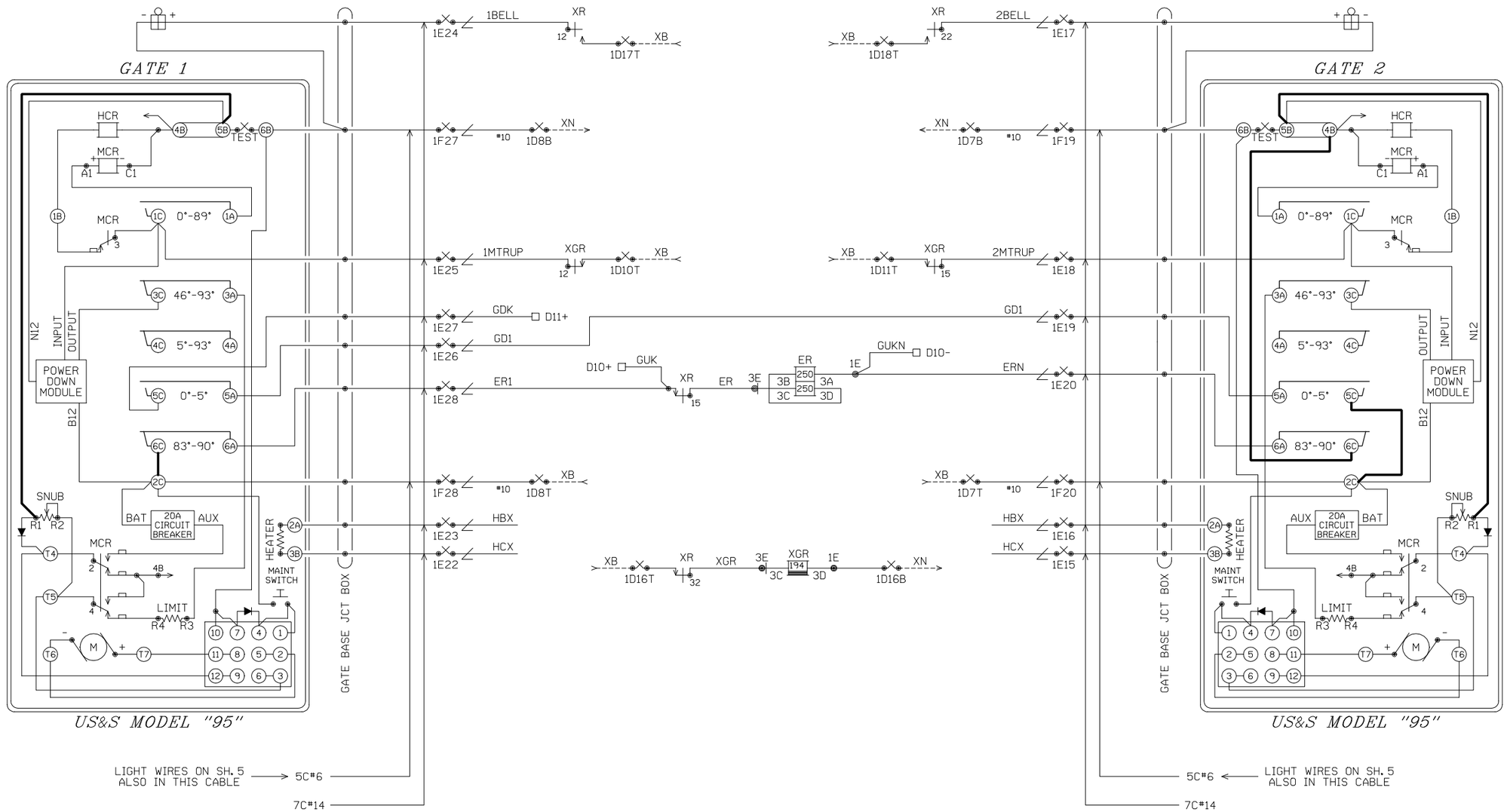

NOTE:
ADD JUMPERS IN GATE SHOWN IN BOLD.

ALL NEW

DESIGNED 11-07-07
INSTALL XING - MP 3.08
DSD/WMC SEQ.# 36840

BURLINGTON NORTHERN SANTA FE RAILWAY

GATE CIRCUIT PLAN
SULLIVAN ROAD NORTH AURORA, IL.

LS 0064 | MP 3.08 | SH 04 OF 10

PLAN MUST NOT BE MODIFIED WITHOUT APPROVAL OF SIGNAL ENGINEERING

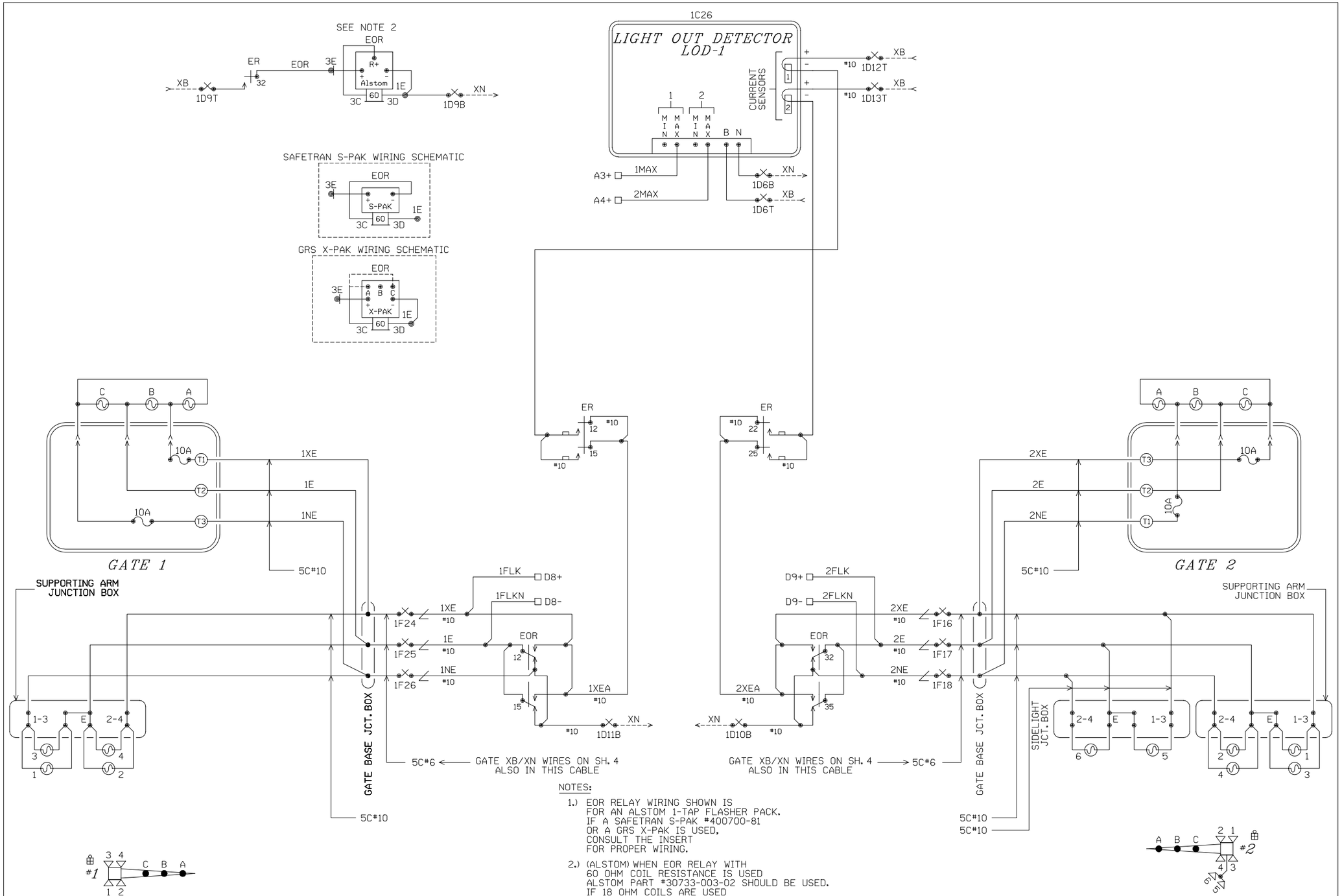

NOTES:

1.) EOR RELAY WIRING SHOWN IS FOR AN ALSTOM 1-TAP FLASHER PACK. IF A SAFETRAN S-PAK #400700-81 OR A GRS X-PAK IS USED, CONSULT THE INSERT FOR PROPER WIRING.

2.) (ALSTOM) WHEN EOR RELAY WITH 60 OHM COIL RESISTANCE IS USED ALSTOM PART #30733-003-02 SHOULD BE USED. IF 18 OHM COILS ARE USED ALSTOM PART #30733-003-04 SHOULD BE USED.

3.) (X-PAK) WHEN EOR RELAY WITH 60 OHM COIL RESISTANCE IS USED CONNECT JUMPER FROM 3C TO "A". IF 18 OHM COILS ARE USED CONNECT JUMPER FROM 3C TO "C".

4.) (S-PAK) DO NOT USE S-PAK WITH 18 OHM COILS

ALL NEW

DESIGNED 11-07-07
INSTALL XING - MP 3.08
DSD/WMC SEQ.# 36840

BURLINGTON NORTHERN SANTA FE RAILWAY

FLASHER CIRCUIT PLAN
SULLIVAN ROAD NORTH AURORA, IL.

LS 0064 | MP 3.08 | SH 05 OF 10

PLAN MUST NOT BE MODIFIED WITHOUT APPROVAL OF SIGNAL ENGINEERING

SIDE D

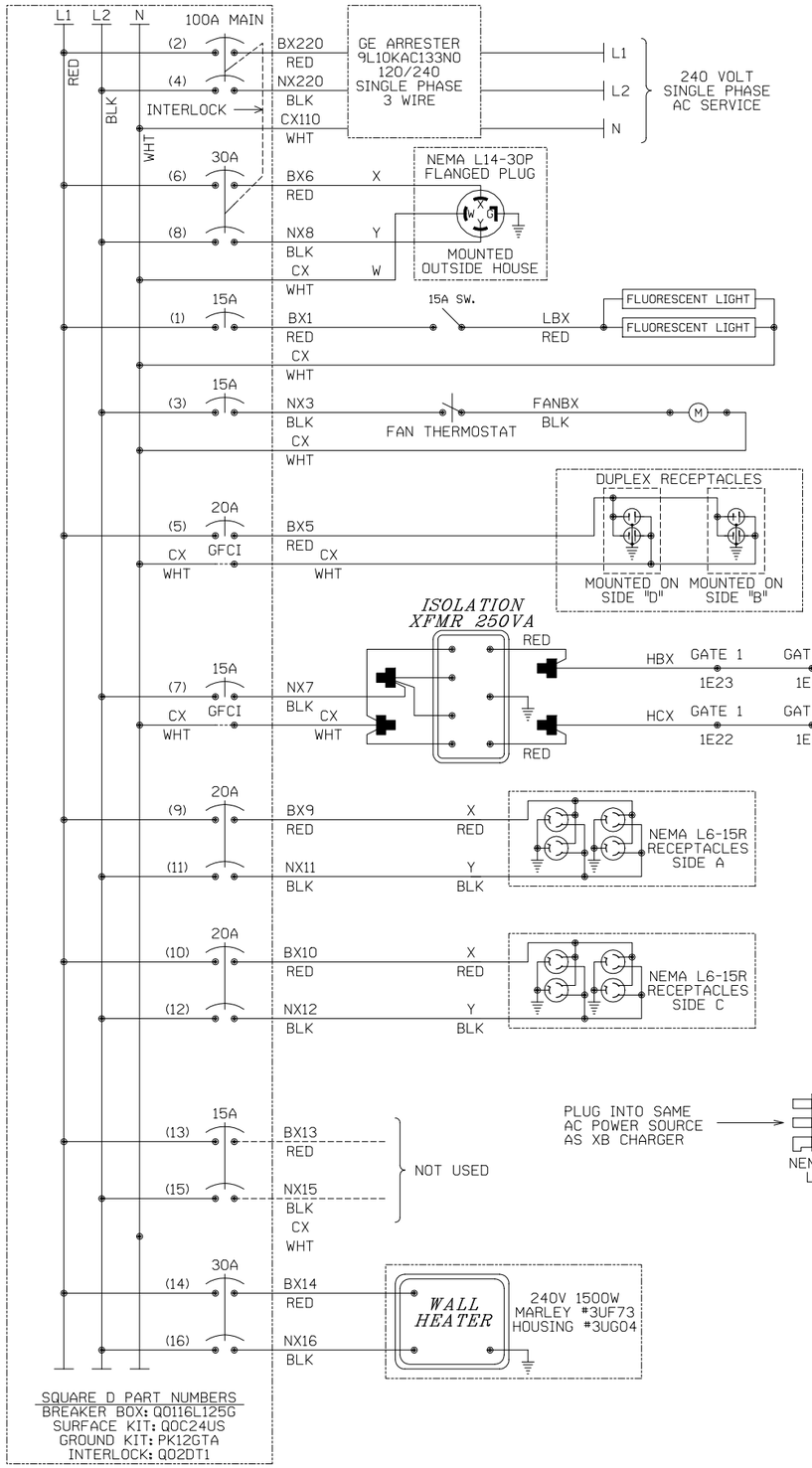

NOTES:

1. USE THE FOLLOWING COLOR CODE:
   GRN - GREEN - SAFETY EQUIPMENT GROUND
   WHT - WHITE - CX110 (NEUTRAL)
   BLK - BLACK - NX220 (L2)
   RED - RED - BX220 (L1)
   EXCEPTIONS TO THE ABOVE COLOR CODE ARE THE PRE-WIRED, SEALED ARRESTOR UNITS MOUNTED ON THE BREAKER BOX WHICH HAVE TWO BLACK AND ONE WHITE WIRE EACH.
2. = WIRE NUT
3. MINIMUM WIRE SIZE
   10 AMP - NO.14 AWG THHN OR THWN SOLID
   20 AMP - NO.12 AWG THHN OR THWN SOLID
   30 AMP - NO.10 AWG THHN OR THWN SOLID
4. GROUND FAULT INTERRUPT (GFCI) MUST BE USED ON ALL CIRCUITS SERVING CONVENIENCE OUTLETS AND ANY EQUIPMENT OUTSIDE THE BUNGALOW. RECEPTACLE MOUNTED GFCI MAY BE USED INSTEAD OF BREAKER TYPE.
5. ISOLATION TRANSFORMER IF INSTALLED.
   OLD JUMPER WIRES BLK/YEL TO BLK/GRN WITH CX (WHT)
   JUMPER WIRES BLK TO BLK/RED WITH NX7 (BLK)
   NEW JUMPER WIRES YEL TO BRN WITH CX (WHT)
   JUMPER WIRES BLK TO BLU WITH NX7 (BLK)
6. ALL GROUND WIRES RUN TO BREAKER BOX GROUND BUSS

RTU POWER OFF UNIT LAYOUT

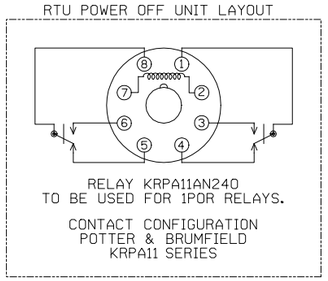

RELAY KRPA11AN240 TO BE USED FOR 1POR RELAYS.

CONTACT CONFIGURATION POTTER & BRUMFIELD KRPA11 SERIES

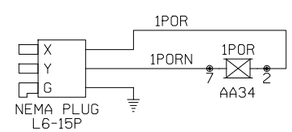

POWER OFF LED
CONSTANT ON AC
FLASH ON DC INDICATOR

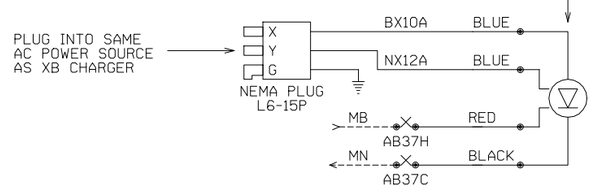

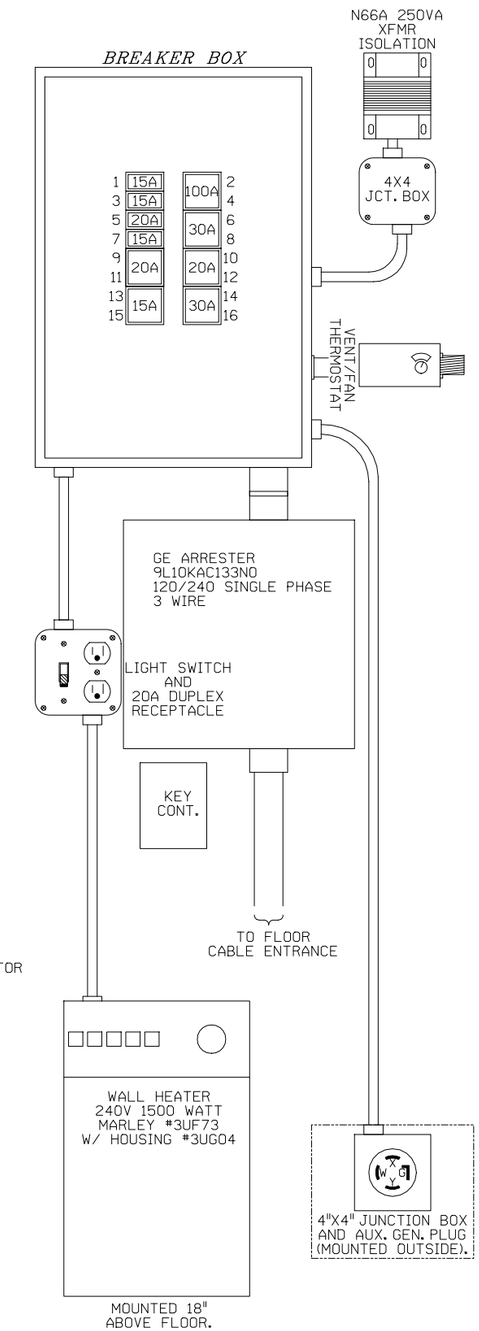

A

B

C

ALL NEW

DESIGNED 11-07-07
INSTALL XING - MP 3.08
DSD/WMC SEQ.# 36840

BURLINGTON NORTHERN SANTA FE RAILWAY

POWER DISTRIBUTION
SULLIVAN ROAD NORTH AURORA, IL.

LS 0064 | MP 3.08 | SH 06 OF 10

PLAN MUST NOT BE MODIFIED WITHOUT APPROVAL OF SIGNAL ENGINEERING

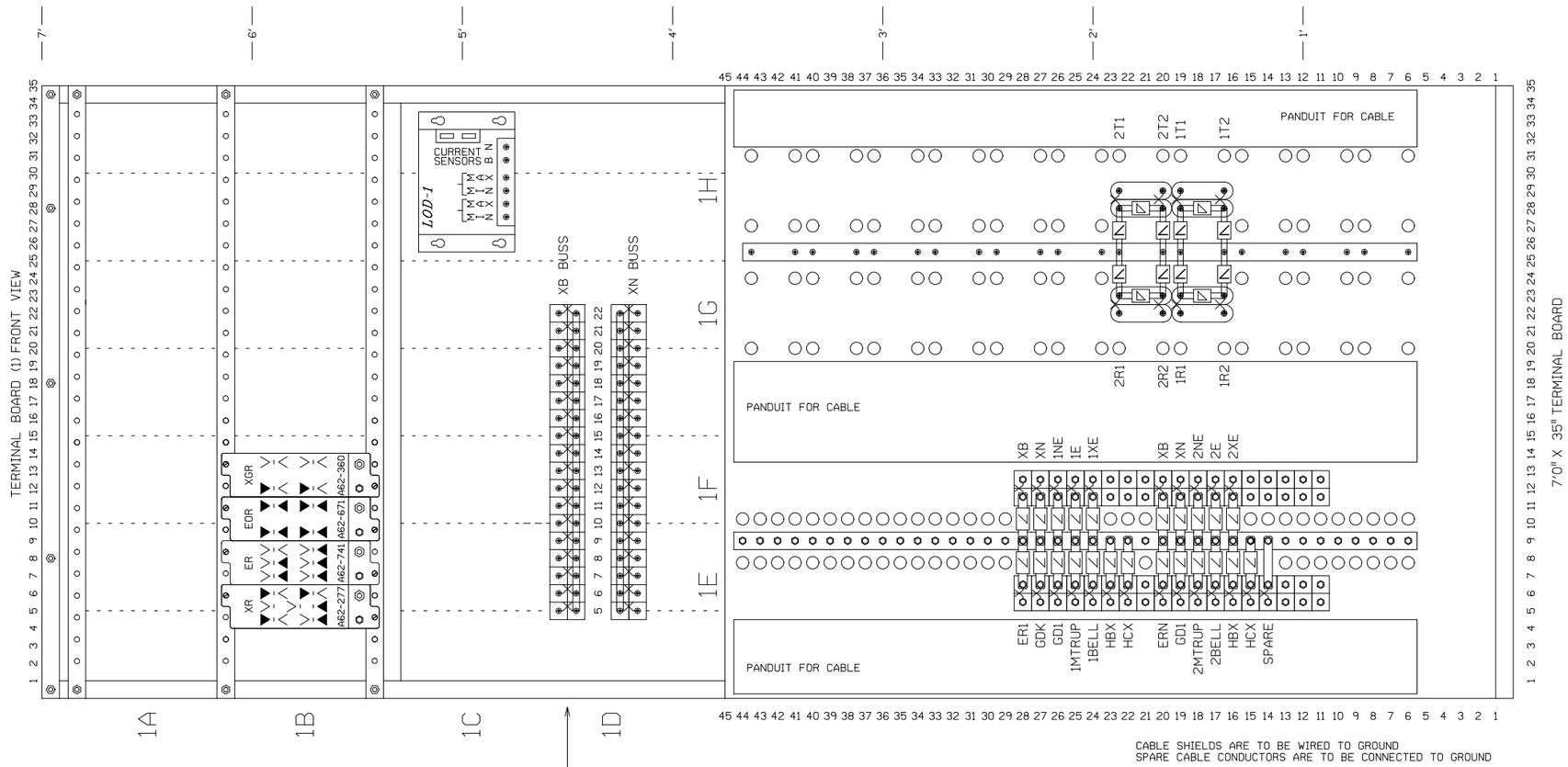

CABLE SHIELDS ARE TO BE WIRED TO GROUND
SPARE CABLE CONDUCTORS ARE TO BE CONNECTED TO GROUND

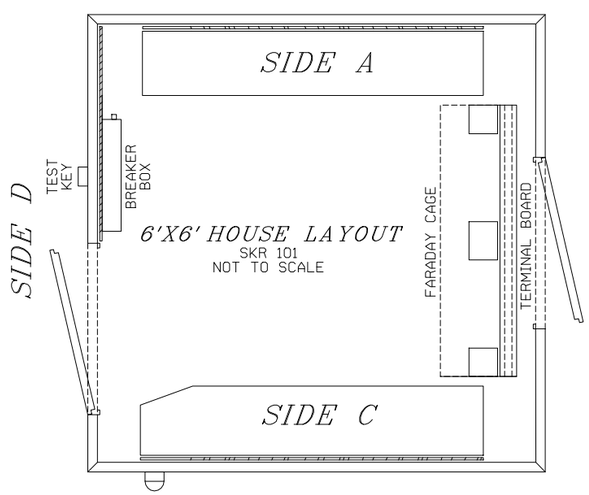

NOTE: INSTALL POWER OFF INDICATOR LIGHT ON TRACK SIDE NEAREST THE HIGHWAY AND NEAR EAVE OF HOUSE.

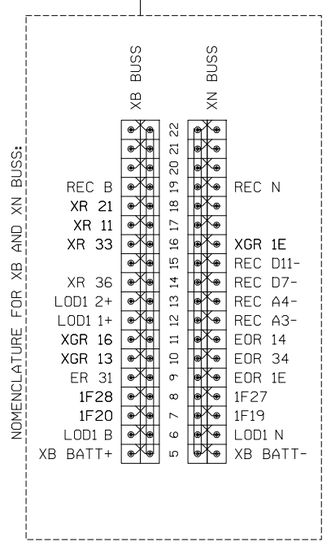

FARADAY CAGE LAYOUT NOTES:

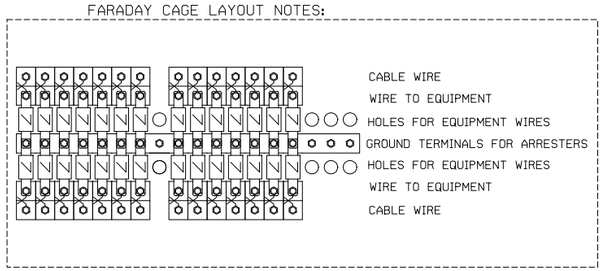

RELAY CROSS REFERENCE

GRS	SAFETRAN
A62-277	400004
A62-741	400005
A62-671	400700
A62-360	400200

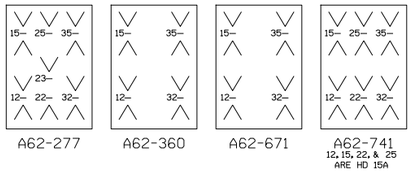

▼ = CONTACT USED

V = CONTACT NOT USED

ALL NEW

DESIGNED 11-07-07
INSTALL XING - MP 3.08
DSD/WMC SEQ.# 36840

BURLINGTON NORTHERN SANTA FE RAILWAY

TERMINAL BOARD LAYOUT
SULLIVAN ROAD NORTH AURORA, IL.

LS 0064 | MP 3.08 | SH 07 OF 10

PLAN MUST NOT BE MODIFIED WITHOUT APPROVAL OF SIGNAL ENGINEERING

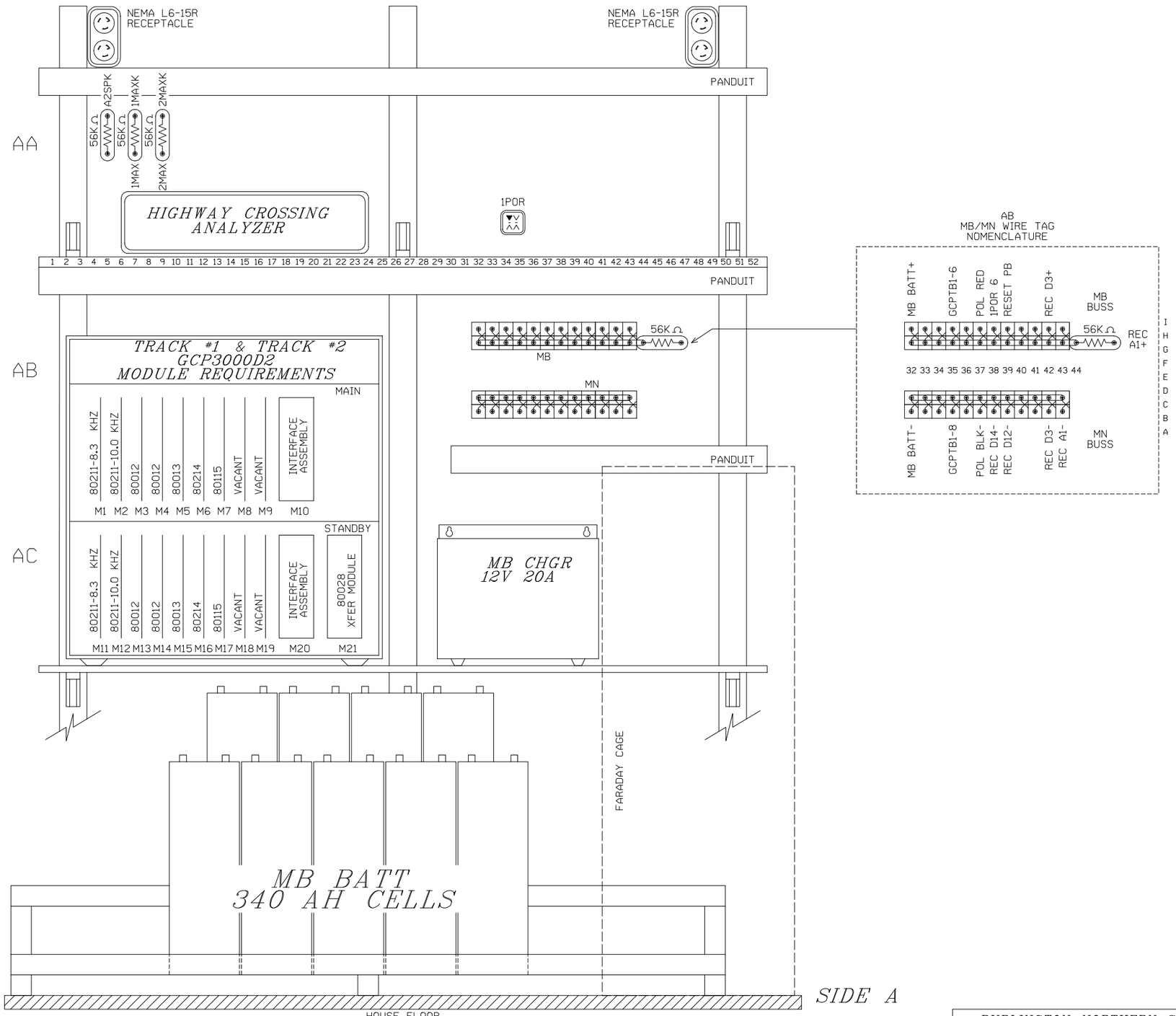

ALL NEW

BURLINGTON NORTHERN SANTA FE RAILWAY		
SIDE "A" SHELF LAYOUT SULLIVAN ROAD NORTH AURORA, IL.		
DESIGNED 11-07-07 INSTALL XING - MP 3.08 DSD/WMC SEQ.# 36840	LS 0064	MP 3.08	SH 08 OF 10

PLAN MUST NOT BE MODIFIED WITHOUT APPROVAL OF SIGNAL ENGINEERING

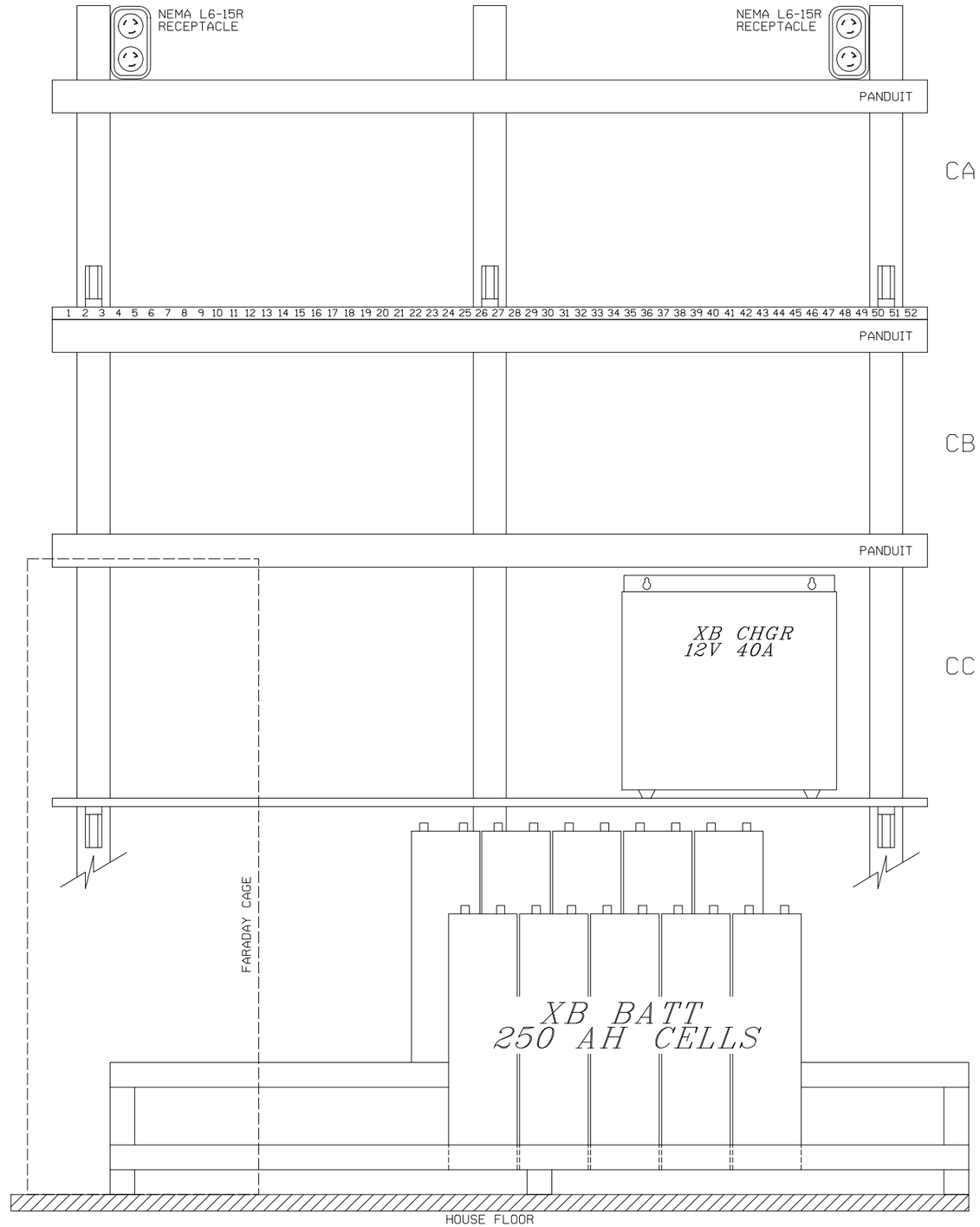

SIDE C

ALL NEW

BURLINGTON NORTHERN SANTA FE RAILWAY

SIDE "C" SHELF LAYOUT
SULLIVAN ROAD NORTH AURORA, IL.

DESIGNED 11-07-07
INSTALL XING - MP 3.08
DSD/WMC SEQ.= 36840

LS 0064 | MP 3.08 | SH 09 OF 10

PLAN MUST NOT BE MODIFIED WITHOUT APPROVAL OF SIGNAL ENGINEERING

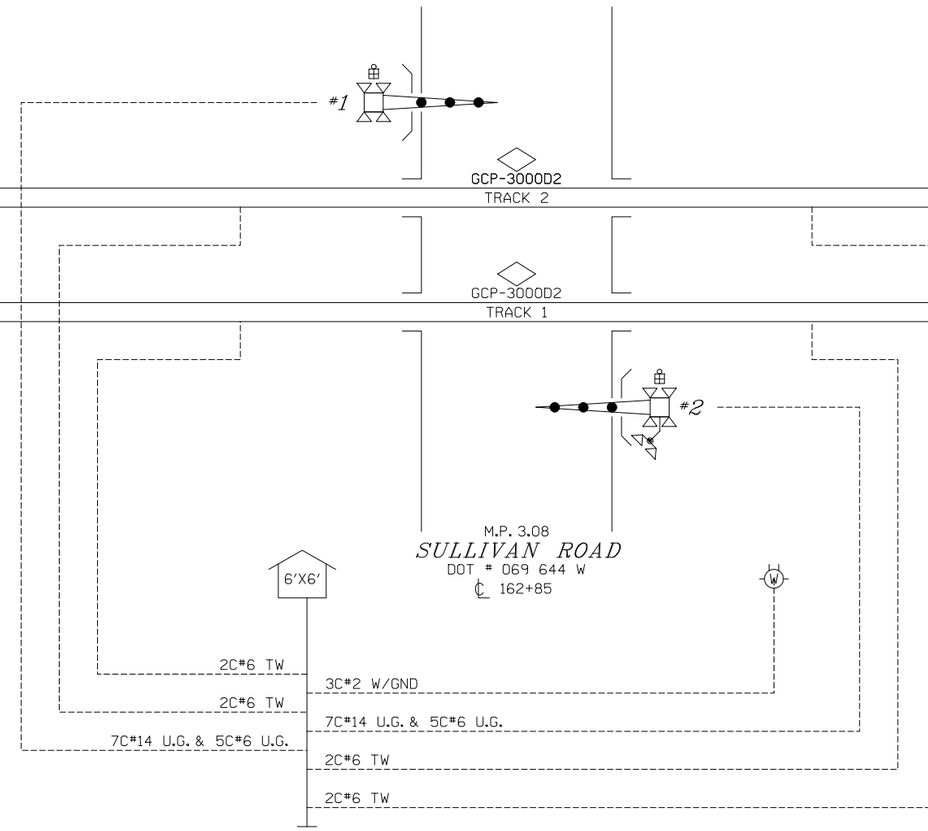

ALL NEW

BURLINGTON NORTHERN SANTA FE RAILWAY

CABLE LAYOUT
SULLIVAN ROAD NORTH AURORA, IL.

DESIGNED 11-07-07
INSTALL XING - MP 3.08
DSD/WMC SEQ.# 36840

LS 0064 | MP 3.08 | SH 10 OF 10