PLAN MUST NOT BE MODIFIED WITHOUT APPROVAL OF SIGNAL ENGINEERING

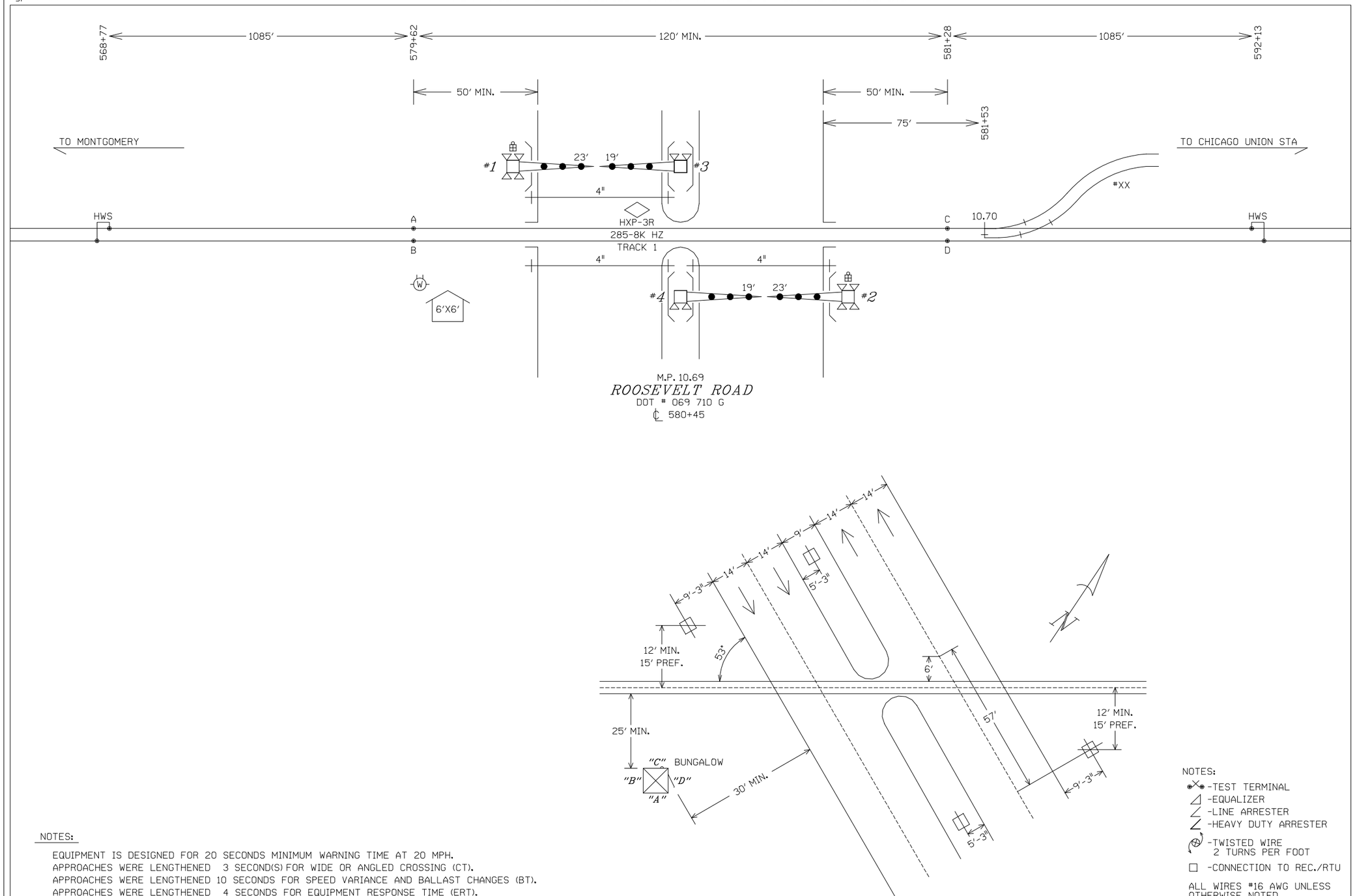

NOTES:

EQUIPMENT IS DESIGNED FOR 20 SECONDS MINIMUM WARNING TIME AT 20 MPH.
APPROACHES WERE LENGTHENED 3 SECOND(S) FOR WIDE OR ANGLED CROSSING (CT).
APPROACHES WERE LENGTHENED 10 SECONDS FOR SPEED VARIANCE AND BALLAST CHANGES (BT).
APPROACHES WERE LENGTHENED 4 SECONDS FOR EQUIPMENT RESPONSE TIME (ERT).
ALL LAMPS TO BE LED
GATE LENGTH SHOWN IS MEASURED FROM MAST C/L TO GATE TIP.

FOUNDATION PLACEMENT SKETCH
NOT TO SCALE

NOTES:

-TEST TERMINAL
-EQUALIZER
-LINE ARRESTER
-HEAVY DUTY ARRESTER
-TWISTED WIRE 2 TURNS PER FOOT
-CONNECTION TO REC./RTU

ALL WIRES #16 AWG UNLESS OTHERWISE NOTED

ALL NEW

DESIGNED 07-23-07
INSTALL XING-MP 10.69
DSD/MAD SEQ.# 36434

BURLINGTON NORTHERN SANTA FE RAILWAY

CROSSING CIRCUIT PLAN
ROOSEVELT ROAD WEST CHICAGO, IL.

LS 0065 | MP 10.69 | SH 01 OF 13

PLAN MUST NOT BE MODIFIED WITHOUT APPROVAL OF SIGNAL ENGINEERING

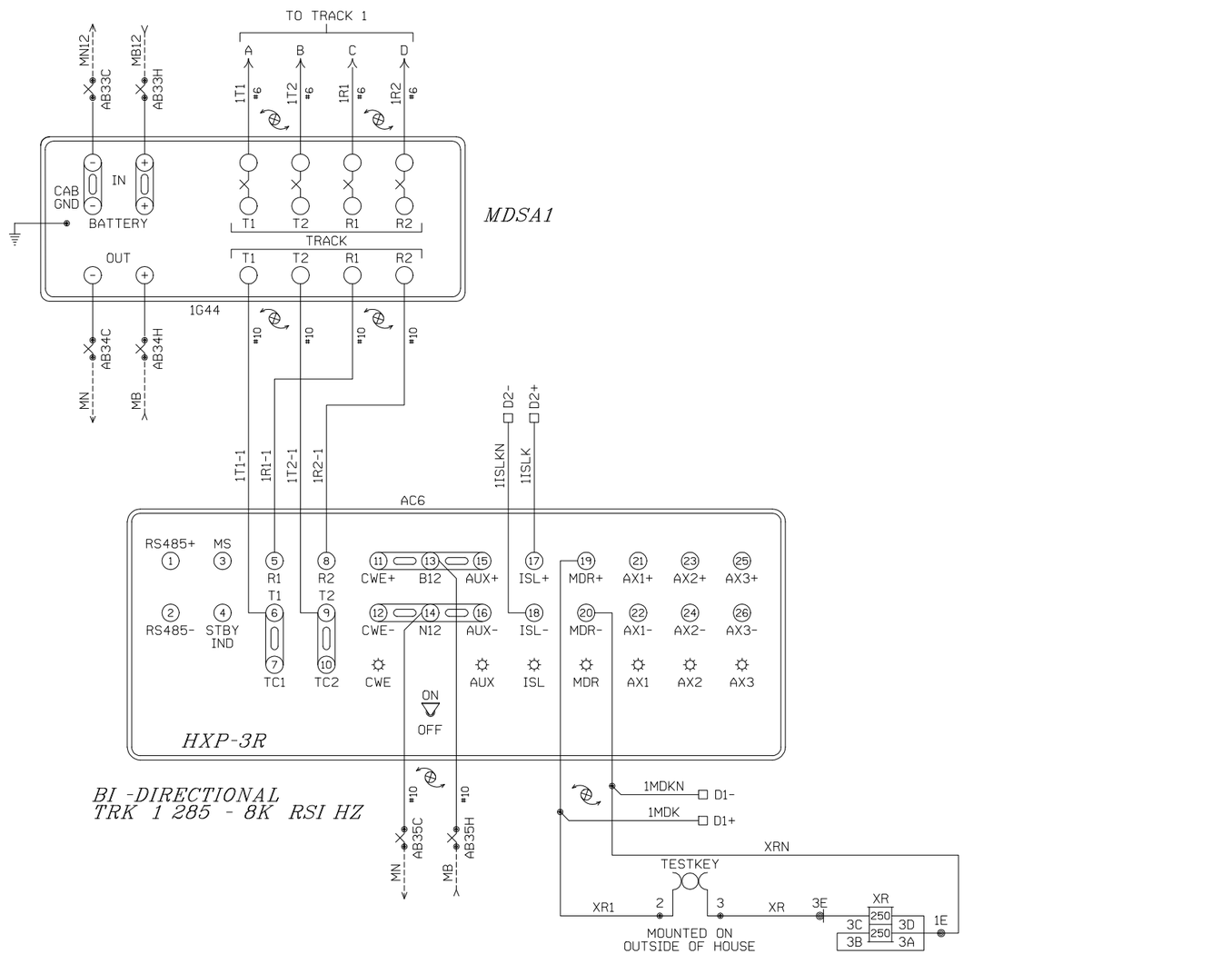

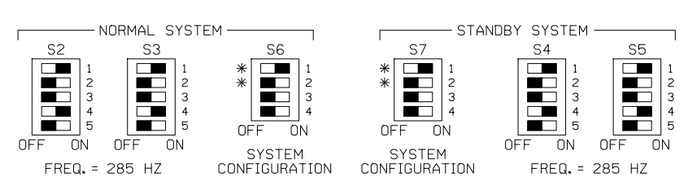

NOTES: FOR S6 AND S7

* 1.) ACTUATOR 1 SELECTS NORMAL APPROACH WHEN SET TO ON POSITION.

* 2.) WITH ACTUATOR 1 IN OFF POSITION ACTUATOR 2 SELECTS SHORT APPROACH WHEN OFF AND SELECTS VERY SHORT WHEN ON.

3.) ACTUATOR 3 OFF SELECTS HXP OPERATION.

4.) ACTUATOR 4 RESERVED FOR FUTURE USE.

ALL NEW

PROGRAM INFORMATION

PROGRAM VERSION 35.0 OR LATER

*=FIELD ADJUSTMENT TO BE MADE ACCORDING TO THE HXP-3 INSTRUCTION MANUAL AND SUPPLEMENTS.

HXP-3R ADJUSTMENTS

NO.	ADJUSTMENT NAME	TRACK 1
1	APP. LENGTH	1085'
2	WARNING TIME	33 SEC.
3	LIA	*
4	TC	*
5	MD RESTART	*

OPTION ADJUSTMENTS

NO.	ABBREVIATION	TRACK 1
1	TK-ENA	"UP"
2	TK FO	285 HZ
3	CW/MD	"C"
4	UNI-BI	"b" (BI)
5	NBS-C	*
6	CWEWT	DL (80 SEC.)
7	LOS	DL (16 SEC.)
8	IJ-LOS	DL (5 SEC.)
9	BC	*
10	P-COMP	*
11	AX1	NA
12	AX2	NA
13	AX3	NA
17	MDR-AX/OF-TK 1	DL (0)
	CJ-LOS	DL (0)
	PJ-DET	DL (15 SEC.)
	PJ-RX	DL (15)
18	MD-TMR	DL (10 MIN.)
19	MIN-WT	DL (0)
20	FS-RX	DL (0)
	FS-TM	DL (10 MIN.)
21	POS-RX	DL (0)
	POS-TM	DL (0)
22	AR-RX	DL (0)
	AR-TM	DL (10 MIN.)
47	ATO-RX	UP
48	PF-ENA	"dn"

AX ADJUSTMENTS

NO.	ABBREVIATION	AX 1	AX 2	AX 3
1	TK-ASN	NA	NA	NA
2	OF-TK1	NA	NA	NA
3	OF-TK2	NA	NA	NA
4	WT	NA	NA	NA
5	MD-RST	NA	NA	NA
6	CW/MD	NA	NA	NA
7	CJ-LOS	NA	NA	NA
8	PJ-DET	NA	NA	NA
9	PJ-RX	NA	NA	NA
10	POS-ST	NA	NA	NA

SWITCH INFORMATION

SWITCH	TRACK 1
MASTER/SLAVE	MASTER
RSI FAULT JUMPER	0
RSI-LOS JUMPER	1
TLM W1 JUMPER	PINS 1-2
TLM W2 JUMPER	PINS 1-2
TLM W3 JUMPER	PINS 2-3
MINUTE TIMEOUT	5 MIN
CW/MD	CW
STANDBY/AUTO/NORMAL	AUTO

NOTE: DL= DEFAULT LEVEL
NA= NON APPLICABLE

BURLINGTON NORTHERN SANTA FE RAILWAY

HXP-3R TRACK CIRCUITS
ROOSEVELT ROAD WEST CHICAGO, IL.

DESIGNED 07-23-07
INSTALL XING-MP 10.69
DSD/MAD SEQ.# 36434

LS 0065 | MP 10.69 | SH 02 OF 13

PLAN MUST NOT BE MODIFIED WITHOUT APPROVAL OF SIGNAL ENGINEERING

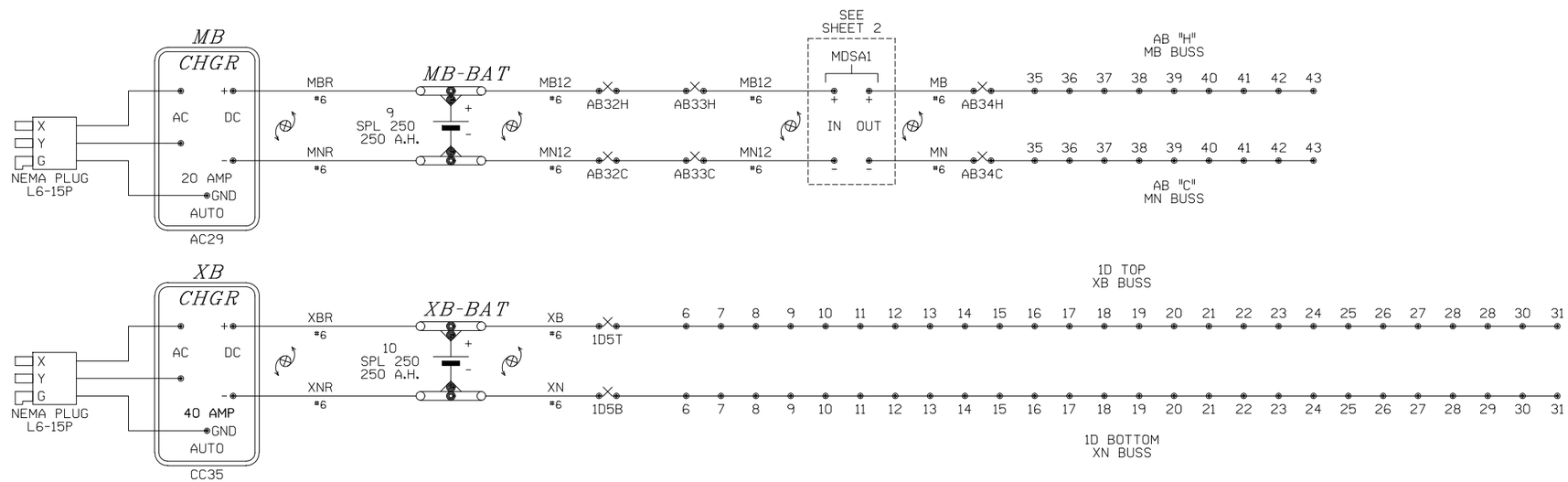

ALL NEW

DESIGNED 07-23-07
INSTALL XING-MP 10.69
DSD/MAD SEQ.# 36434

BURLINGTON NORTHERN SANTA FE RAILWAY

BATTERY CIRCUITS
ROOSEVELT ROAD WEST CHICAGO, IL.

LS 0065 | MP 10.69 | SH 03 OF 13

PLAN MUST NOT BE MODIFIED WITHOUT APPROVAL OF SIGNAL ENGINEERING

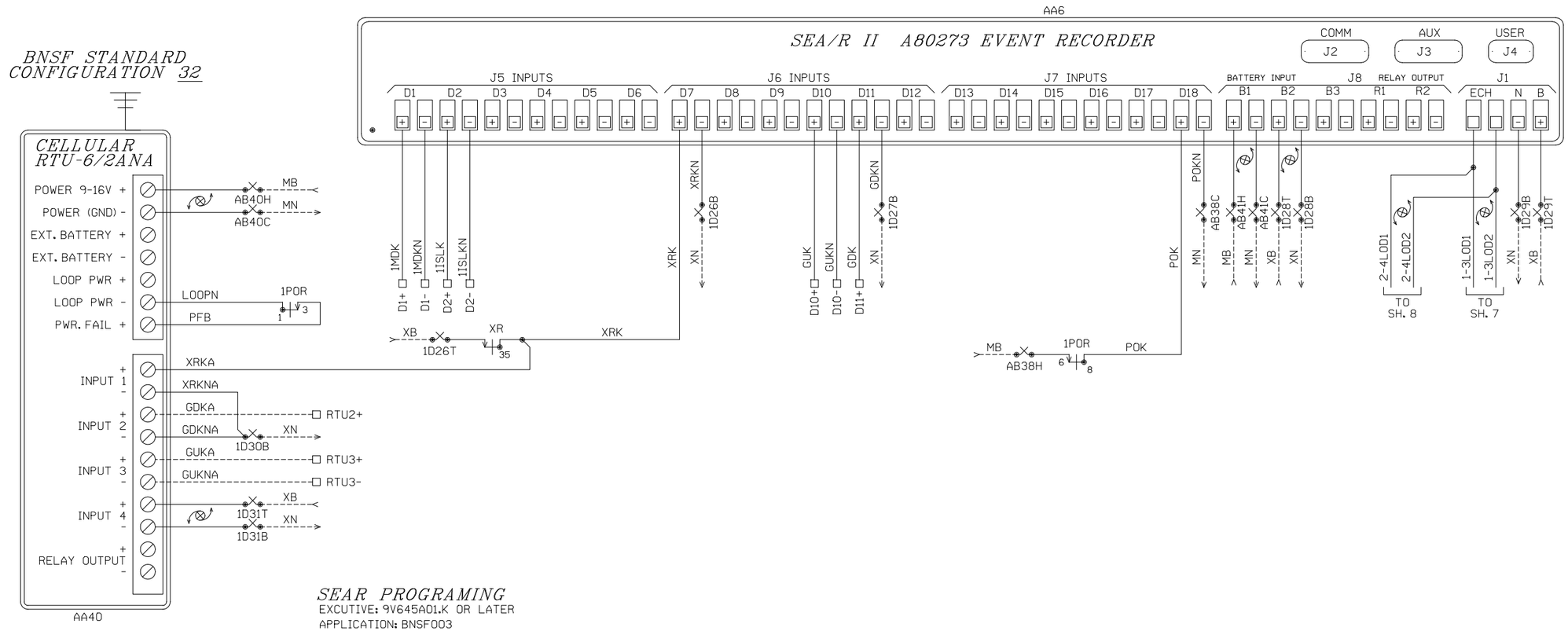

SEAR PROGRAMING

EXCUTIVE: 9V645A01.K OR LATER
APPLICATION: BNSF003

STAGE 1 SETUP MENU	
AUTO DST ADJUST	YES
TIME ZONE	(FIELD ADJ.)
SITE NAME	ROOSEVELT ROAD
MILEPOST	10.69
DOT NUMBER	069710G
TESTER TYPE	CROSSING
DATE FORMAT	MM/DD/YYYY
TEMP. FORMAT	FAHRENHEIT
SITE TYPE	NO COMM.
SITE ATCS ADDR.	7.022.XXX.XXX.99.01
USER BAUD	57600
USER DATA BITS	8 (DL)
USER PARITY	NONE (DL)
USER STOP BITS	1 (DL)
USER FLOW CONTROL	NONE (DL)
AUX BAUD	9600 (DL)
AUX DATA BITS	8 (DL)
AUX PARITY	NONE (DL)
AUX STOP BITS	1 (DL)
AUX FLOW CONTROL	NONE (DL)
COMM BAUD	9600 (DL)
COMM DATA BITS	8 (DL)
COMM PARITY	NONE (DL)
COMM STOP BITS	1 (DL)
COMM FLOW CONTROL	NONE (DL)

RESET NAME/MODULES - SELECT YES TO CLEAR ALL TAG NAMES AND MODULES FROM MEMORY, OTHERWISE SELECT NO.

STAGE 2 SETUP MENU	
RESET NAME/MODULES	YES (NOTE)
LAMP/GATE OPERATION	NORMAL
NUMBER OF TRACKS	1
NUMBER ON MD INPUTS	1
NUMBER OF ISL INPUTS	1
CALCULATE WT ISL 1	YES
CALCULATE WT ISL 2	N/A
CALCULATE WT ISL 3	N/A
CALCULATE WT ISL 4	N/A
CALCULATE WT ISL 5	N/A
CALCULATE WT ISL 6	N/A
GATE (1/1A) INPUT	YES
GATE (2/2A) INPUT	NO
GATE (3/1B) INPUT	NO
GATE (4/2B) INPUT	NO
GATE (5/1C) INPUT	NO
GATE (6/2C) INPUT	NO
GATE 1 CONTROLLED BY	XRK
GATE 2 CONTROLLED BY	N/A
GATE 3 CONTROLLED BY	N/A
GATE 4 CONTROLLED BY	N/A
GATE 5 CONTROLLED BY	N/A
GATE 6 CONTROLLED BY	N/A
GATE 3A INPUT	NO
GATE 4A INPUT	NO
GATE 3B INPUT	NO
GATE 4B INPUT	NO
GATE (1/1A) BELL SENSOR	NO
GATE (2/2A) BELL SENSOR	N/A

STAGE 2 SETUP MENU	
GATE (3/1B) BELL SENSOR	N/A
GATE (4/2B) BELL SENSOR	N/A
GATE (5/1C) BELL SENSOR	N/A
GATE (6/2C) BELL SENSOR	N/A
GATE 3A BELL SENSOR	N/A
GATE 4A BELL SENSOR	N/A
GATE 3B BELL SENSOR	N/A
GATE 4B BELL SENSOR	N/A
VEHICLE DETECTION	NO
ILODs	2
ILOD'S HAVE WIRE WRAPS	YES
ILOD1 WIRE WRAPS	YES
ILOD2 WIRE WRAPS	YES
ILOD3 WIRE WRAPS	N/A
ILOD4 WIRE WRAPS	N/A
ILOD5 WIRE WRAPS	N/A
ILOD6 WIRE WRAPS	N/A
ILOD7 WIRE WRAPS	N/A
ILOD8 WIRE WRAPS	N/A
ILOD 1 OPERATES WITH	XRK
ILOD 2 OPERATES WITH	XRK
ILOD 3 OPERATES WITH	N/A
ILOD 4 OPERATES WITH	N/A
ILOD 5 OPERATES WITH	N/A
ILOD 6 OPERATES WITH	N/A
ILOD 7 OPERATES WITH	N/A
ILOD 8 OPERATES WITH	N/A
SSCC IIIa, IIIplus, IV	0
BATTERY BANKS	2

STAGE 2 SETUP MENU	
PREEMPTION	NO
RTU	NO
AUXILARY DIGITAL I/O	NO
AUXILARY ANALOG I/O	NO

STAGE 3 SETUP MENU	
EDIT DIGITAL INPUTS	NO (SEE NOTE)
EDIT BATTERIES	NO (SEE NOTE)
EDIT RELAYS	NO (SEE NOTE)
EDIT INDICATOR LEDS	NO (SEE NOTE)
EDIT TEST LEDS	NO (SEE NOTE)
EDIT ıLOD1(2-8) SENSOR	NO (SEE NOTE)
EDIT SSCC1 ATCS ADDR.	7.022.XXX.XXX.11.01
EDIT SSCC1 INPUTS	NO (SEE NOTE)
EDIT SSCC1 OUTPUTS	NO
EDIT SSCC2 ATCS ADDR.	7.022.XXX.XXX.12.01
EDIT SSCC2 INPUTS	NO
EDIT SSCC2 OUTPUTS	NO
EDIT SSCC3 ATCS ADDR.	N/A
EDIT SSCC3 INPUTS	N/A
EDIT SSCC3 OUTPUTS	N/A
EDIT SSCC4 ATCS ADDR.	N/A
EDIT SSCC4 INPUTS	N/A
EDIT SSCC4 OUTPUTS	N/A
EDIT DIGITAL INPUTS	NO (SEE NOTE)
EDIT DIGITAL OUTPUTS	NO (SEE NOTE)

EDIT USING HYPERTERMINAL, ANSWER "YES" TO EDIT USING THE CONTROL PANEL

MODULE CONFIGURATION INPUT TABLE				
INPUT	DIGITAL	BATTERY		
1	1MDK	MB		
2	1ISLK	XB		
3				
4				
5				
6				
7	XRK			
8				
9				
10	1GUK			
11	1GDK			
12				
13				
14				
15				
16				
17				
18	POK			

NOTE:
ALL JUMPERS ON THE SEA/R RECORDER AND RTU TO BE #20 AWG.

CATEGORY 5E LAN CABLE TO BE USED FOR ALL LAN CONNECTIONS.

ALL NEW

DESIGNED 07-23-07
INSTALL XING-MP 10.69
DSD/MAD SEQ.# 36434

BURLINGTON NORTHERN SANTA FE RAILWAY

RECORDER CIRCUITS
ROOSEVELT ROAD WEST CHICAGO, IL.

LS 0065 | MP 10.69 | SH 04 OF 13

PLAN MUST NOT BE MODIFIED WITHOUT APPROVAL OF SIGNAL ENGINEERING

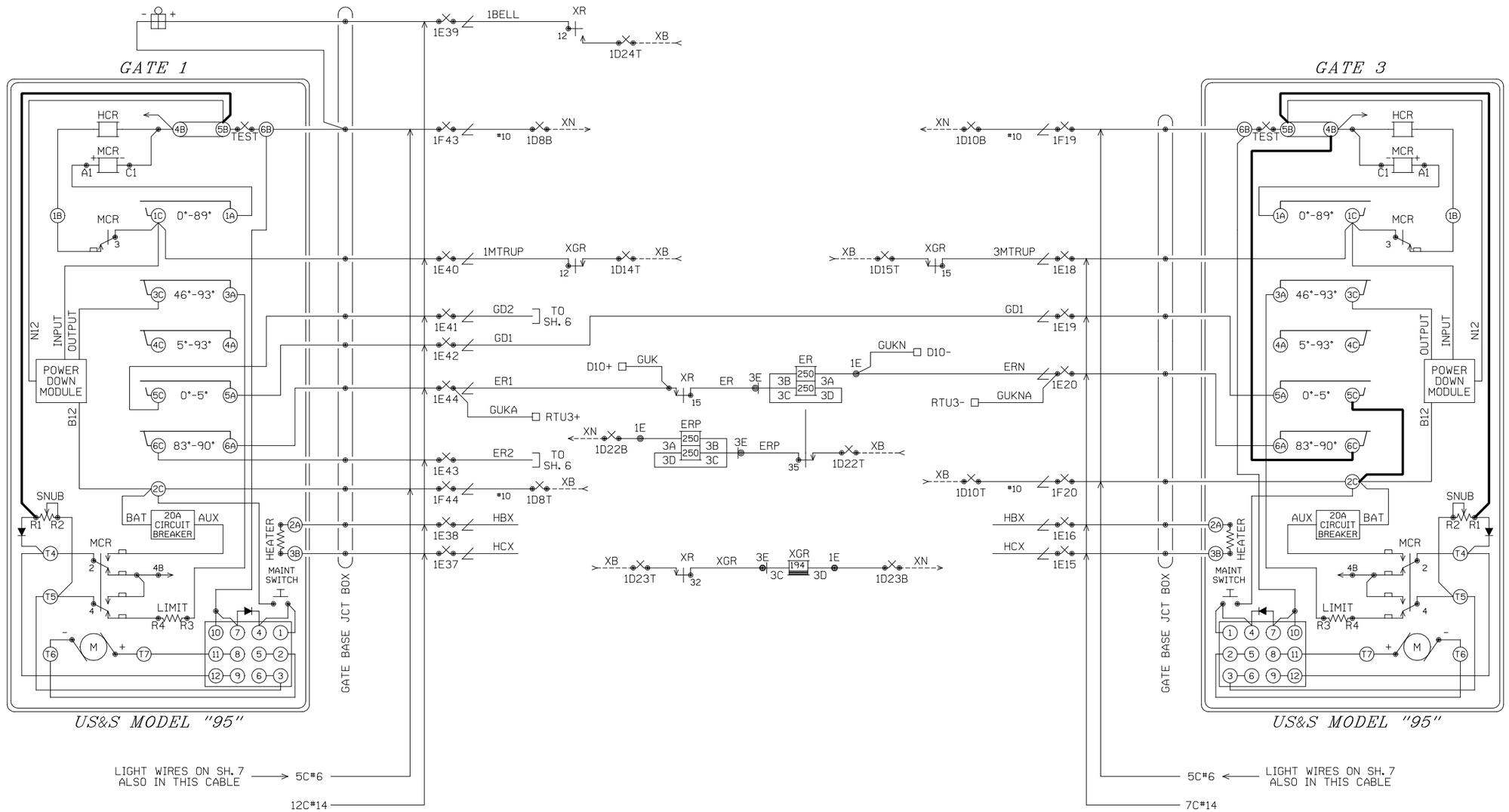

NOTE:
ADD JUMPERS IN GATE SHOWN IN BOLD.

ALL NEW

DESIGNED 07-23-07
INSTALL XING-MP 10.69
DSD/MAD SEQ.# 36434

BURLINGTON NORTHERN SANTA FE RAILWAY

GATE CIRCUIT PLAN
ROOSEVELT ROAD WEST CHICAGO, IL.

LS 0065 | MP 10.69 | SH 05 OF 13

PLAN MUST NOT BE MODIFIED WITHOUT APPROVAL OF SIGNAL ENGINEERING

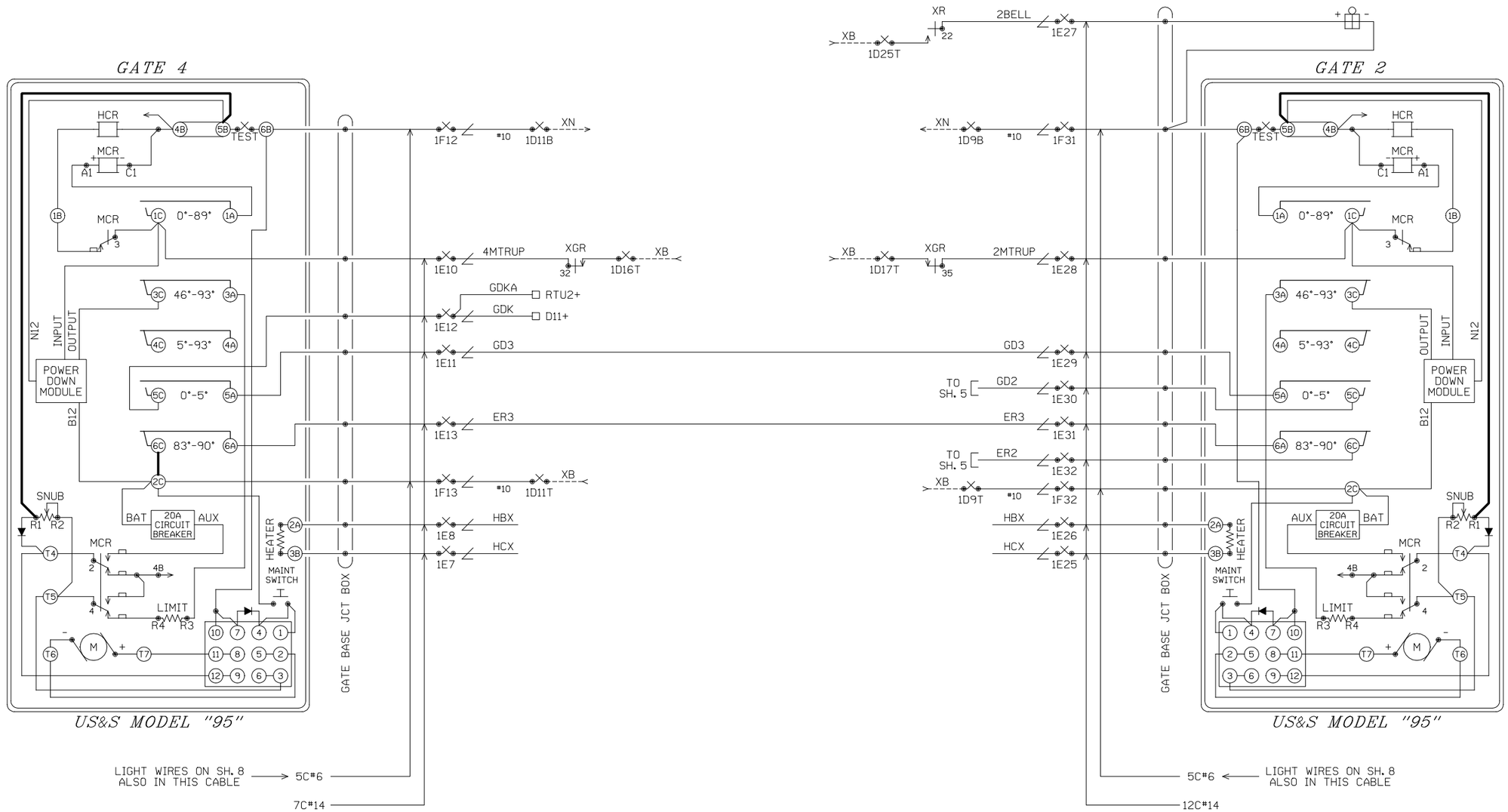

NOTE:
ADD JUMPERS IN GATE SHOWN IN BOLD.

ALL NEW

DESIGNED 07-23-07
INSTALL XING-MP 10.69
DSD/MAD SEQ.# 36434

BURLINGTON NORTHERN SANTA FE RAILWAY

GATE CIRCUIT PLAN
ROOSEVELT ROAD WEST CHICAGO, IL.

LS 0065 | MP 10.69 | SH 06 OF 13

PLAN MUST NOT BE MODIFIED WITHOUT APPROVAL OF SIGNAL ENGINEERING

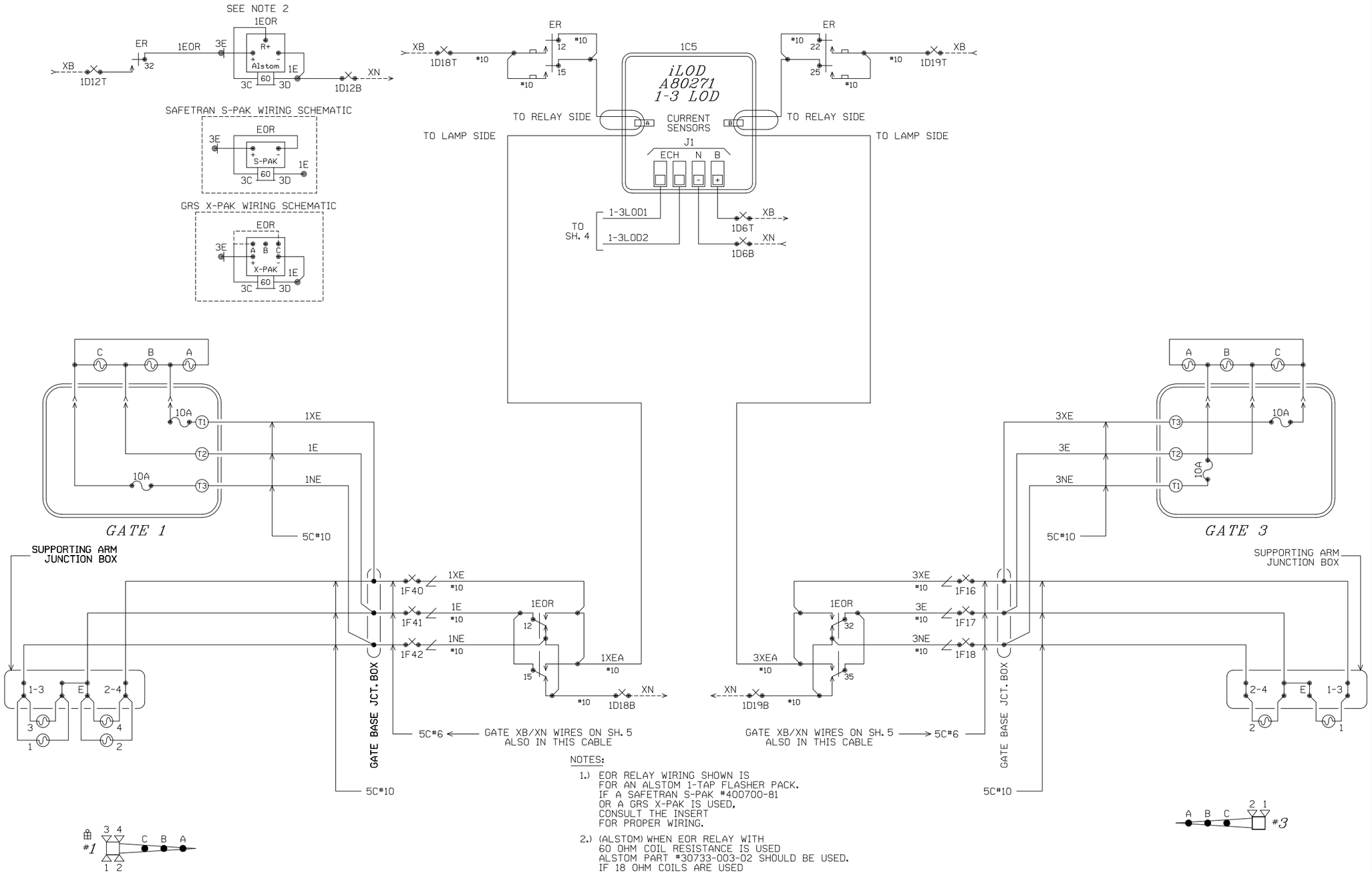

NOTES:

1.) EOR RELAY WIRING SHOWN IS FOR AN ALSTOM 1-TAP FLASHER PACK. IF A SAFETRAN S-PAK #400700-81 OR A GRS X-PAK IS USED, CONSULT THE INSERT FOR PROPER WIRING.

2.) (ALSTOM) WHEN EOR RELAY WITH 60 OHM COIL RESISTANCE IS USED ALSTOM PART #30733-003-02 SHOULD BE USED. IF 18 OHM COILS ARE USED ALSTOM PART #30733-003-04 SHOULD BE USED.

3.) (X-PAK) WHEN EOR RELAY WITH 60 OHM COIL RESISTANCE IS USED CONNECT JUMPER FROM 3C TO "A". IF 18 OHM COILS ARE USED CONNECT JUMPER FROM 3C TO "C".

4.) (S-PAK) DO NOT USE S-PAK WITH 18 OHM COILS

ALL NEW

DESIGNED 07-23-07
INSTALL XING-MP 10.69
DSD/MAD SEQ.# 36434

BURLINGTON NORTHERN SANTA FE RAILWAY

FLASHER CIRCUIT PLAN
ROOSEVELT ROAD WEST CHICAGO, IL.

LS 0065	MP 10.69	SH 07 OF 13